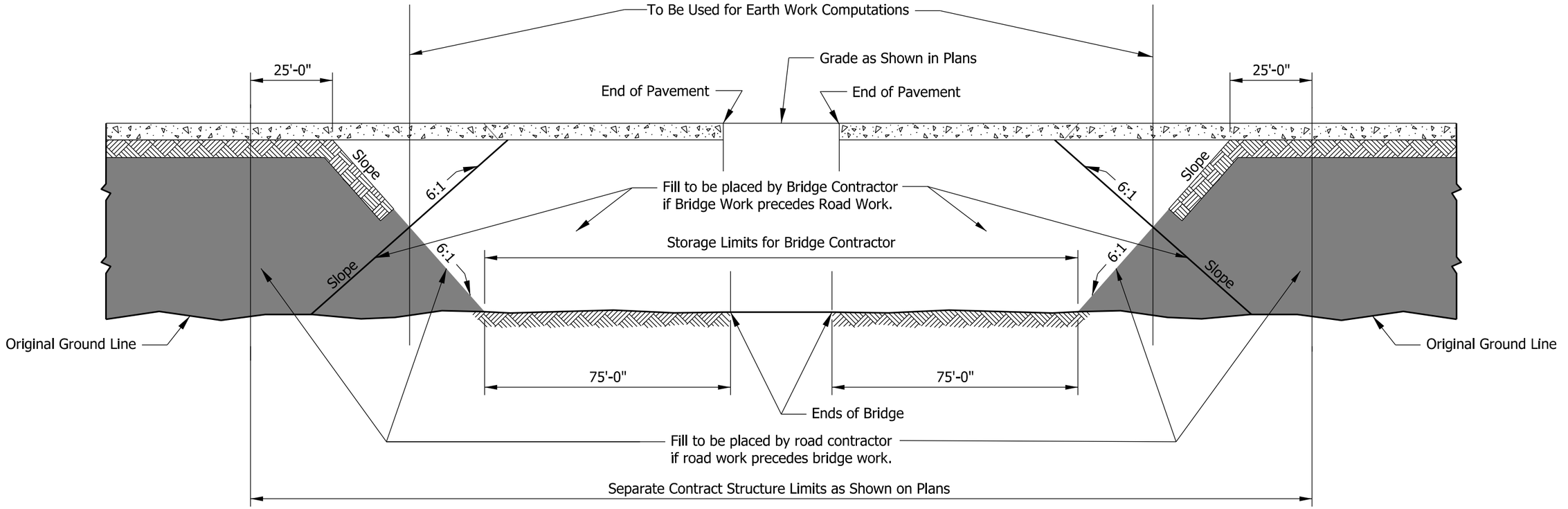

METHOD FOR DETERMINING QUANTITIES WITHIN STRUCTURE LIMITS

INDIANA DEPARTMENT OF TRANSPORTATION

ROAD & BRIDGE
CONTRACT LIMITS

SEPTEMBER 2000

STANDARD DRAWING NO. E 105-RBCL-01

ANTHONY L. UREMOVICH REGISTERED No. 18095 STATE OF INDIANA PROFESSIONAL ENGINEER

/s/ Anthony L. Uremovich 09/01/00
DESIGN STANDARDS ENGINEER DATE

/s/ Firooz Zandi 09/01/00
CHIEF ENGINEER DATE

INDEX

SHEET NO.	SUBJECT
1	Temporary Erosion Control Index Sheet
2	Temporary Inlet Protection, Filter Sock
3	Temporary Inlet Protection, Gravel Ring
4	Temporary Inlet Protection, Filter Bag Insert
5	Temporary Curb Inlet Protection
6	Temporary Check Dam, Revetment Riprap
7	Temporary Check Dam, Traversable, Low Profile
8	Temporary Check Dam, Traversable
9	Temporary Sediment Trap
10	Perimeter Protection, Filter Sock
11	Perimeter Protection, Silt Fence
12	Temporary Erosion Control Perimeter Construction Entrance

INDIANA DEPARTMENT OF TRANSPORTATION

TEMPORARY EROSION CONTROL INDEX SHEET

SEPTEMBER 2019

STANDARD DRAWING NO. E 205-TECD-01

ELIZABETH W. PHILLIPS
REGISTERED
No. 10200124
STATE OF INDIANA
PROFESSIONAL ENGINEER

5/2/2019
DESIGN STANDARDS ENGINEER DATE

5/31/2019
CHIEF ENGINEER DATE

INLET PROTECTION
SOIL APPLICATIONS

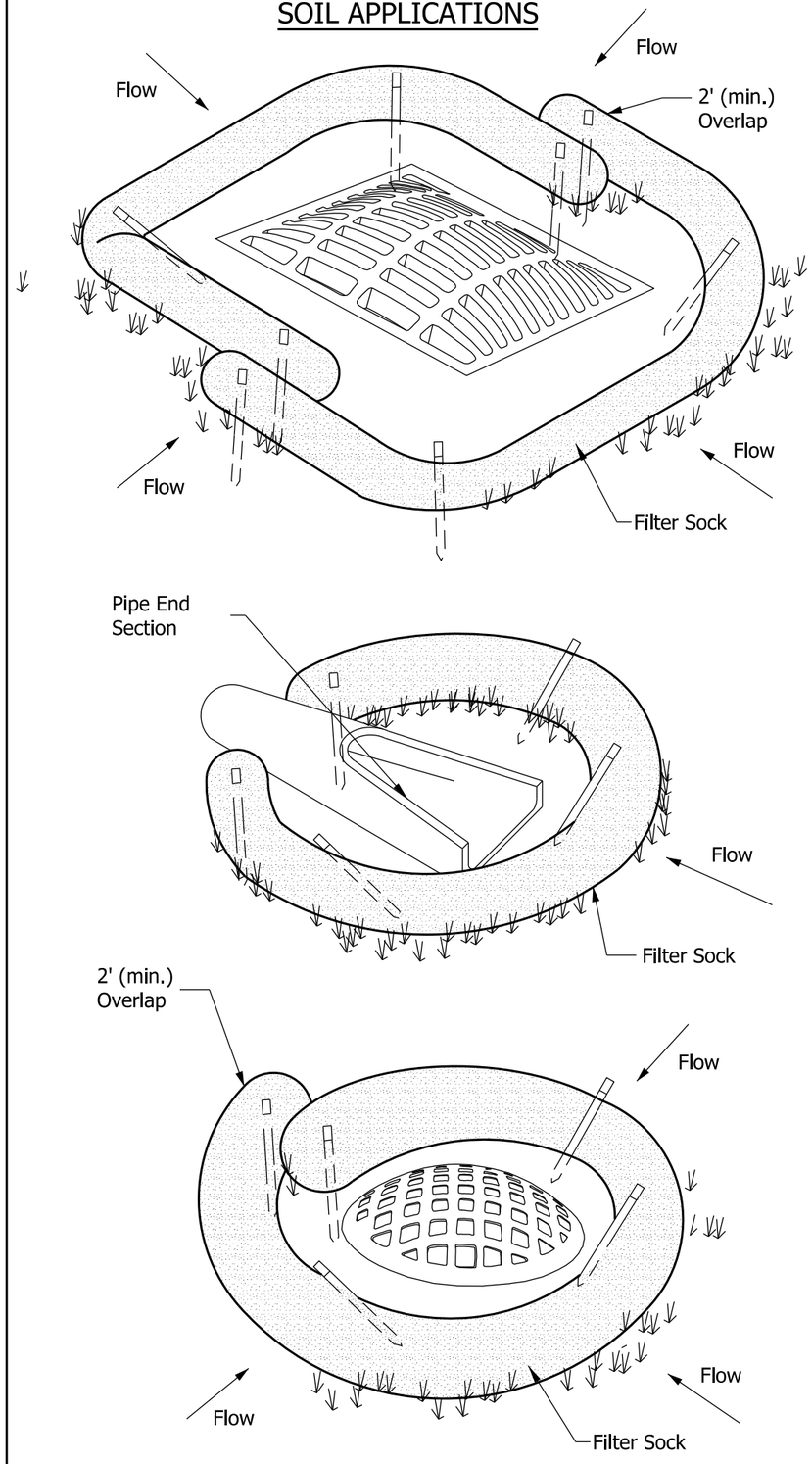

INLET PROTECTION
PAVEMENT APPLICATIONS

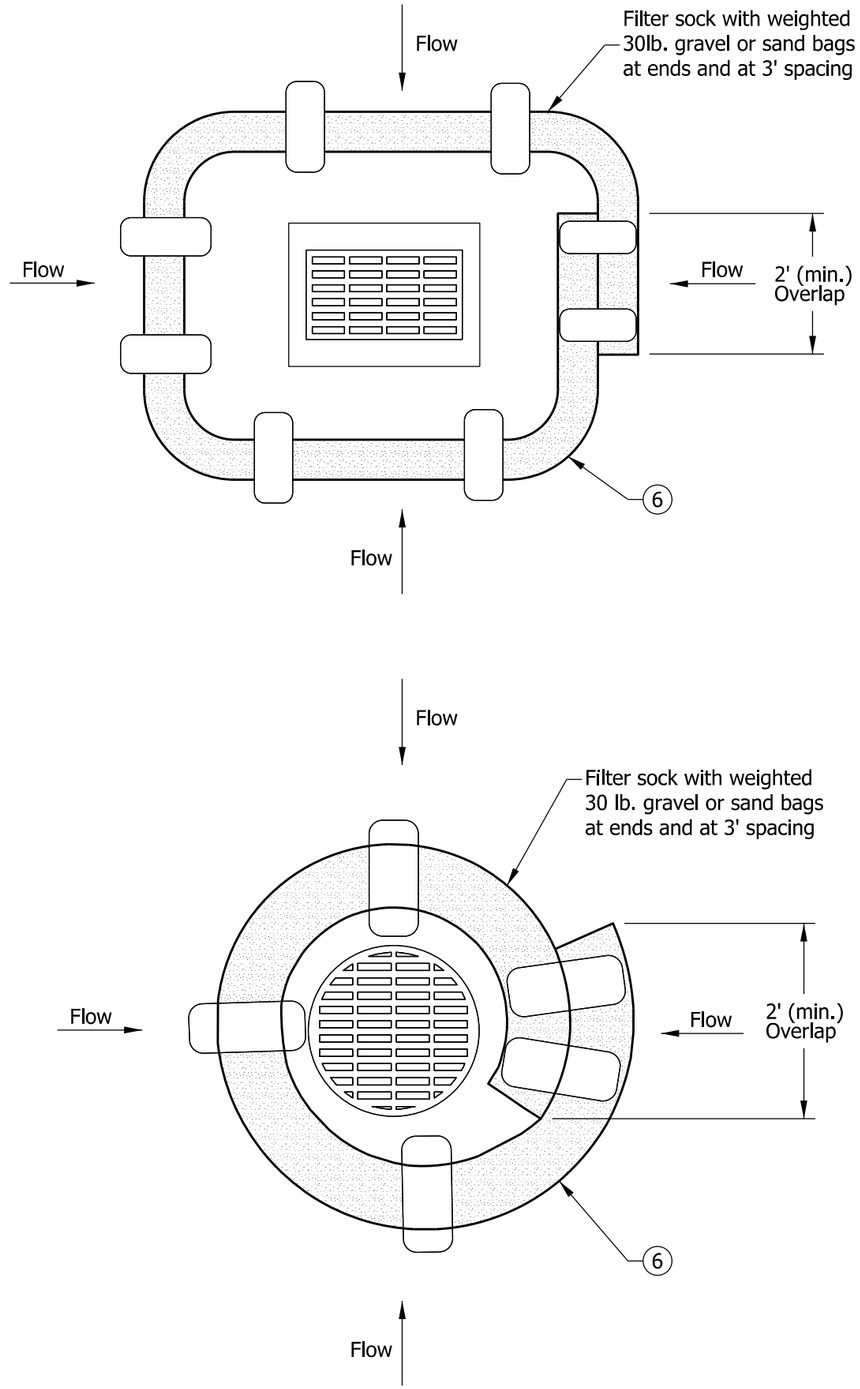

NOTES:

1. Fiber roll may be substituted for filter sock.
2. Filter sock shall be secured to prevent movement and undercutting as shown or in accordance with the manufacturer's instructions. See Standard Drawing E 205-TECD-10 for securing methods.
3. Inlet protection shall be inspected, at a minimum once every seven days and after each storm event. Sediment shall be removed when 1/3 of the filter sock depth has been filled or as directed.
4. Sediment and gravel deposited on roadways shall be removed once identified after each storm event.
5. Inlet protection shall be removed after the surrounding area becomes stable.
6. Inlet protection shall be used within a lane or shoulder only when closed to traffic. Inlet protection shall not cause water to encroach upon a lane open to traffic.

INDIANA DEPARTMENT OF TRANSPORTATION

TEMPORARY INLET PROTECTION, FILTER SOCK

SEPTEMBER 2019

STANDARD DRAWING NO. E 205-TECD-02

ELIZABETH W. PHILLIPS
REGISTERED
No. 10200124
STATE OF INDIANA
PROFESSIONAL ENGINEER

5/2/2019
DESIGN STANDARDS ENGINEER — DATE

5/31/2019
CHIEF ENGINEER — DATE

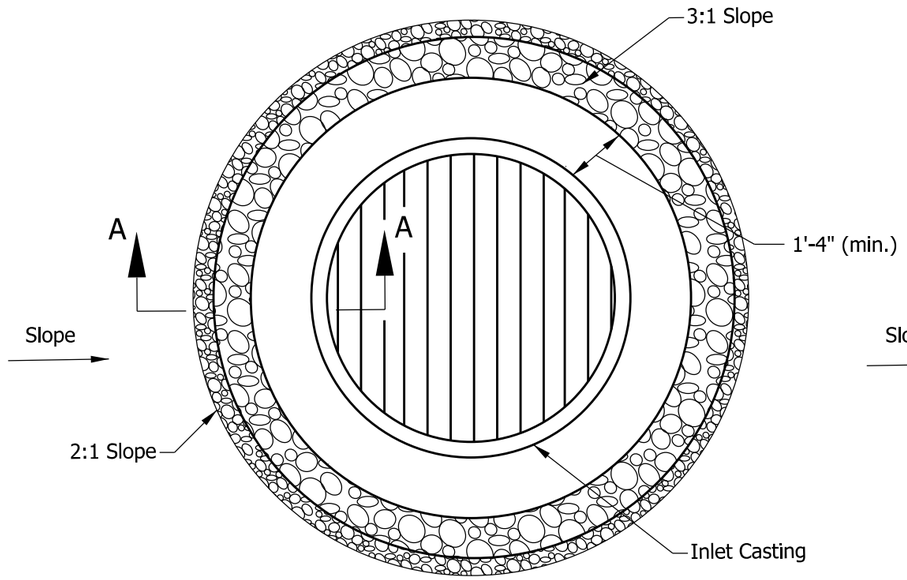

PLAN VIEW

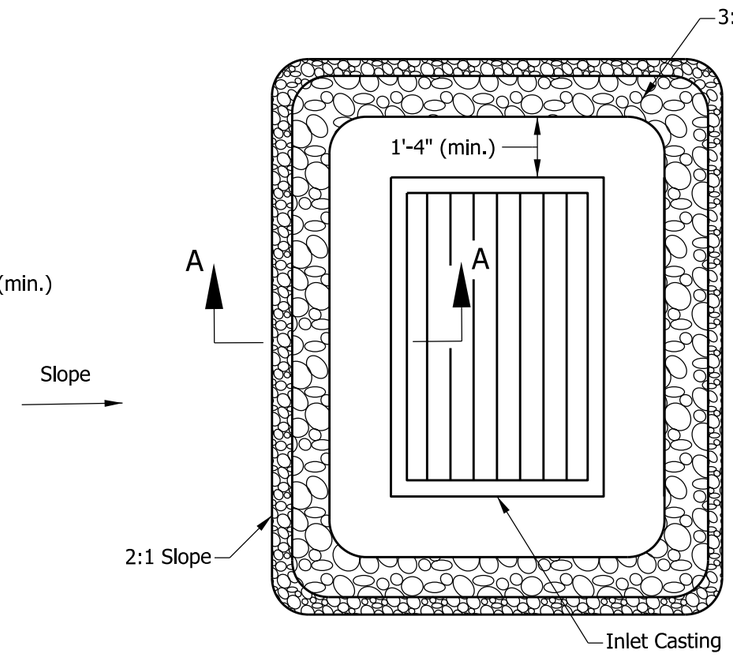

PLAN VIEW

NOTES:

1. H = h + 0.25, ft
2. Weight of coarse aggregate #2, Tons:
   $(6.28/27)(0.67^2 + 2.5H)(1 + 3H + \frac{1}{2}$ inlet width$)(0.6)$
3. Weight of coarse aggregate #8, Tons:
   $(6.28/27)(H)(1 + 4H + \frac{1}{2}$ inlet width$)(0.6)$

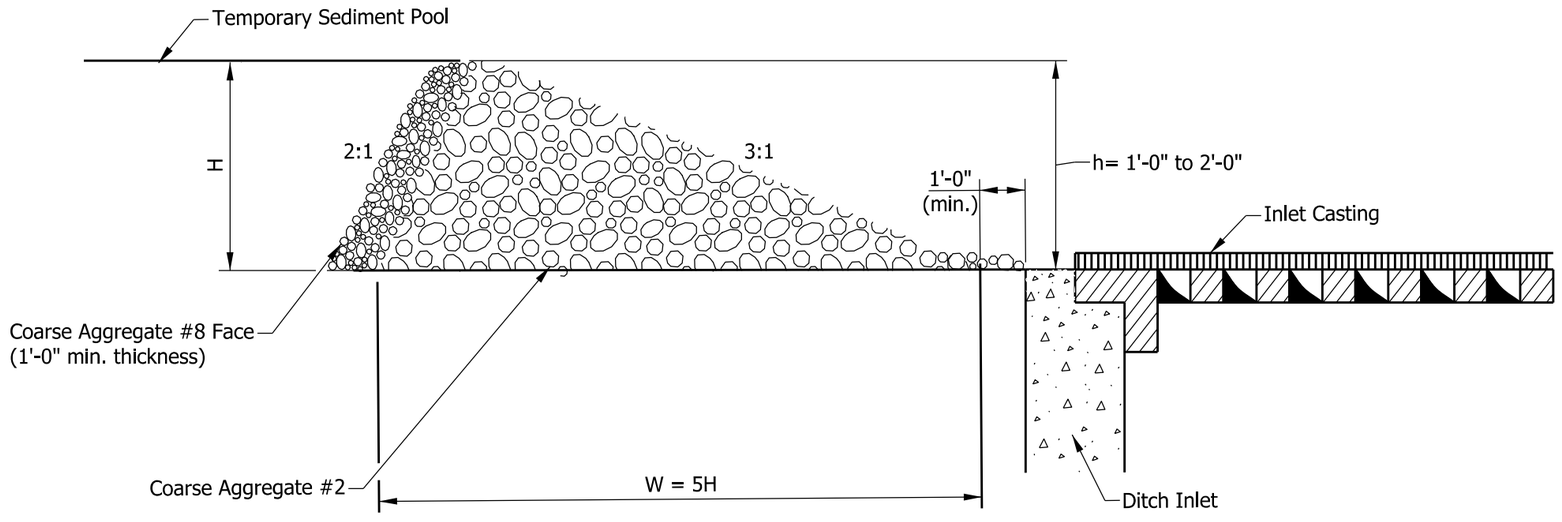

SECTION A-A

INDIANA DEPARTMENT OF TRANSPORTATION

TEMPORARY INLET
PROTECTION, GRAVEL RING

SEPTEMBER 2019

STANDARD DRAWING NO. E 205-TECD-03

ELIZABETH W. PHILLIPS
REGISTERED
No. 10200124
STATE OF INDIANA
PROFESSIONAL ENGINEER

5/2/2019
DESIGN STANDARDS ENGINEER DATE

5/31/2019
CHIEF ENGINEER DATE

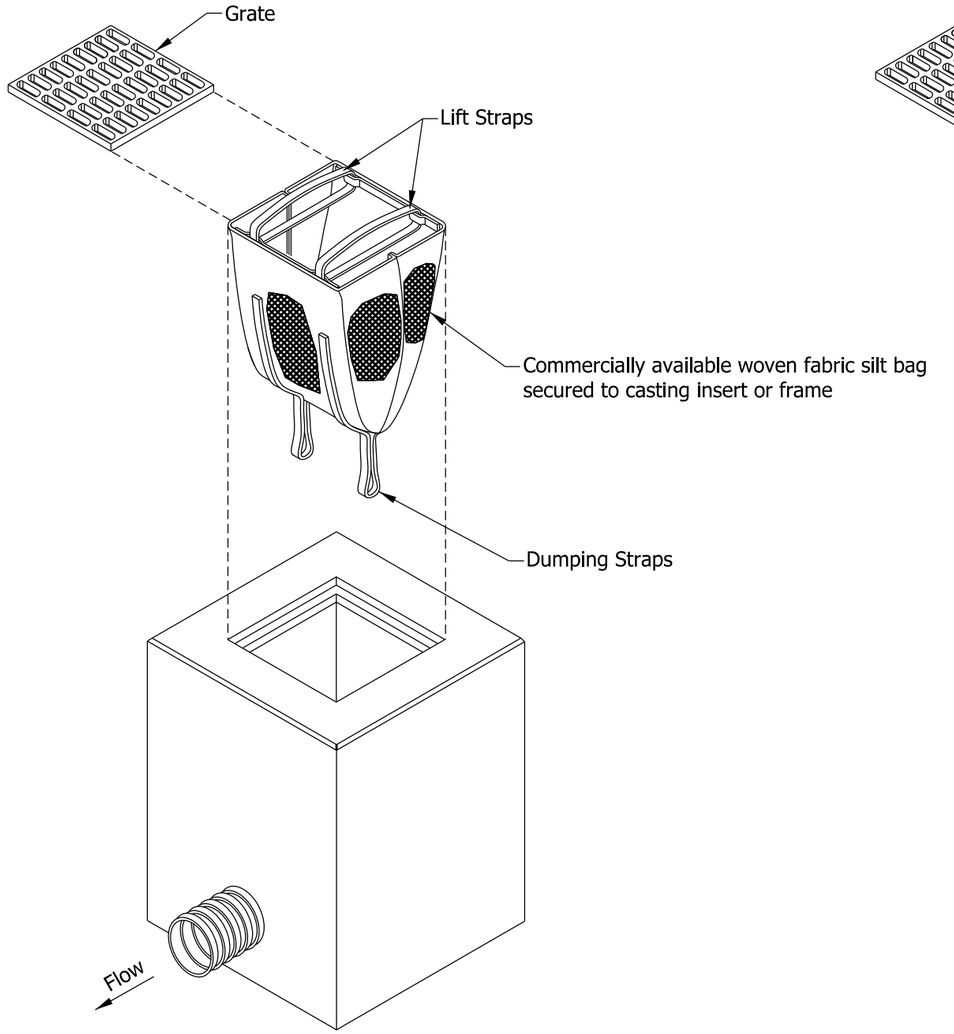

MANUFACTURED

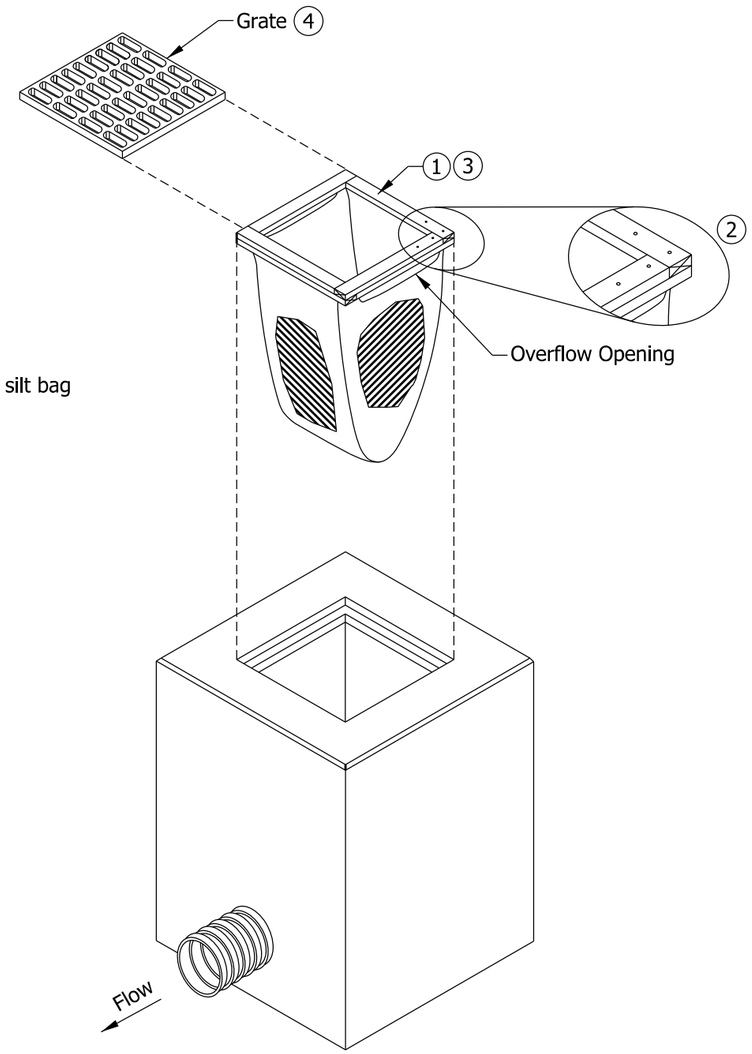

BUILT IN FIELD

NOTES:

1. Frame opening size to match inlet opening.
2. Geotextile bag shall be fabricated from a piece of geotextile 2 times the opening size pushed through the opening to form an overflow opening. Secure by nails.
3. Frame with bag to be placed over inlet opening.
4. Bag frame shall be secured in place by weight of inlet grate. Grate may be rotated 45 degrees to the bag's frame.

INDIANA DEPARTMENT OF TRANSPORTATION

TEMPORARY INLET PROTECTION, FILTER BAG INSERT

SEPTEMBER 2019

STANDARD DRAWING NO. E 205-TECD-04

ELIZABETH W. PHILLIPS
REGISTERED
No. 10200124
STATE OF INDIANA
PROFESSIONAL ENGINEER

5/2/2019
DESIGN STANDARDS ENGINEER DATE

5/31/2019
CHIEF ENGINEER DATE

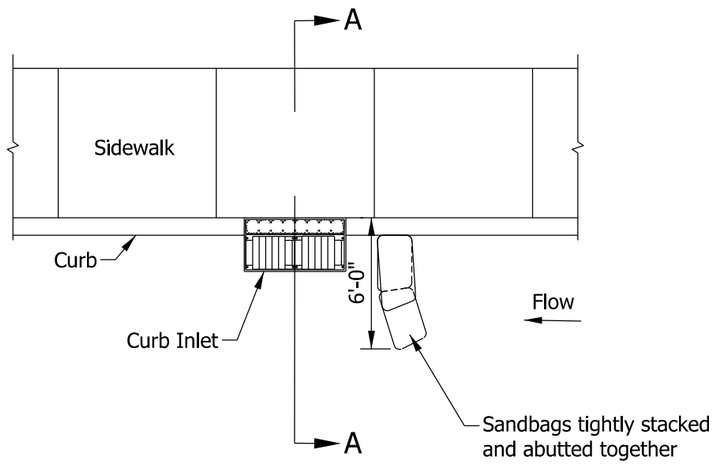

SANDBAG
SINGLE DIRECTION FLOW

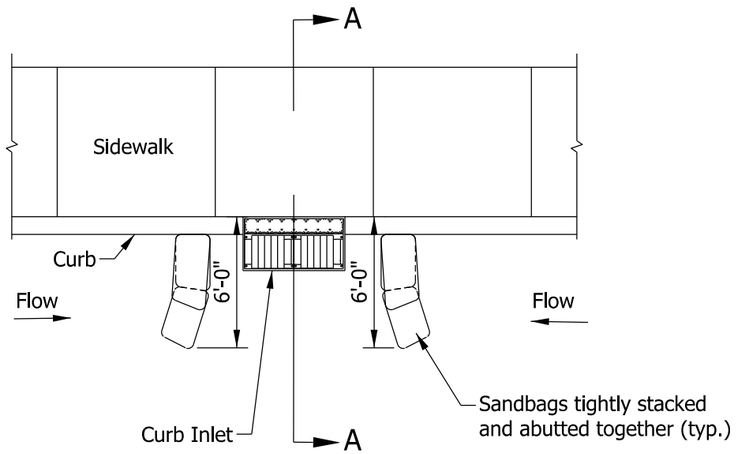

SANDBAG
DUAL DIRECTION FLOW

NOTES:

1. Curb inlet protection shall be used within a lane or shoulder only when closed to traffic. Curb inlet protection shall not cause water to encroach upon a lane open to traffic.

(2) May be used in conjunction with drain inlet protection as a best management practice (BMP) in combination with bag or drop inlet protection inserts.

(3) Inlet protection shall be used within a lane or shoulder only when closed to traffic. Inlet protection shall not cause water to encroach upon a lane open to traffic.

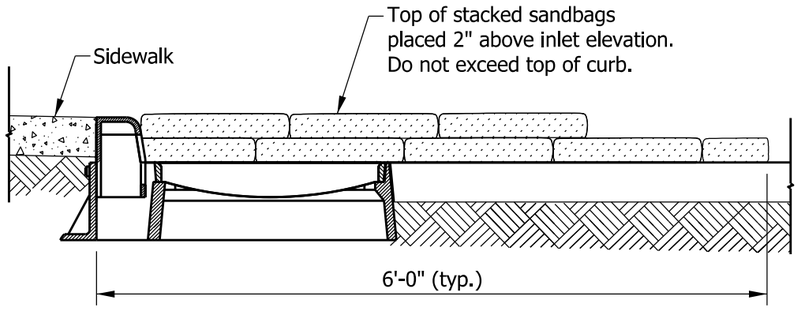

SECTION A-A

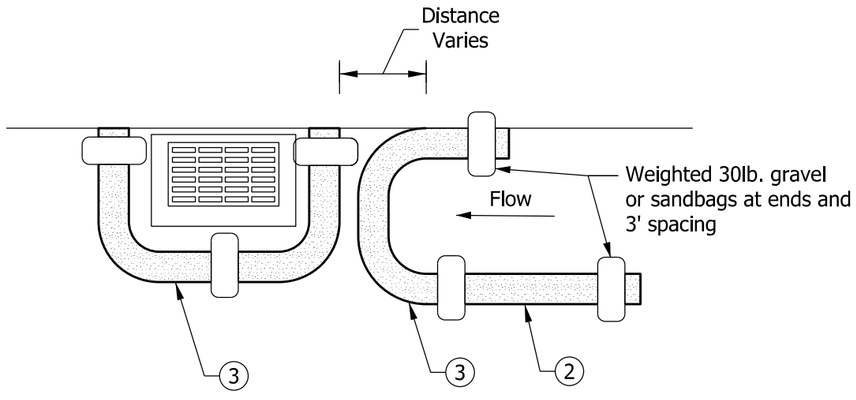

FILTER SOCK SINGLE OR DUAL
DIRECTION FLOW

INDIANA DEPARTMENT OF TRANSPORTATION

TEMPORARY CURB INLET PROTECTION

SEPTEMBER 2019

STANDARD DRAWING NO. E 205-TECD-05

ELIZABETH W. PHILLIPS
REGISTERED
No. 10200124
STATE OF INDIANA
PROFESSIONAL ENGINEER

5/2/2019
DESIGN STANDARDS ENGINEER DATE

5/31/2019
CHIEF ENGINEER DATE

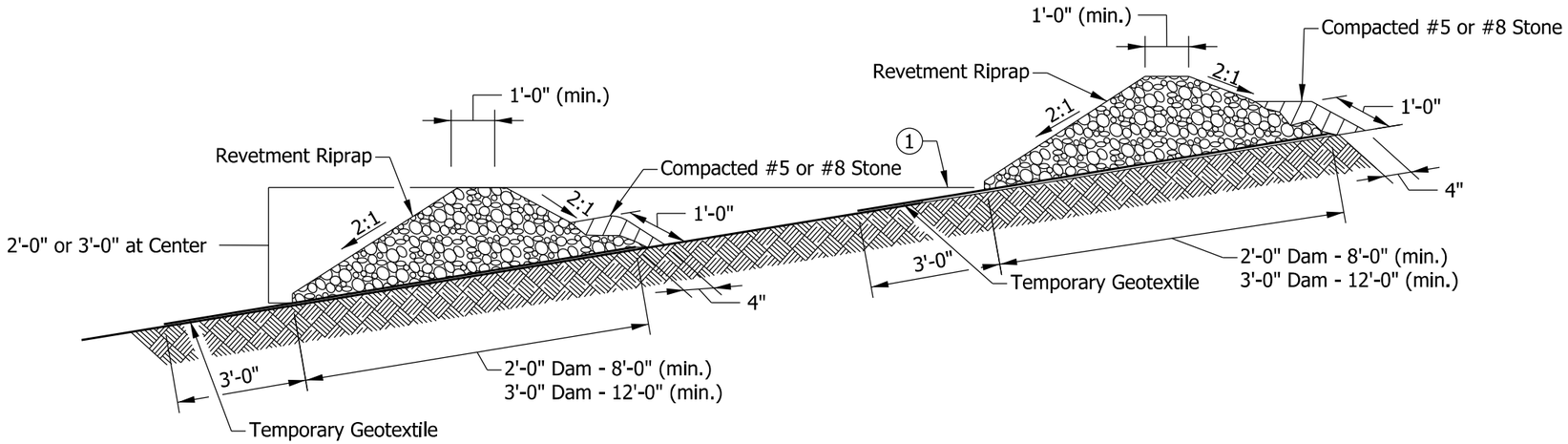

ELEVATION

NOTE:

1. Riprap check dams shall be spaced such that the top of the downstream check dam is at the same elevations as the toe of the adjacent upstream check dam.

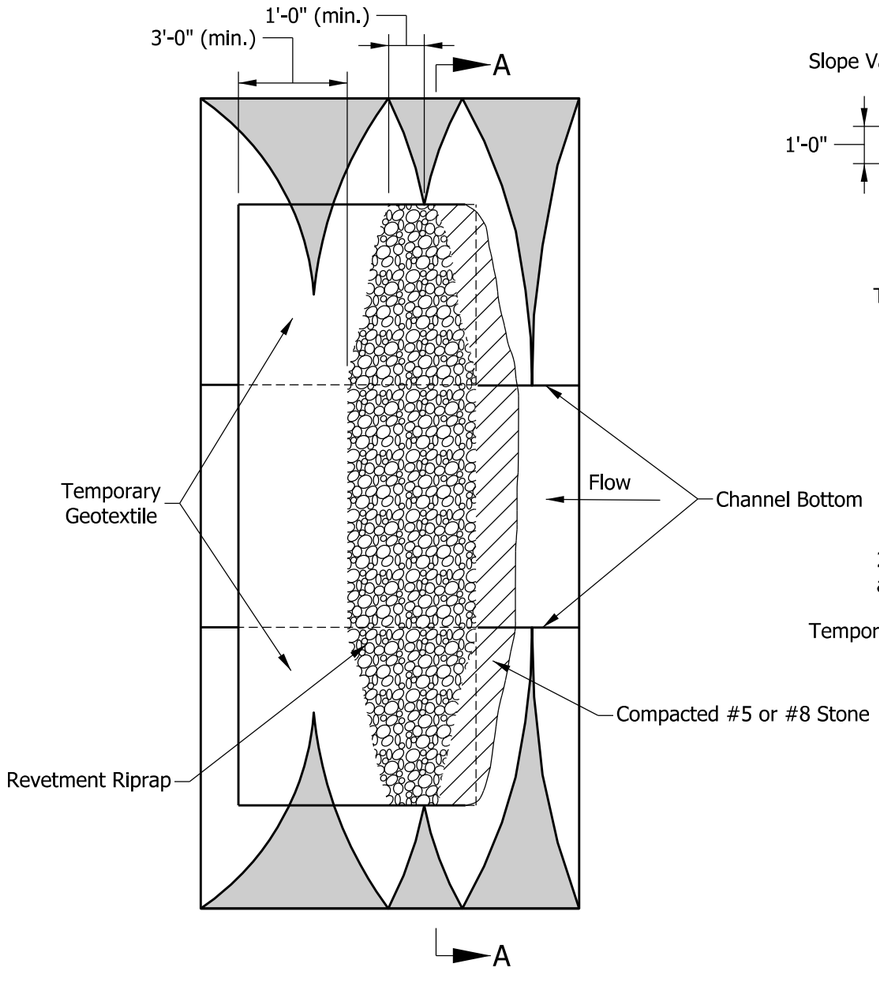

PLAN

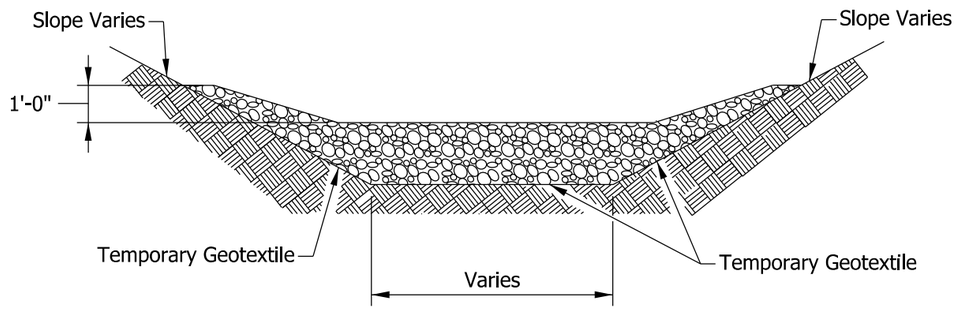

SECTION A-A

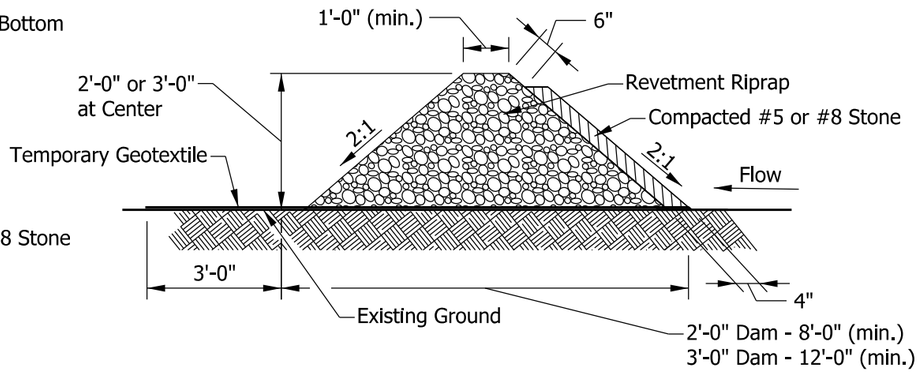

MODIFIED CHECK DAM

INDIANA DEPARTMENT OF TRANSPORTATION

TEMPORARY CHECK DAM,
REVETMENT RIPRAP

SEPTEMBER 2019

STANDARD DRAWING NO. E 205-TECD-06

ELIZABETH W. PHILLIPS
REGISTERED
No. 10200124
STATE OF INDIANA
PROFESSIONAL ENGINEER

5/2/2019
DESIGN STANDARDS ENGINEER DATE

5/31/2019
CHIEF ENGINEER DATE

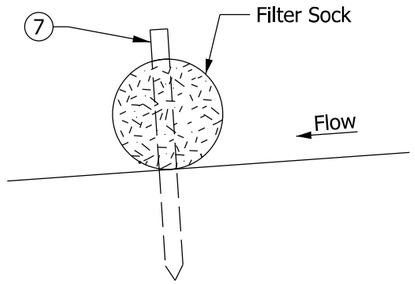

STAKE THROUGH SECURING METHOD

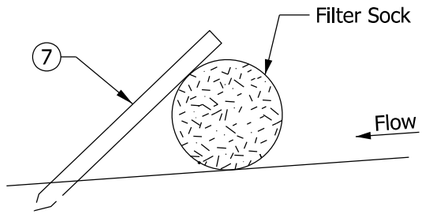

SLANTED STAKE SECURING METHOD

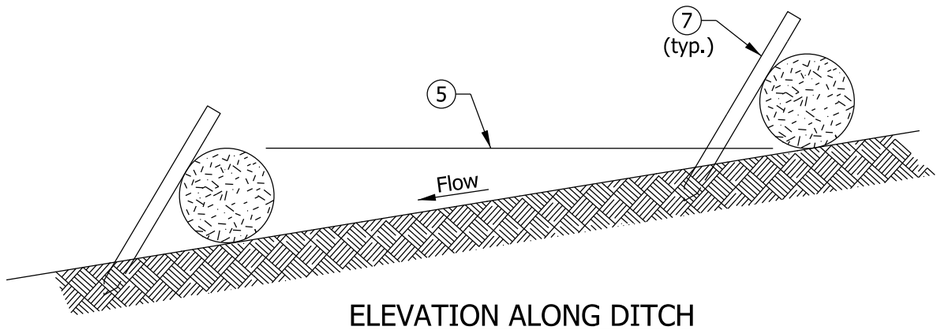

ELEVATION ALONG DITCH

NOTES:

1. Fiber roll may be substituted for filter sock.
2. Check dams shall be placed perpendicular to the flow of water.
3. Check dam ends shall be positioned as shown such that storm water flows over the weir low point and does not flow around the ends.
4. Check dams shall remain in place until all upstream areas become stable.

(5) Check dams shall be spaced such that the top of the downstream check dam is at the same elevation as the toe of the adjacent upstream check dam.

6. Filter sock shall be shall be secured as shown or in accordance with the manufacturer's instructions.

(7) Stake angle and length shall be sufficient to wedge filter sock to the ground to prevent movement and undercutting.

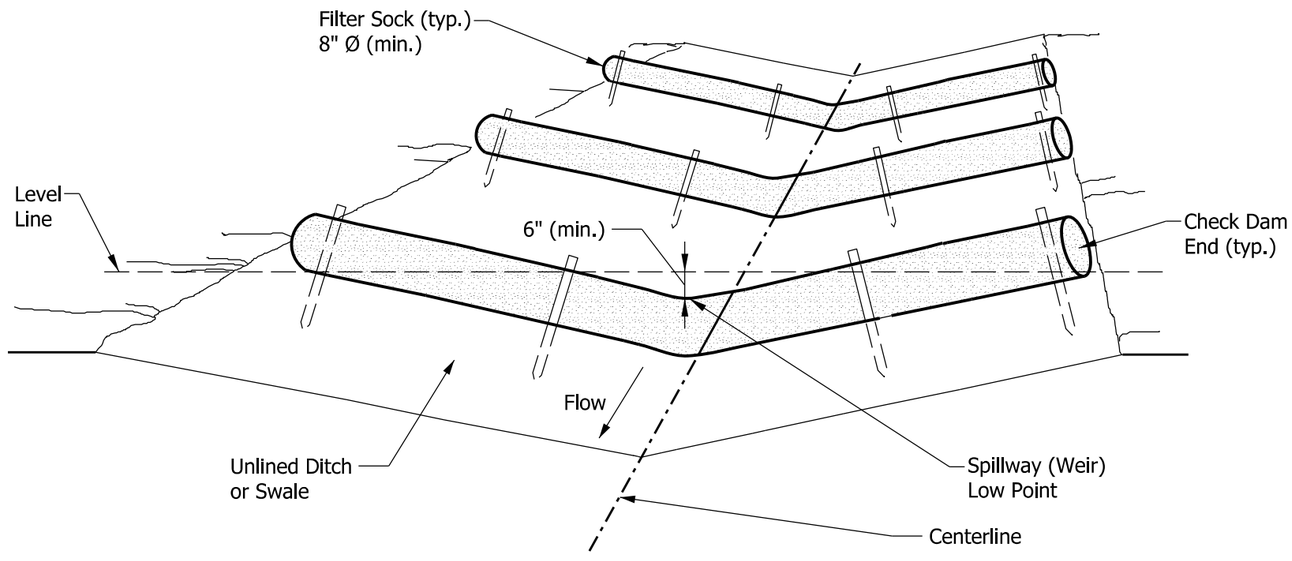

ISOMETRIC VIEW

INDIANA DEPARTMENT OF TRANSPORTATION

TEMPORARY CHECK DAM,
TRAVERSABLE, LOW PROFILE

SEPTEMBER 2019

STANDARD DRAWING NO. E 205-TECD-07

ELIZABETH W. PHILLIPS
REGISTERED
No. 10200124
STATE OF INDIANA
PROFESSIONAL ENGINEER

5/2/2019
DESIGN STANDARDS ENGINEER DATE

5/31/2019
CHIEF ENGINEER DATE

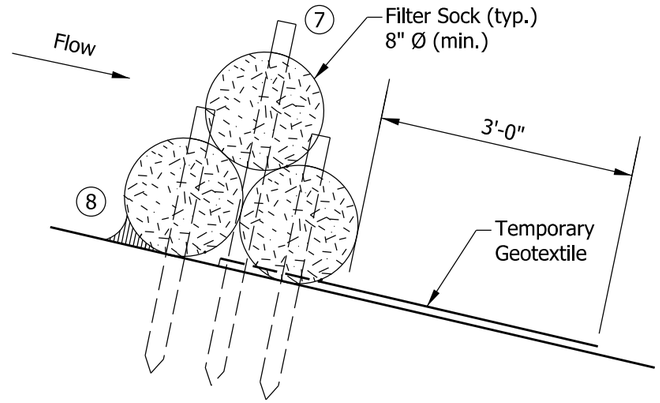

SECTION A-A

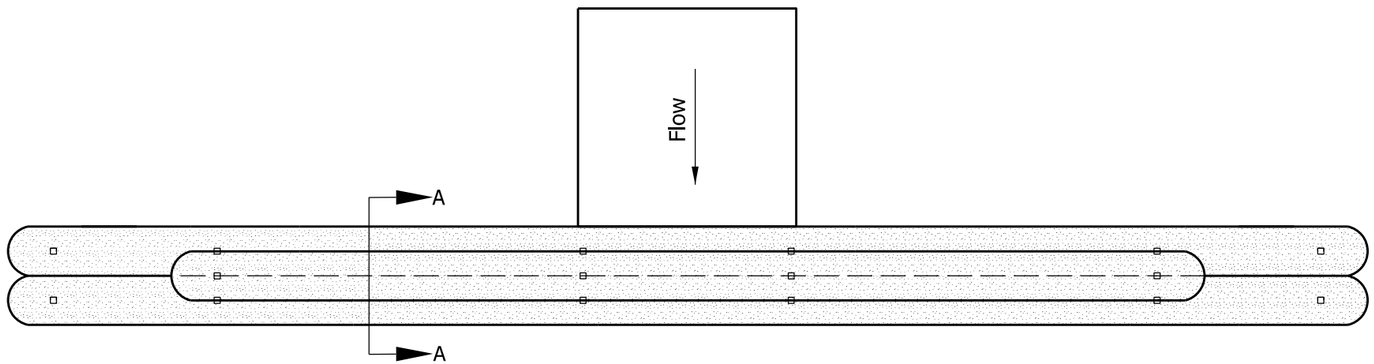

TRAVERSABLE CHECK DAM
PLAN VIEW

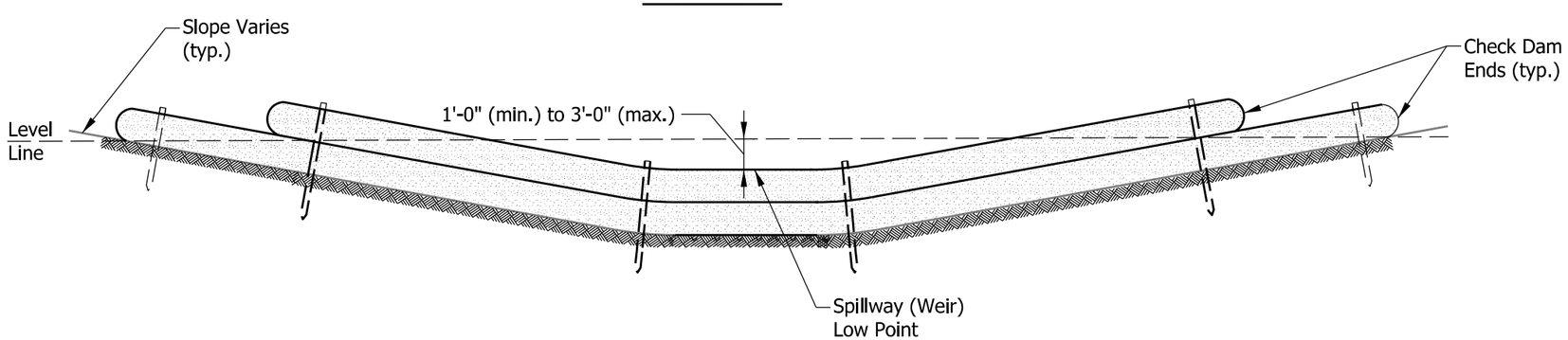

TRAVERSABLE CHECK DAM
ELEVATION

NOTES:

1. Fiber roll may be substituted for filter sock.
2. Check dams shall be placed perpendicular to the flow of water.
3. Check dam ends shall be positioned as shown such that storm water flows over the weir low point and does not flow around the ends.
4. Check dams shall remain in place until all upstream areas become stable.
5. Check dams shall be spaced such that the top of the downstream check dam is at the same elevation as the toe of the adjacent upstream check dam.
6. Filter sock shall be shall be secured as shown or in accordance with the manufacturer's instructions.

(7) Stake length shall be sufficient to wedge filter sock to the ground to prevent movement and undercutting.

(8) When undercutting is identified, compacted #5 or #8 stone shall be placed as shown.

INDIANA DEPARTMENT OF TRANSPORTATION

TEMPORARY CHECK DAM,
TRAVERSABLE

SEPTEMBER 2019

STANDARD DRAWING NO. E 205-TECD-08

ELIZABETH W. PHILLIPS
REGISTERED
No. 10200124
STATE OF INDIANA
PROFESSIONAL ENGINEER

5/2/2019
DESIGN STANDARDS ENGINEER — DATE

5/31/2019
CHIEF ENGINEER — DATE

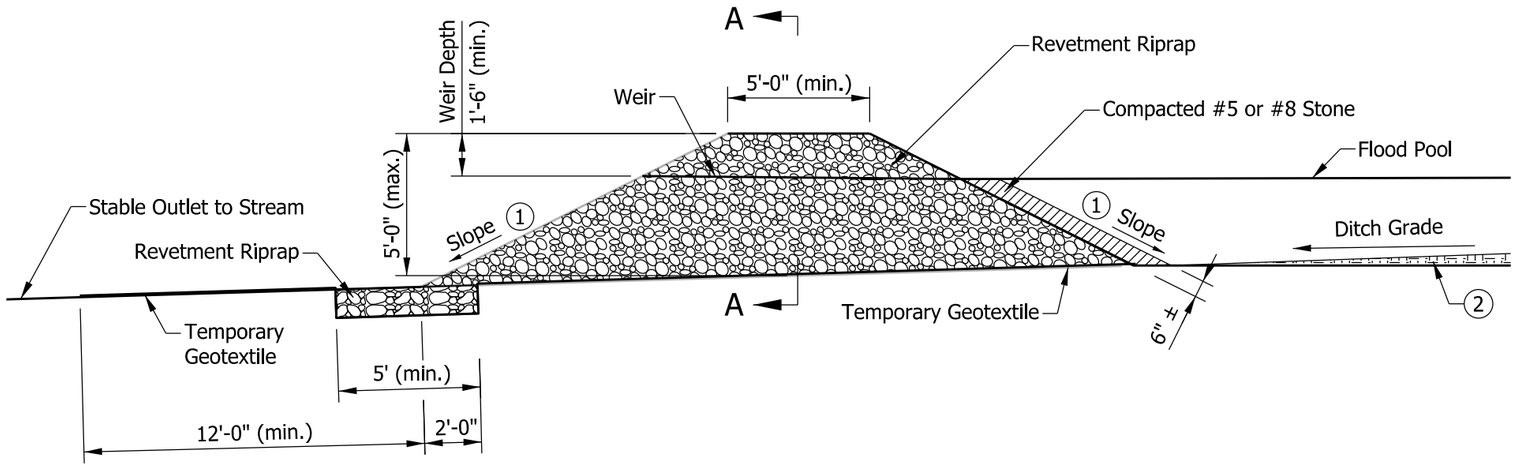

ELEVATION VIEW

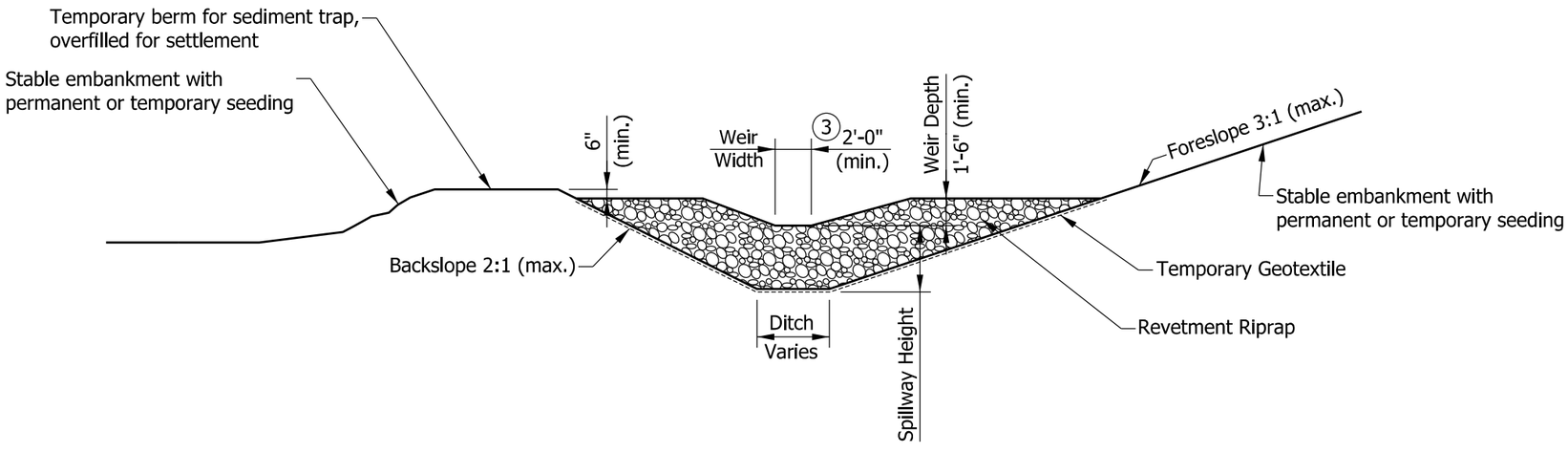

SECTION A-A

NOTES:

1. Slope should be 3:1 maximum on the near side with respect to the direction of traffic while the far side slope may be 2:1 maximum.
2. This area may be excavated below proposed ditch grade to achieve sediment trap capacity. Area shall not be excavated below the bottom elevation of sediment trap riprap. Over-excavation does not count toward trap capacity of 2-year, 24-hour storm event.
3. Weir width equals ditch bottom width, minimum 2ft.

INDIANA DEPARTMENT OF TRANSPORTATION

TEMPORARY SEDIMENT TRAP

SEPTEMBER 2019

STANDARD DRAWING NO. E 205-TECD-09

ELIZABETH W. PHILLIPS
REGISTERED
No. 10200124
STATE OF INDIANA
PROFESSIONAL ENGINEER

5/2/2019
DESIGN STANDARDS ENGINEER DATE

5/31/2019
CHIEF ENGINEER DATE

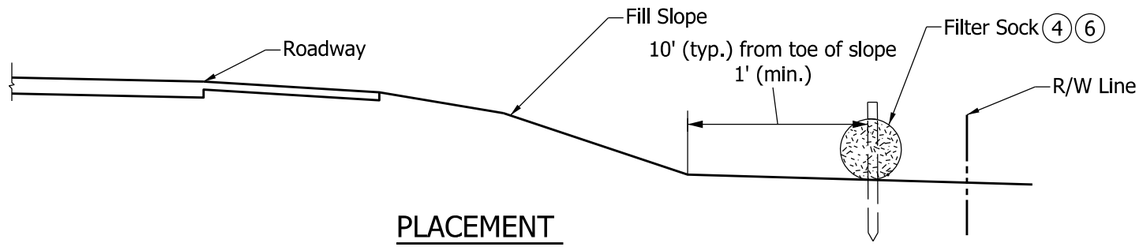

PLACEMENT
RELATIVE TO RIGHT-OF-WAY LINE

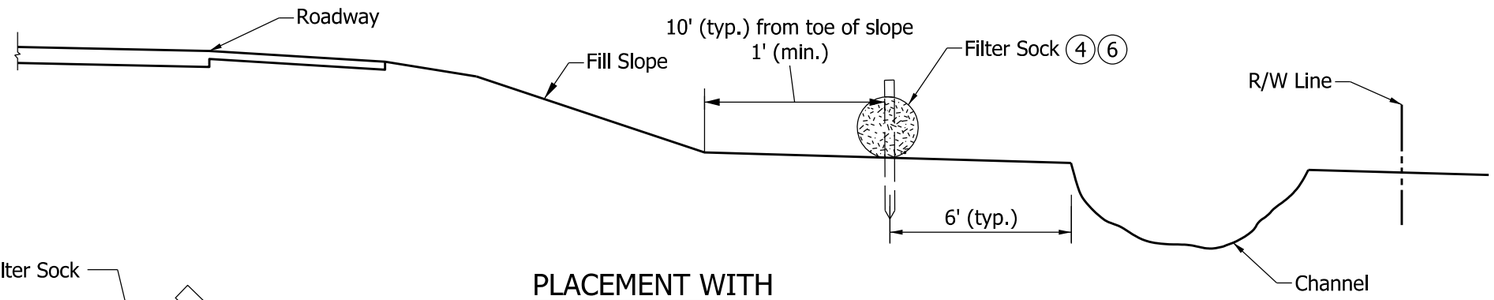

PLACEMENT WITH
CHANNEL IN RIGHT OF WAY

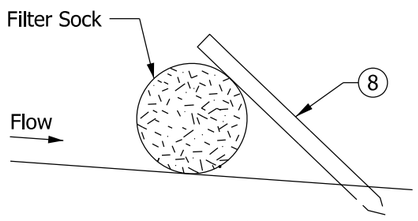

SLANTED STAKE
SECURING METHOD

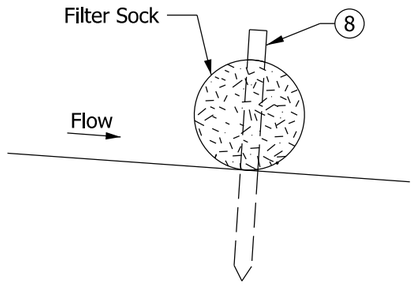

STAKE THROUGH
SECURING METHOD

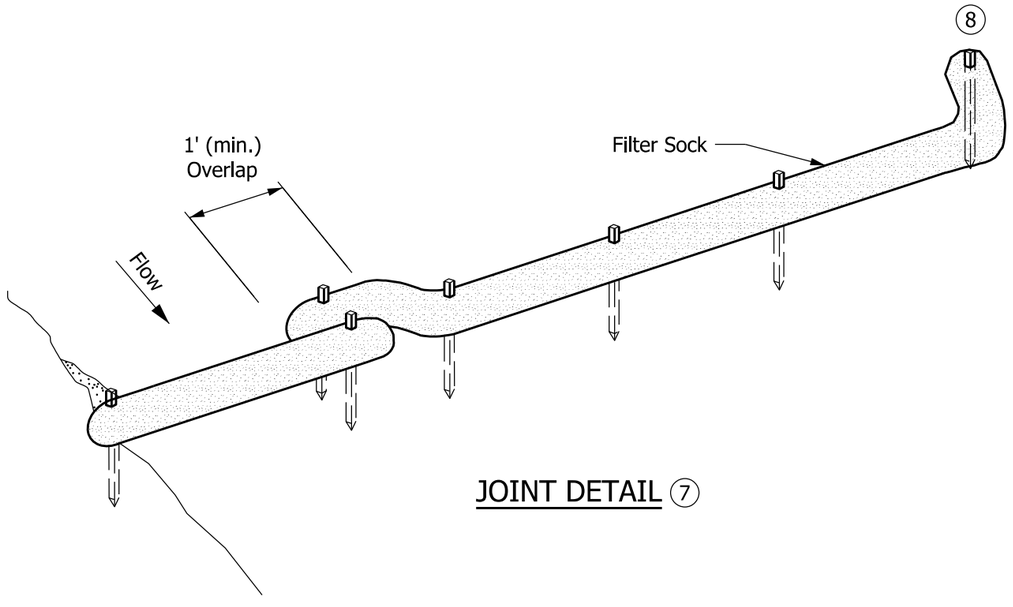

JOINT DETAIL 7

NOTES:

1. Fiber roll may be substituted for filter sock.
2. Filter sock shall be installed as shown or in accordance with manufacturer's recommendations.
3. Filter sock diameter shall be as required by design based on watershed area.

(4) Filter sock shall be placed perpendicular to the flow of water.

5. Filter sock shall be secured as shown or in accordance with the manufacturer's instructions.

(6) Filter sock does not require staking when fill slope is less than or equal to 12%, except when fill slope is below the Q_{100} water surface elevation and flood prone area.

(7) Filter socks shall be secured in locations below the Q_{100} water surface elevation and flood prone location. Filter sock end shall be secured using the stake through method. Intermediate points may be secured using either the stake through or slanted stake method.

(8) Stake angle and length shall be sufficient to wedge filter sock to the ground to prevent movement and undercutting.

INDIANA DEPARTMENT OF TRANSPORTATION

PERIMETER PROTECTION,
FILTER SOCK

SEPTEMBER 2019

STANDARD DRAWING NO. E 205-TECD-10

ELIZABETH W. PHILLIPS
REGISTERED
No. 10200124
STATE OF INDIANA
PROFESSIONAL ENGINEER

5/2/2019
DESIGN STANDARDS ENGINEER DATE

5/31/2019
CHIEF ENGINEER DATE

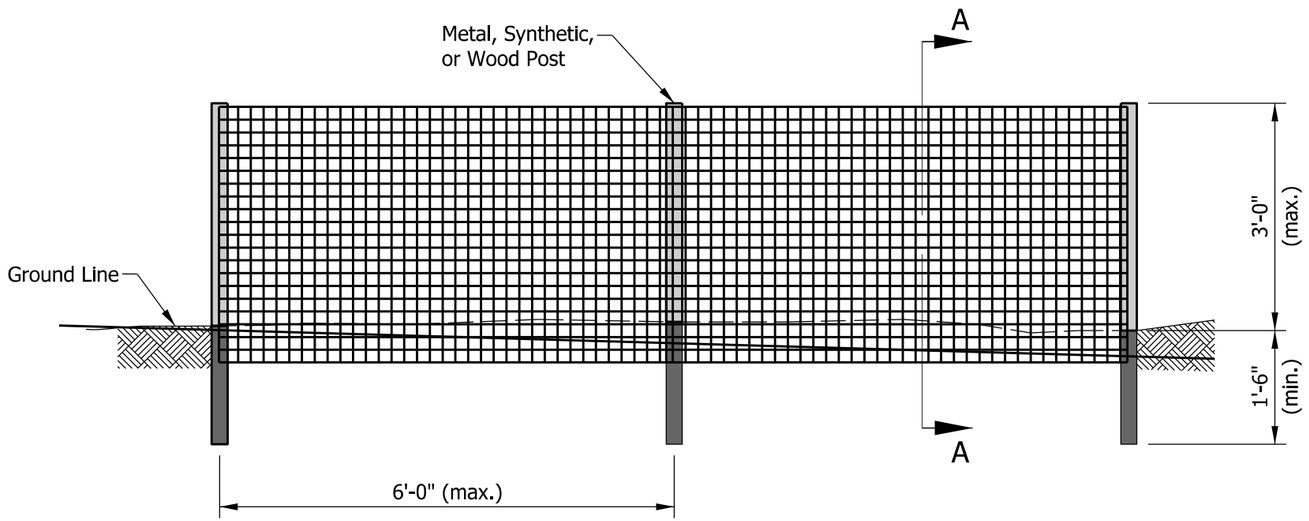

ELEVATION

NOTES:

1. Dimensions will vary based on right-of-way availability. Silt fence shall be placed as close as possible to the edge of construction limits.
2. The spacing of the tiebacks shall equal the spacing of the posts. Additional post depth or tiebacks may be required in unstable soils
3. Filter Sock shall be used instead of silt fence at or below Q_{100}.

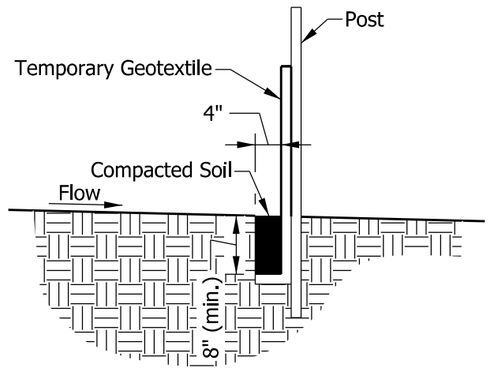

SECTION A-A

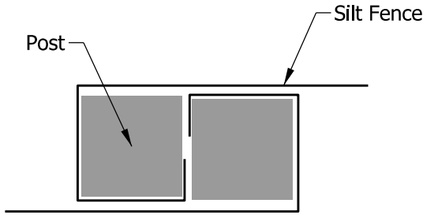

JOINT DETAIL
PLAN VIEW

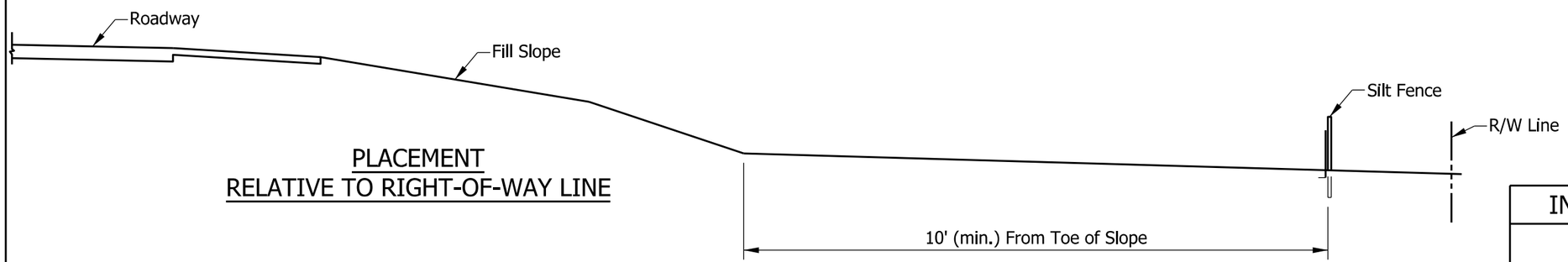

PLACEMENT
RELATIVE TO RIGHT-OF-WAY LINE

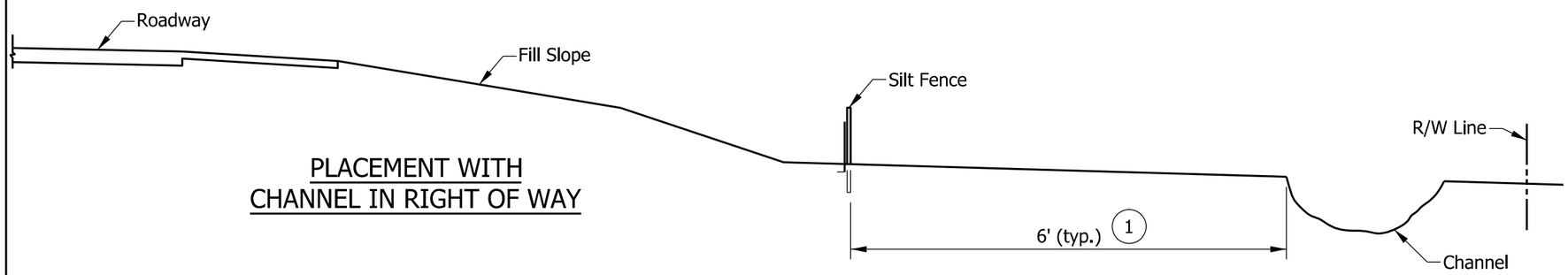

PLACEMENT WITH
CHANNEL IN RIGHT OF WAY

INDIANA DEPARTMENT OF TRANSPORTATION

PERIMETER PROTECTION,
SILT FENCE

SEPTEMBER 2019

STANDARD DRAWING NO. E 205-TECD-11

ELIZABETH W. PHILLIPS
REGISTERED
No. 10200124
STATE OF INDIANA
PROFESSIONAL ENGINEER

5/2/2019
DESIGN STANDARDS ENGINEER DATE

5/31/2019
CHIEF ENGINEER DATE

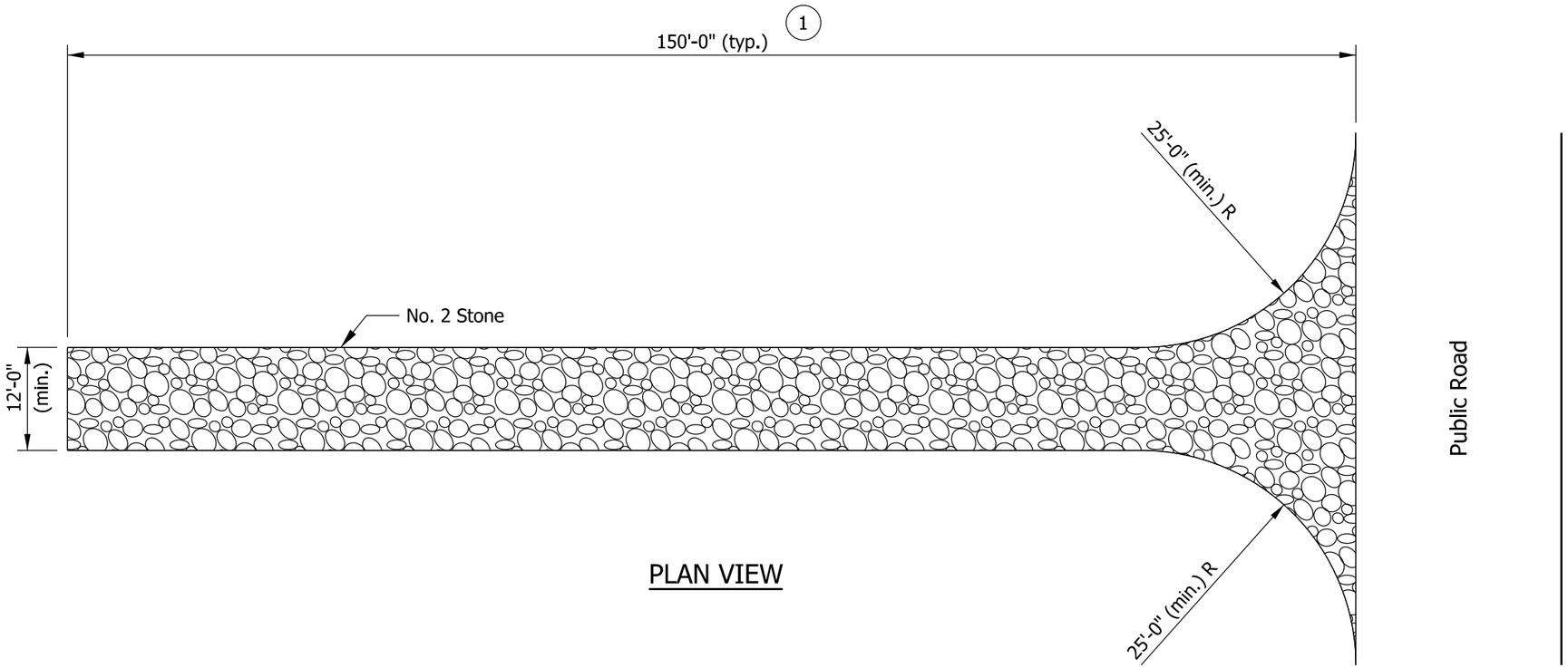

PLAN VIEW

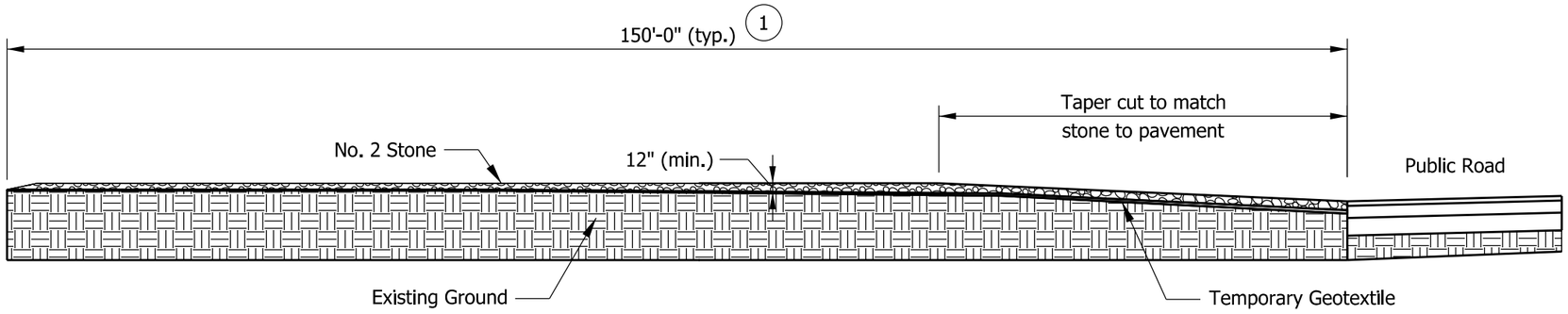

PROFILE VIEW

NOTE:

(1) May be reduced as justified by site conditions, but shall not be less than 50 ft.

INDIANA DEPARTMENT OF TRANSPORTATION

TEMPORARY EROSION CONTROL PERIMETER CONSTRUCTION ENTRANCE

SEPTEMBER 2019

STANDARD DRAWING NO. E 205-TECD-12

ELIZABETH W. PHILLIPS
REGISTERED
No. 10200124
STATE OF INDIANA
PROFESSIONAL ENGINEER

5/2/2019
DESIGN STANDARDS ENGINEER — DATE

5/31/2019
CHIEF ENGINEER — DATE

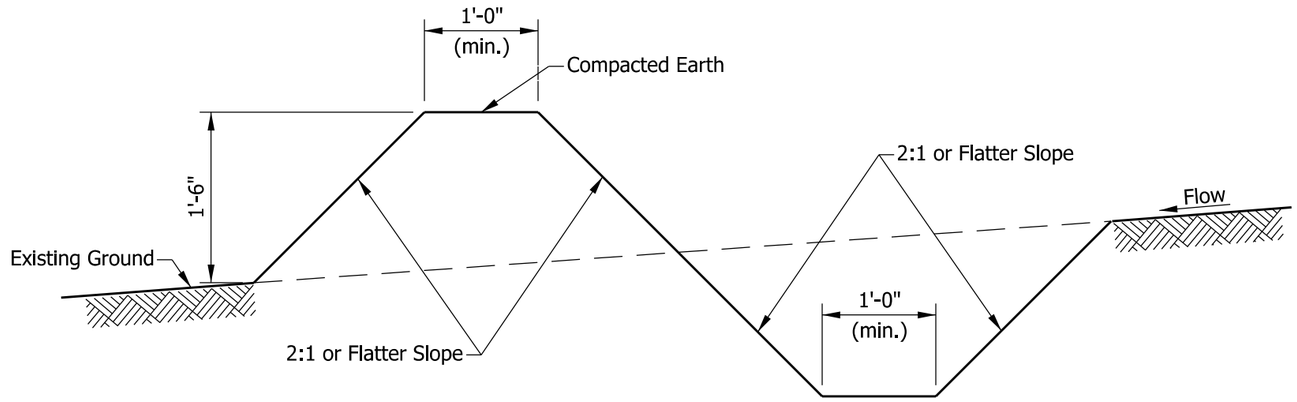

SECTION A-A

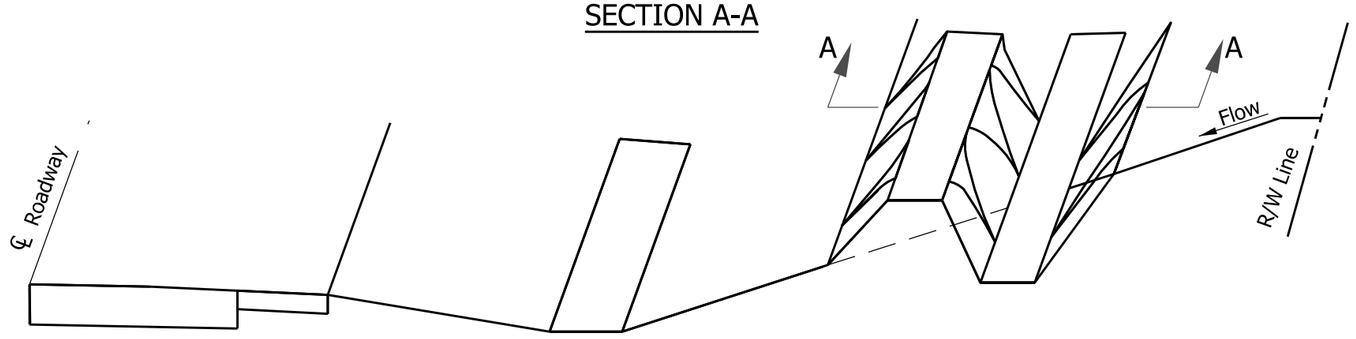

CUT SECTION

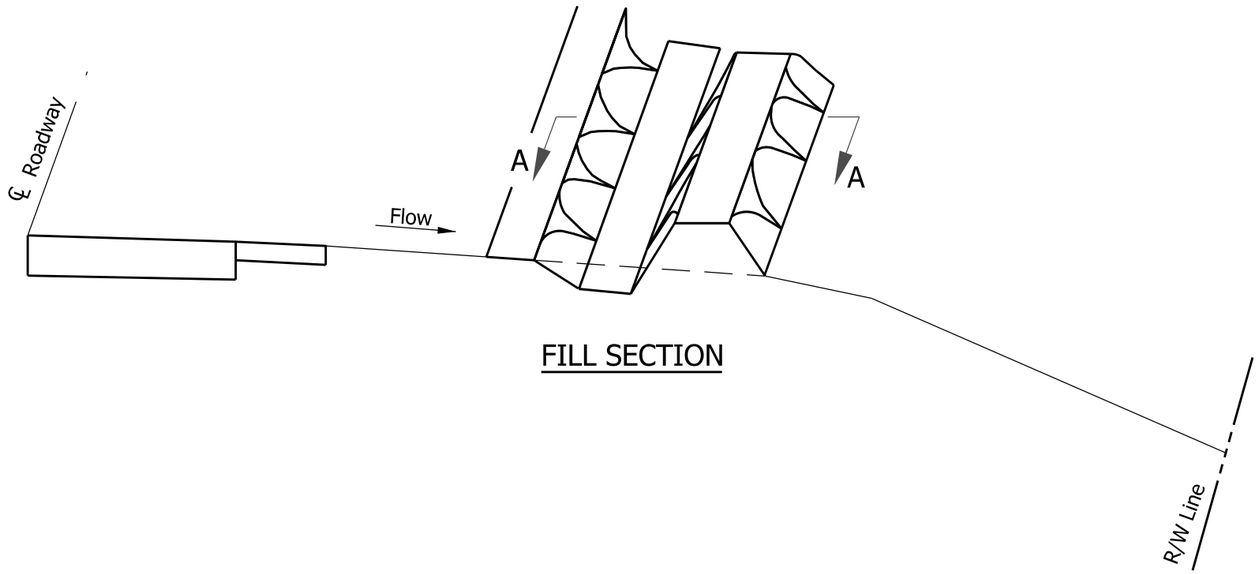

FILL SECTION

INDIANA DEPARTMENT OF TRANSPORTATION

TEMPORARY
INTERCEPTOR DITCH

MARCH 2002

STANDARD DRAWING NO. E 205-TECS-01

RICHARD L. VanCLEAVE
REGISTERED
No. 9750
STATE OF INDIANA
PROFESSIONAL ENGINEER

/s/ Richard L. VanCleave 03/01/02
DESIGN STANDARDS ENGINEER DATE

/s/ Richard K. Smutzer 03/01/02
CHIEF ENGINEER DATE

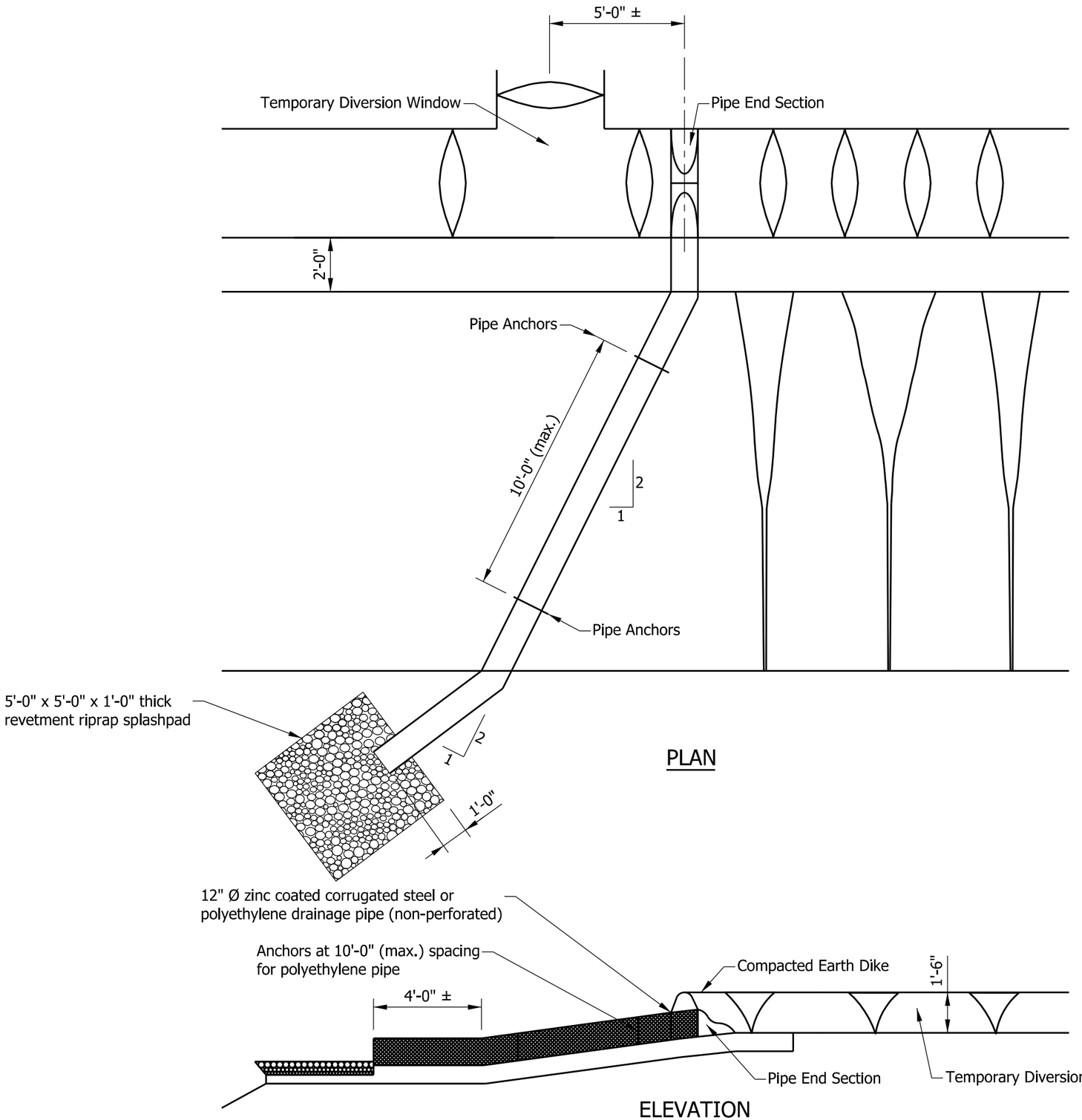

PLAN

ELEVATION

NOTES:

1. Length of slope drain shall be extended as required as fill slope is constructed.
2. The maximum drainage area for a 12" dia. pipe is 1 acre.
3. The required revetment riprap weight is 1.4 tons.

INDIANA DEPARTMENT OF TRANSPORTATION

TEMPORARY SLOPE DRAIN
PLAN AND ELEVATION VIEW

SEPTEMBER 2010

STANDARD DRAWING NO. E 205-TECS-02

RICHARD L. VanCLEAVE
REGISTERED
No. 9750
STATE OF INDIANA
PROFESSIONAL ENGINEER

/s/ Richard L. VanCleave 09/01/10
DESIGN STANDARDS ENGINEER DATE

/s/ Mark A. Miller 09/01/10
CHIEF ENGINEER DATE

NOTE:

1. See Standard Drawing E 205-TECS-02 for notes.

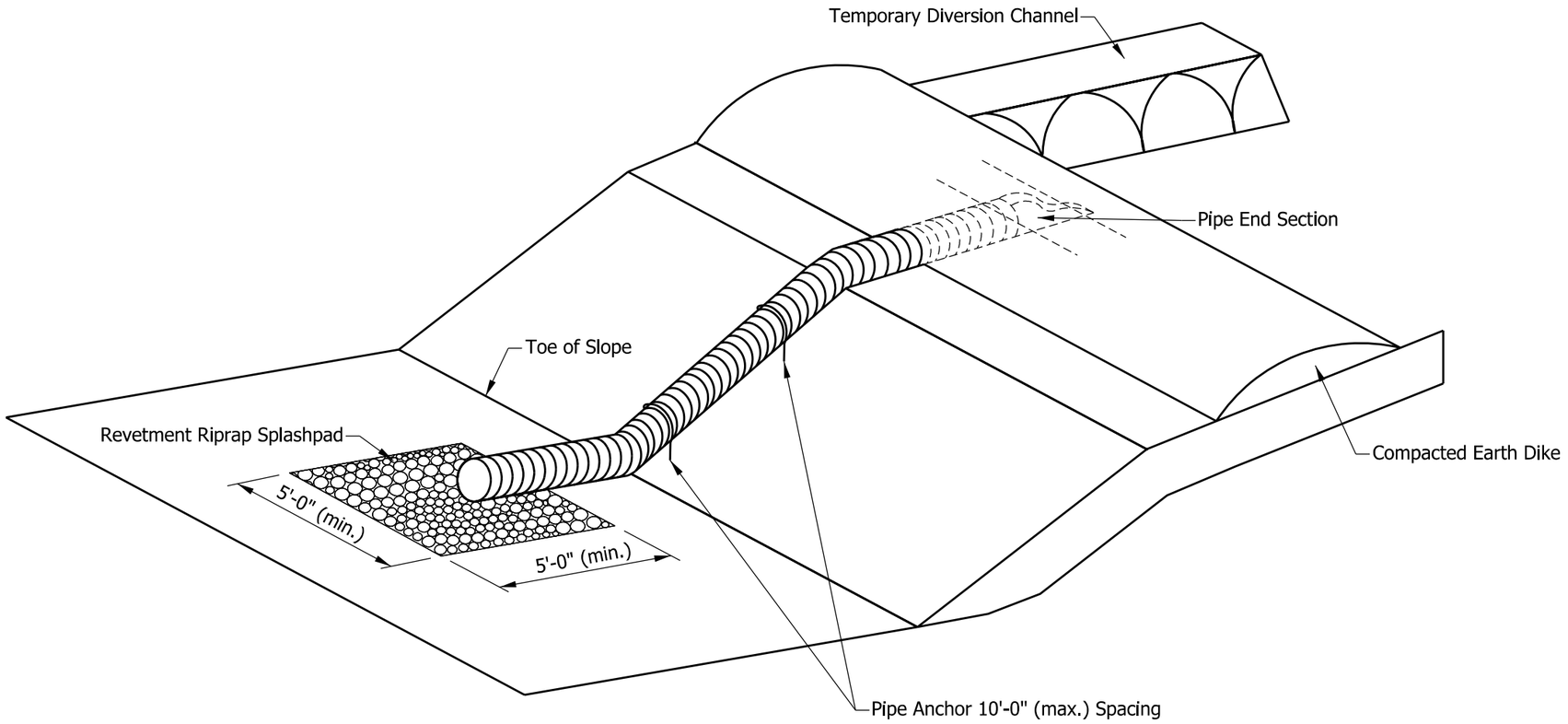

ISOMETRIC VIEW

INDIANA DEPARTMENT OF TRANSPORTATION

TEMPORARY SLOPE DRAIN
ISOMETRIC VIEW

SEPTEMBER 2001

STANDARD DRAWING NO. E 205-TECS-03

RICHARD L. VanCLEAVE
REGISTERED
No. 9750
STATE OF INDIANA
PROFESSIONAL ENGINEER

/s/ Richard L. VanCleave 9-04-01
DESIGN STANDARDS ENGINEER DATE

/s/ Firooz Zandi 9-04-01
CHIEF ENGINEER DATE

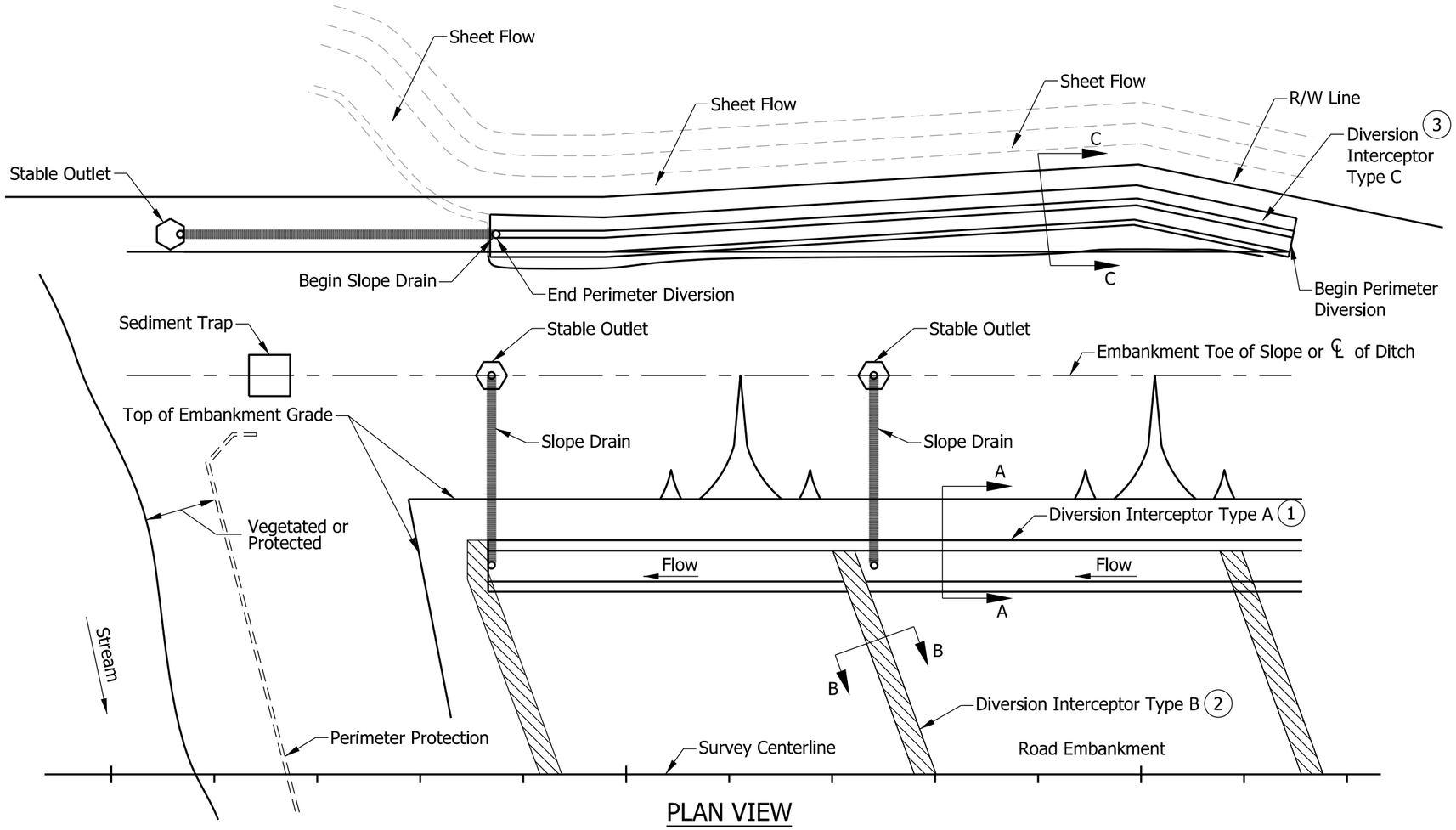

PLAN VIEW
TYPICAL LAYOUT

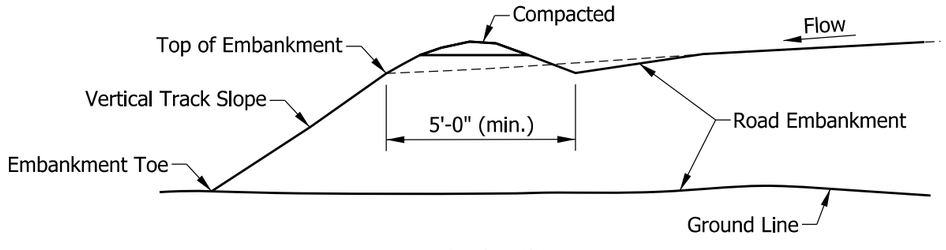

SECTION A-A

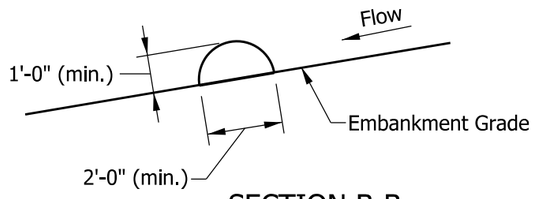

SECTION B-B

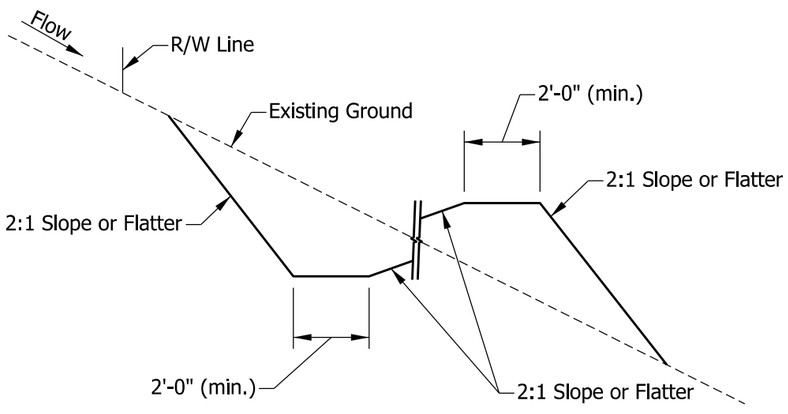

SECTION C-C

NOTES:

1. Diversion Interceptor Type A shall be used to control embankment runoff to slope drains during grading operations.
2. Diversion Interceptor Type B shall be a series of ridges used to divert runoff from long narrow corridor. Maximum length of the ridges shall not exceed 100 ft. Ridges shall be used for dividing grades and haul roads.
3. Diversion Interceptor Type C shall be used to collect offsite runoff before entering the disturbed portion of the project site. Maximum allowable runoff captured from offsite drainage area is 5 acres.

INDIANA DEPARTMENT OF TRANSPORTATION

TEMPORARY EROSION CONTROL SLOPE DIVERSION INTERCEPTORS

SEPTEMBER 2012

STANDARD DRAWING NO. E 205-TECS-04

RICHARD L. VanCLEAVE REGISTERED No. 9750 STATE OF INDIANA PROFESSIONAL ENGINEER

/s/ Richard L. Van Cleave 09/04/12
DESIGN STANDARDS ENGINEER DATE

/s/ Mark A. Miller 09/04/12
CHIEF ENGINEER DATE

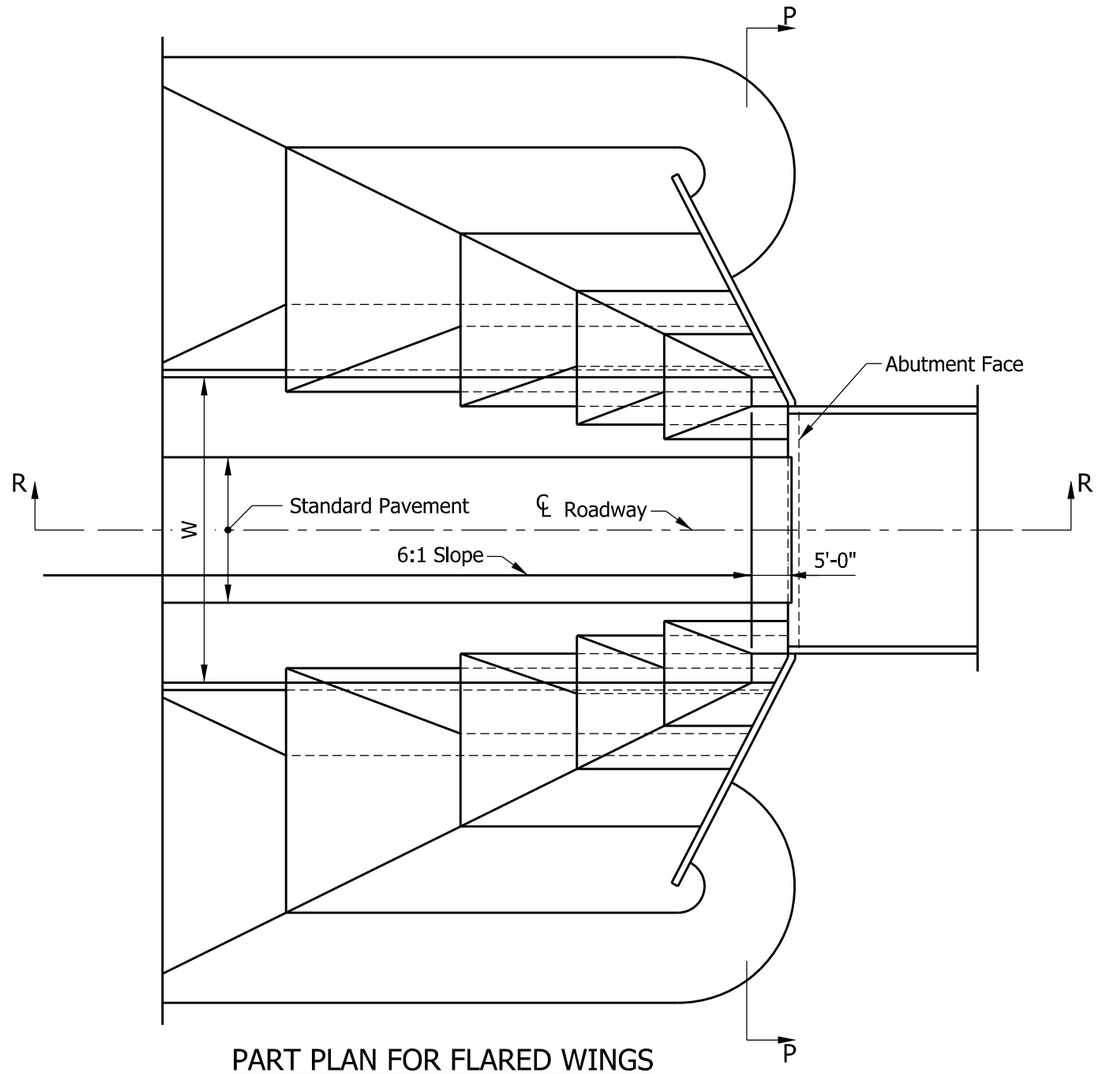

PART PLAN FOR FLARED WINGS

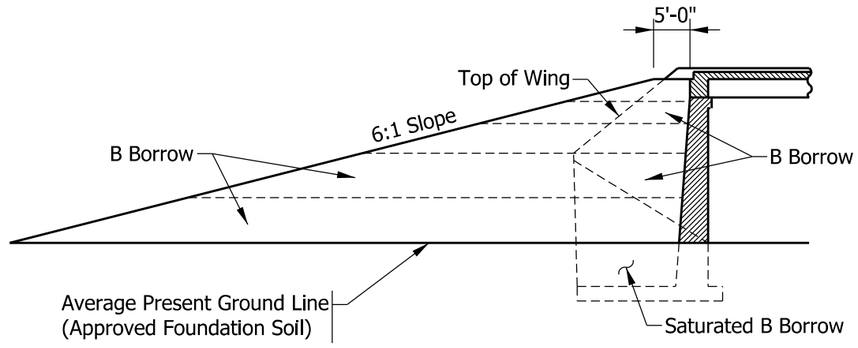

SECTION R-R

NOTES:

1. See Standard Drawing E 211-BFIL-02 for Section P-P.

INDIANA DEPARTMENT OF TRANSPORTATION

PART PLAN FOR
FLARED WINGS

MARCH 2003

STANDARD DRAWING NO. E 211-BFIL-01

RICHARD L. VanCLEAVE
REGISTERED
No. 9750
STATE OF INDIANA
PROFESSIONAL ENGINEER

/s/ Richard L. VanCleave 3-03-03
DESIGN STANDARDS ENGINEER DATE

/s/ Richard K. Smutzer 3-03-03
CHIEF ENGINEER DATE

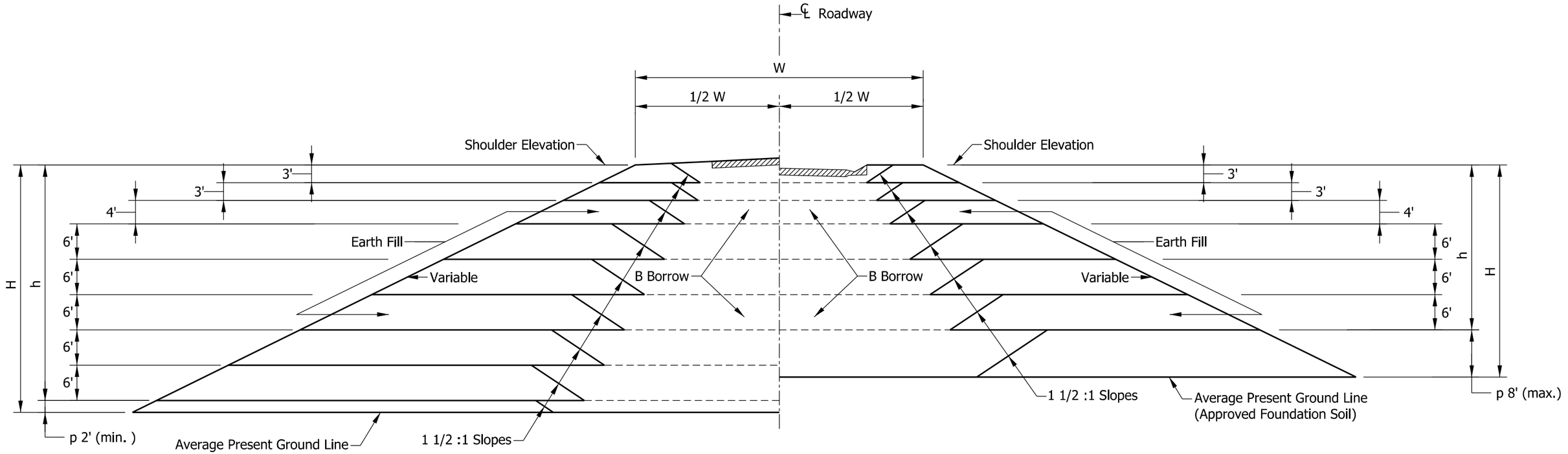

TYPICAL SECTION P-P

INDIANA DEPARTMENT OF TRANSPORTATION

FLARED WINGS
TYPICAL CROSS SECTION

SEPTEMBER 1994

STANDARD DRAWING NO. E 211-BFIL-02

ANTHONY L. UREMOVICH
REGISTERED
No. 18095
STATE OF INDIANA
PROFESSIONAL ENGINEER

/s/ Anthony L. Uremovich 11-15-99
DESIGN STANDARDS ENGINEER DATE

/s/ Firooz Zandi 11-15-99
CHIEF ENGINEER DATE

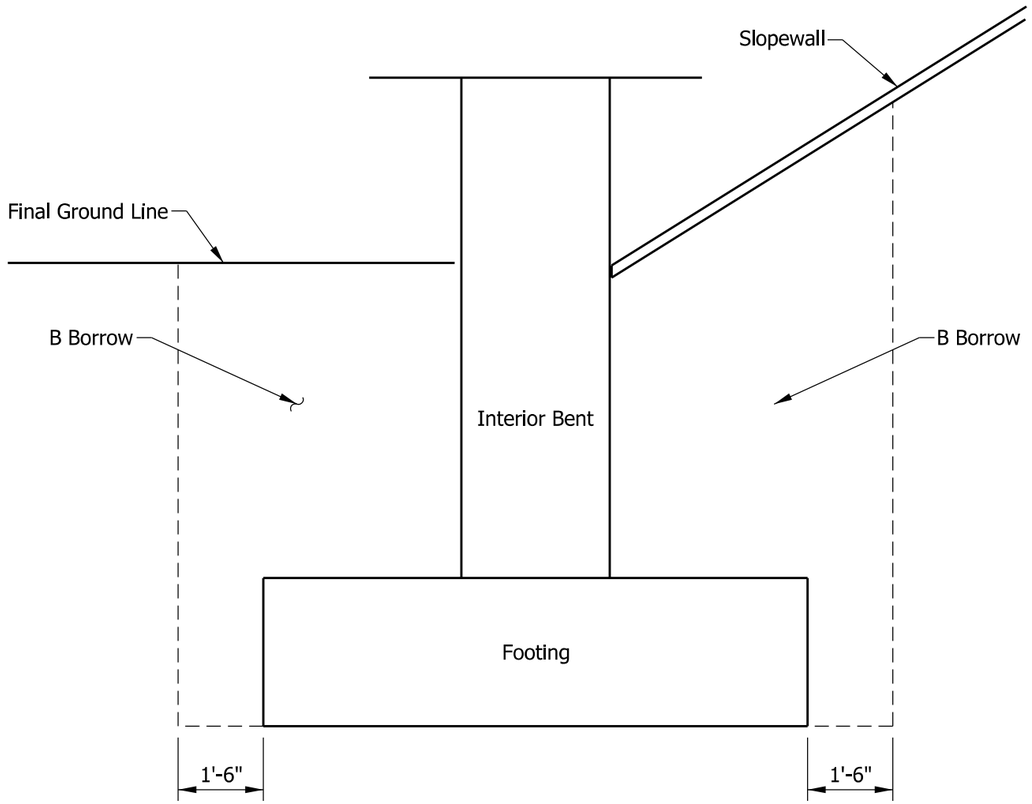

ADJACENT TO RAILROAD OR HIGHWAY

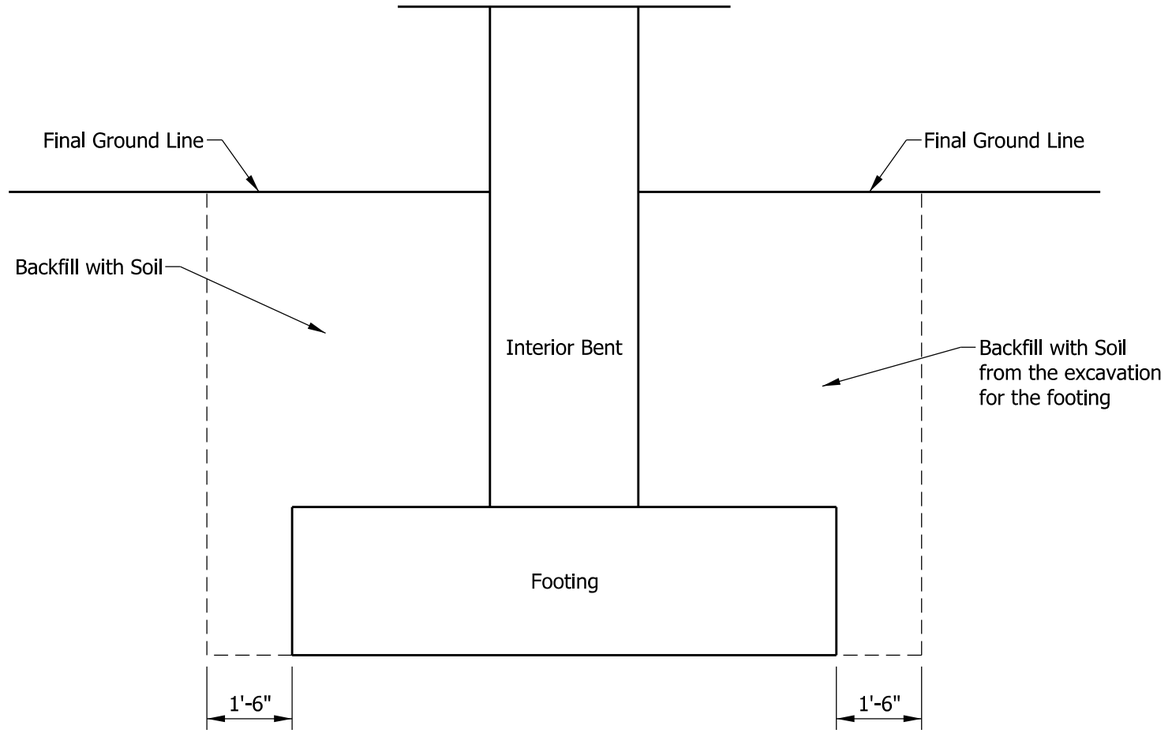

BRIDGE OVER WATERWAY

INDIANA DEPARTMENT OF TRANSPORTATION

BACKFILL PLACEMENT
INTERIOR BENT OR PIER

SEPTEMBER 2003

STANDARD DRAWING NO. E 211-BFIL-03

RICHARD L. VanCLEAVE
REGISTERED
No. 9750
STATE OF INDIANA
PROFESSIONAL ENGINEER

/s/ Richard L. Van Cleave *09/04/12*
DESIGN STANDARDS ENGINEER DATE

/s/ Mark A. Miller *09/04/12*
CHIEF ENGINEER DATE

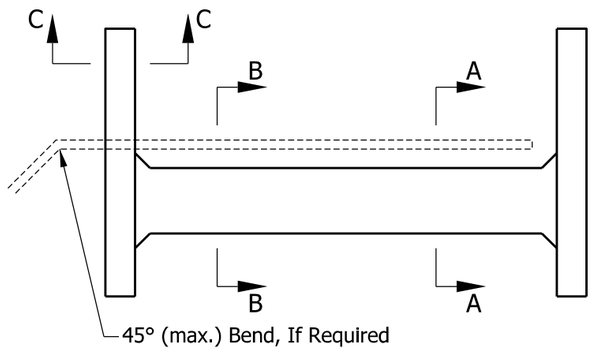

PLAN - END BENT

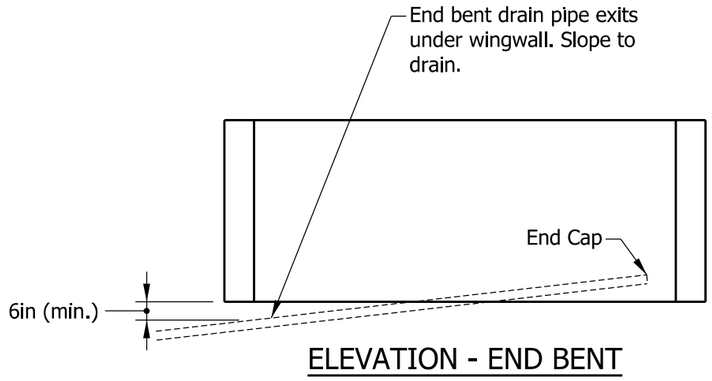

ELEVATION - END BENT

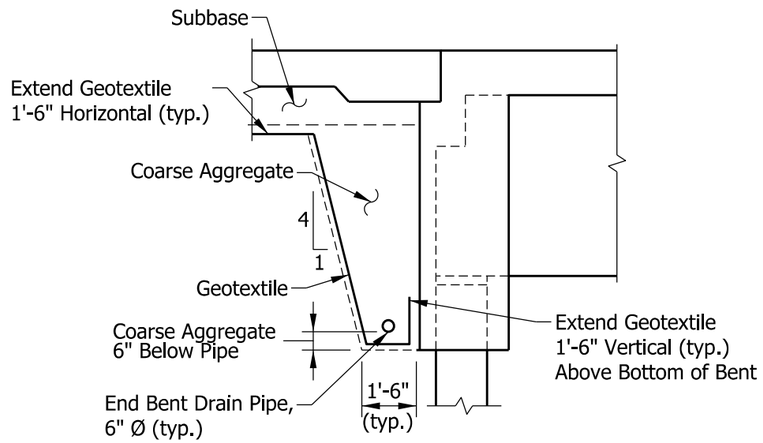

SECTION A-A

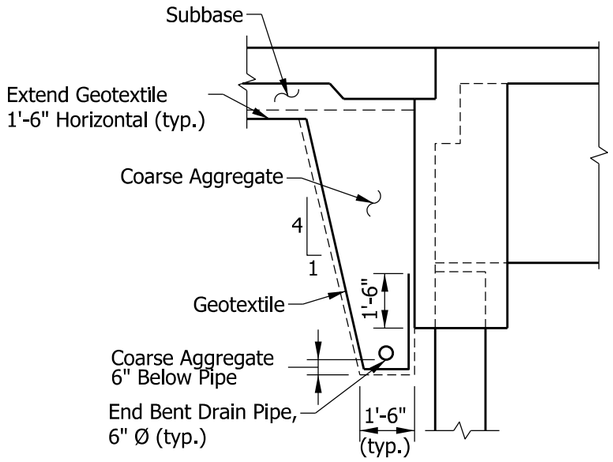

SECTION B-B

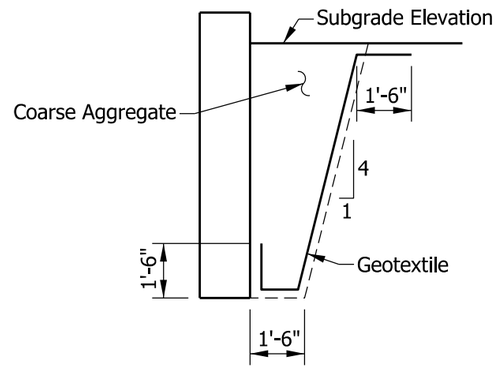

SECTION C-C

INDIANA DEPARTMENT OF TRANSPORTATION

BACKFILL PLACEMENT BEHIND END BENT BEAM OR GIRDER STRUCTURE

SEPTEMBER 2003

STANDARD DRAWING NO. E 211-BFIL-04

RICHARD L. VanCLEAVE REGISTERED No. 9750 STATE OF INDIANA PROFESSIONAL ENGINEER

/s/ Richard L. Van Cleave 09/04/12
DESIGN STANDARDS ENGINEER DATE

/s/ Mark A. Miller 09/04/12
CHIEF ENGINEER DATE

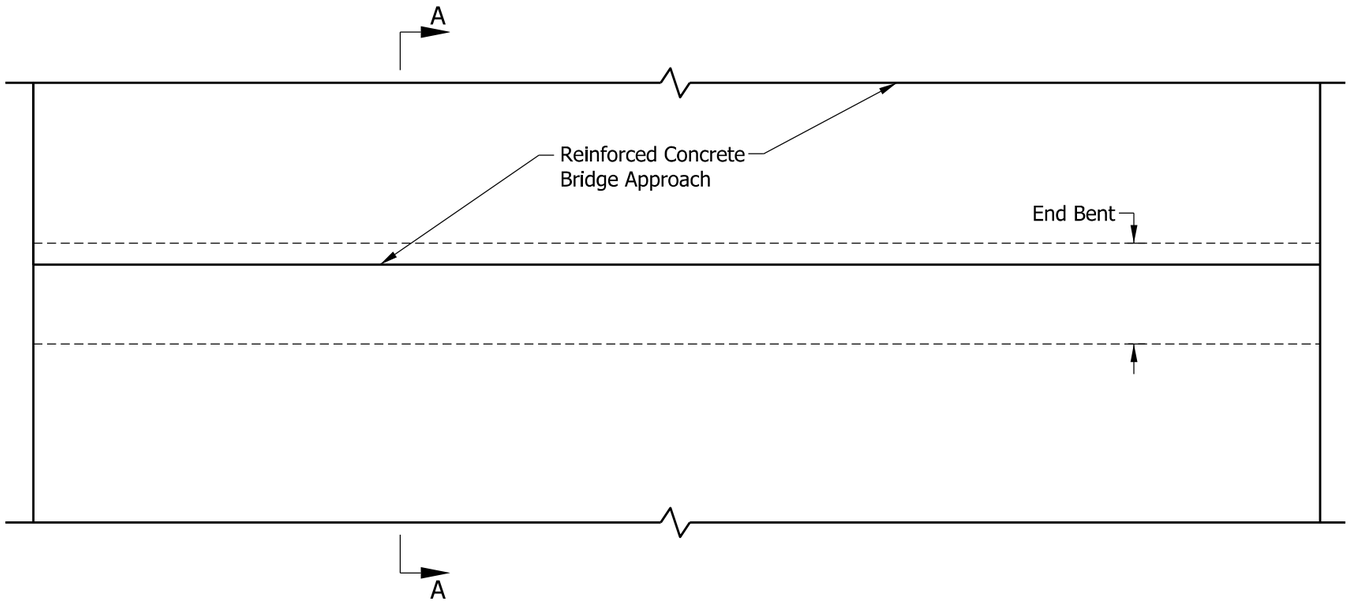

PLAN - END BENT

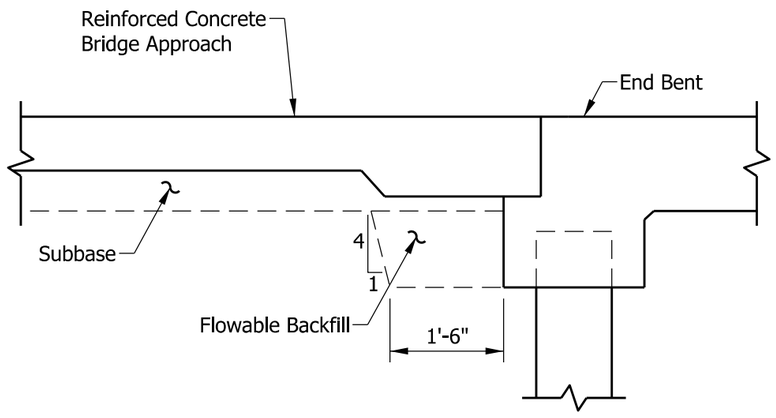

SECTION A-A

INDIANA DEPARTMENT OF TRANSPORTATION

BACKFILL PLACEMENT BEHIND END BENT
REINFORCED-CONCRETE SLAB BRIDGE

SEPTEMBER 2004

STANDARD DRAWING NO. E 211-BFIL-05

RICHARD L. VanCLEAVE
REGISTERED
No. 9750
STATE OF INDIANA
PROFESSIONAL ENGINEER

/s/ Richard L. Van Cleave 09/04/12
DESIGN STANDARDS ENGINEER DATE

/s/ Mark A. Miller 09/04/12
CHIEF ENGINEER DATE

NOTES:

1. This section shall be used when the existing shoulder width is less than 3 ft. or the slope is steeper than 12.5%.

2. This section shall be used when the existing shoulder slope is flatter than 12.5%.

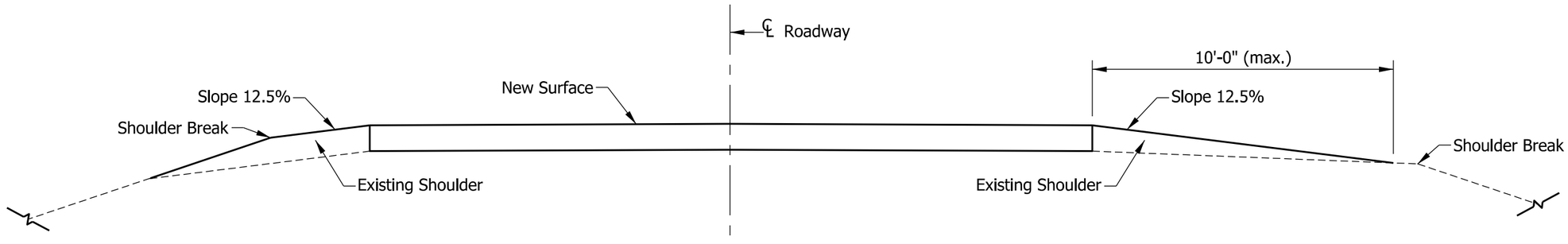

HALF SECTION ① | HALF SECTION ②

TYPICAL SECTION FOR SHOULDER TREATMENT

INDIANA DEPARTMENT OF TRANSPORTATION

SHOULDER TREATMENT FOR
RESURFACING WORK

SEPTEMBER 2007

STANDARD DRAWING NO. E 303-STRW-01

RICHARD L. VanCLEAVE
REGISTERED
No. 9750
STATE OF INDIANA
PROFESSIONAL ENGINEER

/s/ Richard L. VanCleave 09/04/07
DESIGN STANDARDS ENGINEER DATE

/s/ Mark A.Miller 09/04/07
CHIEF ENGINEER DATE

NOTES:

1. Transition milling areas inaccessible to the milling machine shall be removed by other methods to achieve a near vertical face.

(2) D(in.)=1 1/2 in. or 2 times the maximum particle size of specified HMA course, whichever is greater

(3) L(ft.)=D x 60

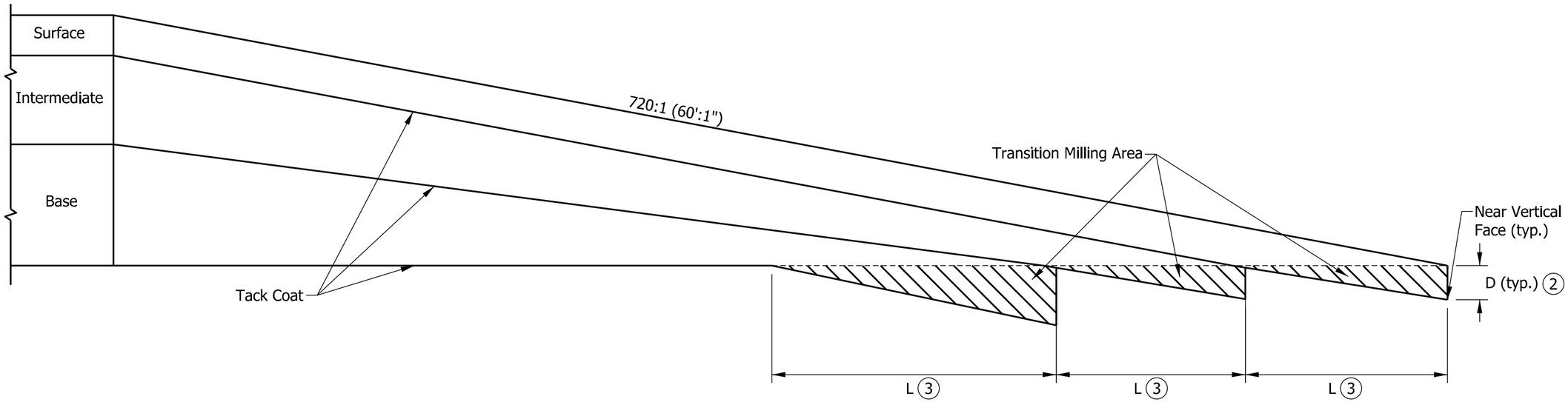

INDIANA DEPARTMENT OF TRANSPORTATION

HMA PAVEMENT WEDGING AND TRANSITION MILLING

SEPTEMBER 2020

STANDARD DRAWING NO. E 306-TMPT-01

ELIZABETH W. PHILLIPS REGISTERED No. 10200124 STATE OF INDIANA PROFESSIONAL ENGINEER

12/11/2019
DESIGN STANDARDS ENGINEER DATE

1/17/2020
CHIEF ENGINEER DATE

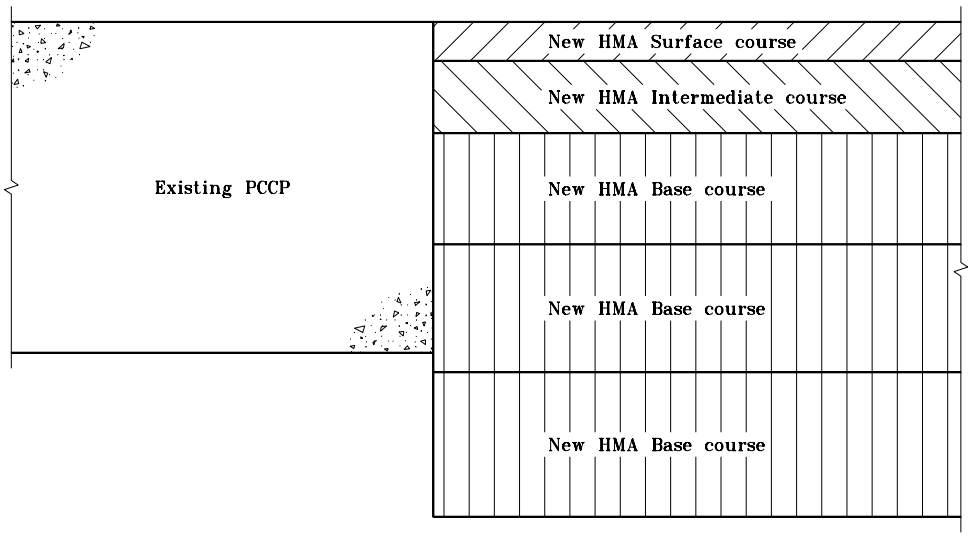

EXISTING PCCP TO NEW HMA PAVEMENT

INDIANA DEPARTMENT OF TRANSPORTATION

PAVEMENT TYPE TRANSITION

SEPTEMBER 1999

STANDARD DRAWING NO. **E 400-PTRN-01**

ANTHONY L. UREMOVICH REGISTERED No. 18095 STATE OF INDIANA PROFESSIONAL ENGINEER

DESIGN STANDARDS ENGINEER

/s/ Anthony L. Uremovich 9-01-99
DESIGN STANDARDS ENGINEER — DATE

/s/ Donald W. Lucas 9-01-99
CHIEF HIGHWAY ENGINEER — DATE

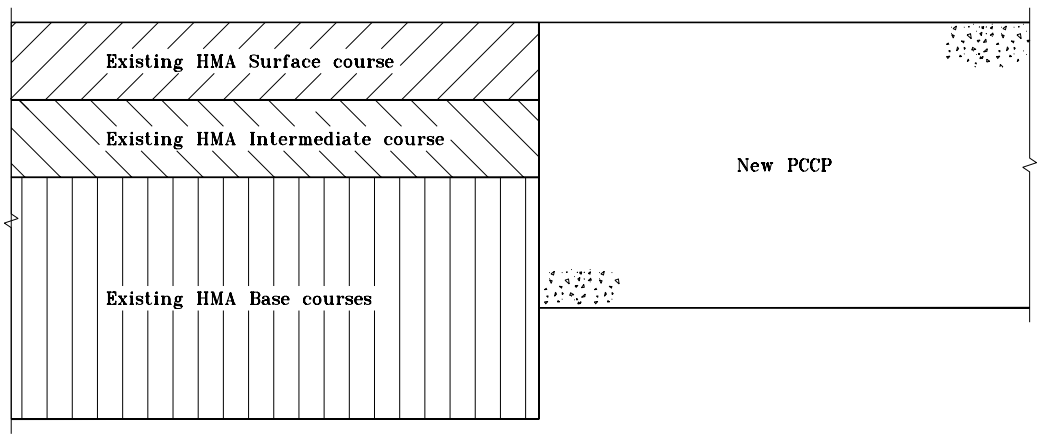

EXISTING HMA PAVEMENT TO NEW PCCP

INDIANA DEPARTMENT OF TRANSPORTATION

PAVEMENT TYPE TRANSITION

SEPTEMBER 1999

STANDARD DRAWING NO. **E 500-PTRN-01**

ANTHONY L. UREMOVICH REGISTERED No. 18095 STATE OF INDIANA PROFESSIONAL ENGINEER

DESIGN STANDARDS ENGINEER

/s/ Anthony L. Uremovich 9-01-99
DESIGN STANDARDS ENGINEER — DATE

/s/ Donald W. Lucas 9-01-99
CHIEF HIGHWAY ENGINEER — DATE

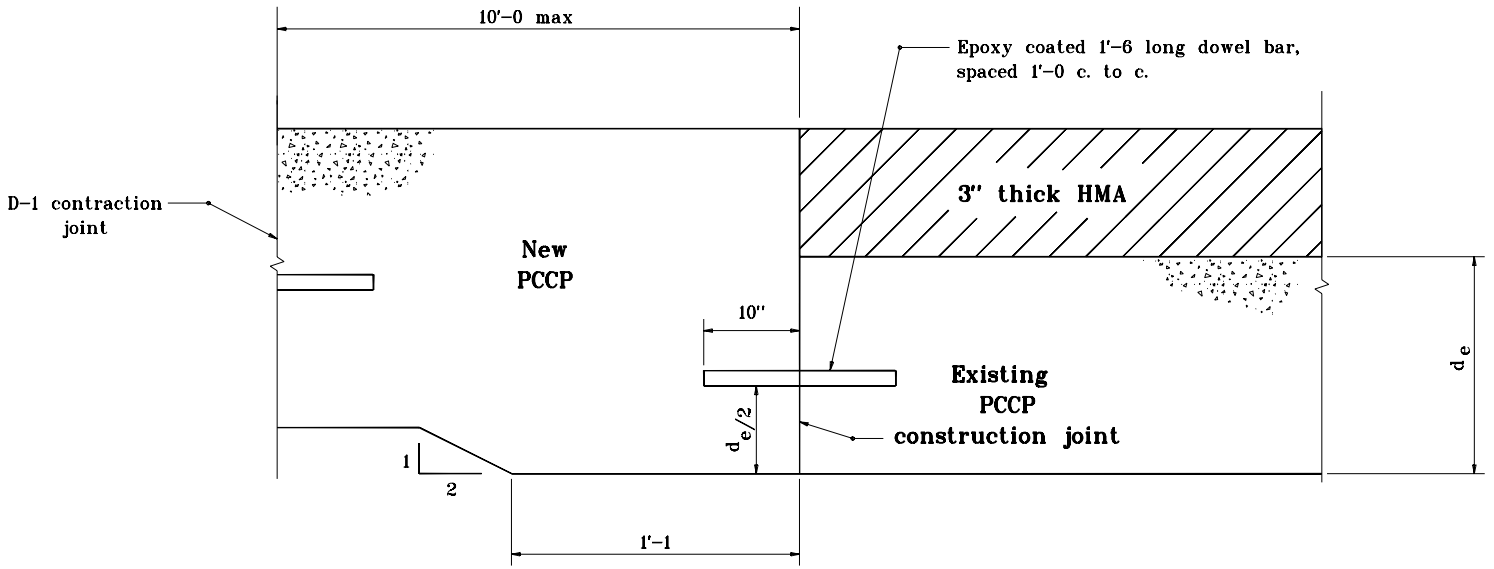

TRANSITION DESIGN WITH THICKENED SLAB

New PCCP Thickness is Less Than
that of 3" Thick HMA + Existing PCCP

INDIANA DEPARTMENT OF TRANSPORTATION

PAVEMENT TYPE TRANSITION

JANUARY 2000

STANDARD DRAWING NO. **E 500–PTRN–02**

ANTHONY L. UREMOVICH REGISTERED No. 18095 STATE OF INDIANA PROFESSIONAL ENGINEER

DESIGN STANDARDS ENGINEER

/s/ Anthony L. Uremovich 1–03–00
DESIGN STANDARDS ENGINEER — DATE

/s/ Firooz Zandi 1–03–00
CHIEF HIGHWAY ENGINEER — DATE

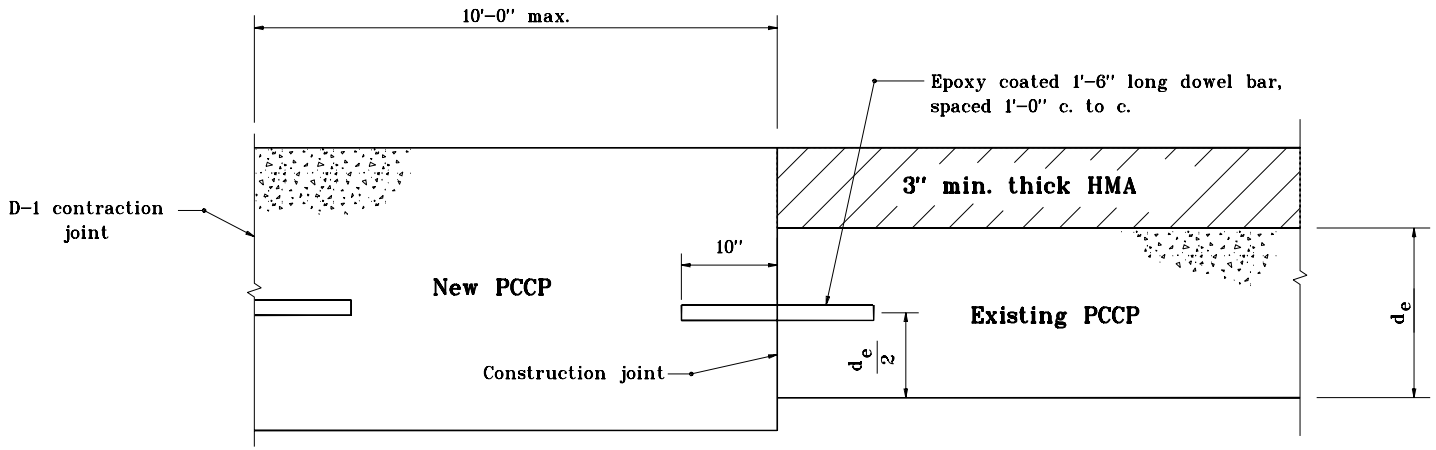

TRANSITION DESIGN

New PCCP Thickness is Greater Than or Equal to That of 3" Thick HMA + Existing PCCP

INDIANA DEPARTMENT OF TRANSPORTATION

PAVEMENT TYPE TRANSITION

SEPTEMBER 1999

STANDARD DRAWING NO. **E 500–PTRN–03**

ANTHONY L. UREMOVICH REGISTERED No. 18095 STATE OF INDIANA PROFESSIONAL ENGINEER

DESIGN STANDARDS ENGINEER

/s/ Anthony L. Uremovich 9–01–99
DESIGN STANDARDS ENGINEER — DATE

/s/ Donald W. Lucas 9–01–99
CHIEF HIGHWAY ENGINEER — DATE

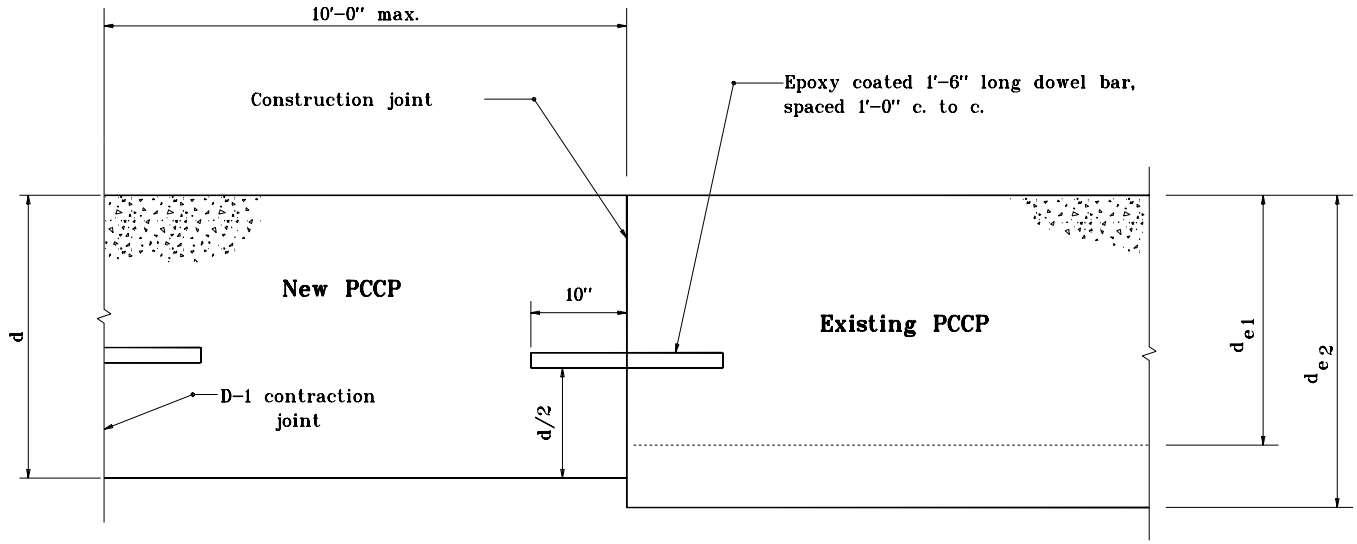

TRANSITION DESIGN

New PCCP to Existing PCCP

$d \geq d_{e_1}$ (New PCCP Thicker Than Existing)

$d < d_{e_2}$ (New PCCP Thinner Than Existing)

INDIANA DEPARTMENT OF TRANSPORTATION

PAVEMENT TYPE TRANSITION

SEPTEMBER 1999

STANDARD DRAWING NO. **E 500–PTRN–04**

ANTHONY L. UREMOVICH REGISTERED No. 18095 STATE OF INDIANA PROFESSIONAL ENGINEER

DESIGN STANDARDS ENGINEER

/s/ Anthony L. Uremovich 9–01–99
DESIGN STANDARDS ENGINEER DATE

/s/ Donald W. Lucas 9–01–99
CHIEF HIGHWAY ENGINEER DATE

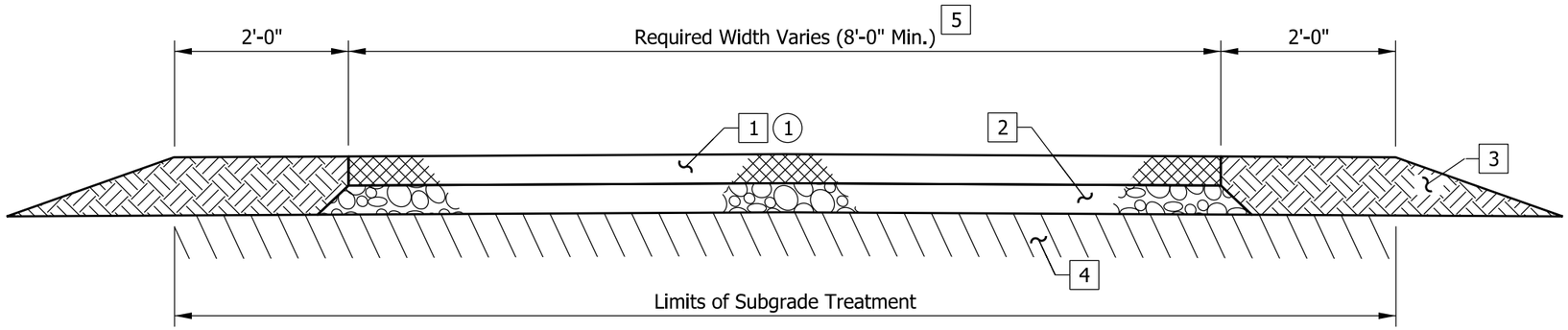

NOTES:

1. Transverse joints spaced at 8'-0" without dowels. Saw cut 1/8" wide and 1" deep.
2. See Standard Drawing series E 604-NVUF for HMA pavement sections.

LEGEND

1. 4" of PCCP
2. 4" Compacted Aggregate No. 53, Base
3. Earth Shoulder
4. Subgrade Treatment III, 6" of Soil Compacted to the Density and Moisture Requirement
5. Width and Cross Slope as Required

INDIANA DEPARTMENT OF TRANSPORTATION

NON-MOTORIZED VEHICLE USE FACILITY PCCP PAVEMENT SECTION

SEPTEMBER 2015

STANDARD DRAWING NO. E 502-NVUF-01

ELIZABETH W. PHILLIPS
REGISTERED
No. 10200124
STATE OF INDIANA
PROFESSIONAL ENGINEER

/s/ Elizabeth W. Phillips 03/09/15
DESIGN STANDARDS ENGINEER DATE

/s/ Mark A. Miller 03/09/15
CHIEF ENGINEER DATE

INDEX	
SHEET NO.	SUBJECT
1	Terminal Joint Index and General Notes
2	Terminal Joint, Type PCCP
3	Terminal Joint, Type HMA

GENERAL NOTES:

1. When the approach pavement is Continuously Reinforced Concrete Pavement (CRCP) or HMA over CRCP, the details shall be as shown elsewhere on the plans.
2. The width of the concrete sleeper slab shall match the width of the reinforced concrete bridge approach slab.
3. Reinforcing bars shall be epoxy coated.
4. Sleeper slab and terminal joint shall be concrete, Class A.

INDIANA DEPARTMENT OF TRANSPORTATION

TERMINAL JOINT
INDEX AND GENERAL NOTES

SEPTEMBER 2021

STANDARD DRAWING NO. E 503-BATJ-01

ELIZABETH P. MOUSER
REGISTERED
No. 10200124
STATE OF INDIANA
PROFESSIONAL ENGINEER

3/24/21
DESIGN STANDARDS ENGINEER DATE

3/29/2021
CHIEF ENGINEER DATE

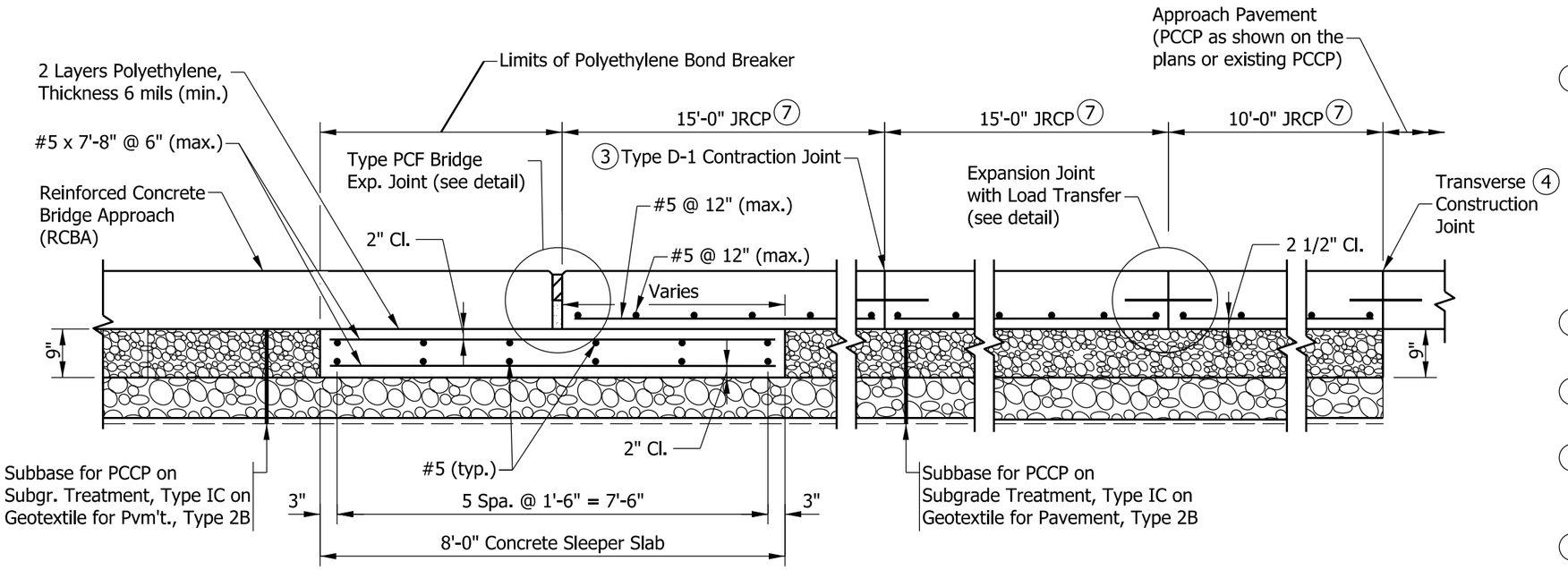

LONGITUDINAL SECTION

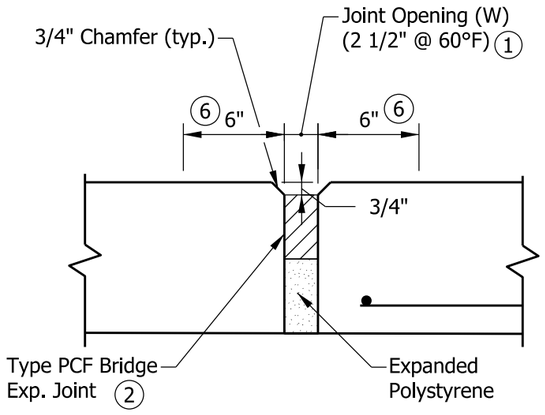

TYPE PCF BRIDGE EXPANSION JOINT DETAIL

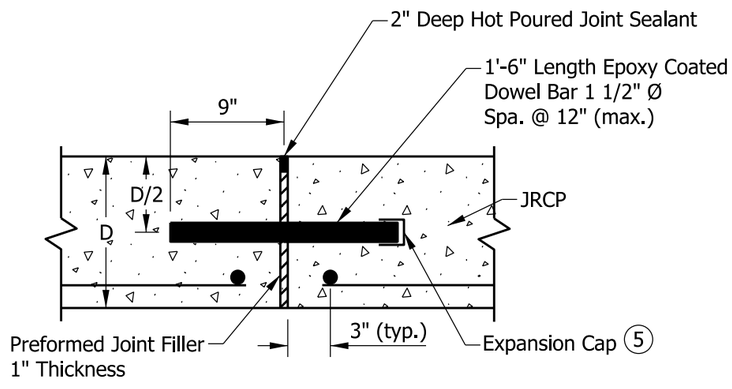

EXPANSION JOINT WITH LOAD TRANSFER DETAIL

NOTES:

(1) The joint opening width shall be 2.5 in. for expansion lengths of 150 ft or less, regardless of the joint setting temperature. For expansion lengths greater than 150 ft, the joint opening width shall be constructed based on the actual ambient temperature at the time of construction with the manufacturer's joint setting table. The expansion length shall be as shown on the plans.

(2) The Type PCF Bridge Expansion Joint shall be able to accomodate both the minimum and maximum joint opening widths as shown below.

- Expansion length 250 ft or less
  W(min.)=1.3 in.
  W(max.)=3.7 in.

- Expansion length greater than 250 ft and less than 400 ft.
  W(min.)=1.0 in.
  W(max.)=4.0 in.

(3) See Standard Drawing series E 503-CCPJ for type D-1 contraction joint details.

(4) See Standard Drawing series E 503-CCPJ for transverse construction joint details.

(5) Expansion cap shall be placed with an air gap of 1/4 in. min. between end of dowel bar and end of cap. Expansion caps shall be placed on alternating end of the dowel bar.

(6) Tining or grooving of the concrete shall be terminated 6 in. in advance of the joint opening.

(7) Jointed Reinforced Concrete Pavement (JRCP) thickness shall match the thickness of Reinforced Concrete Bridge Approach (RCBA).

8. Underdrains shall be constructed when shown on the plans.

INDIANA DEPARTMENT OF TRANSPORTATION

TERMINAL JOINT, TYPE PCCP

SEPTEMBER 2023

STANDARD DRAWING NO. E 503-BATJ-02

SUBHI BAZLAMIT
REGISTERED
No. 12000143
STATE OF INDIANA
PROFESSIONAL ENGINEER

Subhi Bazlamit 4/04/23
DESIGN STANDARDS ENGINEER DATE

05/08/2023
CHIEF ENGINEER DATE

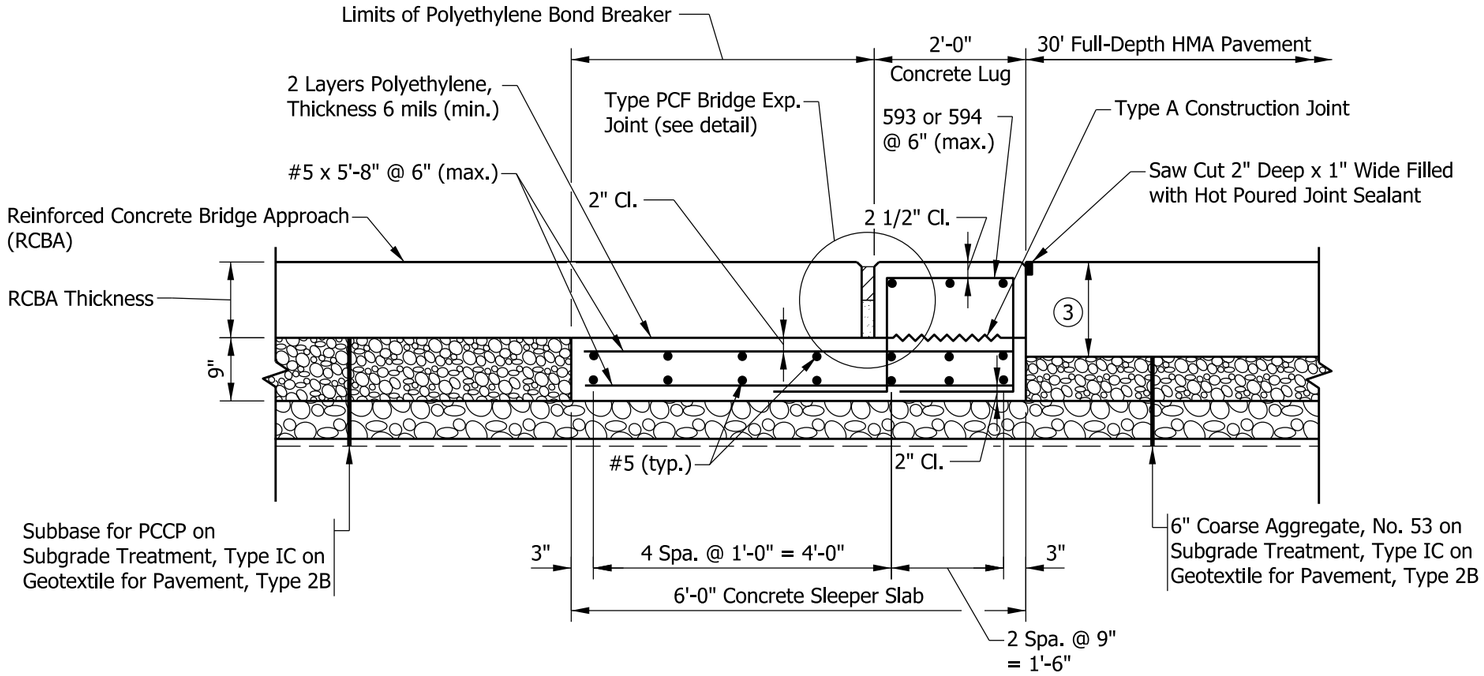

LONGITUDINAL SECTION

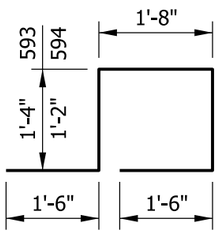

593 x 7'-4" (for 12" RCBA)
594 x 7'-0" (for 10" RCBA)

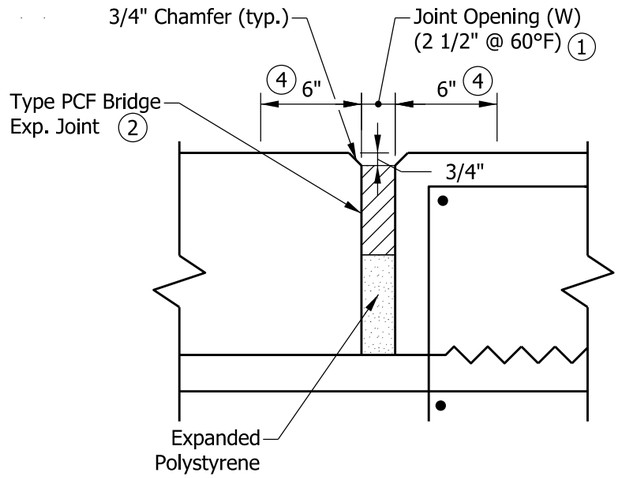

TYPE PCF BRIDGE EXPANSION JOINT DETAIL

NOTES:

1. The joint opening width shall be 2.5 in. for expansion lengths of 150 ft or less, regardless of the joint setting temperature. For expansion lengths greater than 150 ft, the joint opening width shall be constructed based on the actual ambient temperature at the time of construction with the manufacturer's joint setting table. The expansion length shall be as shown on the plans.

2. The Type PCF Bridge Expansion Joint shall be able to accomodate both the minimum and maximum joint opening widths as shown below.

   - Expansion length 250 ft or less
     W(min.)=1.3 in.
     W(max.)=3.7 in.

   - Expansion length greater than 250 ft and less than 400 ft
     W(min.)=1.0 in.
     W(max.)=4.0 in.

3. Pavement section to be shown on the plans.
   Minimum Thickness:

   - 15 in. HMA for 12 in. RCBA
   - 13 in. HMA for 10 in. RCBA

4. Tining or grooving of the concrete shall be terminated 6 in. in advance of the joint opening.

INDIANA DEPARTMENT OF TRANSPORTATION

TERMINAL JOINT, TYPE HMA

SEPTEMBER 2023

STANDARD DRAWING NO. E 503-BATJ-03

SUBHI BAZLAMIT REGISTERED No. 12000143 STATE OF INDIANA PROFESSIONAL ENGINEER

Subhi Bazlamit 4/04/23
DESIGN STANDARDS ENGINEER DATE

05/08/2023
CHIEF ENGINEER DATE

INDEX	
SHEET NO.	SUBJECT
1	PCCP Joints Index
2	Sawed Joints and Joint Sealant
3	D-1 Contraction Joint Details
4	Transverse Construction Joint Details
5	Longitudinal Joint Details

GENERAL NOTES:

1. Dowel bars shall be epoxy coated.
2. Tie-bars shall be epoxy coated.

INDIANA DEPARTMENT OF TRANSPORTATION

PCCP JOINTS
INDEX

SEPTEMBER 2020

STANDARD DRAWING NO. E 503-CCPJ-01

03/10/20
DESIGN STANDARDS ENGINEER DATE

05/08/20
CHIEF ENGINEER DATE

TYPE OF JOINT	DEPTH OF SAW CUT	DEPTH OF SEALANT
Longitudinal Joint	D/3	2" (min.)
D-1 Contraction Joint	D/3	2" (min.)
Retrofit Transverse Joint (3)	1"	Bottom of Saw Cut
Transverse Construction Joint	1"	Bottom of Saw Cut
Longitudinal Construction Joint	1"	Bottom of Saw Cut

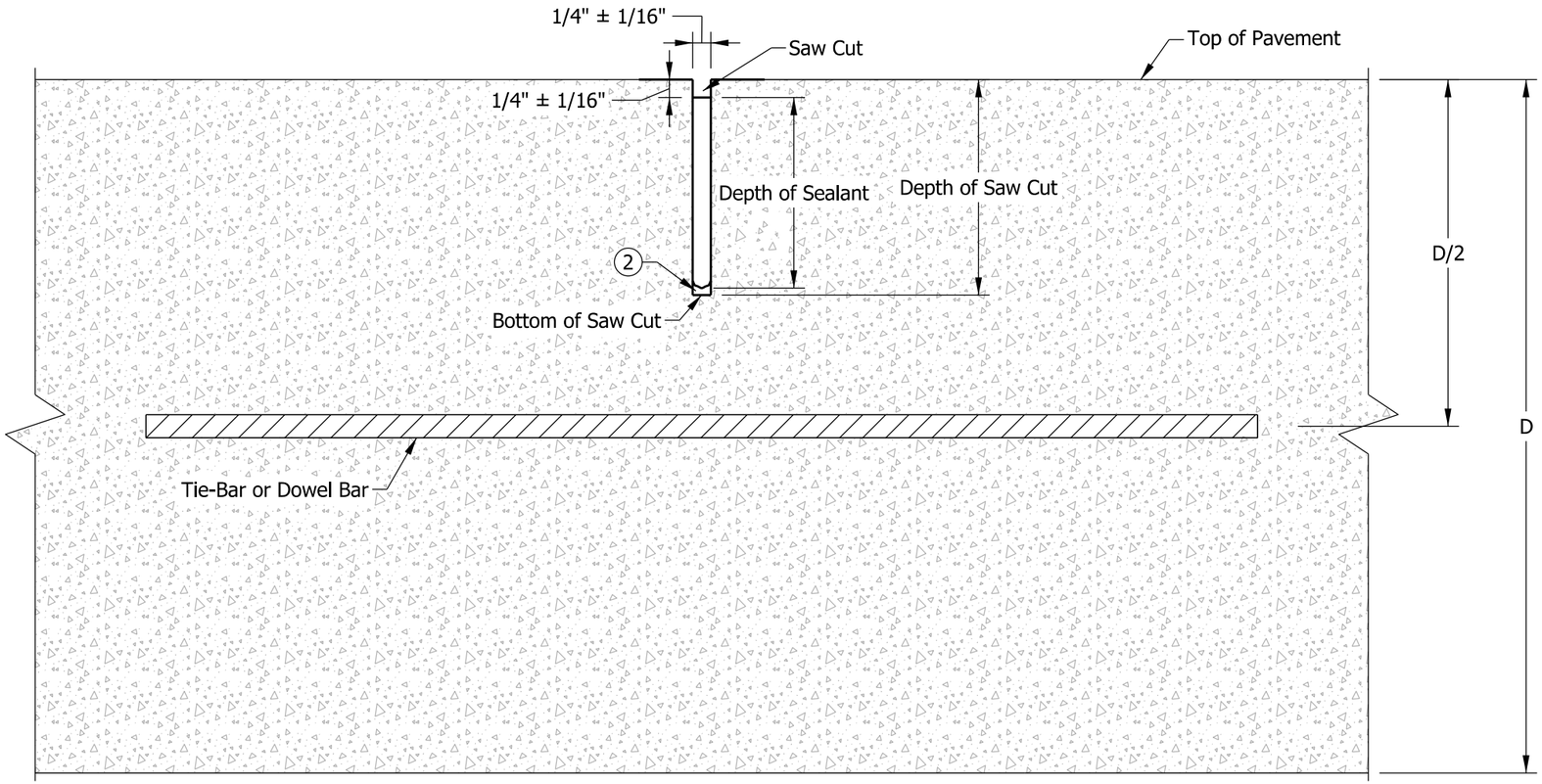

D = PCCP Thickness

NOTES:

1. Multiple passes of sealant may be required.

(2) Backer rod shall not be installed.

(3) For Retrofit Transverse Joint details, see Standard Drawing Series E 506-CCPP.

TRANSVERSE AND LONGITUDINAL
SAW CUT WITH HOT POURED SEALANT

INDIANA DEPARTMENT OF TRANSPORTATION

SAWED JOINTS
AND
JOINT SEALANT
SEPTEMBER 2026

STANDARD DRAWING NO. E 503-CCPJ-02

ELIZABETH P. MOUSER
REGISTERED
No. 10200124
STATE OF INDIANA
PROFESSIONAL ENGINEER

4/13/2026
DESIGN STANDARDS ENGINEER DATE

04/13/2026
CHIEF ENGINEER DATE

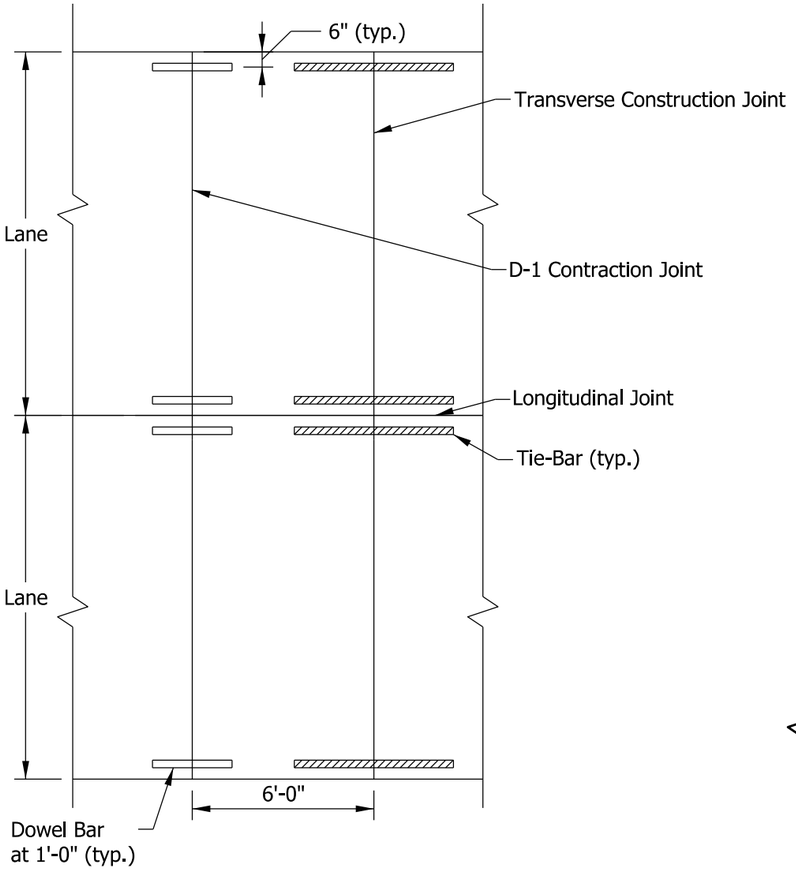

PLAN

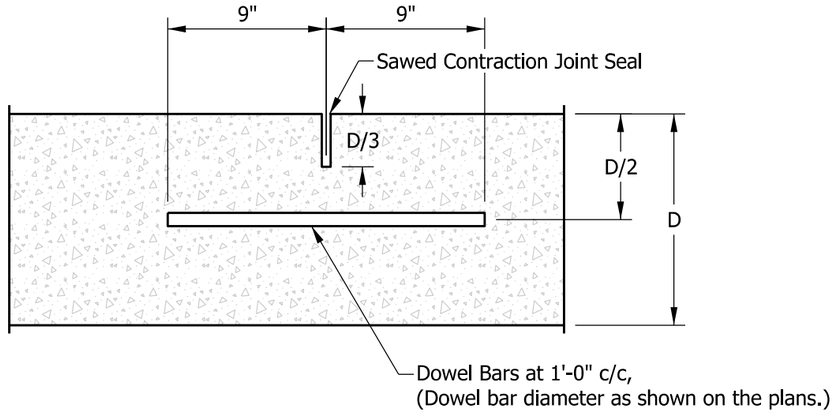

TYPE D-1 CONTRACTION JOINT
LONGITUDINAL SECTION THROUGH PCCP

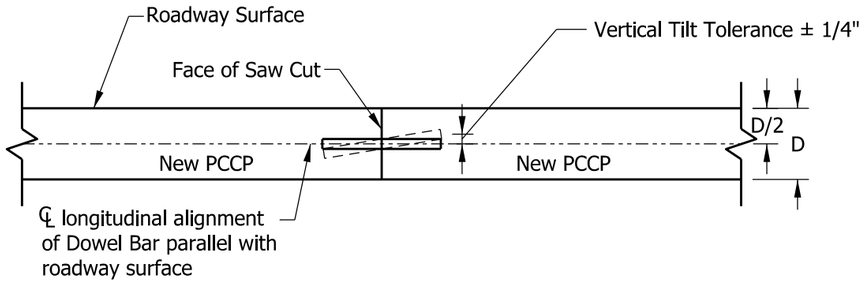

ELEVATION VERTICAL TILT

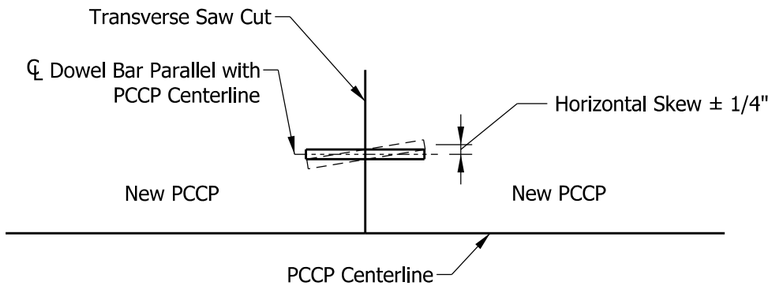

PLAN HORIZONTAL SKEW

INDIANA DEPARTMENT OF TRANSPORTATION

D-1 CONTRACTION JOINT DETAILS

SEPTEMBER 2020

STANDARD DRAWING NO. E 503-CCPJ-03

ELIZABETH W. PHILLIPS
REGISTERED
No. 10200124
STATE OF INDIANA
PROFESSIONAL ENGINEER

03/10/20
DESIGN STANDARDS ENGINEER DATE

05/08/20
CHIEF ENGINEER DATE

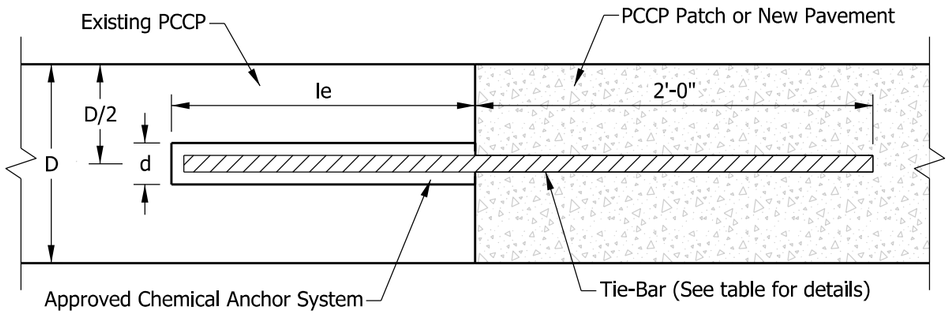

SECTION A-A
(RETROFITTED TIE-BARS)

NOTE:

1. Diameter of drilled hole (d) shall be in accordance with the chemical anchor system manufacturer's instructions.

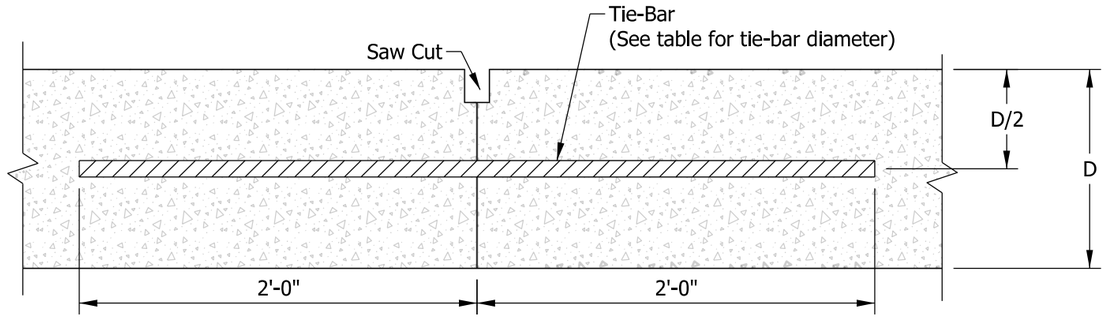

SECTION A-A
(TIE-BARS PLACED IN PLASTIC CONCRETE)

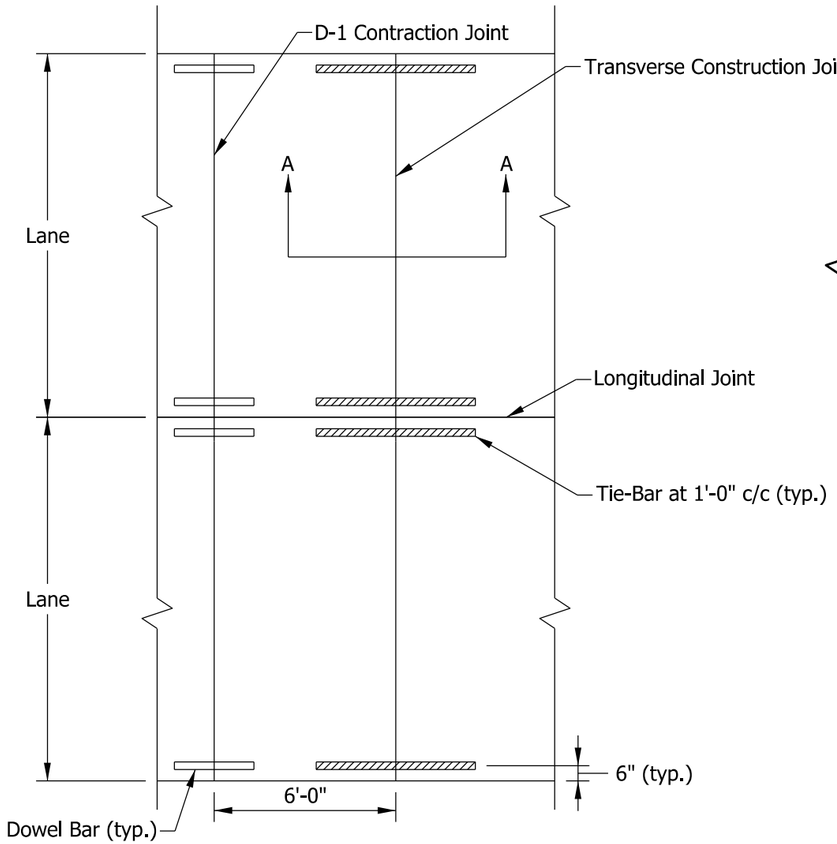

PLAN

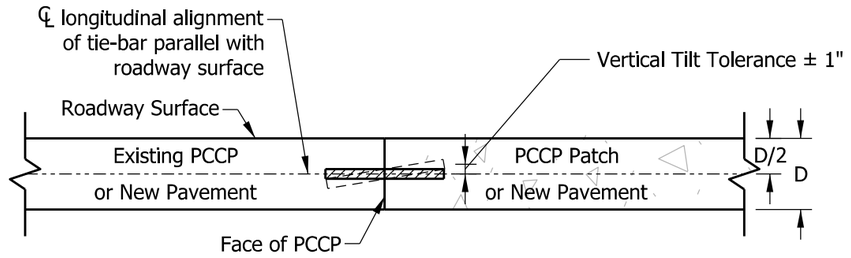

ELEVATION
VERTICAL TILT

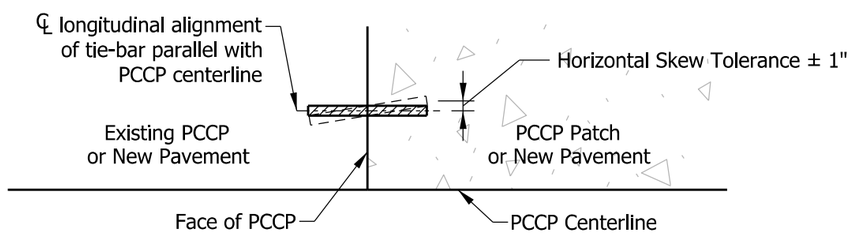

PLAN
HORIZONTAL SKEW

TIE-BAR SIZES FOR TRANSVERSE CONSTRUCTION JOINT		
Pavement Thickness, D	Tie-Bar Size	Min. le (Retrofit)
Less than 9"	#5	1'-0"
9" through 12"	#8	1'-8"
Greater than 12"	#10	2'-0"

INDIANA DEPARTMENT OF TRANSPORTATION

TRANSVERSE CONSTRUCTION JOINT DETAILS

SEPTEMBER 2020

STANDARD DRAWING NO. E 503-CCPJ-04

ELIZABETH W. PHILLIPS
REGISTERED
No. 10200124
STATE OF INDIANA
PROFESSIONAL ENGINEER

03/10/20
DESIGN STANDARDS ENGINEER — DATE

05/08/20
CHIEF ENGINEER — DATE

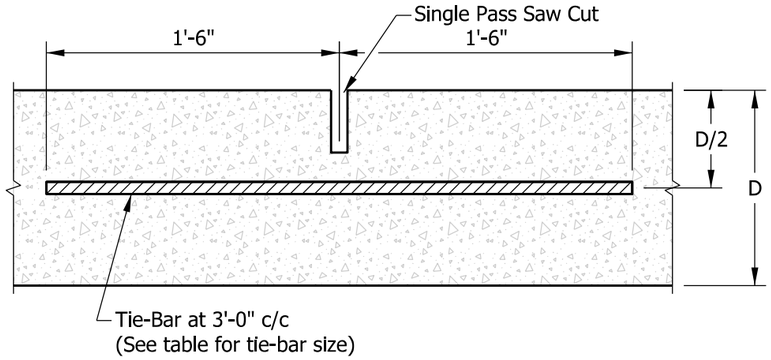

TIE-BAR SIZES FOR LONGITUDINAL JOINT	
Pavement Thickness, D	Tie-Bar Size
Less than or equal to 9"	#5
Greater than 9"	#6

NOTE:

1. Diameter of drilled hole (d) shall be in accordance with the chemical anchor system manufacturer's instructions.
2. For retrofitted tie-bar skew and tilt tolerances see 503-CCPJ-04.

LONGITUDINAL JOINT TRANSVERSE SECTION THROUGH PCCP

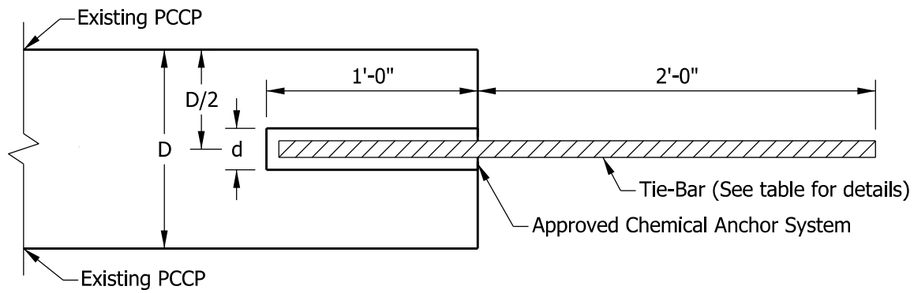

TIE-BAR SIZES FOR LONGITUDINAL CONSTRUCTION JOINTS		
Pavement Thickness, D	Tie-Bar Size	Spacing
Less than 9"	#5	3'-0" c/c
9" through 12"	#6	3'-0" c/c
Greater than 12"	#6 or #7	2'-0" c/c 3'-0" c/c

LONGITUDINAL CONSTRUCTION JOINT TRANSVERSE SECTION THROUGH PCCP (RETROFITTED TIE-BARS)

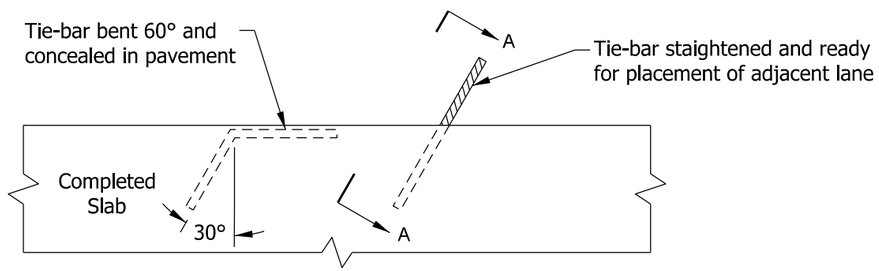

LONGITUDINAL CONSTRUCTION JOINT PLAN VIEW (BENT TIE-BAR PLACED IN PLASTIC CONCRETE)

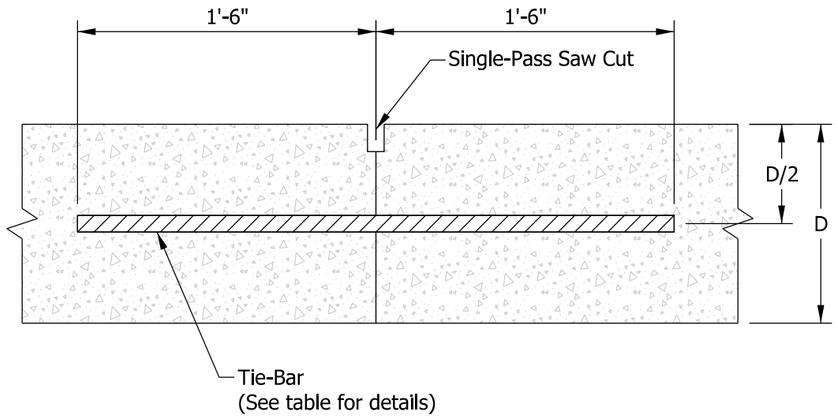

SECTION A-A

INDIANA DEPARTMENT OF TRANSPORTATION

LONGITUDINAL JOINT DETAILS

SEPTEMBER 2020

STANDARD DRAWING NO. E 503-CCPJ-05

03/10/20

DESIGN STANDARDS ENGINEER DATE

05/08/20

CHIEF ENGINEER DATE

INDEX	
SHEET NO.	SUBJECT
1	Concrete Pavement Patching Index and General Notes
2	Tie Bar Alignment and Saw Cut Tolerances
3	Saw Cut Removal Details
4	Retrofit Transverse Joint Details
5	Patch Length ≥ 6' and ≤ 20'
6	Patch Length > 20'

GENERAL NOTES:

1. Tie-bars shall be epoxy coated.
2. Additional preparation of existing subgrade will be determined by the Engineer.
3. See Standard Drawing Series E 503-CCPJ for sawed joint and joint sealant details.
4. See Standard Drawing E 503-CCPJ-03 for D-1 Contraction Joint details.
5. See Standard Drawing E 503-CCPJ-05 for retrofitted tie bar details.
6. The minimum patch length shall be 6 ft.

INDIANA DEPARTMENT OF TRANSPORTATION

CONCRETE PAVEMENT PATCHING
INDEX AND GENERAL NOTES

SEPTEMBER 2026

STANDARD DRAWING NO. E 506-CCPP-01

ELIZABETH P. MOUSER
REGISTERED
No.
10200124
STATE OF
INDIANA
PROFESSIONAL ENGINEER

4/13/2026
DESIGN STANDARDS ENGINEER DATE

04/13/2026
CHIEF ENGINEER DATE

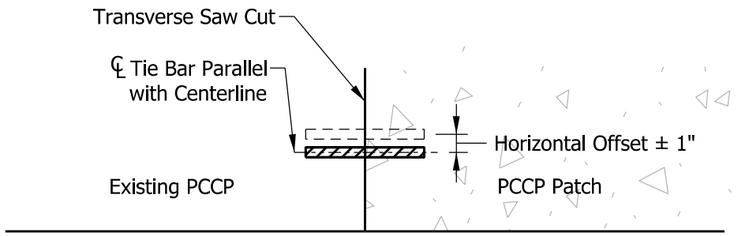

PLAN - HORIZONTAL TRANSLATION

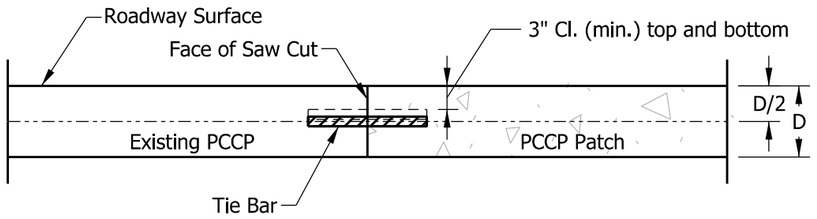

ELEVATION - VERTICAL TRANSLATION

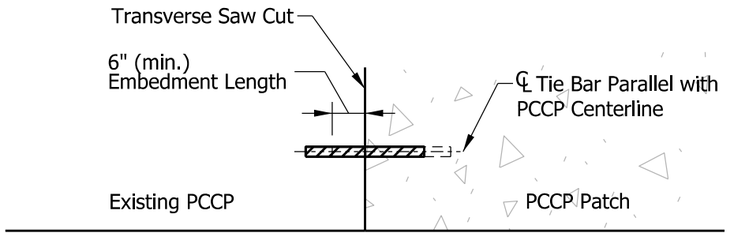

PLAN - LONGTITUDINAL TRANSLATION

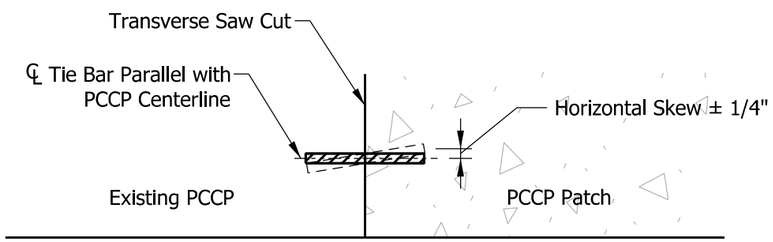

PLAN - HORIZONTAL SKEW

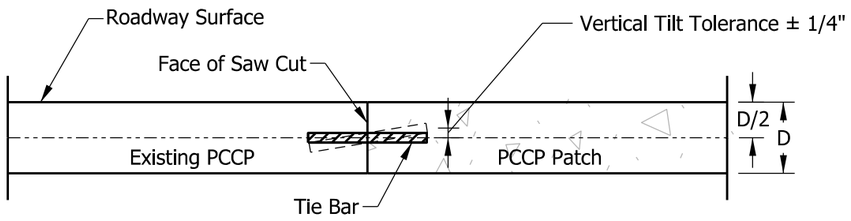

ELEVATION - VERTICAL TILT

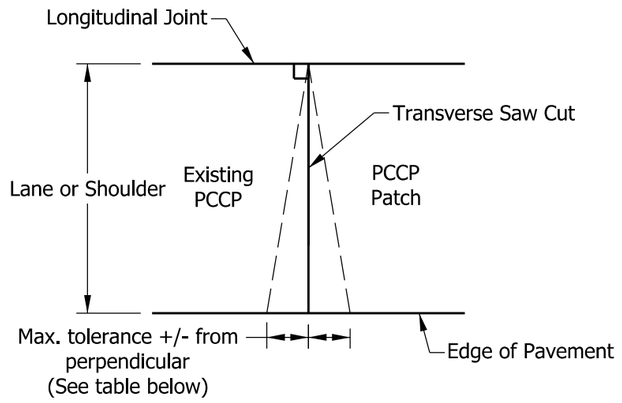

WIDTH OF LANE OR SHOULDER	MAX. TOLERANCE
10'	1 5/8"
12'	2"
14'	2 5/16"

PLAN - SAW CUT

NOTES:

1. Tie bar alignment and saw cut shall be as shown.

LEGEND

D = Existing PCCP Thickness
Mis-Aligned Tie Bar
Properly Aligned Tie Bar

INDIANA DEPARTMENT OF TRANSPORTATION

TIE BAR ALIGNMENT AND SAWCUT TOLERANCES

SEPTEMBER 2026

STANDARD DRAWING NO. E 506-CCPP-02

ELIZABETH P. MOUSER REGISTERED No. 10200124 STATE OF INDIANA PROFESSIONAL ENGINEER

4/13/2026
DESIGN STANDARDS ENGINEER DATE

04/13/2026
CHIEF ENGINEER DATE

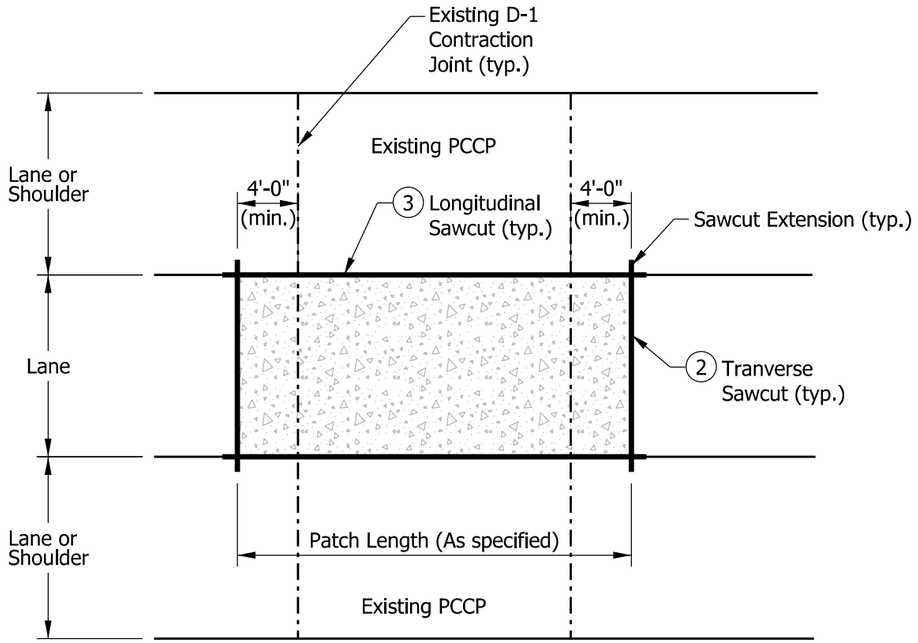

PLAN

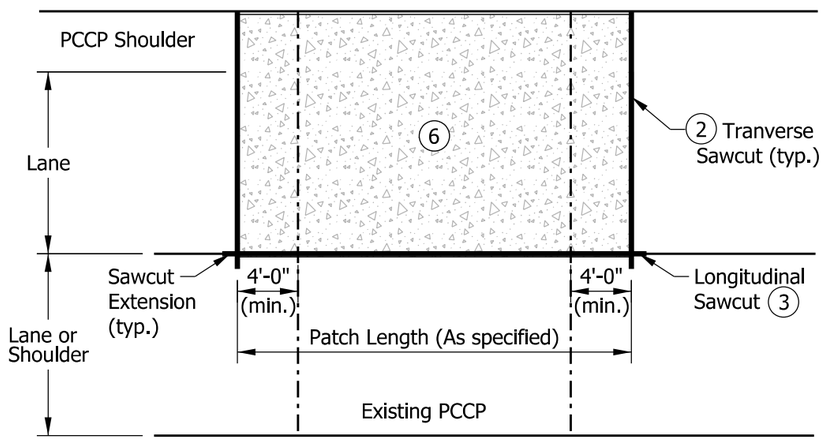

PLAN
(PCCP Shoulders without Longitudinal Joint)

NOTES:

1. The portion of the sawcut that extends into an adjacent lane or shoulder that will remain in place shall be cleaned and sealed with hot-poured joint sealant. Epoxy may be substituted for hot-poured joint sealant, as approved.

(2) Extend transverse sawcut into adjacent PCCP lane or shoulder a maximum 12 in. or as approved to complete a full-depth cut.

(3) Extend longitudinal sawcut beyond the patch a maximum 12 in. or as approved to complete a full depth cut.

4. D-1 Contraction Joint placement and Retrofit Transverse Joint details not shown for clarity.

5. The length of the sawcut extension shall not alter the approved maintenance of traffic configuration.

(6) Where a longitudinal joint is not present between the existing lane and PCCP shoulder, the sawcut and removal shall include the full width of the shoulder.

INDIANA DEPARTMENT OF TRANSPORTATION

SAWCUT REMOVAL DETAILS

SEPTEMBER 2026

STANDARD DRAWING NO. E 506-CCPP-03

ELIZABETH P. MOUSER
REGISTERED
No. 10200124
STATE OF INDIANA
PROFESSIONAL ENGINEER

4/13/2026
DESIGN STANDARDS ENGINEER DATE

04/13/2026
CHIEF ENGINEER DATE

TIE BAR SIZES FOR RETROFIT TRANSVERSE JOINT		
Pavement Thickness, D	Tie Bar Size	Minimum, le
Less than 9"	#5	1'-0"
9" through 12"	#8	1'-0"
Greater than 12"	#10	1'-0"

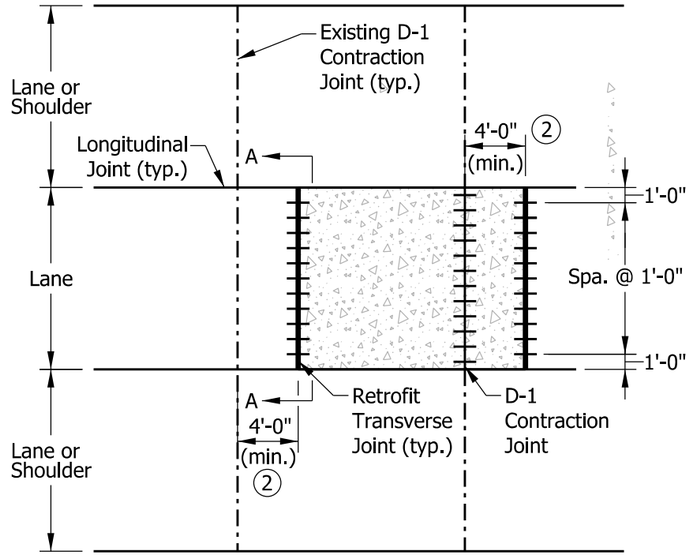

PLAN

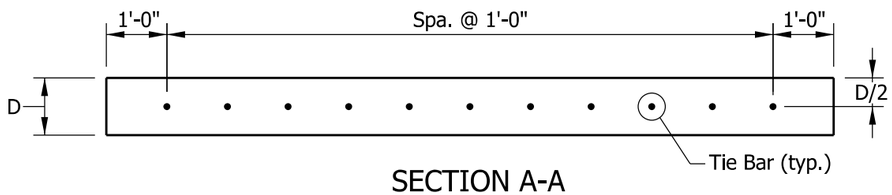

SECTION A-A

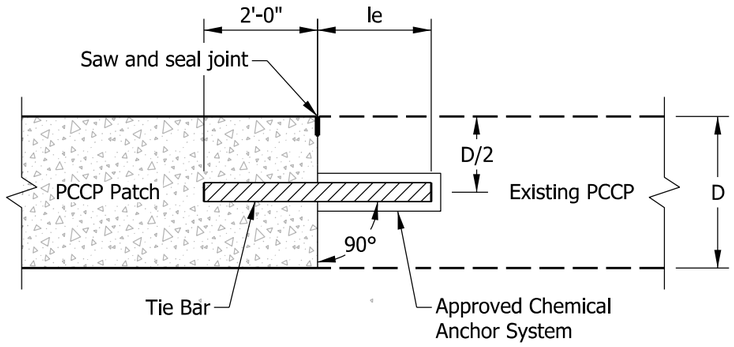

PCCP

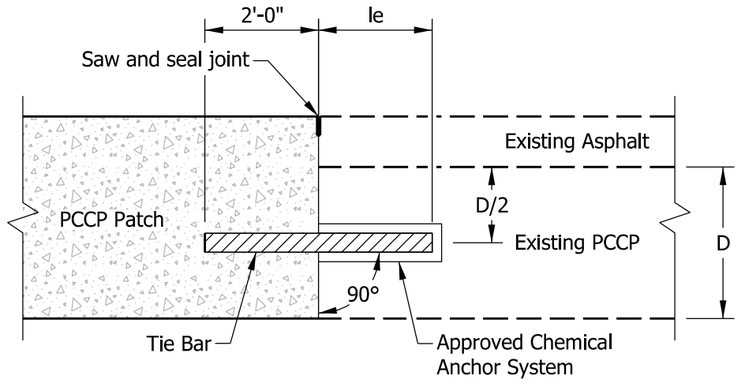

COMPOSITE PAVEMENT

RETROFIT TRANSVERSE JOINT

NOTES:

1. Retrofit Transverse Joint shall be placed at each end of the patch.
2. Retrofit Transverse Joints shall be placed a minimum of 4 ft from an existing D-1 Contraction Joint.
3. Sawing and sealing joints shall be omitted where the concrete patch is to be overlaid with asphalt or concrete.
4. Tie bar size and embedment (le) shall be as shown on table this sheet.

LEGEND

D = Existing PCCP Thickness

INDIANA DEPARTMENT OF TRANSPORTATION

RETROFIT TRANSVERSE JOINT DETAILS

SEPTEMBER 2026

STANDARD DRAWING NO. E 506-CCPP-04

ELIZABETH P. MOUSER
REGISTERED
No.
10200124
STATE OF
INDIANA
PROFESSIONAL ENGINEER

Elizabeth P Mouser 4/13/2026
DESIGN STANDARDS ENGINEER DATE

04/13/2026
CHIEF ENGINEER DATE

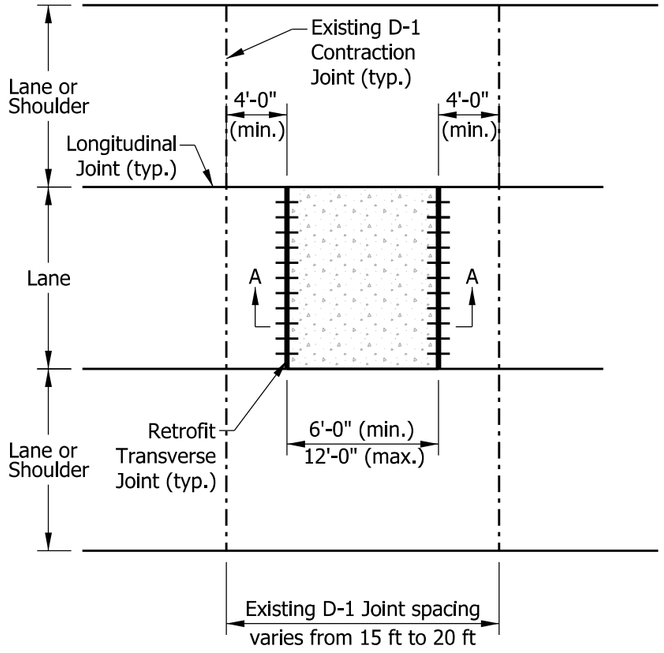

(EXISTING D-1 CONTRACTION JOINTS NOT REMOVED)

PLAN

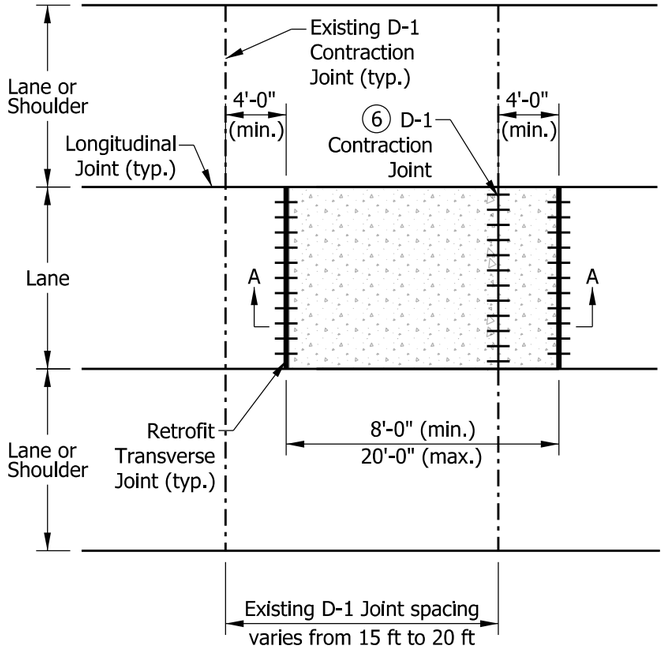

(EXISTING D-1 CONTRACTION JOINT REMOVED)

PLAN

NOTES:

1. Minimum and maximum patch lengths based on existing D-1 Contraction Joint spacing and minimum 4 ft distance to Retrofit Transverse Joint.
2. For patch lengths 6 ft or greater and less than 20 ft, tie bars shall not be placed at longitudinal joints.
3. Where the distance from an existing D-1 Contraction Joint to the end of the patch is less than 4 ft, the patch length shall be extended until the minimum distance is satisfied. Where extending the patch results in a patch length greater than 20 ft, use detail on Standard Drawing E 506-CCPP-06.
4. See Standard Drawing E 506-CCPP-04 for transverse tie bar spacing.
5. Where the patch length is 12 ft or less and the existing D-1 Contraction Joint has not been removed, a D-1 Contraction shall not be placed.

(6) Where the patch length is between 8 ft and 20 ft and the existing D-1 Contraction Joint has been removed, a D-1 Contraction Joint shall be placed as shown.

(COMPOSITE PAVEMENT SHOWN)

(PCCP SHOWN)

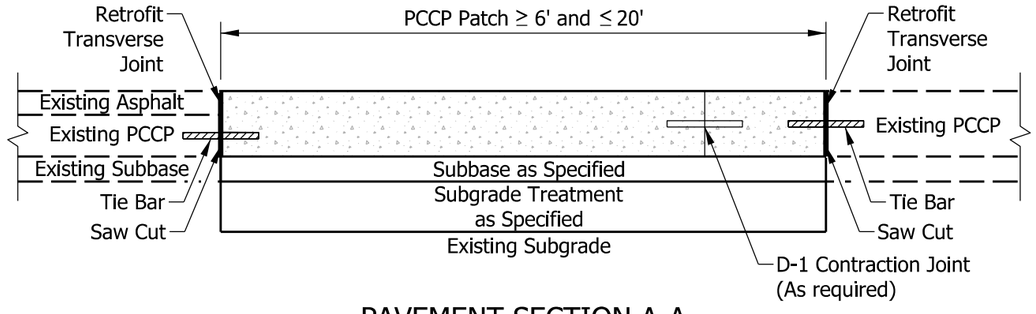

PAVEMENT SECTION A-A

INDIANA DEPARTMENT OF TRANSPORTATION

PATCH LENGTH ≥ 6' AND ≤ 20'

SEPTEMBER 2026

STANDARD DRAWING NO. E 506-CCPP-05

ELIZABETH P. MOUSER
REGISTERED
No. 10200124
STATE OF INDIANA
PROFESSIONAL ENGINEER

4/13/2026
DESIGN STANDARDS ENGINEER DATE

04/13/2026
CHIEF ENGINEER DATE

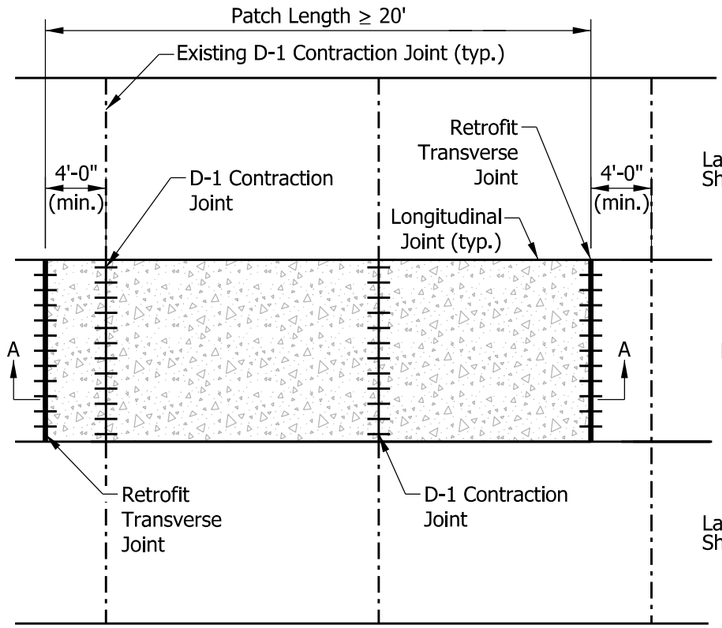

PLAN

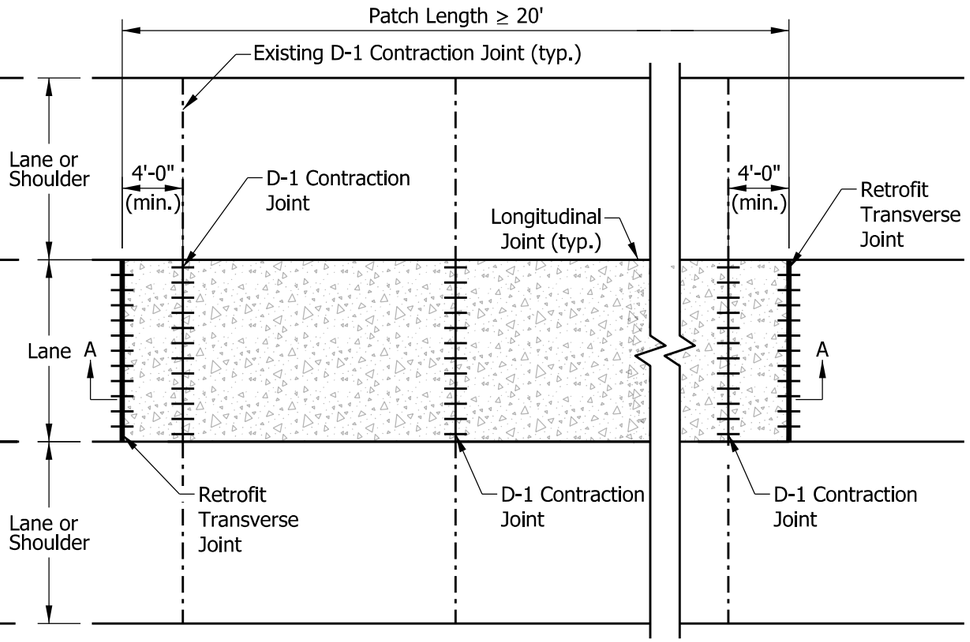

PLAN

NOTES:

1. D-1 Contraction Joints shall be matched with spacing of the existing D-1 Contraction Joints of adjacent lane or shoulder PCCP.
2. For composite pavement, the PCCP patch D-1 Contraction Joints shall be placed with a maximum spacing of 16 ft, if contraction joints are not apparent in the adjacent lane or shoulder.
3. For a patch length greater than 100 ft, longitudinal retrofitted tie bars shall be required and installed as shown on Standard Drawing E 503-CCPJ-02.
4. See Standard Drawing E 506-CCPP-04 for tie bar spacing.

(COMPOSITE PAVEMENT SHOWN)

(PCCP SHOWN)

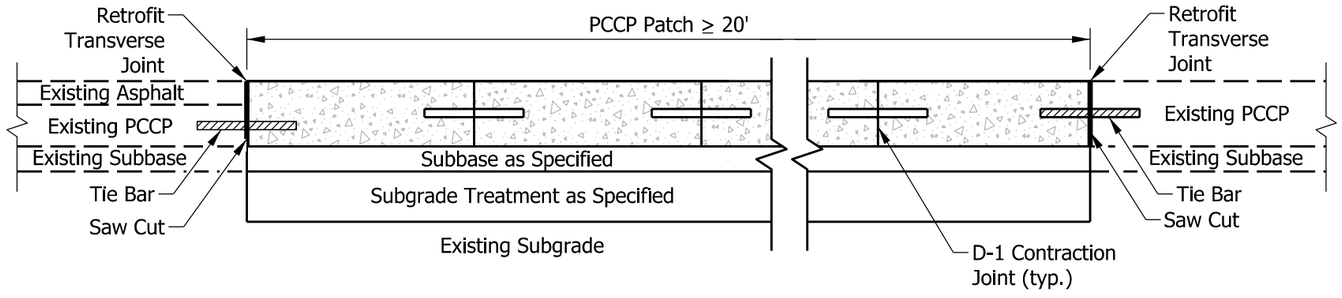

PAVEMENT SECTION A-A

INDIANA DEPARTMENT OF TRANSPORTATION

PATCH LENGTH > 20'

SEPTEMBER 2026

STANDARD DRAWING NO. E 506-CCPP-06

ELIZABETH P. MOUSER REGISTERED No. 10200124 STATE OF INDIANA PROFESSIONAL ENGINEER

4/13/2026

DESIGN STANDARDS ENGINEER DATE

04/13/2026

CHIEF ENGINEER DATE

NOTES:

1. For dowel slot layout requirements, see Standard Drawing E 507-RLTC-02.

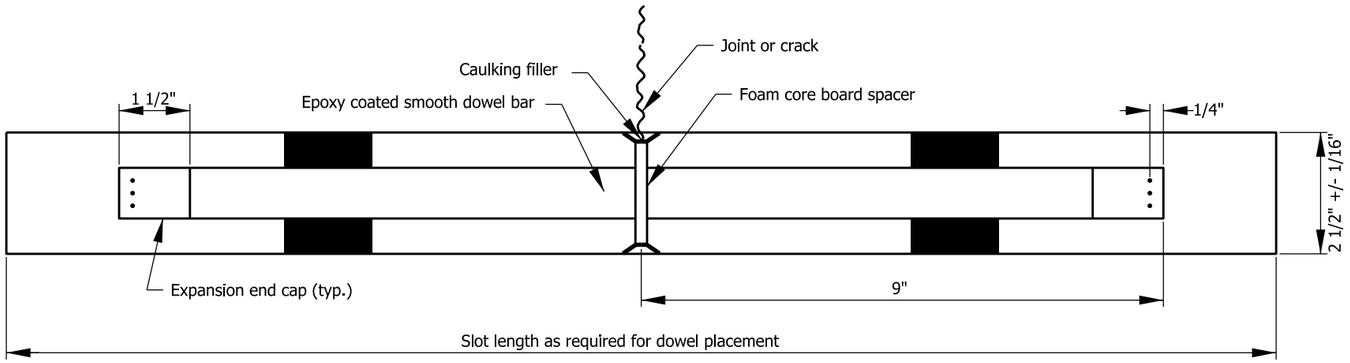

PLAN

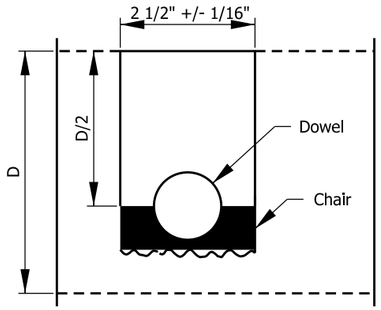

SECTION A-A

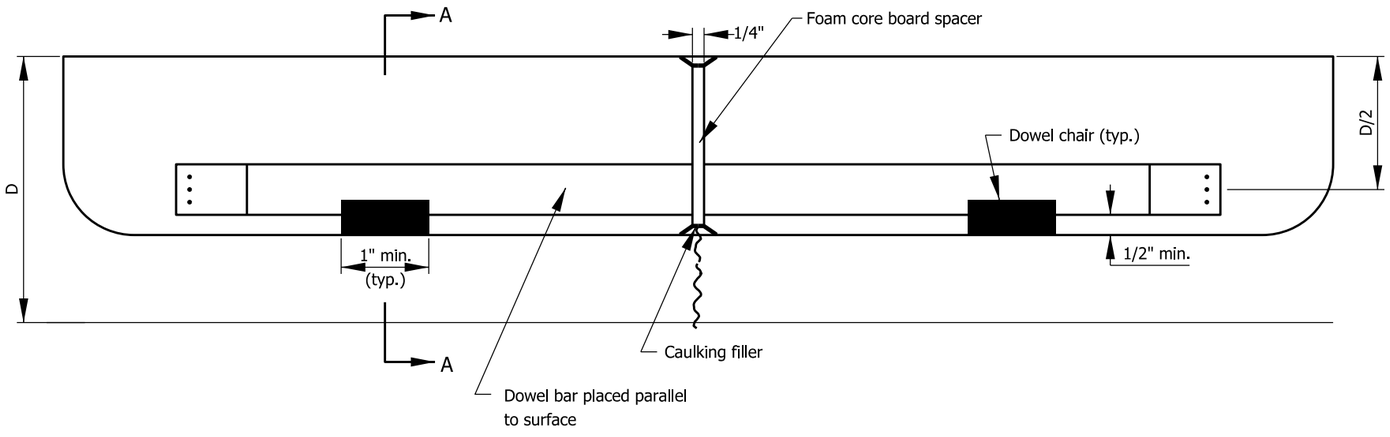

ELEVATION

DOWEL SLOT DETAILS

DOWEL BAR SIZES	
Pavement Thickness D	Minimum Dowel Bar Diameter
Less than 12"	1 ¼"
Greater than or equal to 12"	1 ½"

INDIANA DEPARTMENT OF TRANSPORTATION

RETROFIT LOAD
TRANSFER FOR PCCP

SEPTEMBER 2004

STANDARD DRAWING NO. E 507-RLTC-01

RICHARD L. VanCLEAVE REGISTERED No. 9750 STATE OF INDIANA PROFESSIONAL ENGINEER

/s/ Richard L. VanCleave 09/01/04
DESIGN STANDARDS ENGINEER DATE

/s/ Richard K. Smutzer 09/01/04
CHIEF ENGINEER DATE

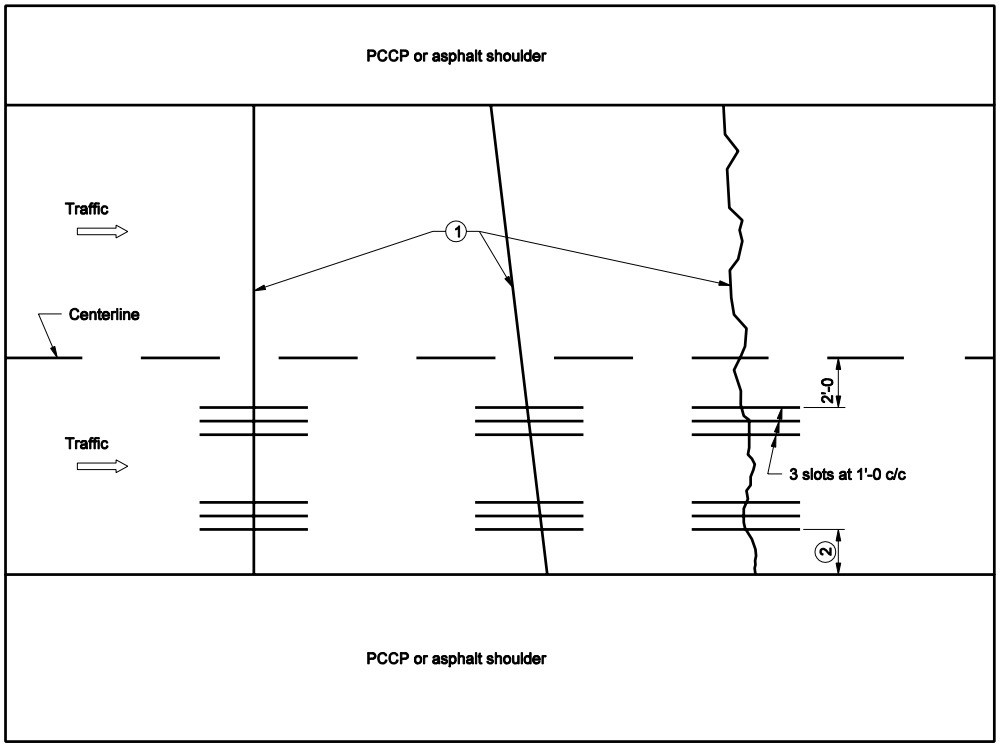

NOTES:

1. PCCP retrofit load transfer may be utilized at perpendicular joints, skewed joints, or at random cracks.
2. If lane width is 12 ft, use 3' offset. If lane width is 14 ft. use 4' offset.
3. Dowel slots shall be constructed parallel to pavement centerline.

INDIANA DEPARTMENT OF TRANSPORTATION

RETROFIT LOAD TRANSFER FOR LOAD

SEPTEMBER 2004

STANDARD DRAWING NO. E 507-RLTC-02

RICHARD L. VanCLEAVE REGISTERED No. 9750 STATE OF INDIANA PROFESSIONAL ENGINEER

DESIGN STANDARDS ENGINEER

/s/ Richard L. VanCleave 9-01-04
DESIGN STANDARDS ENGINEER DATE

/s/ Richard K. Smutzer 9-01-04
CHIEF HIGHWAY ENGINEER DATE

INDEX	
SHEET NO.	SUBJECT
1	Joint Repair Index and General Notes
2	Longitudinal Joint Repair, Partial Depth
3	Transverse Joint Repair, Partial Depth
4	Joint Repair, Bottom-Half

GENERAL NOTES:

1. Tie-bars shall be epoxy coated.
2. Remove top 2 in. of unsound concrete by milling (typical) or by chipping hammer. Any wire mesh exposed during JRCP repairs shall be completely removed.
3. Remove unsound concrete below milling depth by chipping hammer.
4. Chipping hammers shall not be heavier than a nominal 35 lb class.
5. Surfaces of all repairs shall be properly cleaned and prepared prior to placing concrete.

INDIANA DEPARTMENT OF TRANSPORTATION

JOINT REPAIR
INDEX AND GENERAL NOTES

SEPTEMBER 2021

STANDARD DRAWING NO. E 509-CCJR-01

JEREMY C. HUNTER
REGISTERED
No.
PE10505669
STATE OF
INDIANA
PROFESSIONAL ENGINEER

Jeremy C Hunter 2/11/2021
DESIGN STANDARDS ENGINEER DATE

2/11/2021
CHIEF ENGINEER DATE

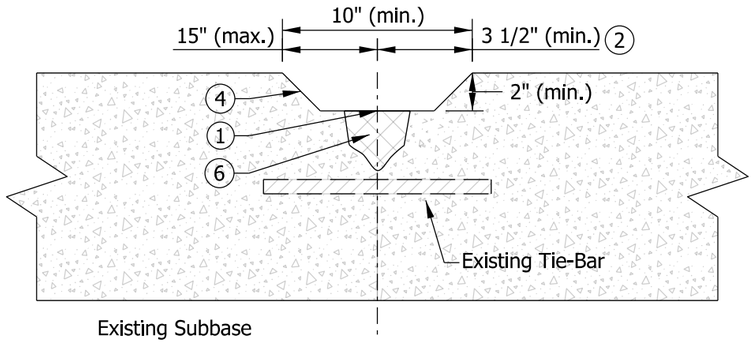

REMOVAL DETAIL STRADDLING JOINT
WITHOUT EXPOSED TIE-BAR

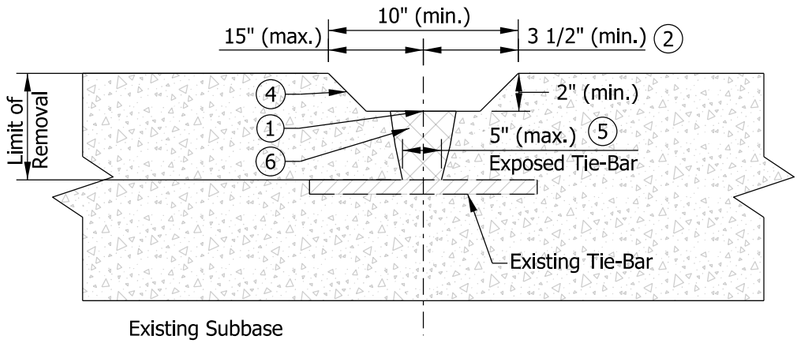

REMOVAL DETAIL STRADDLING JOINT
WITH EXPOSED TIE-BAR

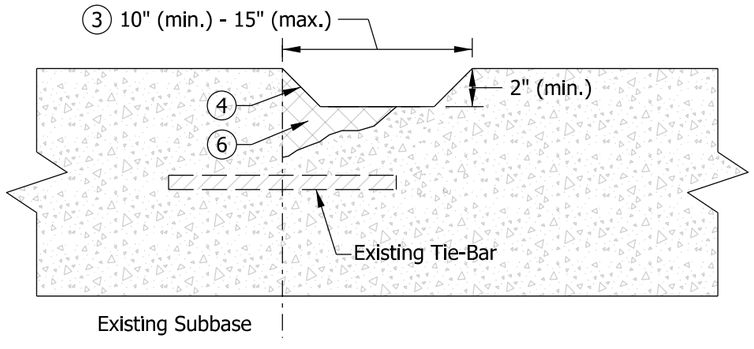

REMOVAL DETAIL ADJACENT TO JOINT
WITHOUT EXPOSED TIE-BAR

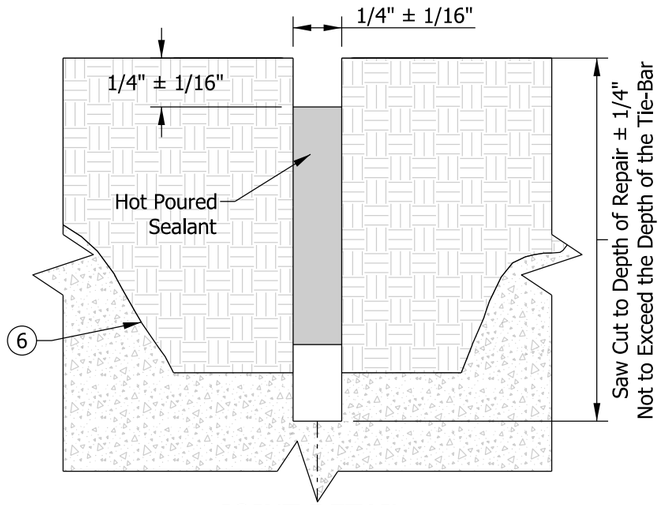

JOINT DETAIL-
SAW CUT OPTION

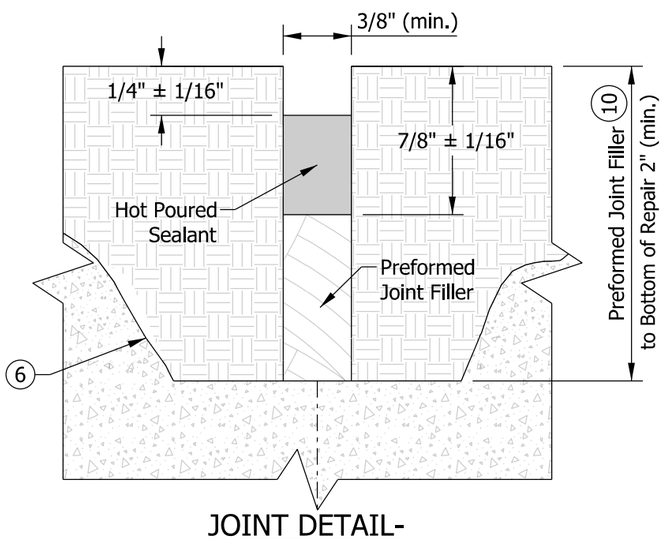

JOINT DETAIL-
PREFORMED JOINT FILLER OPTION
(Final Configuration)

NOTES:

(1) Joint shall be reestablished by either preformed joint filler or saw cut option with tooling.

(2) Repairs that involve both sides of the joint shall have at least 3 1/2 in. of milling width on both sides of the joint. The overall milling width shall be at least 10 in.

(3) Repairs that only involve one side of the joint shall have at least 10 in. of milling width, as measured from the joint, and shall not disturb the concrete in the adjacent slab.

(4) Sides of repair shall be tapered 30° - 60° from vertical.

(5) Full depth patching shall be used where the width of unsound concrete at the depth of the tie-bar exceeds 5 in.

(6) 2 in. minimum milling shown, additional hand chipping may be required to remove unsound concrete.

7. Existing tie-bars exposed after removal shall be removed to the face of existing concrete. For tie-bar tolerance, see Standard Drawing Series E 503-CCPJ.

8. Any voids resulting from hand chipping that extend below the tie-bars may be filled with repair concrete. Removal of the unsound concrete below the elevation of the tie-bars is not intended.

9. Repairs shall be terminated 12 in. or more from a transverse joint.

(10) Preformed Joint Filller initially installed to top of repair. A portion shall be sawed out to create reservoir for hot pour sealant.

LEGEND

New Concrete

Unsound Concrete

Exisiting Concrete

INDIANA DEPARTMENT OF TRANSPORTATION

LONGITUDINAL JOINT REPAIR,
PARTIAL DEPTH

SEPTEMBER 2021

STANDARD DRAWING NO. E 509-CCJR-02

JEREMY C. HUNTER
REGISTERED
No.
PE10505669
STATE OF
INDIANA
PROFESSIONAL ENGINEER

Jeremy C Hunter 2/11/2021
DESIGN STANDARDS ENGINEER DATE

2/11/2021
CHIEF ENGINEER DATE

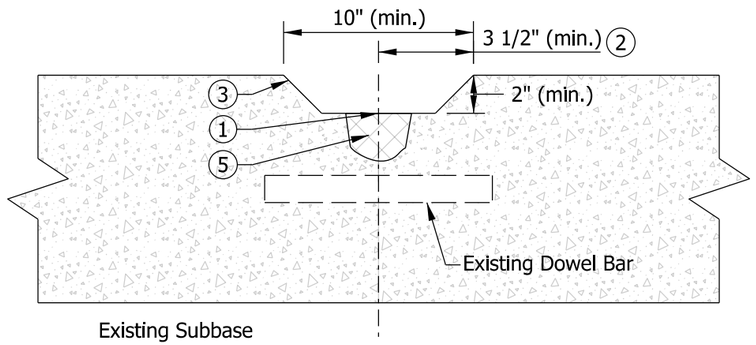

REMOVAL DETAIL WITHOUT EXPOSED DOWEL BAR STRADDLING JOINT

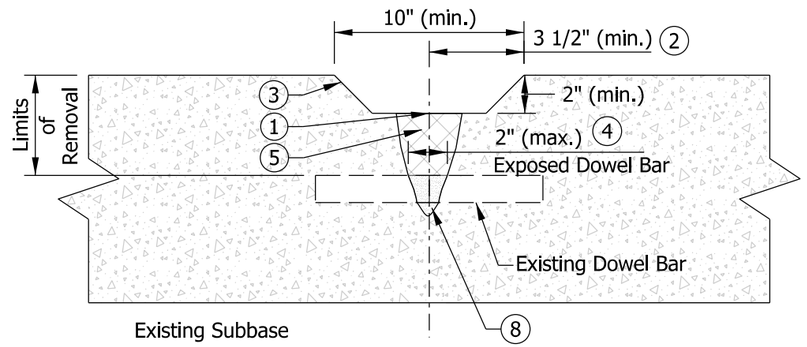

REMOVAL DETAIL WITH EXPOSED DOWEL BAR STRADDLING JOINT

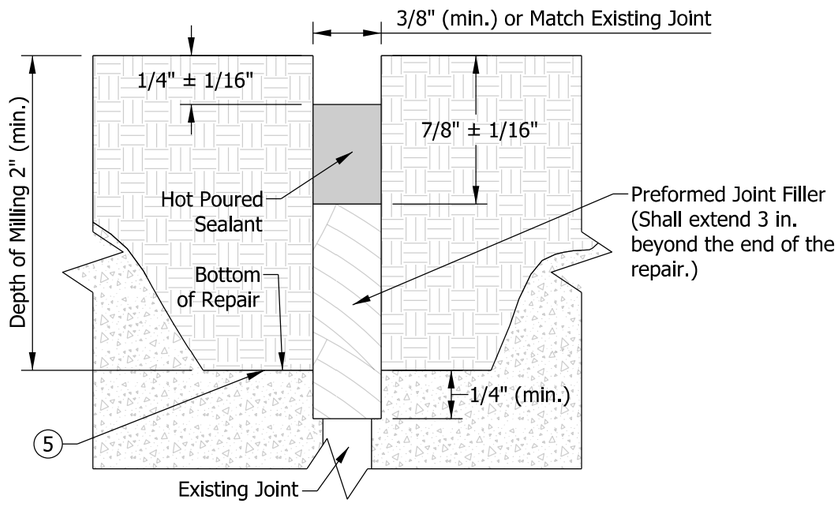

JOINT REPAIR DETAILS
(showing repair straddling joint)

NOTES:

1. Joints shall be reestablished by installing 3/8 in. preformed joint filler prior to concrete placement.
2. Repairs that involve both sides of the joint shall have at least 3 1/2 in. of milling width on both sides of the joint. The overall milling width shall be at least 10 in.
3. Sides of repair shall be tapered 30° - 60° from vertical.
4. Full depth patching shall be used where the width of unsound concrete at the depth of the tie-bar exceeds 2 in.
5. 2 in. minimum milling shown, additional hand chipping may be required to remove unsound concrete.
6. Existing dowel bars exposed after removal that are either misaligned or severely corroded shall be removed to the face of existing concrete. For dowel bar tolerance, see Standard Drawing Series E 503-CCPJ.
7. Exposed areas of dowel bars shall be covered with duct tape as a bond breaker.
8. Any voids resulting from hand chipping that extend below the elevation of the top of the dowel bars shall be filled with dry clean sand. Removal of the unsound concrete below the elevation of the top of the dowel bars is not intended.
9. Joint repairs shall not terminate within a wheel path. Where existing deterioration exists within a wheel path, the limits of the repair should extend to the edge or center of the lane.

LEGEND

Sand
New Concrete
Unsound Concrete
Exisiting Concrete

INDIANA DEPARTMENT OF TRANSPORTATION

TRANSVERSE JOINT REPAIR,
PARTIAL DEPTH

SEPTEMBER 2021

STANDARD DRAWING NO. E 509-CCJR-03

JEREMY C. HUNTER
REGISTERED
No.
PE10505669
STATE OF
INDIANA
PROFESSIONAL ENGINEER

Jeremy C Hunter 2/11/2021
DESIGN STANDARDS ENGINEER DATE

2/11/2021
CHIEF ENGINEER DATE

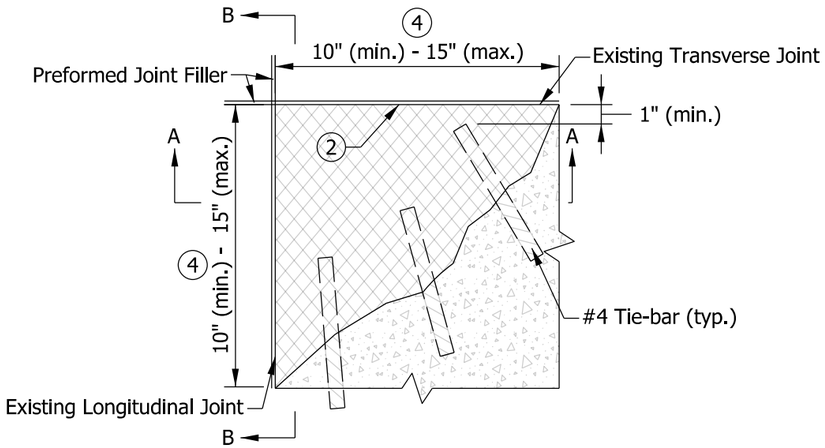

CORNER SLAB REPAIR - PLAN VIEW

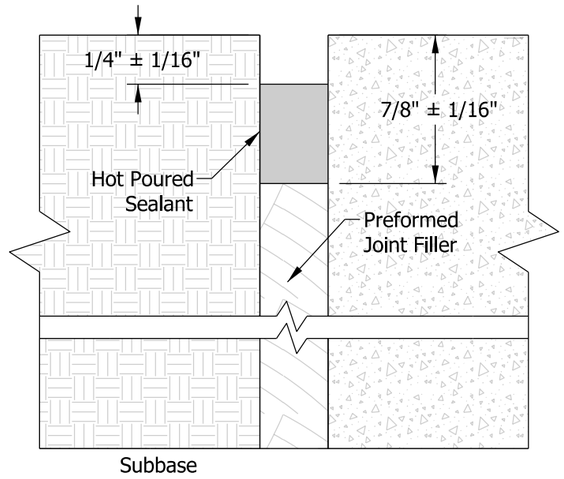

SECTION B-B

(showing repaired concrete)

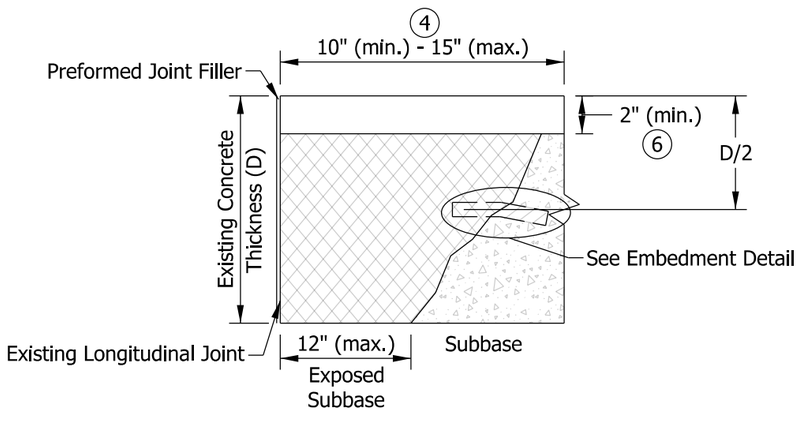

SECTION A-A

(showing concrete removal)

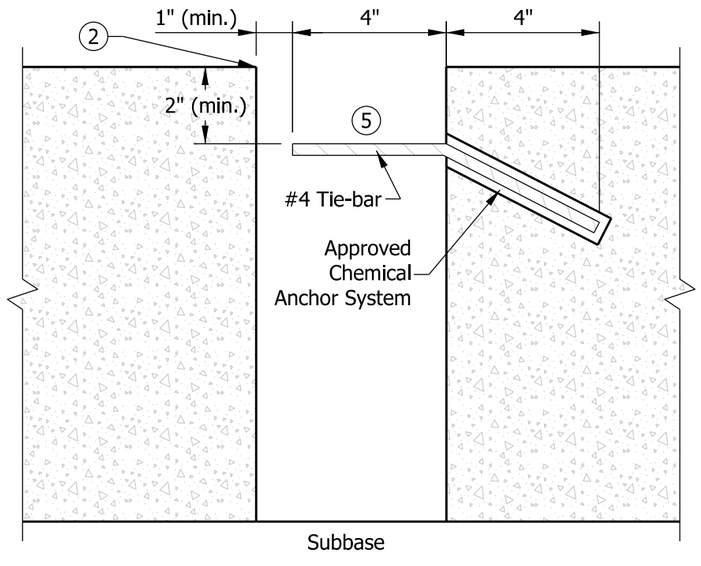

EMBEDMENT DETAIL

NOTES:

1. #4 tie-bars shall be installed at 6 in. spacing, center to center while maintaining a minimum 2 in. of cover and 1 in. of clearance from the vertical sides of the joint.

(2) Joints shall be reestablished by installing full depth preformed expansion joint filler to match the existing transverse joint prior to concrete placement.

3. Area for joint repair, bottom-half will be measured at D/2.

(4) 15 in. maximum or as approved by the Engineer.

(5) #4 tie-bars may be installed at an angle to clear the adjacent existing concrete, but shall be field bent horizontal prior to installation.

(6) Pay limits for partial depth joint repair.

LEGEND

Unsound Concrete

New Concrete

Exisiting Concrete

INDIANA DEPARTMENT OF TRANSPORTATION

JOINT REPAIR,
BOTTOM-HALF

SEPTEMBER 2021

STANDARD DRAWING NO. E 509-CCJR-04

JEREMY C. HUNTER
REGISTERED
No.
PE10505669
STATE OF
INDIANA
PROFESSIONAL ENGINEER

Jeremy C Hunter 2/11/2021
DESIGN STANDARDS ENGINEER DATE

2/11/2021
CHIEF ENGINEER DATE

TABLE CWGS-1	
A	GUARDRAIL TRANSITION
< 25'	Type WGB
≥ 25'	Type TGB

NOTES:

1. See Standard Drawing E 601-CWGS-03 for General Notes.

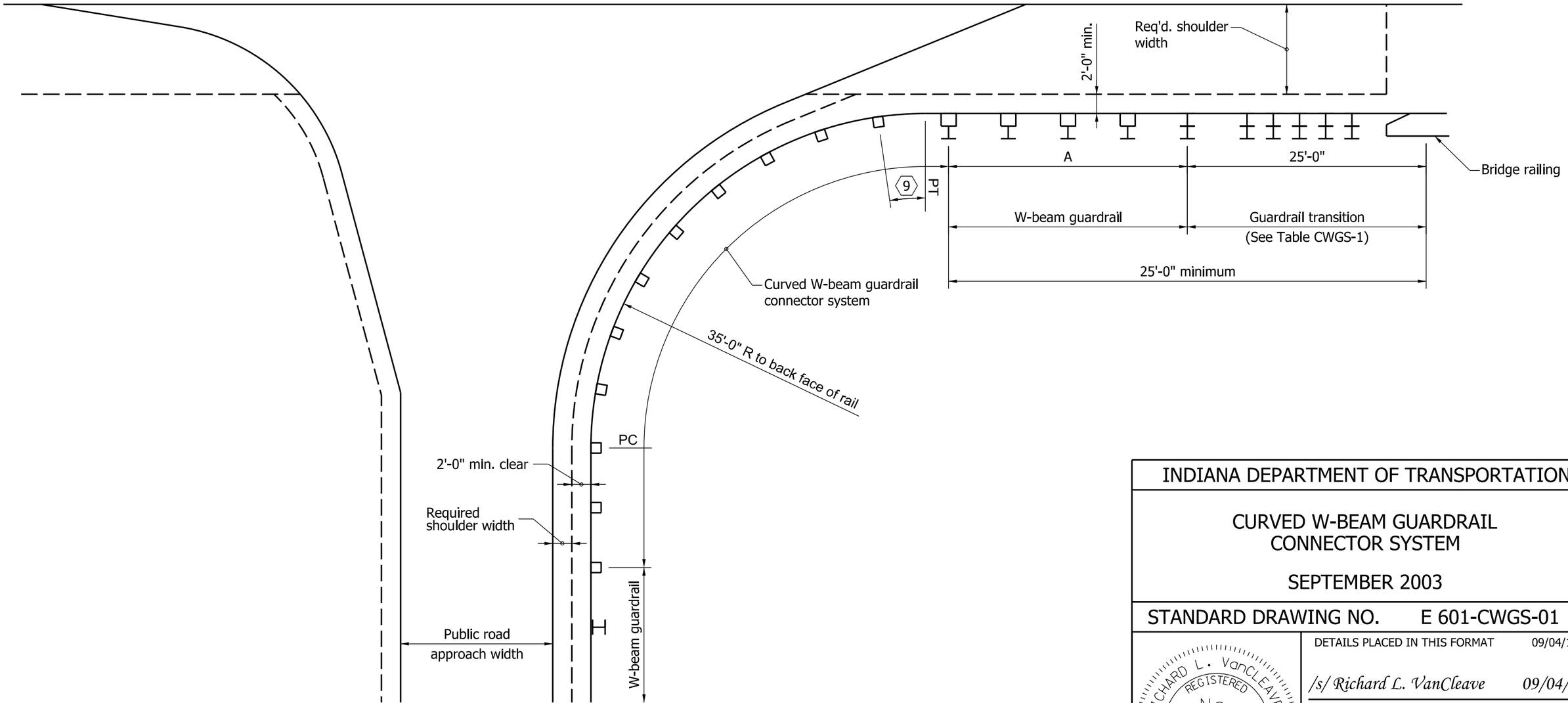

PUBLIC ROAD APPROACH INSTALLATION
AT BRIDGE END

INDIANA DEPARTMENT OF TRANSPORTATION

CURVED W-BEAM GUARDRAIL
CONNECTOR SYSTEM

SEPTEMBER 2003

STANDARD DRAWING NO. E 601-CWGS-01

RICHARD L. VanCLEAVE REGISTERED No. 9750 STATE OF INDIANA PROFESSIONAL ENGINEER

DETAILS PLACED IN THIS FORMAT 09/04/12

/s/ Richard L. VanCleave 09/04/12
SUPERVISOR, ROADWAY STANDARDS DATE

/s/ Mark A. Miller 09/04/12
CHIEF ENGINEER DATE

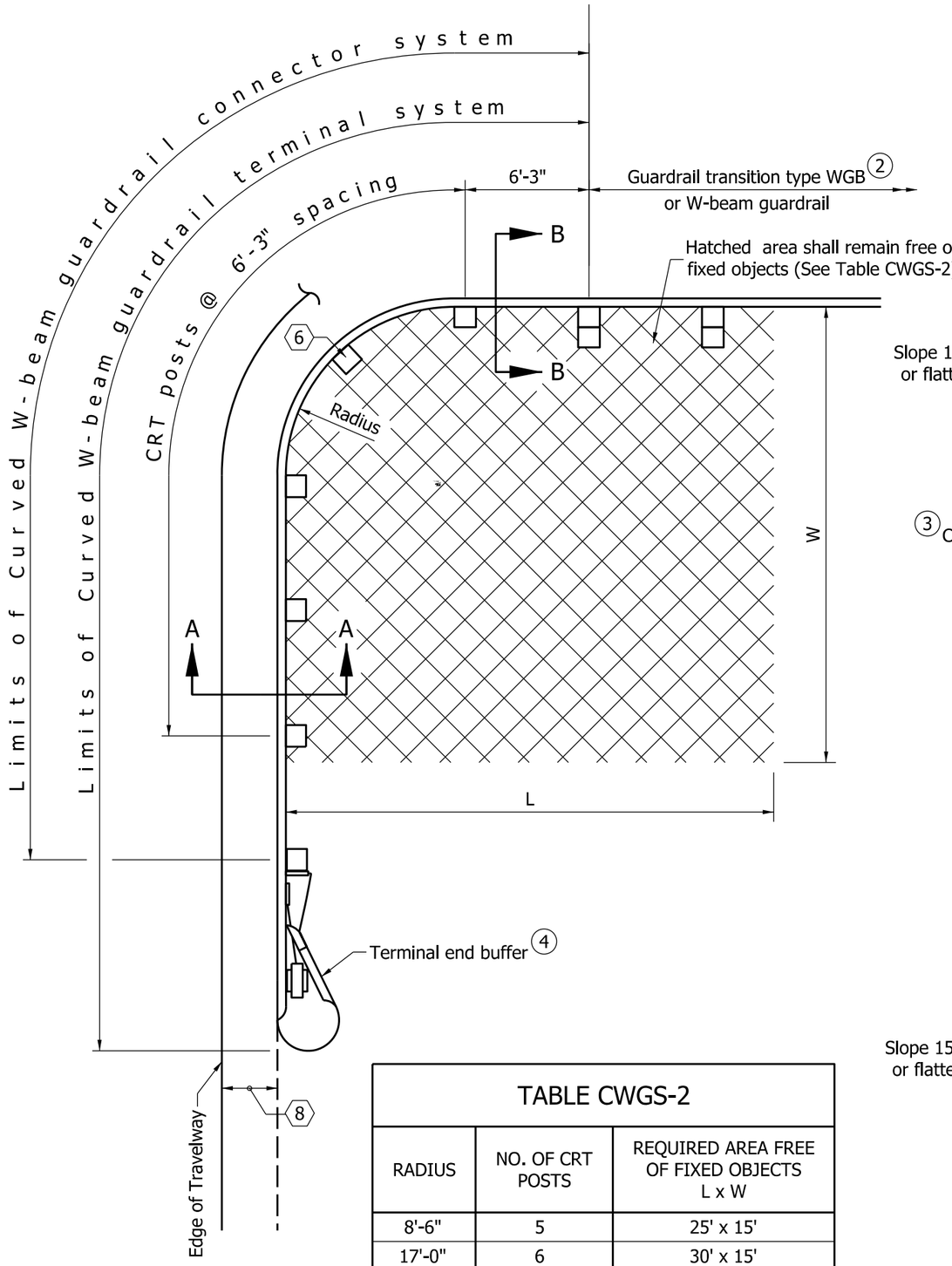

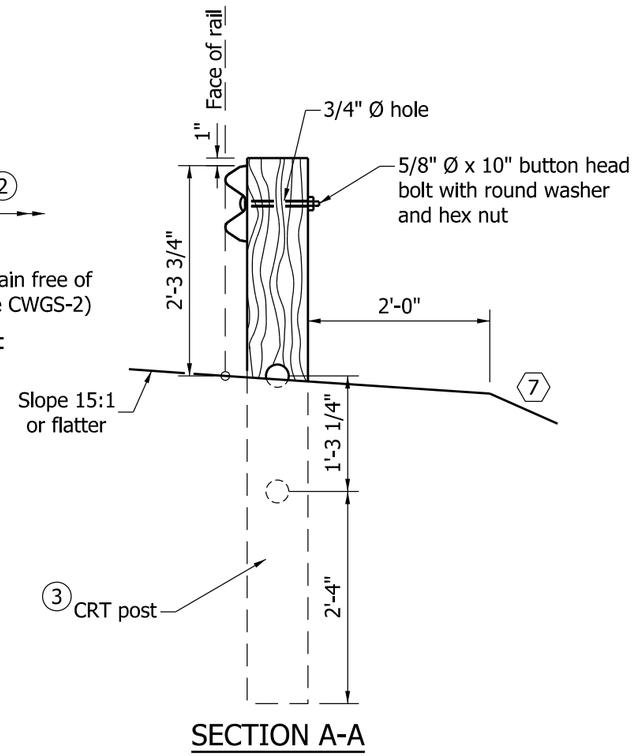

SECTION A-A

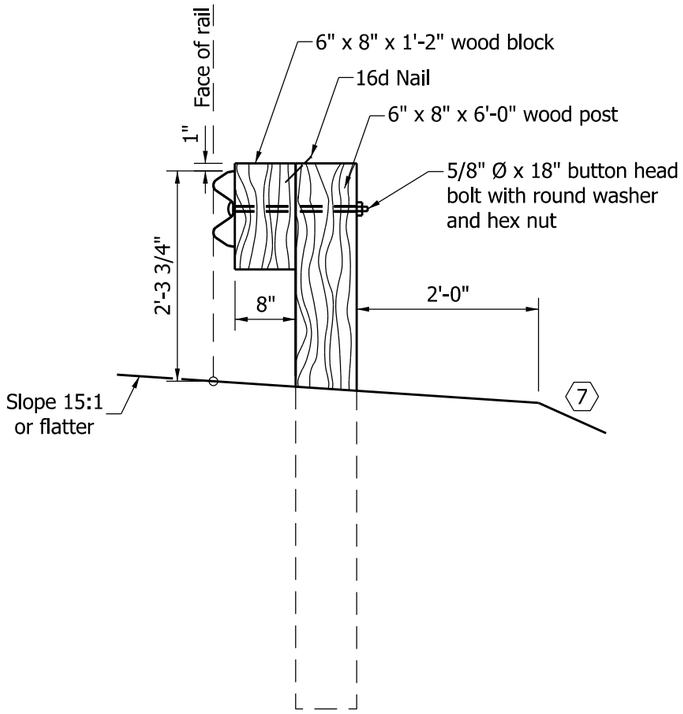

SECTION B-B

TABLE CWGS-2		
RADIUS	NO. OF CRT POSTS	REQUIRED AREA FREE OF FIXED OBJECTS L x W
8'-6"	5	25' x 15'
17'-0"	6	30' x 15'
25'-6"	8	40' x 20'
35'-0"	11	50' x 20'

NOTES:

1. See Standard Drawing E 601-CWGS-03 for General Notes.
2. See Standard Drawing E 601-TWGB-02 for guardrail transition type WBG details.
3. See Standard Drawing E 601-CWGS-06 for CRT post details.
4. See Standard Drawing E 601-CWGS-04 and 05 for terminal end buffer details.

INDIANA DEPARTMENT OF TRANSPORTATION

CURVED W-BEAM GUARDRAIL SYSTEM

SEPTEMBER 2011

STANDARD DRAWING NO. E 601-CWGS-02

RICHARD L. VanCLEAVE REGISTERED No. 9750 STATE OF INDIANA PROFESSIONAL ENGINEER

DETAILS PLACED IN THIS FORMAT 09/04/12

/s/ Richard L. Van Cleave 09/04/12

SUPERVISOR, ROADWAY STANDARDS DATE

/s/ Mark A. Miller 09/04/12

CHIEF ENGINEER DATE

GENERAL NOTES

1. This drawing shall be used in conjunction with Standard Drawings E 601-CWGS-01 through -06, and E 601-CWGT-01 and -02 where a curved W-beam guardrail system is specified.

2. The type of curved W-beam guardrail system to be used shall be as shown on the plans in accordance with Table CWGS-3.

3. Except where otherwise shown, all hardware and installation shall be the same as for the guardrail specified for the adjacent run.

4. A curved W-beam guardrail terminal system shall be used to terminate a run of guardrail only at a driveway. For a public road approach, a curved W-beam guardrail connector system shall be used.

5. A maximum of two guardrail panels may be omitted from the curved W-beam guardrail terminal system only where the bridge railing falls outside of the clear zone and the plans specifically state that panels are to be omitted. See Table CWGS-03 for the number of guardrail panels to be removed for each type of curved W-beam guardrail system.

〈6〉 For the 8'-6" radius curved W-beam guardrail terminal system, guardrail shall not be bolted to this post.

〈7〉 The embankment slope behind the curved W-beam guardrail system shall be 2:1 or flatter.

〈8〉 A minimum 4 ft width shoulder shall be used with a 15 ft minimum drive radius.

〈9〉 This dimension shall be 5 ft for the 35 ft radius curved W-beam guardrail connector system.

TABLE CWGS-3

CURVED W-BEAM GUARDRAIL SYSTEMS

TYPE	RADIUS	NUMBER OF 6'-3" PANELS REMOVED
TERMINAL SYSTEM		
1	8'-6"	0
2	8'-6"	1
3	8'-6"	2
4	17'-0"	0
5	17'-0"	1
6	17'-0"	2
7	25'-0"	0
8	25'-0"	1
9	25'-0"	2
CONNECTOR SYSTEM		
1	25'-0"	0
2	35'-0"	0

INDIANA DEPARTMENT OF TRANSPORTATION

CURVED W-BEAM
GUARDRAIL SYSTEM

SEPTEMBER 1999

STANDARD DRAWING NO. E 601-CWGS-03

RICHARD L. VanCLEAVE REGISTERED No. 9750 STATE OF INDIANA PROFESSIONAL ENGINEER

DETAILS PLACED IN THIS FORMAT 09/04/12

/s/ Richard L. VanCleave 09/04/12
SUPERVISOR, ROADWAY STANDARDS DATE

/s/ Mark A. Miller 09/04/12
CHIEF ENGINEER DATE

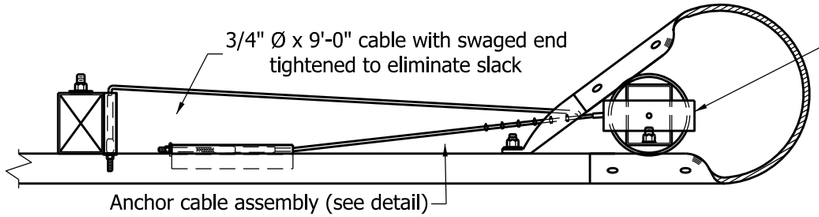

PLAN

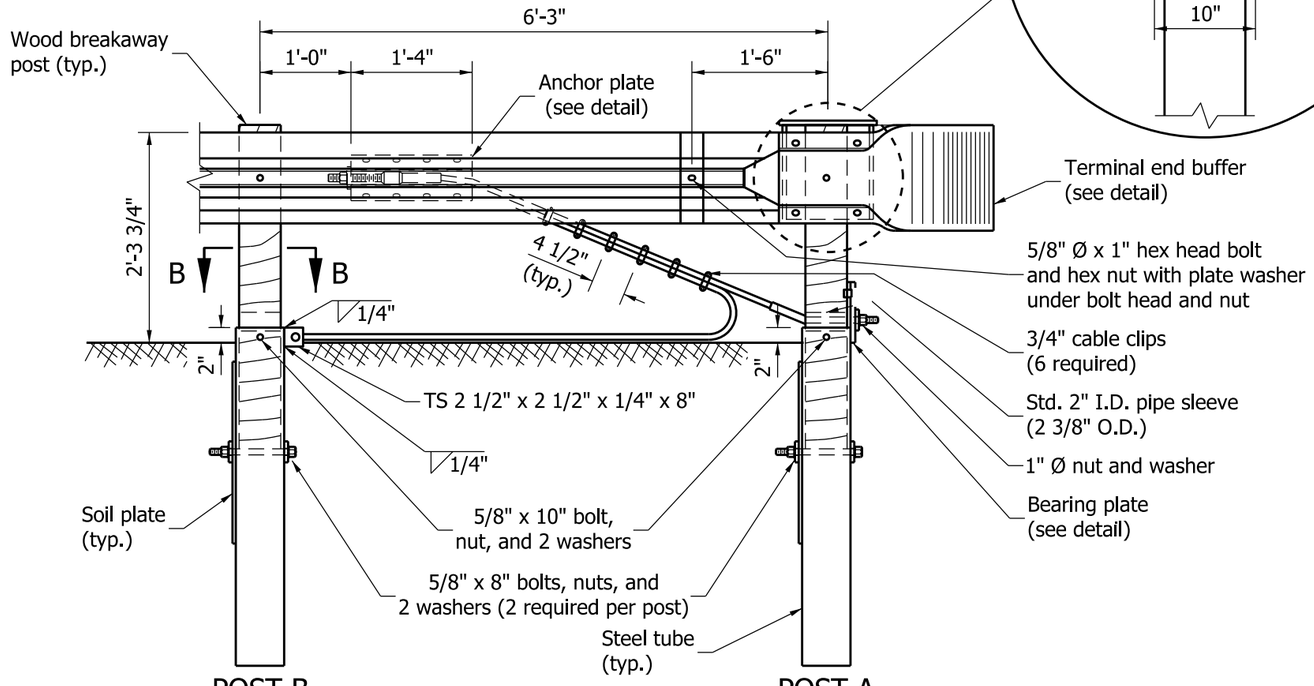

POST B

TYPE 5 ANCHOR ELEVATION

POST A

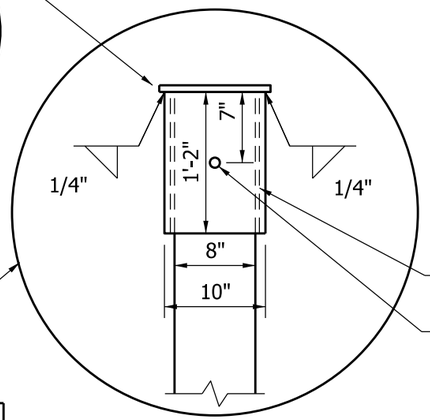

NOTES:

1. One 5/8" Ø x 10" bolt with nut and washer is required per curved W-beam steel tube and post.
2. Plate washers shall be used only where indicated.

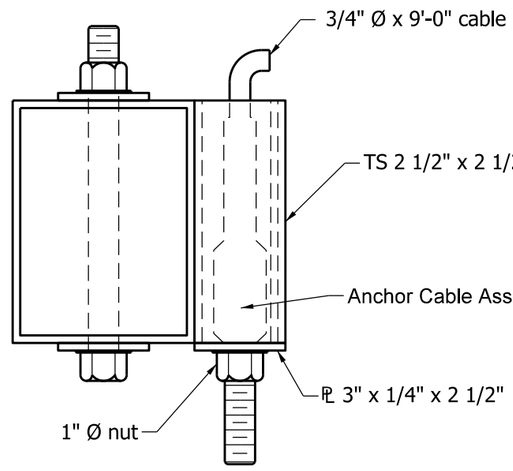

SECTION B-B

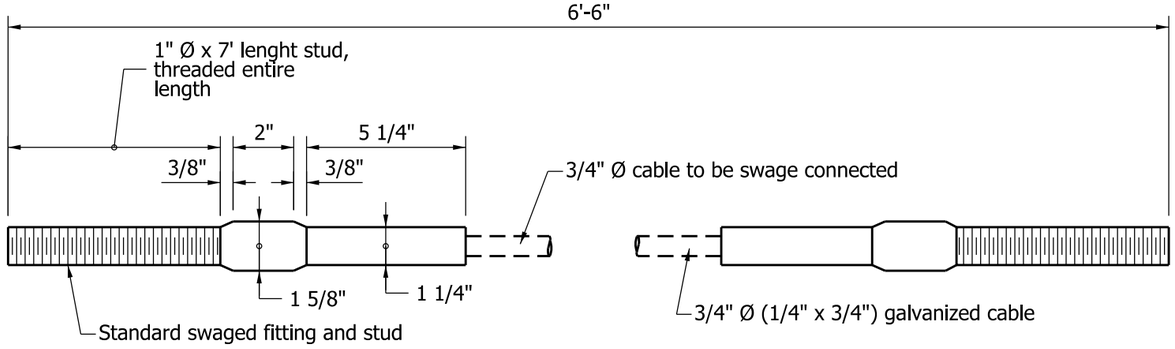

ANCHOR CABLE ASSEMBLY

INDIANA DEPARTMENT OF TRANSPORTATION

CURVED W-BEAM GUARDRAIL SYSTEM

SETEMBER 2011

STANDARD DRAWING NO. E 601-CWGS-04

RICHARD L. VanCLEAVE REGISTERED No. 9750 STATE OF INDIANA PROFESSIONAL ENGINEER

DESIGN STANDARDS ENGINEER

/s/ Richard L. VanCleave 09/01/11
DESIGN STANDARDS ENGINEER DATE

/s/ Mark A. Miller 09/01/11
CHIEF HIGHWAY ENGINEER DATE

GENERAL NOTES

1. This sheet shall be used in conjuction with Standard Drawings E 601-CWGS-01, 02, 03, and 06.
2. An alternate single piece having a similar dimensional shape to the terminal end buffer and mating with the W-beam guardrail may be used.
3. The W-beam terminal connector shall be steel of 0.138 inch thickness (10 gauge).
4. If the W-beam terminal connector is lapped on the outside of the guardrail, a galvanized 1" I.D. 2" O.D., 0.134" thick, narrow plain washer shall be placed under the splice bolt heads.
5. Attach the W-beam to the steel pipe with a $\frac{5}{8}$" diameter x $1\frac{1}{4}$" length button head bolt with no washer. No connection to the post is required.
6. Nuts for the anchor cable assembly shall be hand tightened, plus one complete turn at the anchor plate end. All other nuts shall be torqured to 50 ft.-lbs.

W-BEAM END SECTION (BUFFER)

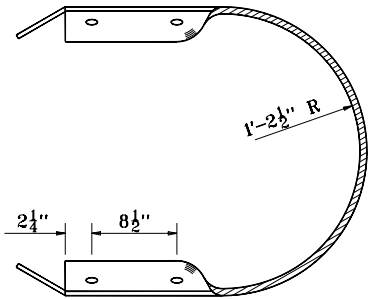

TOP VIEW

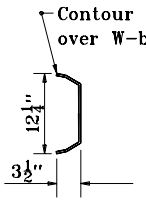

SECTION A-A

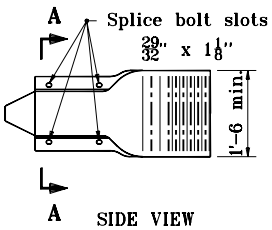

SIDE VIEW

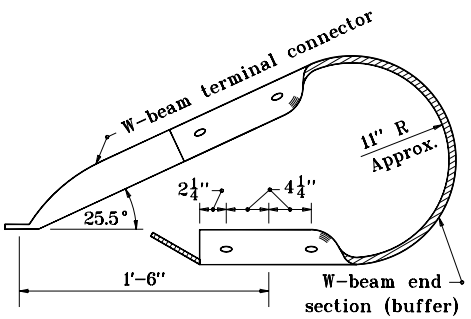

TOP VIEW

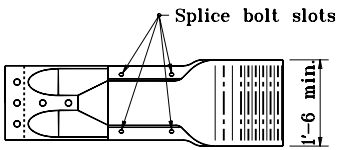

SIDE VIEW

TERMINAL END BUFFER

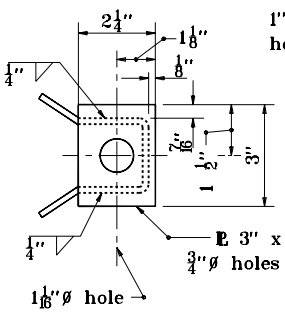

LEFT END VIEW

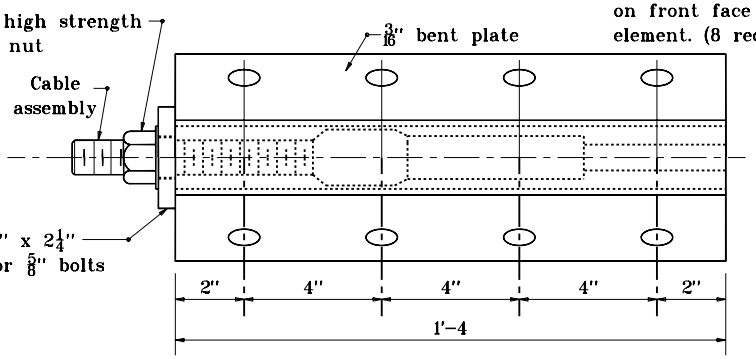

ANCHOR PLATE

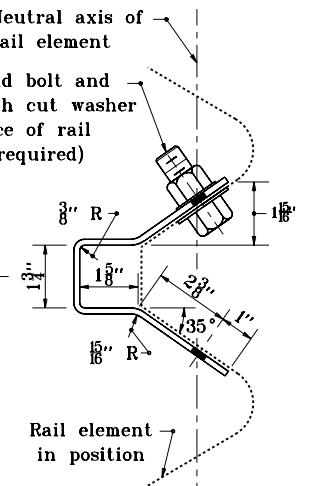

RIGHT END VIEW

INDIANA DEPARTMENT OF TRANSPORTATION

CURVED W-BEAM GUARDRAIL SYSTEM

APRIL 1996

STANDARD DRAWING NO. **E 601-CWGS-05**

ANTHONY L. UREMOVICH REGISTERED No. 18095 STATE OF INDIANA PROFESSIONAL ENGINEER

DESIGN STANDARDS ENGINEER

DETAILS PLACED IN THIS FORMAT	11-15-99
/s/ Anthony L. Uremovich	11-15-99
DESIGN STANDARDS ENGINEER	DATE
/s/ Firooz Zandi	11-15-99
CHIEF HIGHWAY ENGINEER	DATE
ORIGINALLY APPROVED	4-01-96

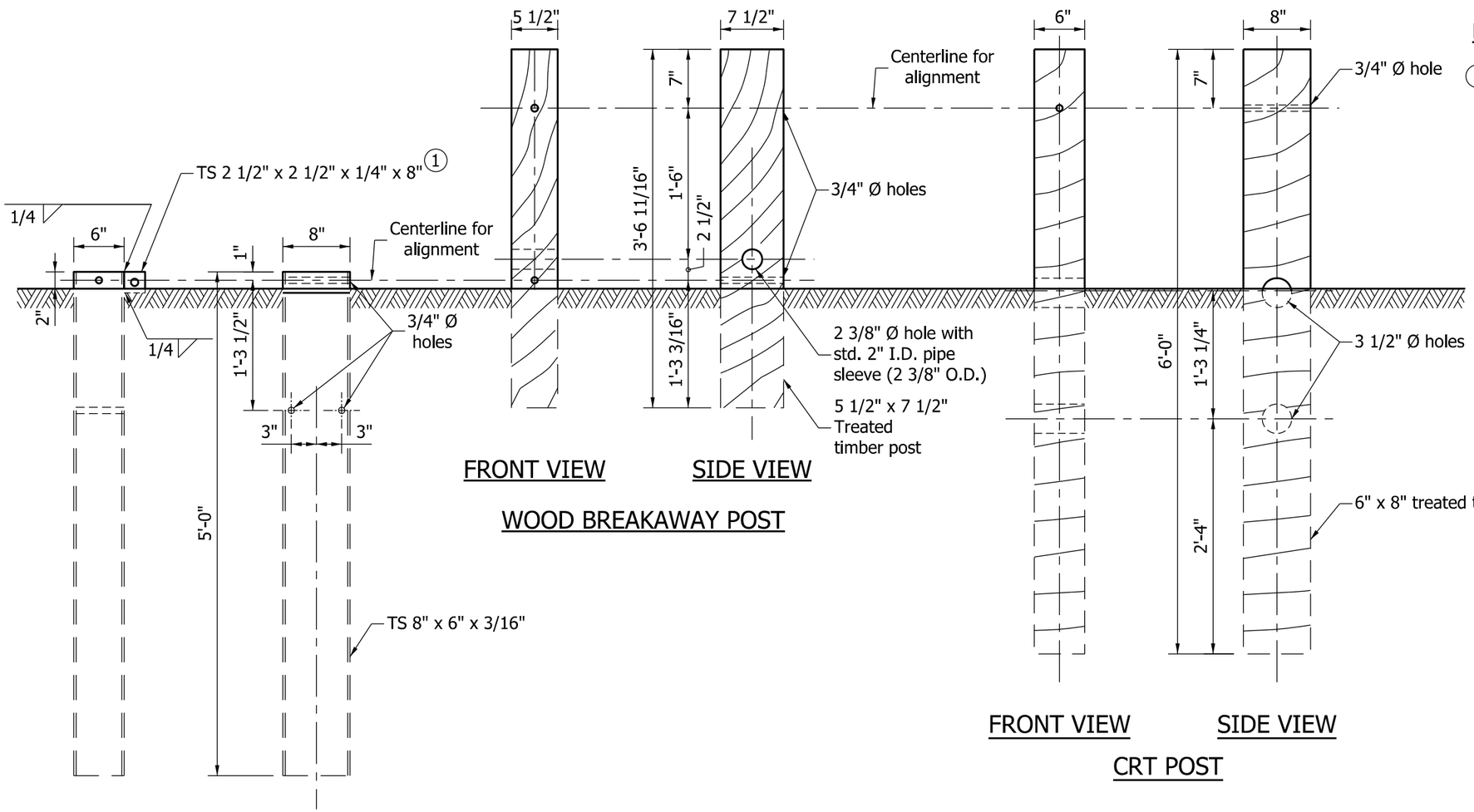

NOTE:

① The TS 2 1/2" x 2 1/2" structural tube shall be welded to Post B only. See Standard Drawing E 601-CWGS-04 for location of Post B.

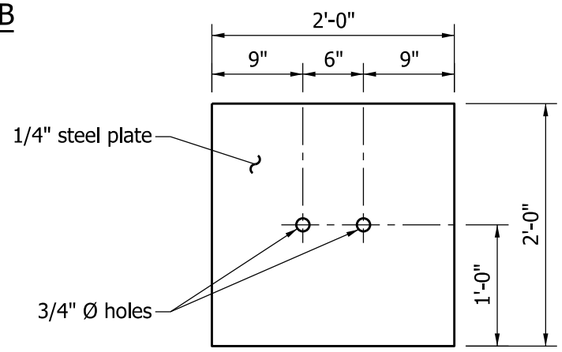

SOIL PLATE

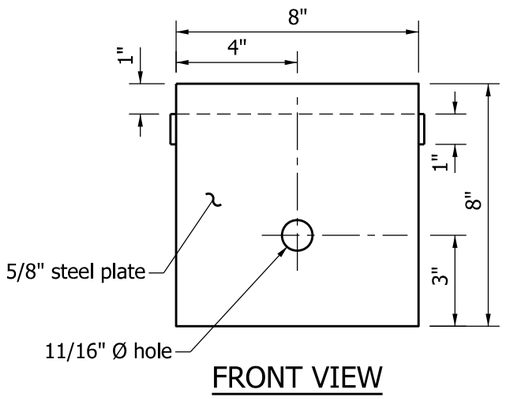

FRONT VIEW

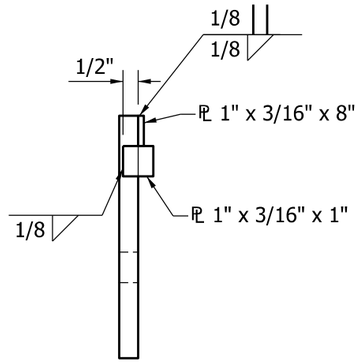

SIDE VIEW

BEARING PLATE

INDIANA DEPARTMENT OF TRANSPORTATION

CURVED W-BEAM GUARDRAIL SYSTEM

SEPTEMBER 2011

STANDARD DRAWING NO. E 601-CWGS-06

RICHARD L. VanCLEAVE REGISTERED No. 9750 STATE OF INDIANA PROFESSIONAL ENGINEER

DETAILS PLACED IN THIS FORMAT 09/04/12

/s/ Richard L. VanCleave 09/04/12

SUPERVISOR, ROADWAY STANDARDS DATE

/s/ Mark A. Miller 09/04/12

CHIEF ENGINEER DATE

NOTES

1. See Standard Drawing E 601-CWGS-03 for other General Notes.
2. See Standard Drawing E 601-CWGS-01 for Table CWGS-1.

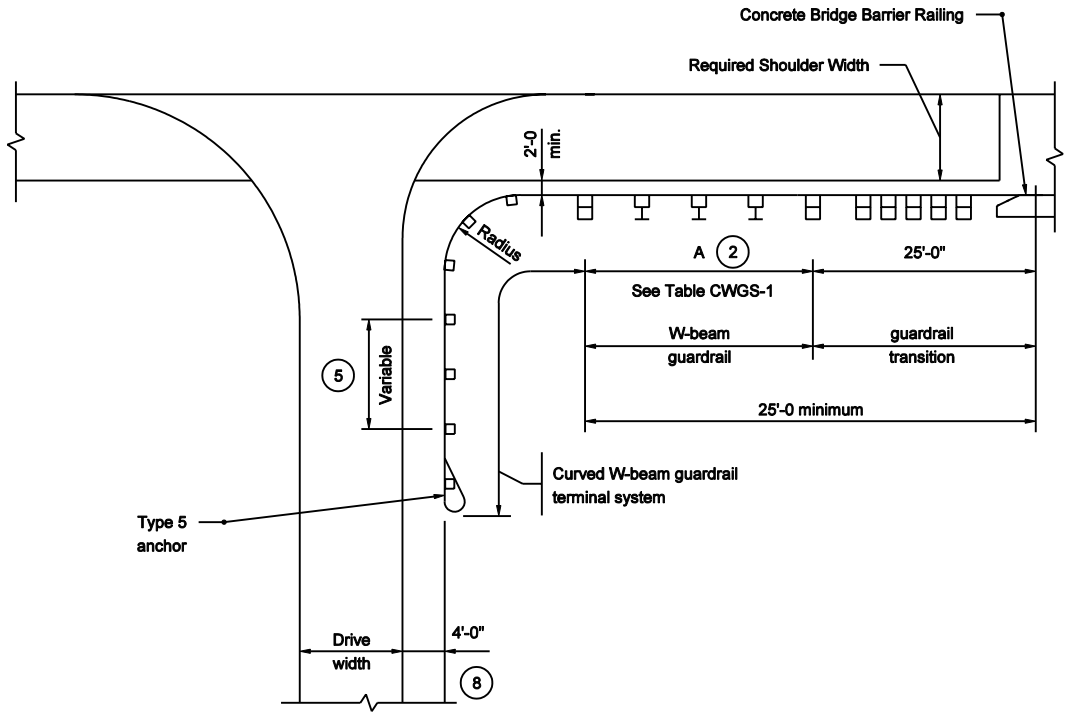

DRIVE INSTALLATION FOR W-BEAM GUARDRAIL AT BRIDGE END

INDIANA DEPARTMENT OF TRANSPORTATION

CURVED W-BEAM GUARDRAIL TERMINAL SYSTEM

SEPTEMBER 2003

STANDARD DRAWING NO. E 601-CWGT-01

RICHARD L. VANCLEAVE REGISTERED No. 9750 STATE OF INDIANA PROFESSIONAL ENGINEER

DESIGN STANDARDS ENGINEER

/s/ Richard L. VanCleave 9-02-03
DESIGN STANDARDS ENGINEER DATE

/s/ Richard K. Smutzer 9-02-03
CHIEF HIGHWAY ENGINEER DATE

NOTES:

1. When the face of the guardrail is offset 0'-0 or 1'-0 from the edge of the paved shoulder, the width of the drive shoulder,S, must be increased to maintain the 4'-0 minimum distance between the face of the guardrail and the edge of the drive.
2. For mainline paved shoulder widths equal to or greater than 8'-0 the drive radii should be referenced from the edge of the mainline paved shoulder rather than as shown
3. See Standard Drawing E 601-CWGS-03 for other General Notes.

TABLE CWGS-1	
DRIVE SHOULDER WIDTH FOR 25' RADIUS	
MAINLINE PAVED SHOULDER WIDTH	DRIVE SHOULDER WIDTH S
10'	5'-0
8'	6'-3
6'	7'-6

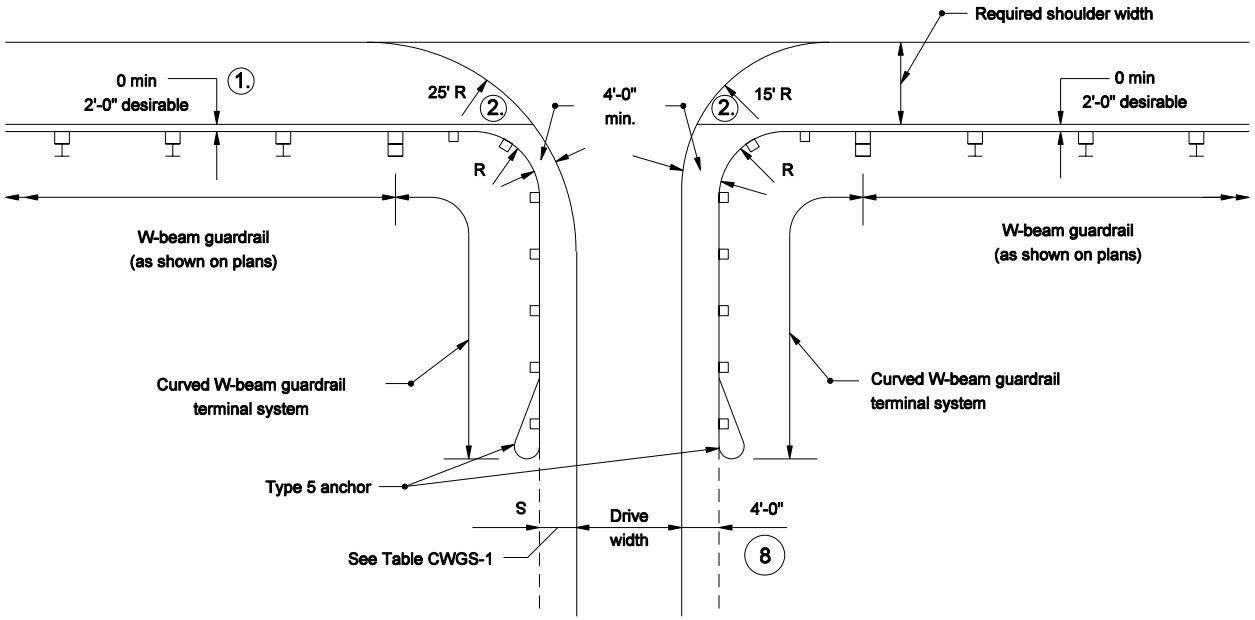

DRIVE INSTALLATION FOR
W-BEAM GUARDRAIL RUN

INDIANA DEPARTMENT OF TRANSPORTATION

CURVED W- BEAM GUARDRAIL TERMINAL SYSTEM

MARCH 2004

STANDARD DRAWING NO. E 601-CWGT-02

RICHARD L. VanCLEAVE REGISTERED No. 9750 STATE OF INDIANA PROFESSIONAL ENGINEER

DESIGN STANDARDS ENGINEER

/s/ Richard L. VanCleave 3-01-04
DESIGN STANDARDS ENGINEER DATE

/s/ Richard K. Smutzer 3-01-04
CHIEF HIGHWAY ENGINEER DATE

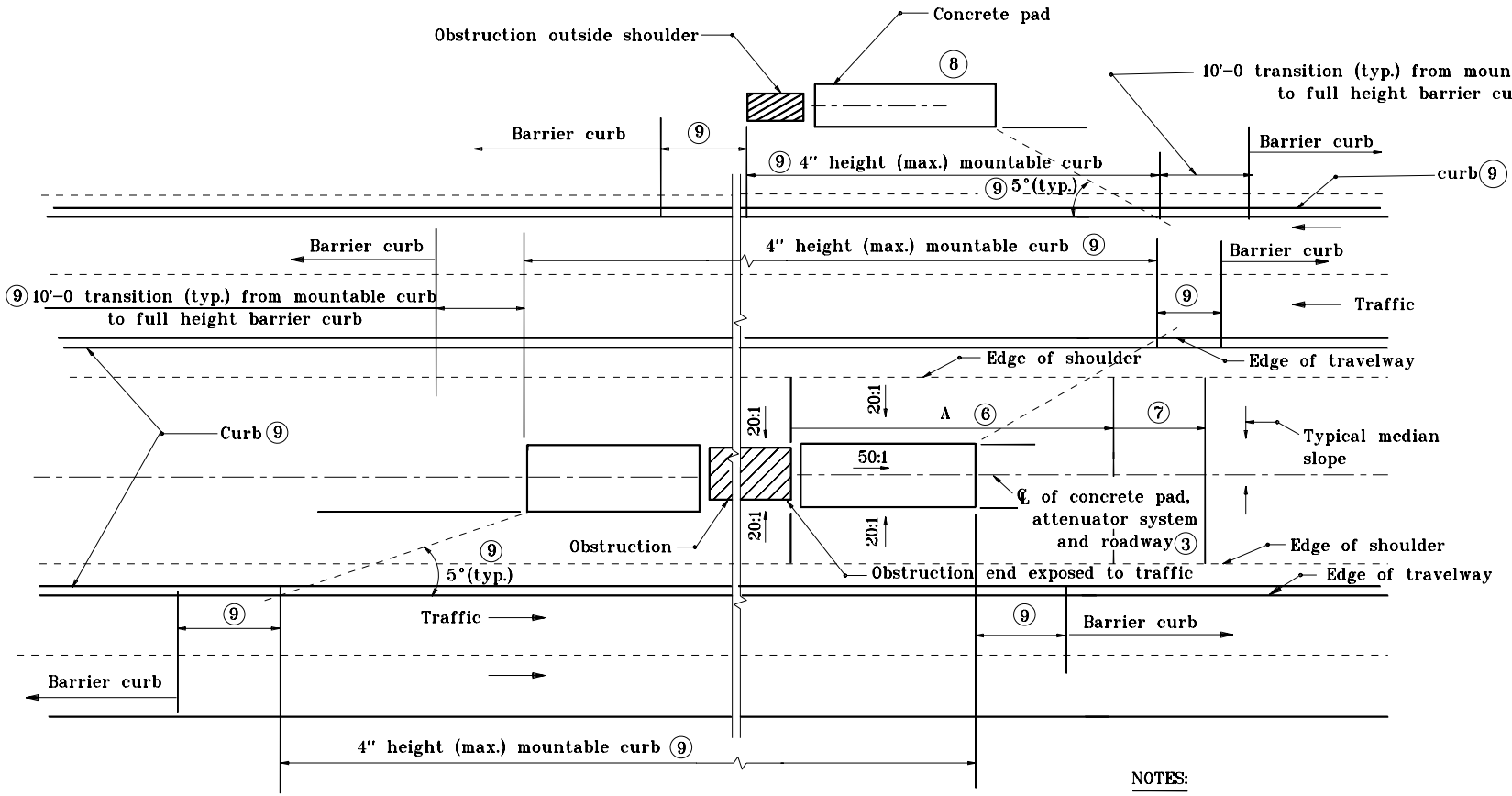

ALIGNMENT OF ATTENUATOR, PAD AND ROADWAY

NOTES:

1. See Standard Drawing E 601–GAIA–01A for notes.

Distance A			Comment
Test Level 3	Test Level 2	Test Level 1	
148'–0	132'–0	100'–0 Desirable	Use appropriate designated impact attenuator test level

INDIANA DEPARTMENT OF TRANSPORTATION

GRADING AT MEDIAN IMPACT ATTENUATOR

MARCH 2002

STANDARD DRAWING NO. **E 601–GAIA–01**

RICHARD L. VanCLEAVE REGISTERED No. 9750 STATE OF INDIANA PROFESSIONAL ENGINEER

DESIGN STANDARDS ENGINEER

/s/ Richard L. VanCleave 3–01–02
DESIGN STANDARDS ENGINEER — DATE

/s/ Richard K. Smutzer 3–01–02
CHIEF HIGHWAY ENGINEER — DATE

NOTES:

1. The pad and grading details shown on these drawings shall be used as applicable to the attenuator system required for either or both ends of the obstruction.

2. Contractor shall follow manufacturer's recommendations for actual pad size for a particular impact attenuator system.

(3) Align the centerline of attenuator system parallel to centerline of the roadway. A maximum angle of 5°, as measured between the longitudinal centerline of the roadway and an impact attenuator system type ED is allowed for the gravel barrel array. See Standard Drawing E 601-IAED-01 for gravel barrel layout and pad size.

4. Variation in transverse slope over the length of the pad shall not exceed 2%.

5. Attenuator system including pad shall not encroach on usable shoulder of the roadway.

(6) Longitudinal downward slope shall be 20:1 maximum.

(7) Longitudinal transition slope shall be a maximum of 10:1 downward.

(8) For a concrete pad adjacent to the outside shoulder area, a distance of 3'-3 beyond the far edge of concrete pad from the travel lane shall be sloped 20:1 before gradual transition to existing slope.

(9) Transition from full height barrier curb to mountable curb shall be provided where barrier curb exists or is planned.

INDIANA DEPARTMENT OF TRANSPORTATION

GRADING AT MEDIAN IMPACT ATTENUATOR

MARCH 2002

STANDARD DRAWING NO. **E 601-GAIA-01A**

RICHARD L. VanCLEAVE REGISTERED No. 9750 STATE OF INDIANA PROFESSIONAL ENGINEER

DESIGN STANDARDS ENGINEER

/s/ Richard L. VanCleave 3-01-02
DESIGN STANDARDS ENGINEER — DATE

/s/ Richard K. Smutzer 3-01-02
CHIEF HIGHWAY ENGINEER — DATE

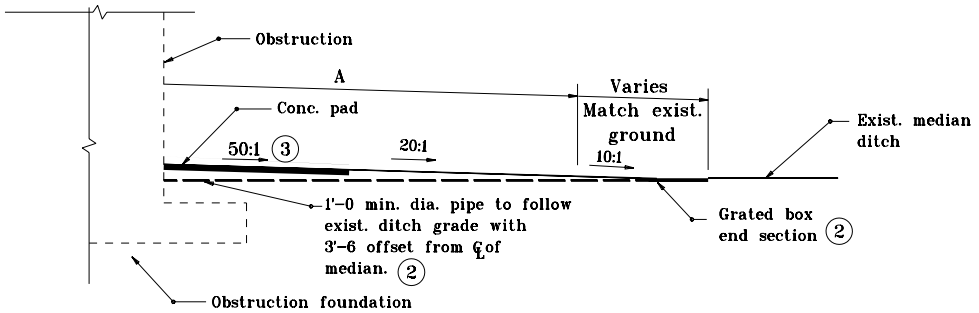

LONGITUDINAL SECTION

Distance A			Comment
Test Level 3	Test Level 2	Test Level 1	
148'–0	132'–0	100'–0 Desirable	Use appropriate designated impact attenuator test level

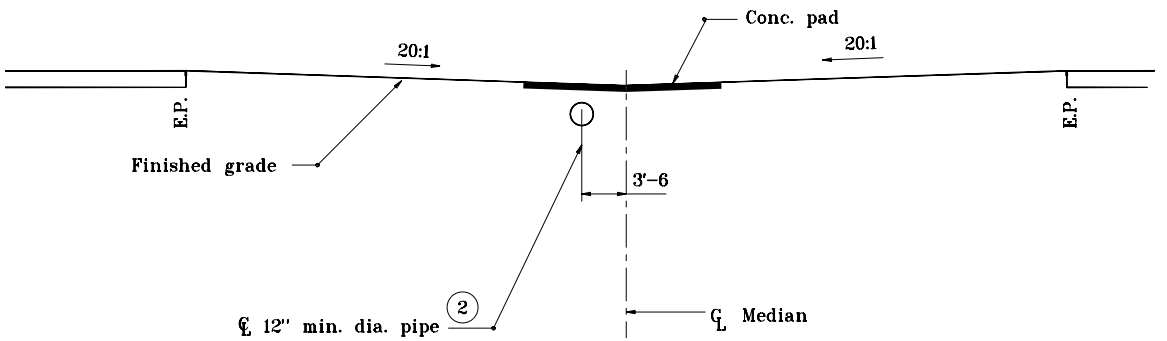

MEDIAN SECTION AT PAD

NOTES:

1. All slopes from the edge of shoulder to the center of the median and distance A upstation and downstation of the obstruction shall be sloped at 20:1 maximum.

(2) Median drainage is to be determined by field inspection. If drainage is required, a 12" min. grated box end section type II, slope 10:1, and a 12" min. type 1 pipe shall be used.

(3) Concrete pad slope

INDIANA DEPARTMENT OF TRANSPORTATION

GRADING AT MEDIAN IMPACT ATTENUATOR

MARCH 2002

STANDARD DRAWING NO. **E 601-GAIA-02**

RICHARD L. VanCLEAVE REGISTERED No. 9750 STATE OF INDIANA PROFESSIONAL ENGINEER

DESIGN STANDARDS ENGINEER

/s/ Richard L. VanCleave 3-01-02
DESIGN STANDARDS ENGINEER — DATE

/s/ Richard K. Smutzer 3-01-02
CHIEF HIGHWAY ENGINEER — DATE

LEGEND

1. Obstruction
2. Impact attenuator pad, transversely as level as conditions permit, maximum slope 20:1. Longitudinally sloping 20:1 maximum, with respect to roadway grade.
3. Shoulder slope 4% toward obstruction/impact attenuator pad/swale.
4. Transition slope 10:1 maximum transversely.
5. Slope as needed, 20:1 desirable, 10:1 maximum.
6. 20:1 desirable, 10:1 maximum.

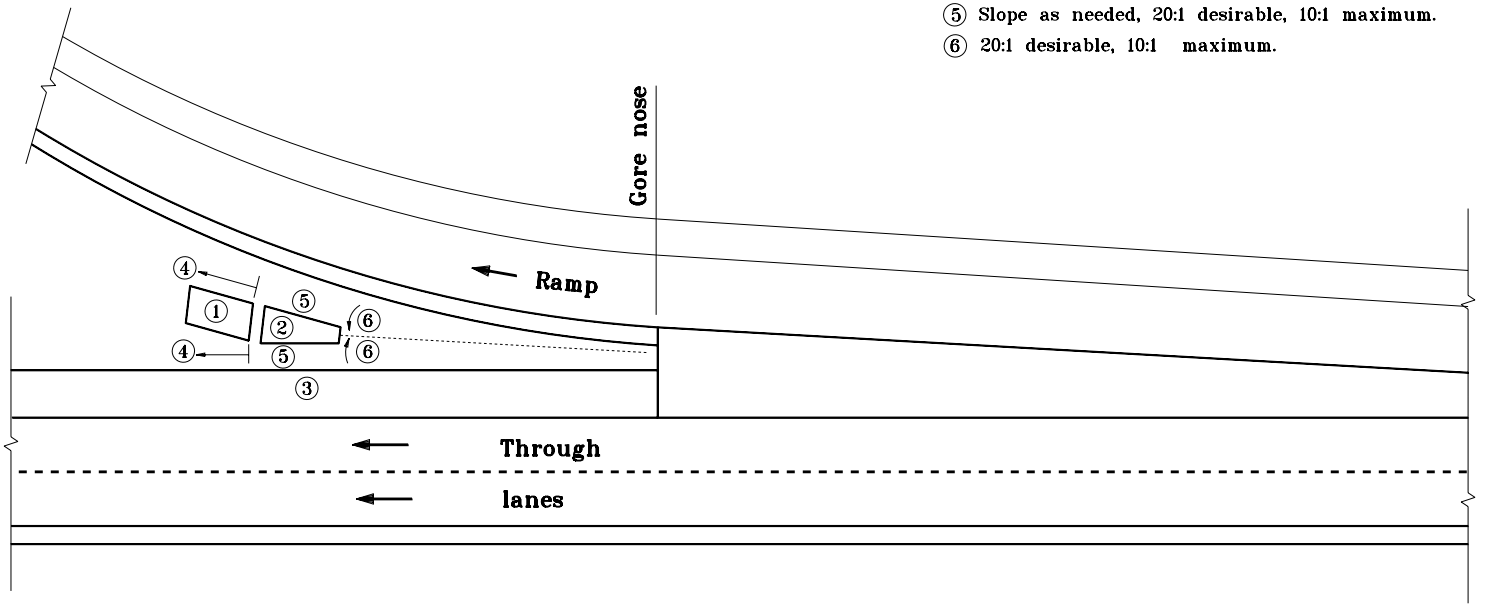

INDIANA DEPARTMENT OF TRANSPORTATION

GRADING AT IMPACT ATTENUATOR IN GORE AREA

MARCH 2002

STANDARD DRAWING NO. **E 601-GAIA-03**

RICHARD L. VanCLEAVE REGISTERED No. 9750 STATE OF INDIANA PROFESSIONAL ENGINEER

DESIGN STANDARDS ENGINEER

/s/ Richard L. VanCleave 3-01-02
DESIGN STANDARDS ENGINEER — DATE

/s/ Richard K. Smutzer 3-01-02
CHIEF HIGHWAY ENGINEER — DATE

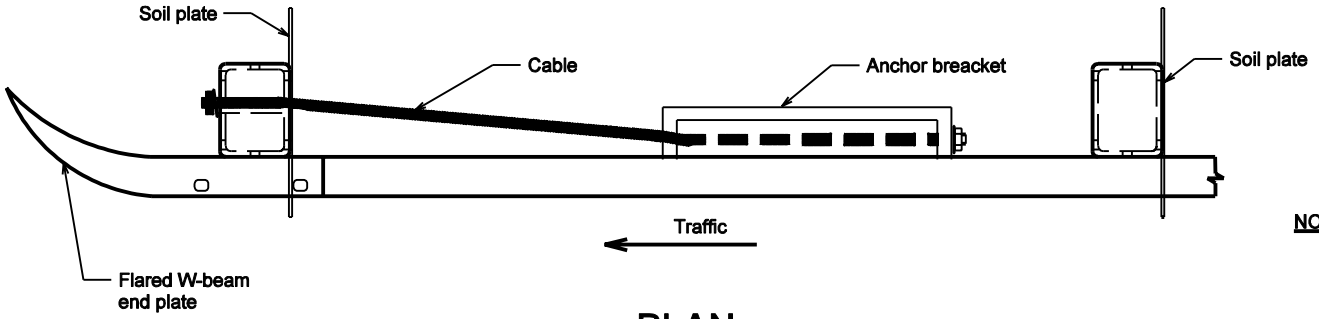

PLAN

NOTES :

1. See Standards Drawing E 601-GCTA-02 for Details A and B.

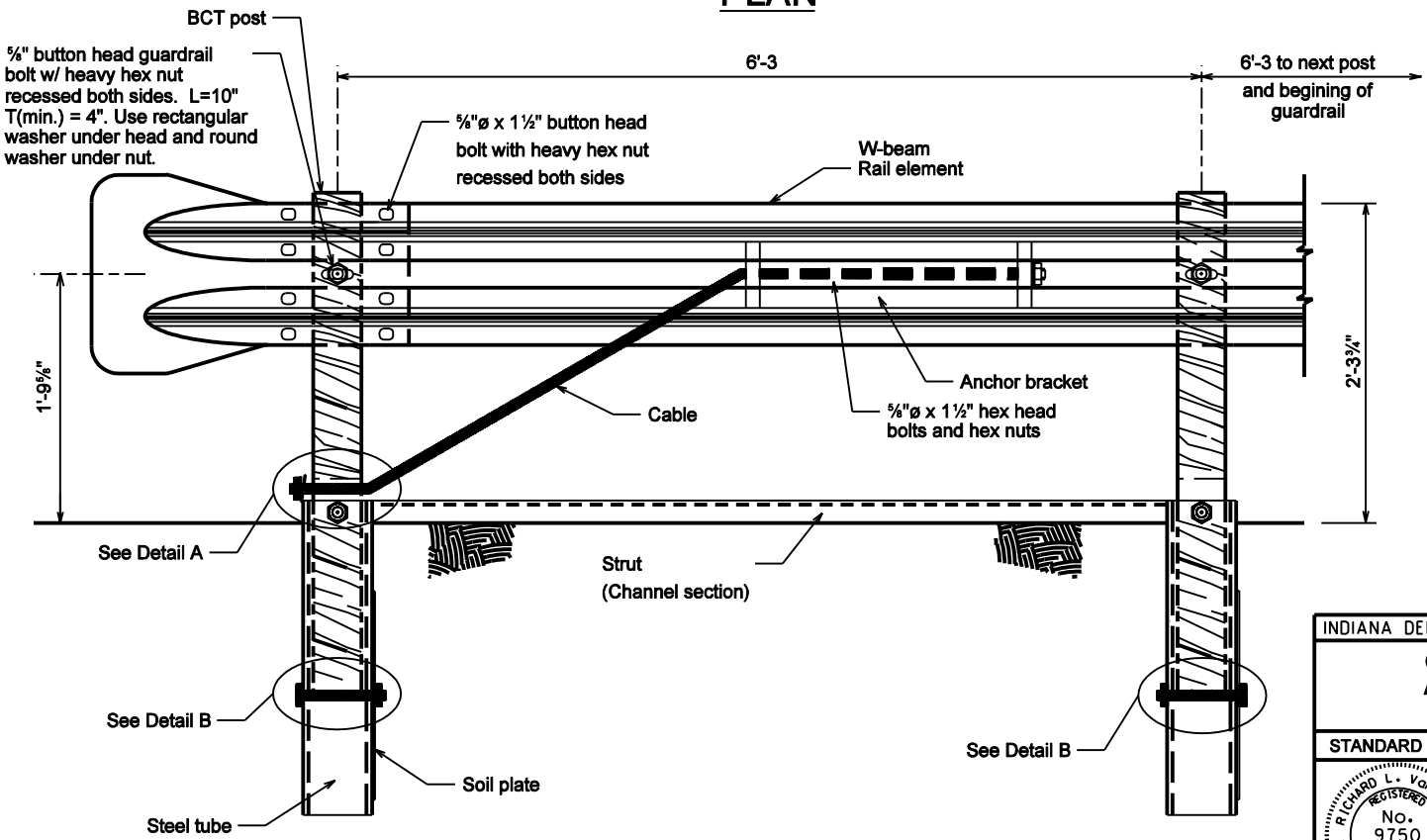

ELEVATION

INDIANA DEPARTMENT OF TRANSPORTATION

CABLE TERMINAL ANCHOR SYSTEM

SEPTEMBER 2001

STANDARD DRAWING NO. E 601-GCTA-01

RICHARD L. VanCLEAVE REGISTERED No. 9750 STATE OF INDIANA PROFESSIONAL ENGINEER

DESIGN STANDARDS ENGINEER

/s/ Richard L. VanCleave 9-04-01
DESIGN STANDARDS ENGINEER DATE

/s/ Firooz Zandi 9-04-01
CHIEF HIGHWAY ENGINEER DATE

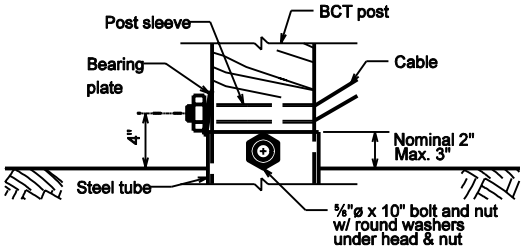

DETAIL A

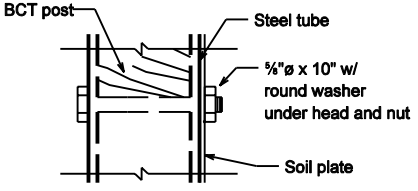

DETAIL B

INDIANA DEPARTMENT OF TRANSPORTATION

CABLE TERMINAL ANCHOR SYSTEM

SEPTEMBER 2001

STANDARD DRAWING NO. E 601-GCTA-02

RICHARD L. VanCLEAVE REGISTERED No. 9750 STATE OF Indiana PROFESSIONAL ENGINEER

DESIGN STANDARDS ENGINEER

/s/ Richard L. VanCleave 9-04-01
DESIGN STANDARDS ENGINEER DATE

/s/ Firooz Zandi 9-04-01
CHIEF HIGHWAY ENGINEER DATE

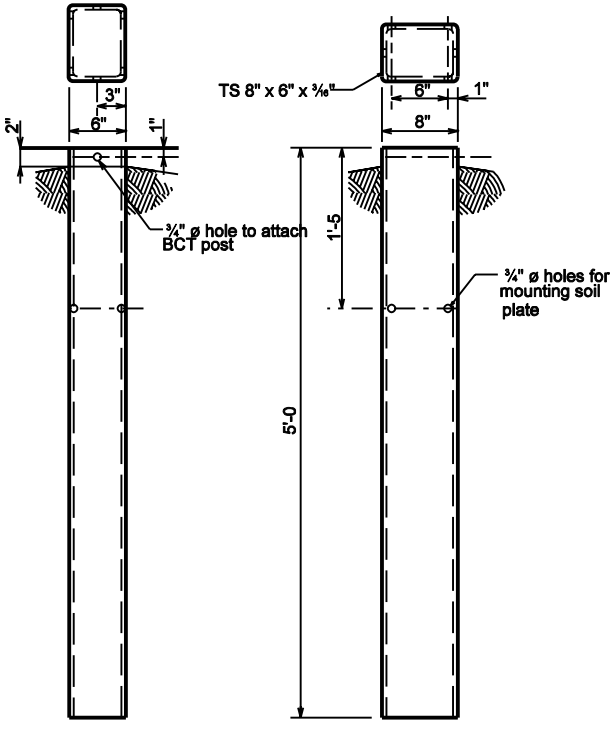

FRONT SIDE

GALVANIZED STEEL FOUNDATION TUBE

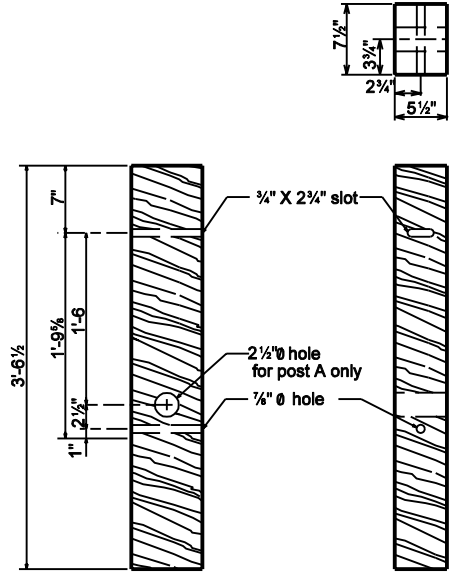

SIDE FRONT

BCT TIMBER POST

INDIANA DEPARTMENT OF TRANSPORTATION

CABLE TERMINAL ANCHOR SYSTEM

SEPTEMBER 2001

STANDARD DRAWING NO. E 601-GCTA-03

RICHARD L. VORCLEAVE REGISTERED No. 9750 STATE OF INDIANA PROFESSIONAL ENGINEER

DESIGN STANDARDS ENGINEER

/s/ Richard L. VorCleave 9-04-01
DESIGN STANDARDS ENGINEER DATE

/s/ Firooz Zandi 9-04-01
CHIEF HIGHWAY ENGINEER DATE

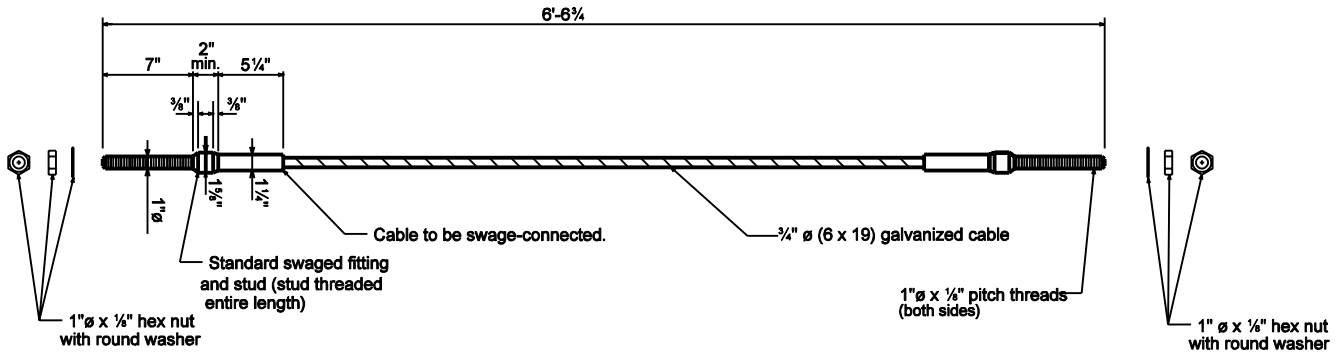

BCT CABLE ANCHOR ASSEMBLY

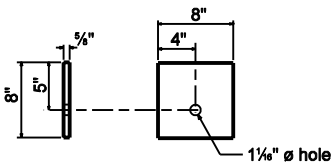

BCT BEARING PLATE

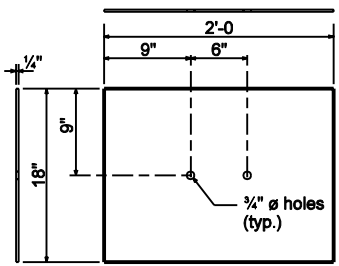

FOUNDATION TUBE SOIL PLATE

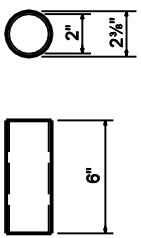

BCT POST SLEEVE

INDIANA DEPARTMENT OF TRANSPORTATION

CABLE TERMINAL ANCHOR SYSTEM

SEPTEMBER 2001

STANDARD DRAWING NO. E 601-GCTA-04

ANTHONY L. UREMOVICH REGISTERED No. 18095 STATE OF INDIANA PROFESSIONAL ENGINEER

DESIGN STANDARDS ENGINEER

/s/ Anthony L Uremovich 9-04-01
DESIGN STANDARDS ENGINEER DATE

/s/ Firooz Zandi 9-04-01
CHIEF HIGHWAY ENGINEER DATE

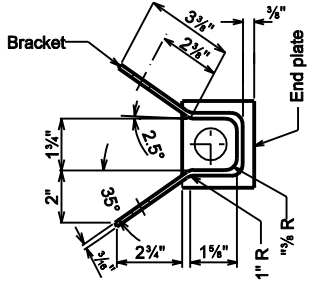

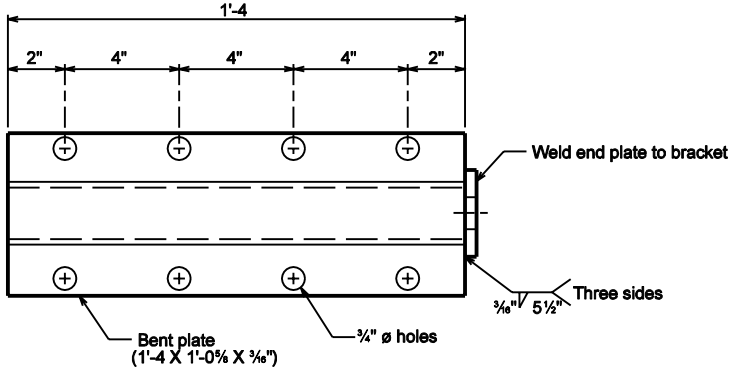

BRACKET

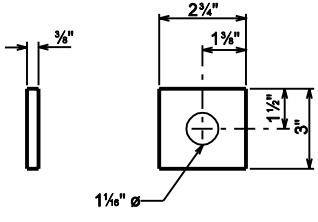

END PLATE

GUARDRAIL ANCHOR BRACKET

INDIANA DEPARTMENT OF TRANSPORTATION

CABLE TERMINAL ANCHOR SYSTEM

SEPTEMBER 2001

STANDARD DRAWING NO. E 601-GCTA-05

RICHARD L. VANCLEAVE REGISTERED No. 9750 STATE OF INDIANA PROFESSIONAL ENGINEER

DESIGN STANDARDS ENGINEER

/s/ Richard L.VanCleave 9-04-01
DESIGN STANDARDS ENGINEER DATE

/s/ Firooz Zondi 9-04-01
CHIEF HIGHWAY ENGINEER DATE

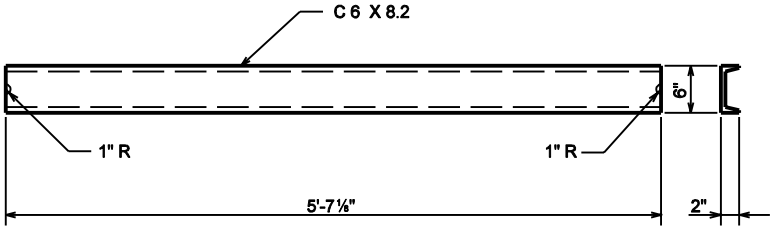

STRUT DETAILS

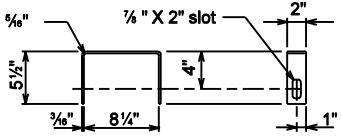

YOKE DETAILS
(2 required)

STRUT AND YOKE ASSEMBLY

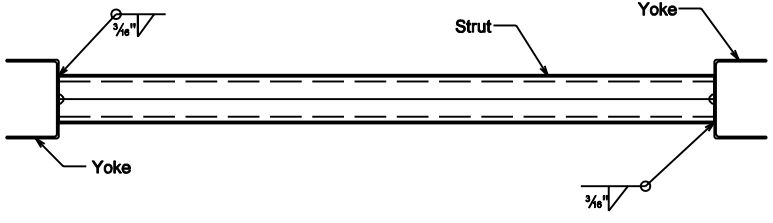

ASSEMBLY DETAILS

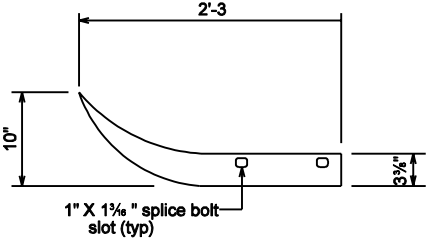

PLAN

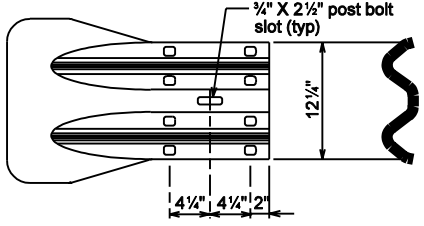

ELEVATION

FLARED W-BEAM END SECTION

INDIANA DEPARTMENT OF TRANSPORTATION

CABLE TERMINAL ANCHOR SYSTEM

SEPTEMBER 2001

STANDARD DRAWING NO. E 601-GCTA-06

RICHARD L. VONCLEAVE REGISTERED No. 9750 STATE OF INDIANA PROFESSIONAL ENGINEER
DESIGN STANDARDS ENGINEER

/s/ Richard L.VonCleave 9-04-01
DESIGN STANDARDS ENGINEER DATE

/s/ Firooz Zandi 9-04-01
CHIEF HIGHWAY ENGINEER DATE

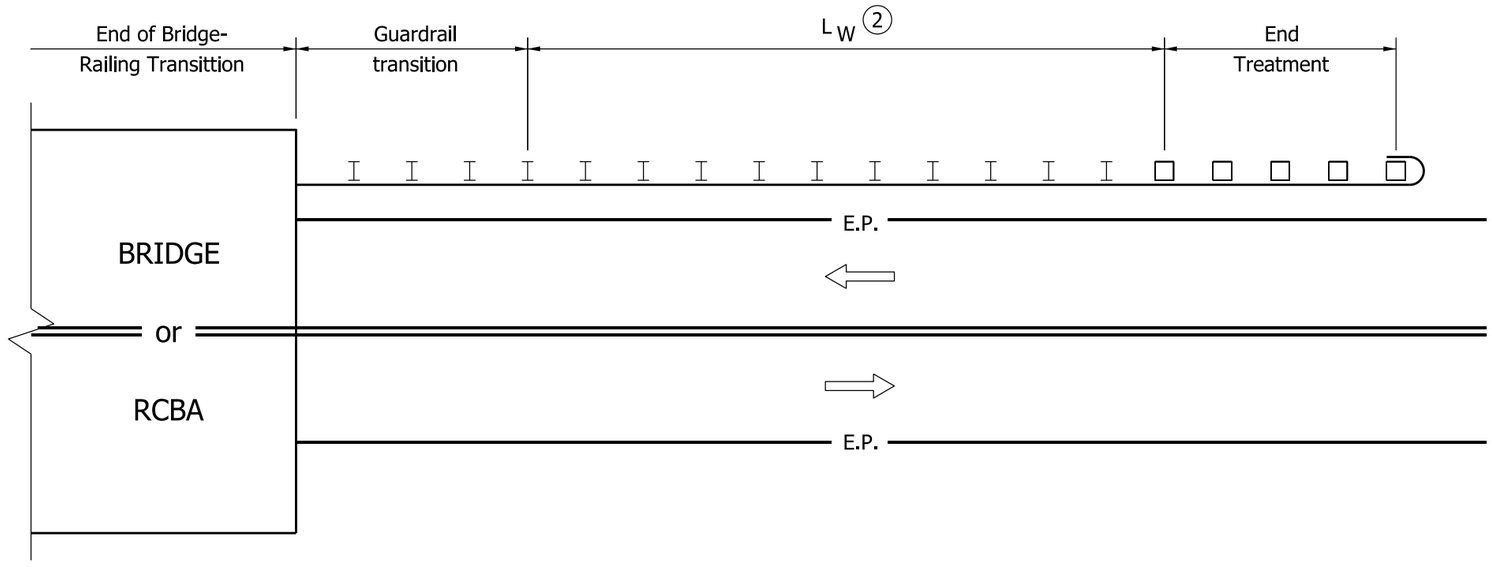

NOTES:

1. This configuration shall be used where W-beam guardrail is specified as the bridge-approach guardrail, and is connected to the bridge railing with guardrail transition type TGB. It shall be typical for all four corners.

(2) L_w = length shown on plans of W-beam guardrail at 6'-3" post spacing. ft.

INDIANA DEPARTMENT OF TRANSPORTATION

BRIDGE-APPROACH
GUARDRAIL
2-LANE 2-WAY ROADWAY
SEPTEMBER 2011

STANDARD DRAWING NO. E 601-GRBA-01

RICHARD L. VanCLEAVE REGISTERED No. 9750 STATE OF INDIANA PROFESSIONAL ENGINEER

DESIGN STANDARDS ENGINEER

/s/ Richard L. VanCleave 09/01/11
DESIGN STANDARDS ENGINEER DATE

/s/ Mark A. Miller 09/01/11
CHIEF HIGHWAY ENGINEER DATE

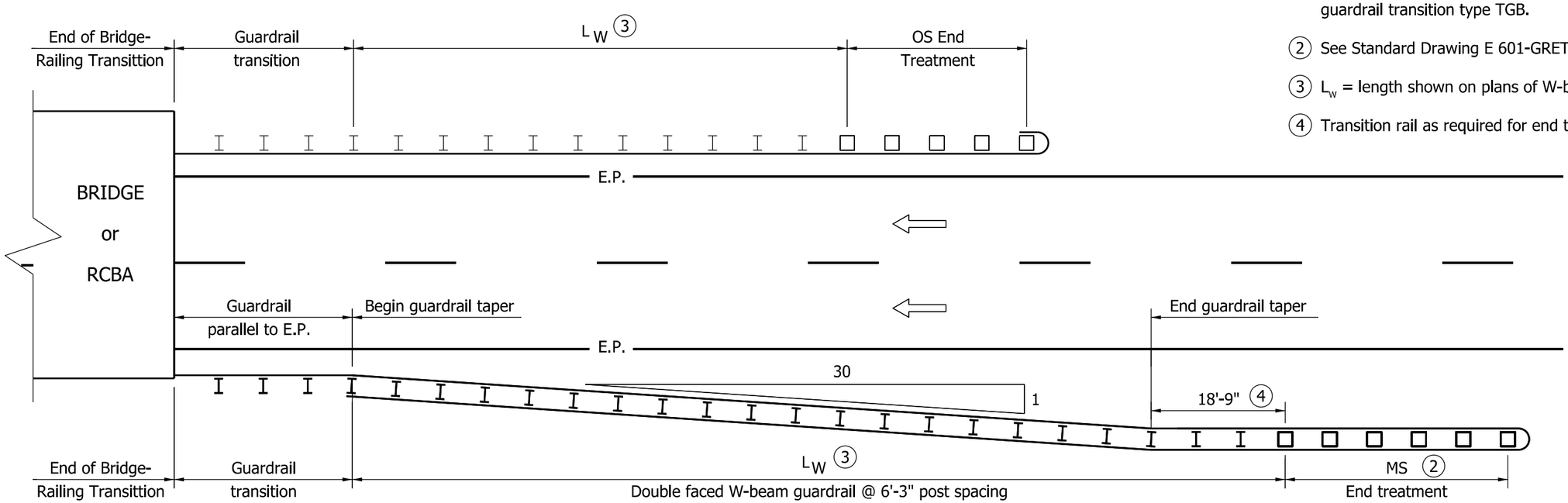

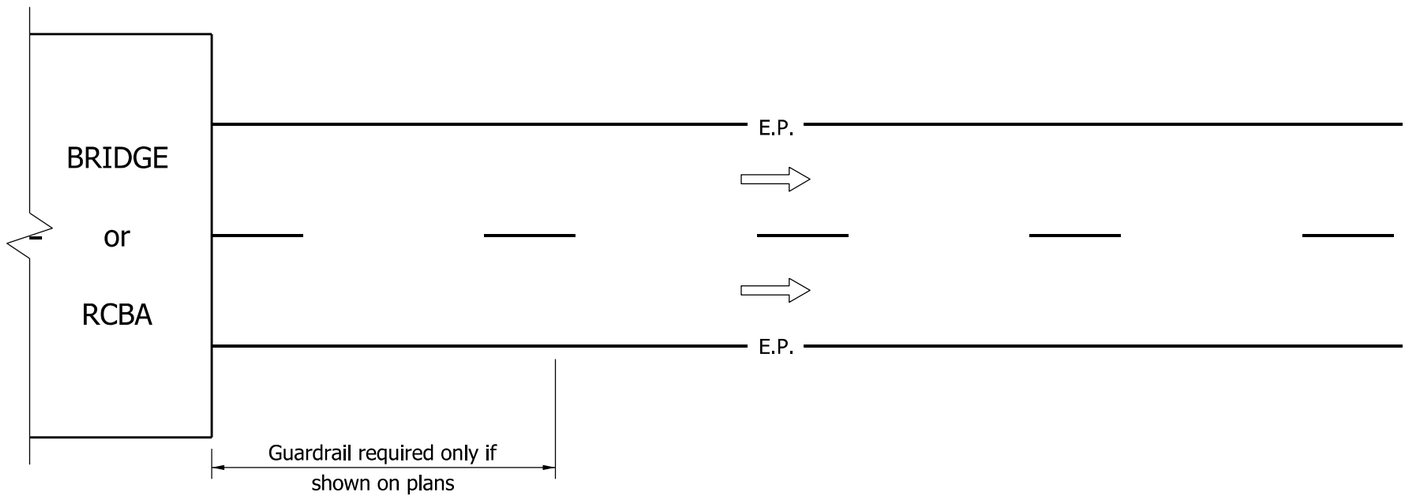

NOTES:

1. This configuration shall be used where W-beam guardrail is specified as the bridge-approach guardrail, and is connected to the bridge railing with guardrail transition type TGB.

(2) See Standard Drawing E 601-GRET-07 for alternate placement detail.

(3) L_w = length shown on plans of W-beam guardrail at 6'-3" post spacing, ft.

(4) Transition rail as required for end treatment type MS.

INDIANA DEPARTMENT OF TRANSPORTATION

BRIDGE-APPROACH
GUARDRAIL
DIVIDED ROADWAY
SEPTEMBER 2011

STANDARD DRAWING NO. E 601-GRBA-02

RICHARD L. VanCLEAVE
REGISTERED
No. 9750
STATE OF INDIANA
PROFESSIONAL ENGINEER

DESIGN STANDARDS ENGINEER

/s/ Richard L. VanCleave 09/01/11
DESIGN STANDARDS ENGINEER DATE

/s/ Mark A. Miller 09/01/11
CHIEF HIGHWAY ENGINEER DATE

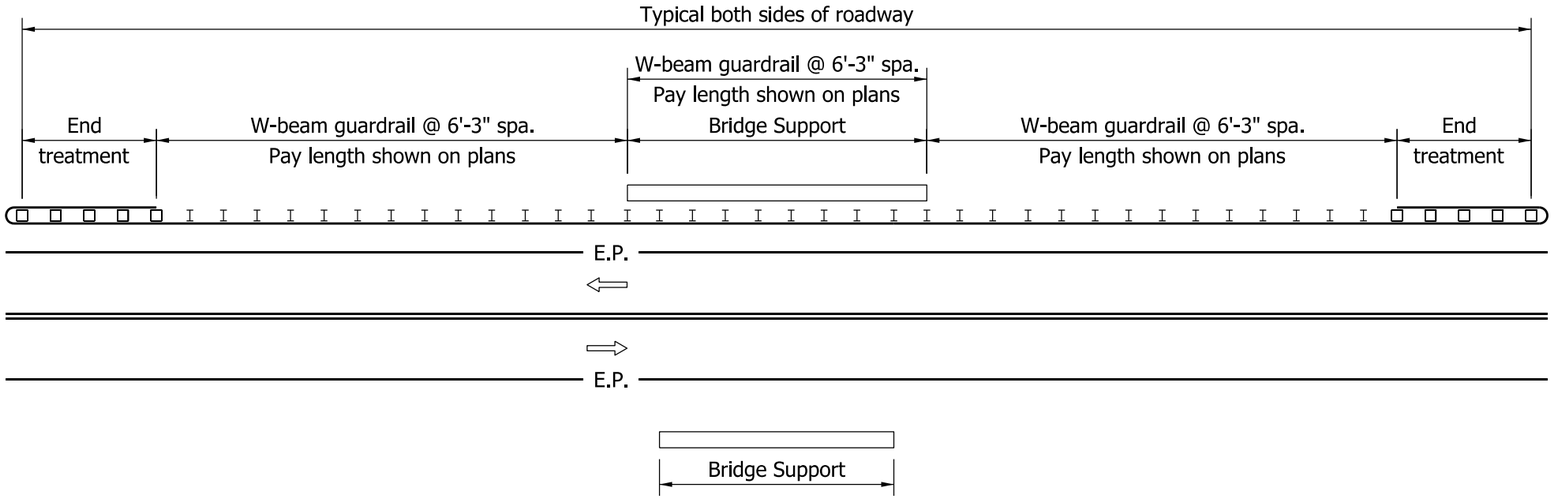

TWO-LANE TWO-WAY ROADWAY WITH SINGLE OVERHEAD STRUCTURE AND BRIDGE-SUPPORT DISTANCE TO E.P.> 16'

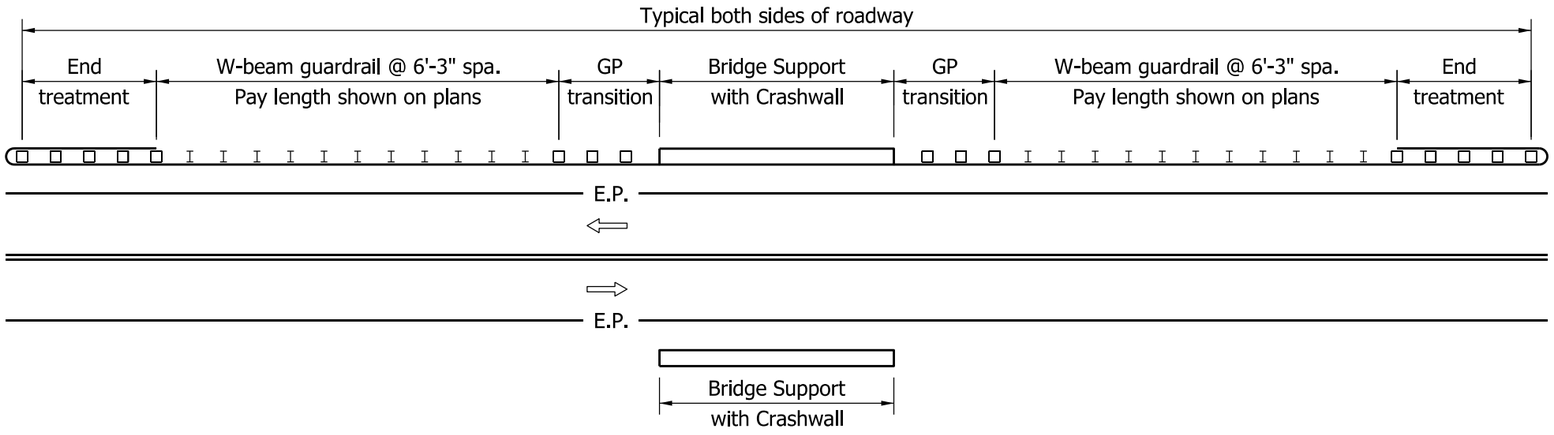

TWO-LANE TWO-WAY ROADWAY WITH SINGLE OVERHEAD STRUCTURE AND BRIDGE-SUPPORT DISTANCE TO E.P. ≤ 16'

NOTES:

1. This configuration shall be used where W-beam guardrail is specified along a two-lane two-way roadway to shield the supports of an overhead structure.
2. Dimensions and details not shown hereon shall be as shown on the plans.

INDIANA DEPARTMENT OF TRANSPORTATION

GUARDRAIL AT ROADSIDE
BRIDGE SUPPORT

SEPTEMBER 2011

STANDARD DRAWING NO. E 601-GRBS-01

RICHARD L. VanCLEAVE
REGISTERED
No. 9750
STATE OF INDIANA
PROFESSIONAL ENGINEER

DESIGN STANDARDS ENGINEER

/s/ Richard L. VanCleave 09/01/11
DESIGN STANDARDS ENGINEER DATE

/s/ Mark A. Miller 09/01/11
CHIEF HIGHWAY ENGINEER DATE

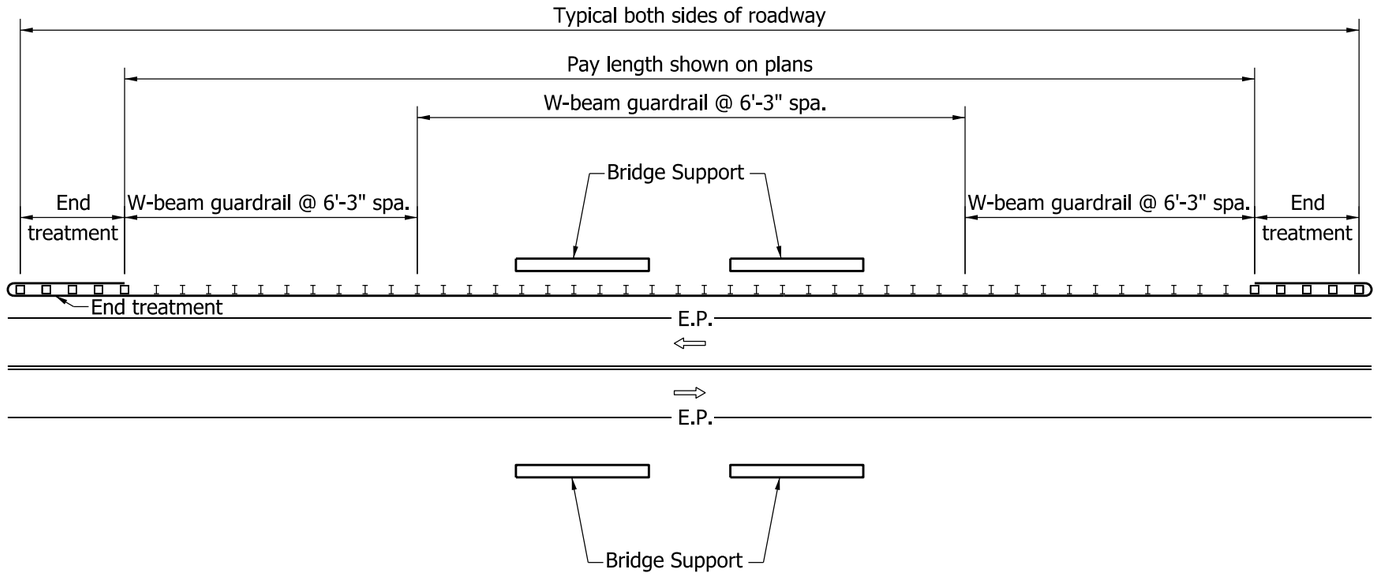

TWO-LANE TWO-WAY ROADWAY WITH TWIN OVERHEAD STRUCTURES AND BRIDGE-SUPPORT DISTANCE TO E.P.> 16'

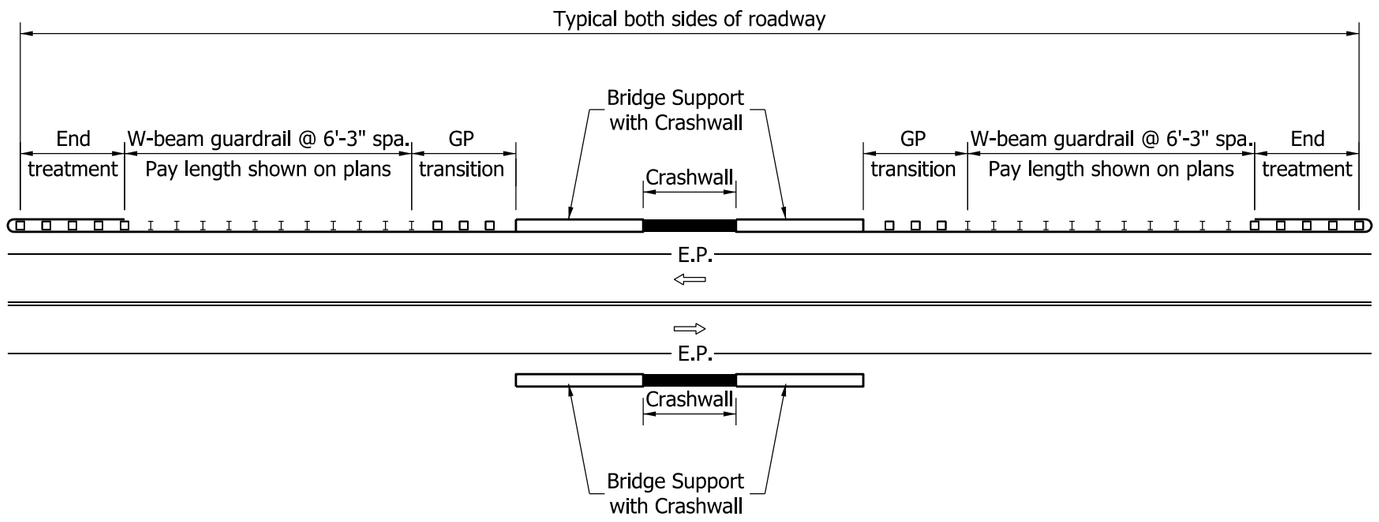

TWO-LANE TWO-WAY ROADWAY WITH TWIN OVERHEAD STRUCTURES AND BRIDGE-SUPPORT DISTANCE TO E.P. ≤ 16'

NOTES:

1. This configuration shall be used where W-beam guardrail is specified along a two-lane two-way roadway to shield the supports of twin overhead structures.

2. Dimensions and details not shown hereon shall be as shown on the plans.

INDIANA DEPARTMENT OF TRANSPORTATION

GUARDRAIL AT ROADSIDE
BRIDGE SUPPORTS

SEPTEMBER 2011

STANDARD DRAWING NO. E 601-GRBS-02

RICHARD L. VanCLEAVE
REGISTERED
No. 9750
STATE OF INDIANA
PROFESSIONAL ENGINEER

DESIGN STANDARDS ENGINEER

/s/ Richard L. VanCleave 09/01/11
DESIGN STANDARDS ENGINEER DATE

/s/ Mark A. Miller 09/01/11
CHIEF HIGHWAY ENGINEER DATE

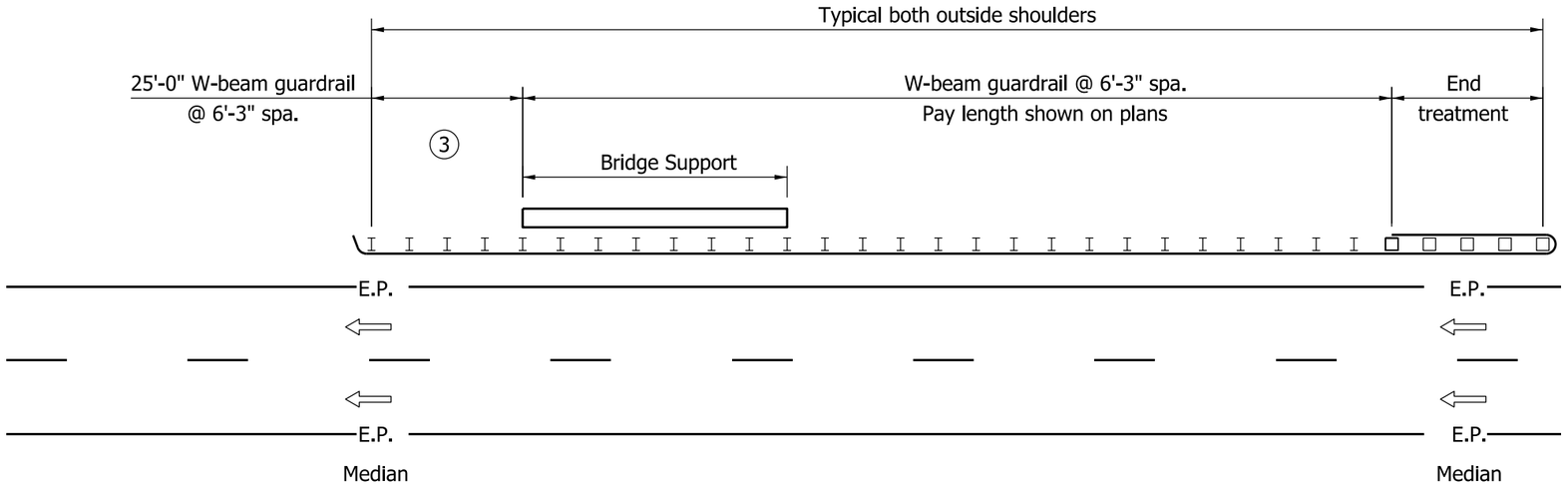

DIVIDED ROADWAY WITH SINGLE OVERHEAD STRUCTURE AND OUTSIDE SHOULDER BRIDGE-SUPPORT DISTANCE TO E.P. > 16'

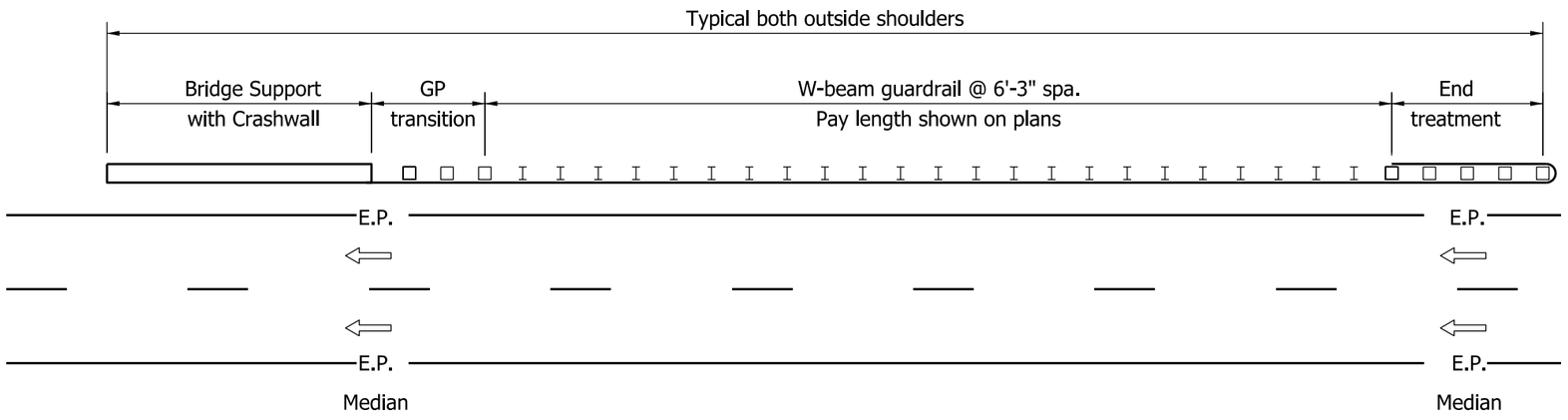

DIVIDED ROADWAY WITH SINGLE OVERHEAD STRUCTURE AND OUTSIDE SHOULDER BRIDGE-SUPPORT DISTANCE TO E.P. ≤ 16'

NOTES:

1. This configuration shall be used where W-beam guardrail is specified along the outside shoulder of a divided roadway to shield the supports of an overhead structure.
2. Dimensions and details not shown hereon shall be as shown on the plans.

(3) Rectangular plate washers shall be installed at each post along this section. See Standard Drawing E 601-GRBS-08.

INDIANA DEPARTMENT OF TRANSPORTATION

GUARDRAIL AT ROADSIDE
BRIDGE SUPPORT

SEPTEMBER 2011

STANDARD DRAWING NO. E 601-GRBS-03

RICHARD L. VanCLEAVE REGISTERED No. 9750 STATE OF INDIANA PROFESSIONAL ENGINEER

DESIGN STANDARDS ENGINEER

/s/ Richard L. VanCleave 09/01/11
DESIGN STANDARDS ENGINEER DATE

/s/ Mark A. Miller 09/01/11
CHIEF HIGHWAY ENGINEER DATE

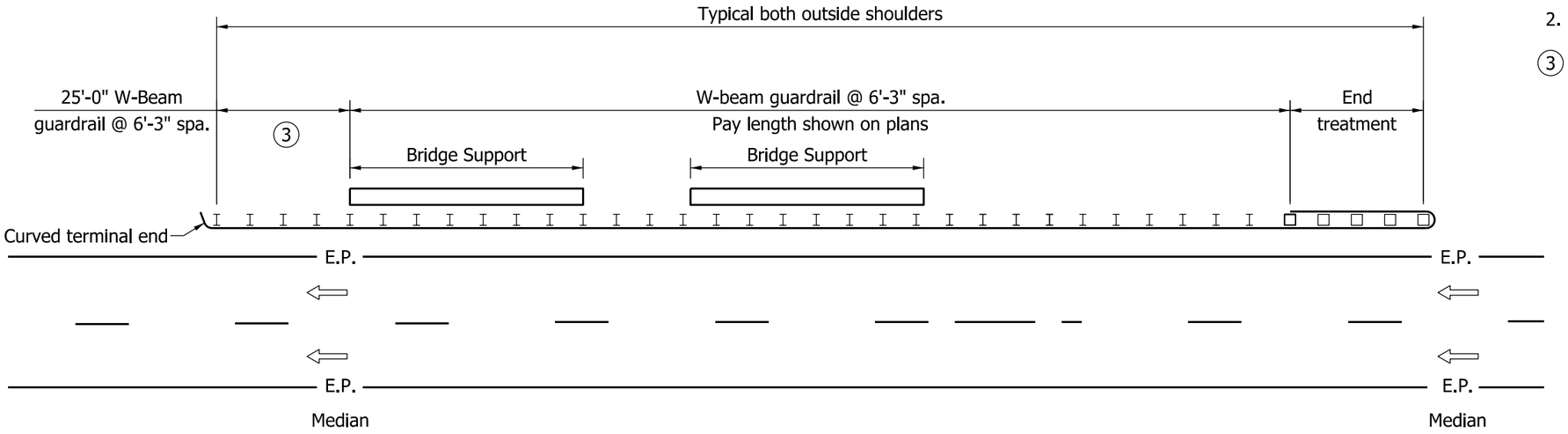

DIVIDED ROADWAY WITH TWIN OVERHEAD STRUCTURES AND OUTSIDE-SHOULDER BRIDGE-SUPPORT DISTANCE TO E.P. > 16'

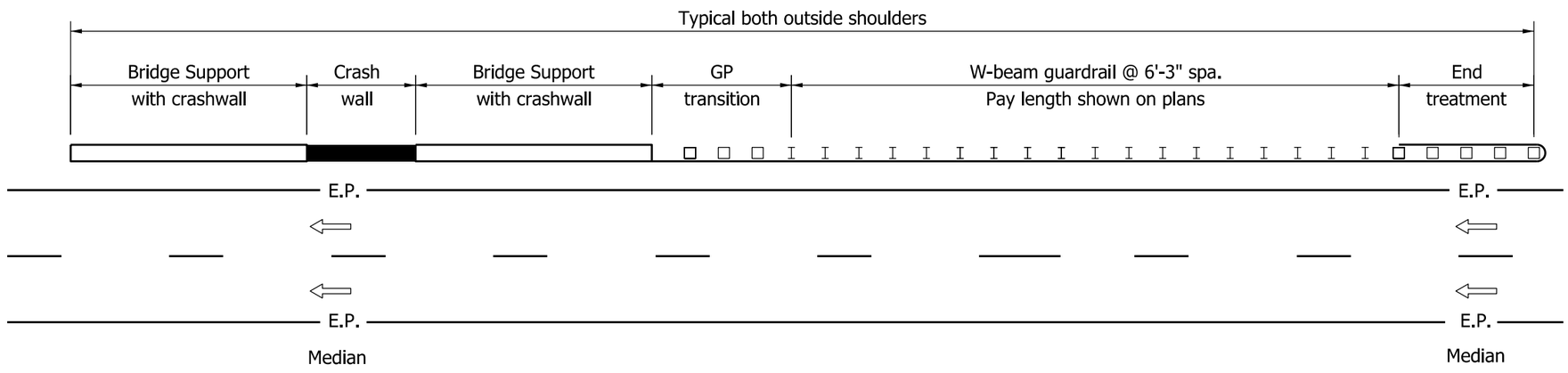

DIVIDED ROADWAY WITH TWIN OVERHEAD STRUCTURES AND OUTSIDE-SHOULDER BRIDGE-SUPPORT DISTANCE TO E.P. ≤ 16'

NOTES:

1. This configuration shall be used where W-beam guardrail is specified along the outside shoulder of a divided roadway to shield the supports of twin overhead structures.
2. Dimensions and details not shown hereon shall be as shown on the plans.

(3) Rectangular plate washers shall be installed at each post along this section. See Standard Drawing E 601-GRBS-08.

INDIANA DEPARTMENT OF TRANSPORTATION

GUARDRAIL AT ROADSIDE
BRIDGE SUPPORTS

SEPTEMBER 2011

STANDARD DRAWING NO. E 601-GRBS-04

RICHARD L. VanCLEAVE REGISTERED No. 9750 STATE OF INDIANA PROFESSIONAL ENGINEER

DESIGN STANDARDS ENGINEER

/s/ Richard L. VanCleave 09/01/11
DESIGN STANDARDS ENGINEER DATE

/s/ Mark A. Miller 09/01/11
CHIEF HIGHWAY ENGINEER DATE

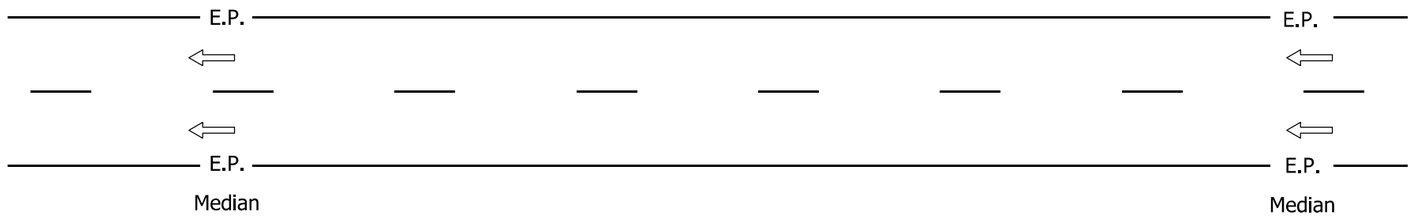

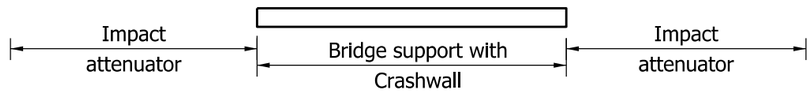

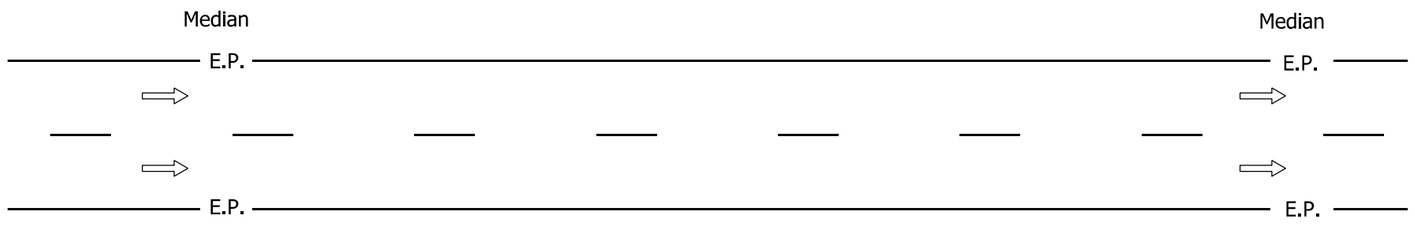

DIVIDED ROADWAY WITH SINGLE OVERHEAD STRUCTURE AND MEDIAN BRIDGE SUPPORT

NOTES:

1. This configuration shall be used where impact-attenuator units are specified in conjunction with a crashwall in the median of a divided roadway to shield the support of an overhead structure.

2. Dimensions and details not shown hereon shall be as shown on the plans.

INDIANA DEPARTMENT OF TRANSPORTATION

GUARDRAIL AT MEDIAN-SIDE
BRIDGE SUPPORT

SEPTEMBER 2011

STANDARD DRAWING NO. E 601-GRBS-05

RICHARD L. VanCLEAVE
REGISTERED
No. 9750
STATE OF INDIANA
PROFESSIONAL ENGINEER

DESIGN STANDARDS ENGINEER

/s/ Richard L. VanCleave 09/01/11
DESIGN STANDARDS ENGINEER DATE

/s/ Mark A. Miller 09/01/11
CHIEF HIGHWAY ENGINEER DATE

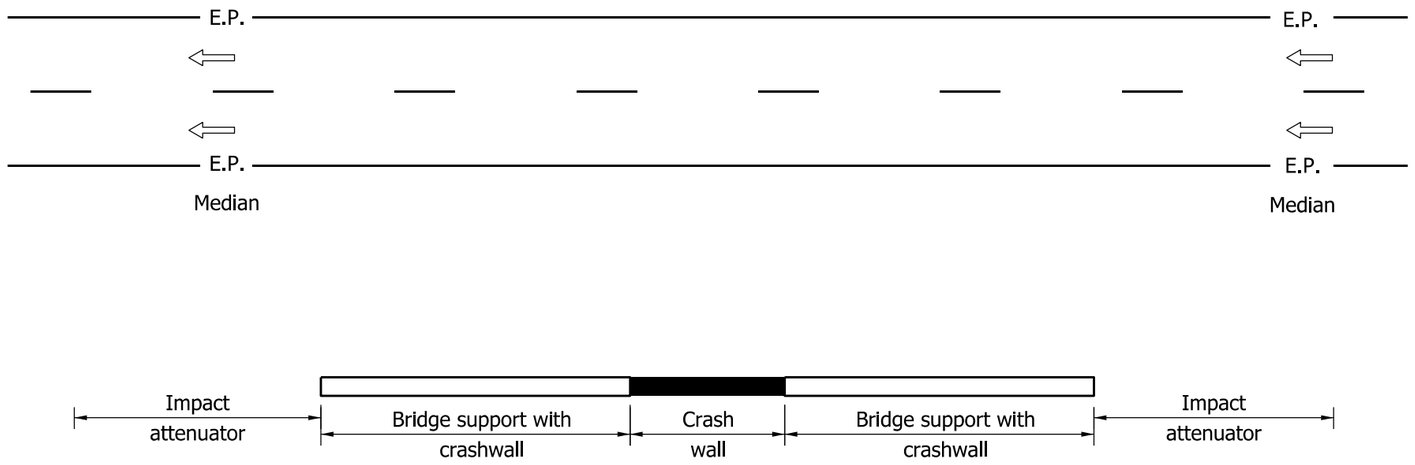

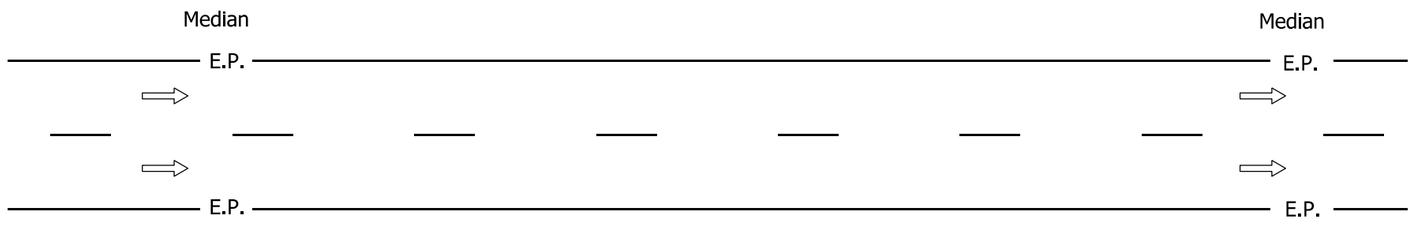

DIVIDED ROADWAY WITH TWIN OVERHEAD STRUCTURES AND MEDIAN BRIDGE SUPPORTS

NOTES:

1. This configuration shall be used where impact-attenuator units are specified in conjunction with a crashwall in the median of a divided roadway to shield the supports of twin overhead structures.

2. Dimensions and details not shown hereon shall be as shown on the plans.

INDIANA DEPARTMENT OF TRANSPORTATION

GUARDRAIL AT MEDIAN-SIDE BRIDGE SUPPORTS

SEPTEMBER 2011

STANDARD DRAWING NO. E 601-GRBS-06

RICHARD L. VanCLEAVE REGISTERED No. 9750 STATE OF INDIANA PROFESSIONAL ENGINEER

DESIGN STANDARDS ENGINEER

/s/ Richard L. VanCleave 09/01/11
DESIGN STANDARDS ENGINEER DATE

/s/ Mark A. Miller 09/01/11
CHIEF HIGHWAY ENGINEER DATE

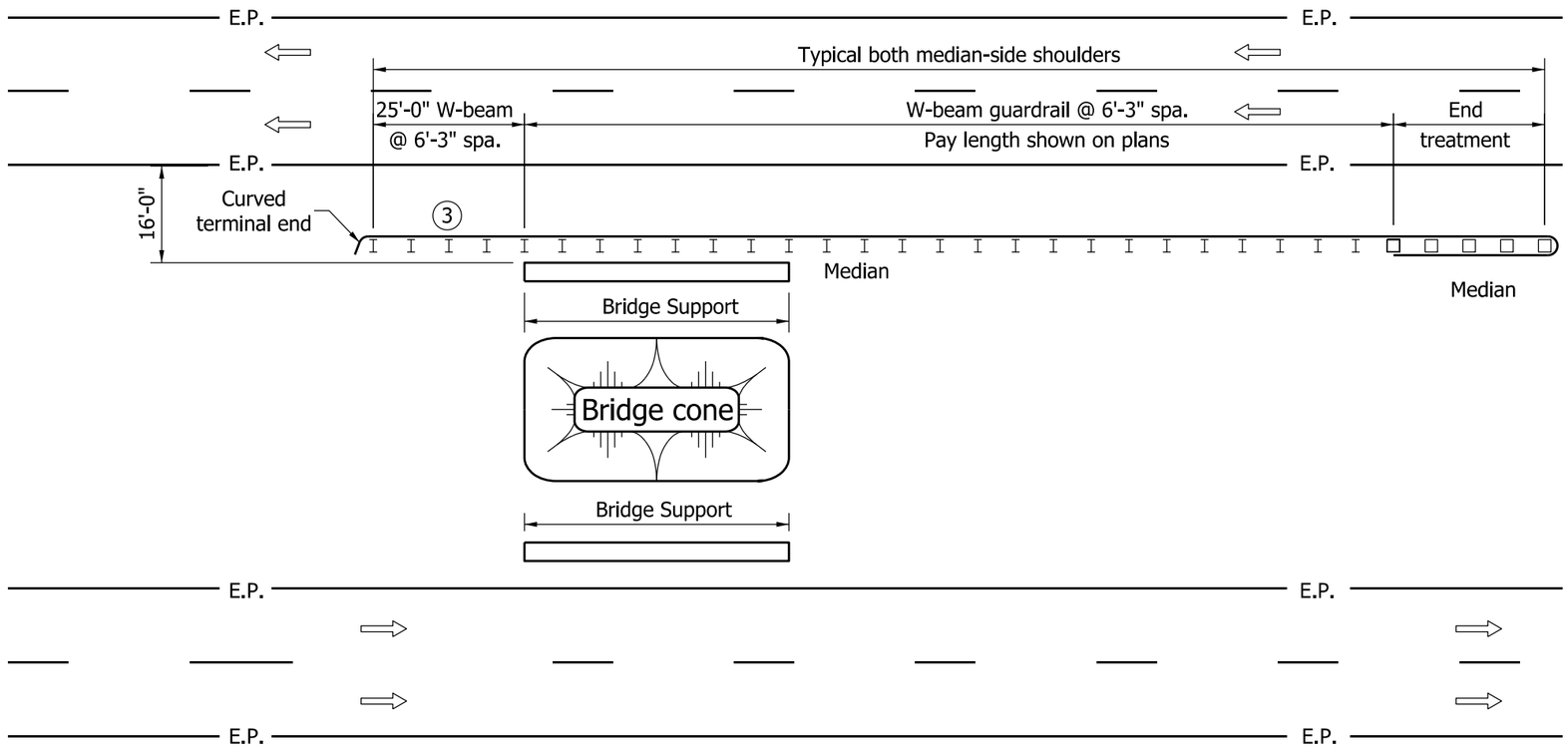

DIVIDED ROADWAY WITH TANDEM OVERHEAD STRUCTURES AND MEDIAN-SIDE BRIDGE-SUPPORT DISTANCE TO E.P. > 16'

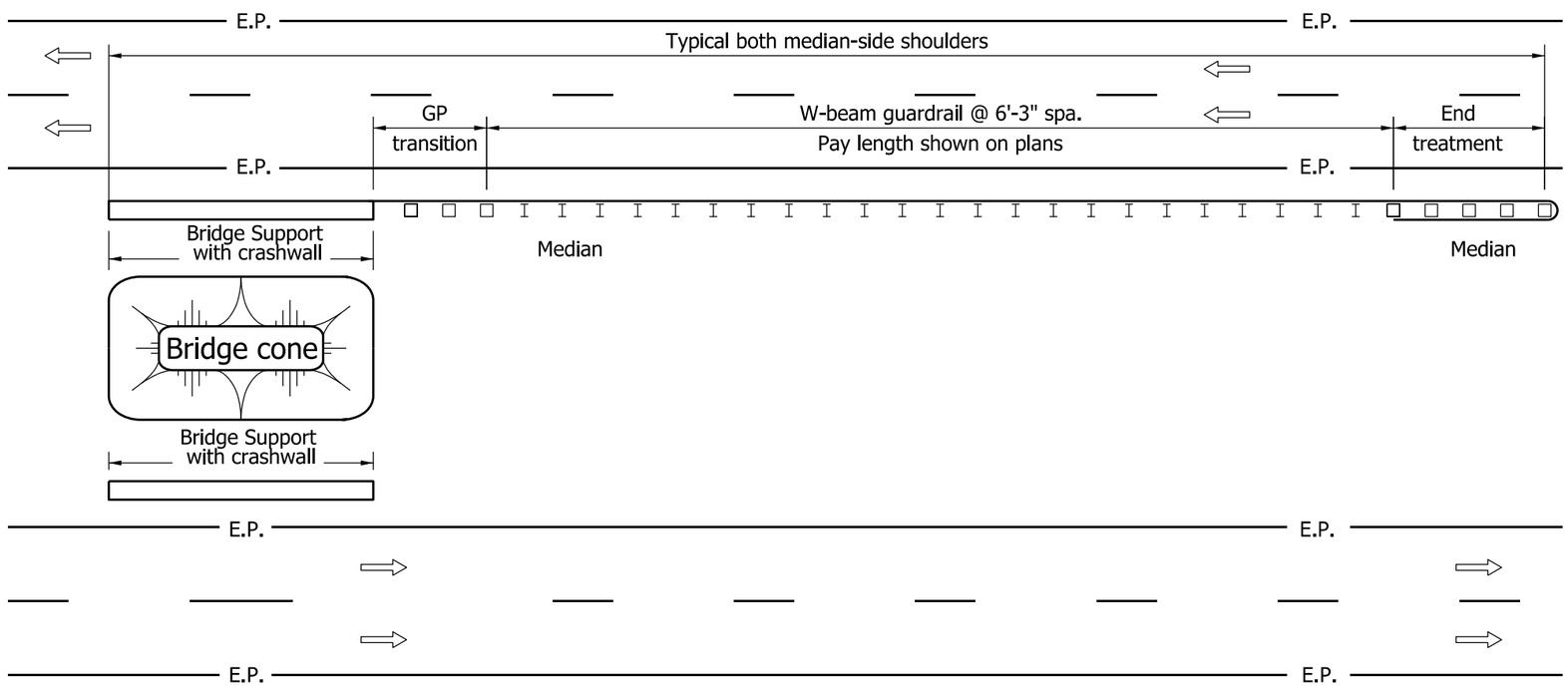

DIVIDED ROADWAY WITH TANDEM OVERHEAD STRUCTURES AND MEDIAN-SIDE BRIDGE-SUPPORT DISTANCE TO E.P. ≤ 16'

NOTES:

1. This configuration shall be used where W-beam guardrail is specified along the median-side shoulder of a divided roadway to shield the support of a tandem overhead structure.
2. Dimensions and details not shown hereon shall be as shown on the plans.

(3) Rectangular plate washers shall be installed at each post along this section. See Standard Drawing E 601-GRBS-08.

INDIANA DEPARTMENT OF TRANSPORTATION

GUARDRAIL AT MEDIAN-SIDE
BRIDGE SUPPORT

SEPTEMBER 2011

STANDARD DRAWING NO. E 601-GRBS-07

RICHARD L. VanCLEAVE
REGISTERED
No. 9750
STATE OF INDIANA
PROFESSIONAL ENGINEER

DESIGN STANDARDS ENGINEER

/s/ Richard L. VanCleave 09/01/11
DESIGN STANDARDS ENGINEER DATE

/s/ Mark A. Miller 09/01/11
CHIEF HIGHWAY ENGINEER DATE

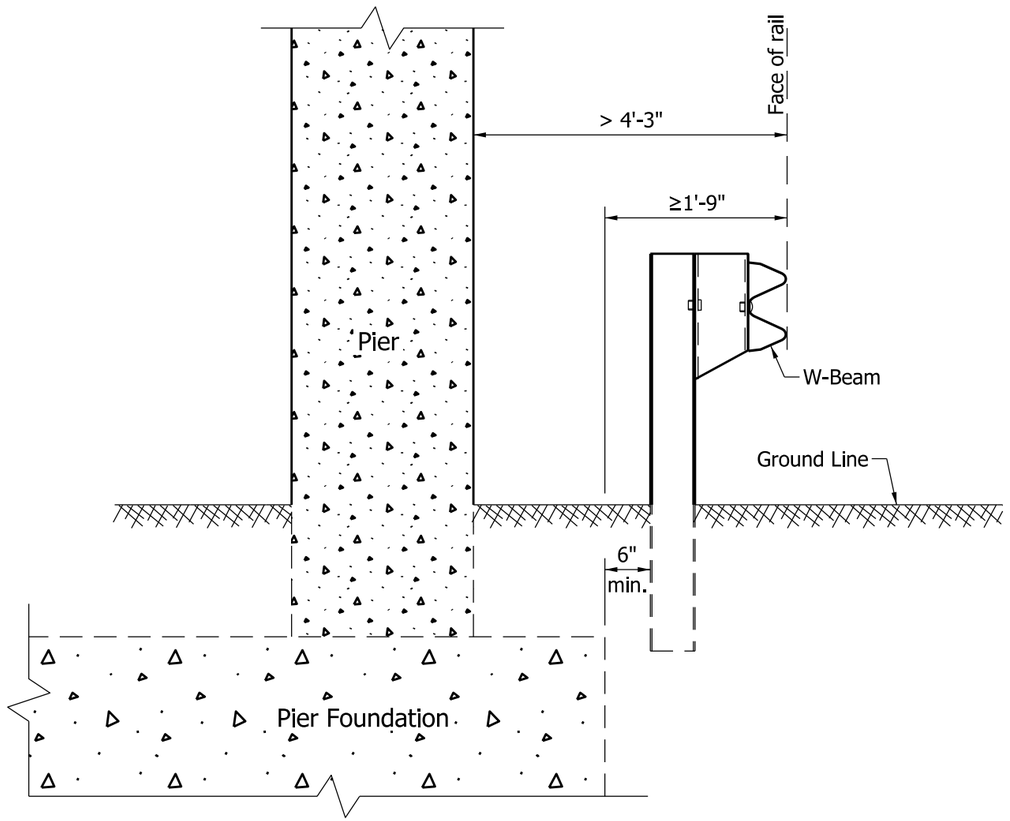

GUARDRAIL-TO-PIER CLEARANCE

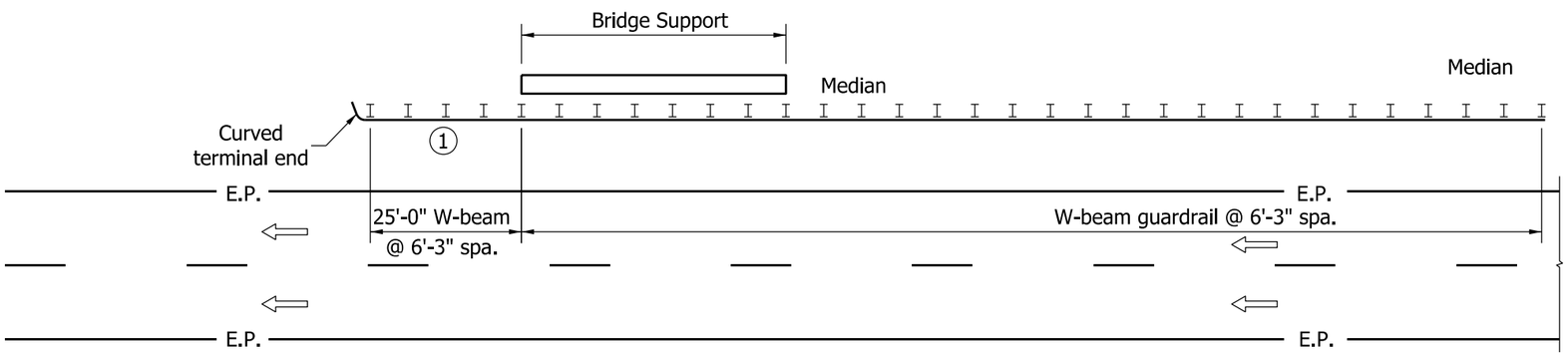

DOWNSTREAM GUARDRAIL TREATMENT

NOTE:

(1) Washers required for each post in this section shall be rectangular plate washers, as shown on Standard Drawing E 601-WBGC-02.

INDIANA DEPARTMENT OF TRANSPORTATION

GUARDRAIL AT BRIDGE SUPPORT

SEPTEMBER 2011

STANDARD DRAWING NO. E 601-GRBS-08

RICHARD L. VanCLEAVE REGISTERED No. 9750 STATE OF INDIANA PROFESSIONAL ENGINEER

DESIGN STANDARDS ENGINEER

/s/ Richard L. VanCleave 09/01/11

DESIGN STANDARDS ENGINEER DATE

/s/ Mark A. Miller 09/01/11

CHIEF HIGHWAY ENGINEER DATE

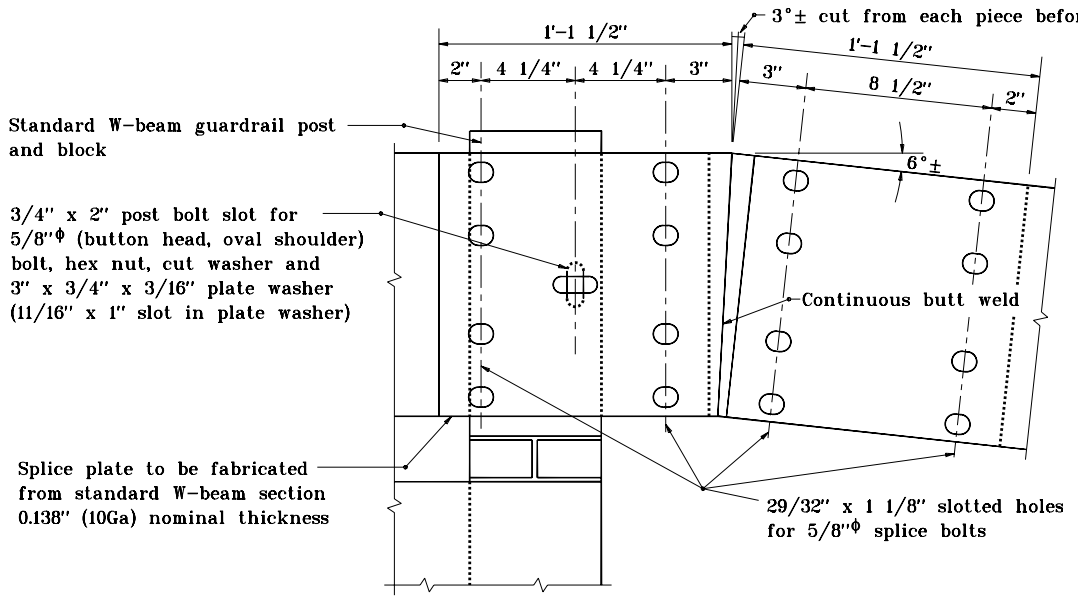

SPLICE PLATE ASSEMBLY DETAIL

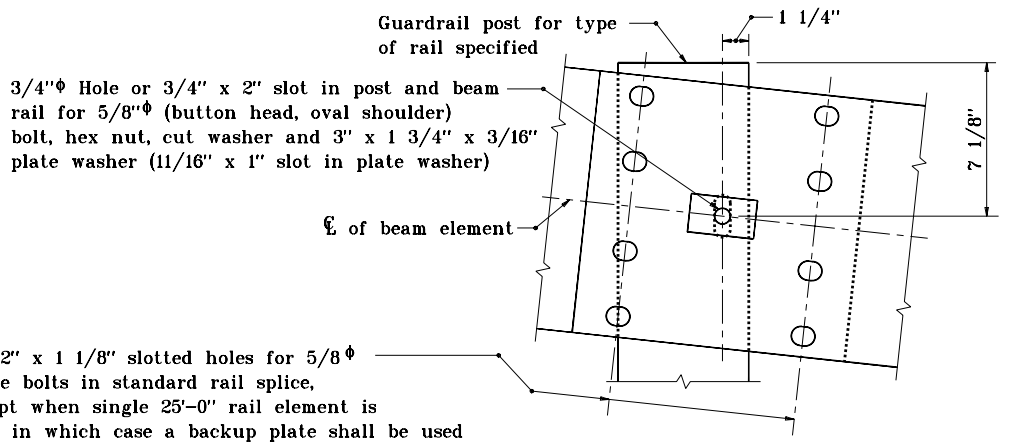

POST NO. 2 CONNECTION DETAIL

GENERAL NOTES

1. This sheet shall be used when guardrail end treatment type I is specified
2. The details on this sheet are for the assembly and the installation of the components of guardrail end treatment type I.

INDIANA DEPARTMENT OF TRANSPORTATION

GUARDRAIL END TREATMENT TYPE I

APRIL 1995

STANDARD DRAWING NO. **E 601-GRET-04**

ANTHONY L. UREMOVICH REGISTERED No. 18095 STATE OF INDIANA PROFESSIONAL ENGINEER

DESIGN STANDARDS ENGINEER

DETAILS PLACED IN THIS FORMAT 11-15-99

/s/ Anthony L. Uremovich 11-15-99
DESIGN STANDARDS ENGINEER DATE

/s/ Firooz Zandi 11-15-99
CHIEF HIGHWAY ENGINEER DATE

ORIGINALLY APPROVED 4-03-95

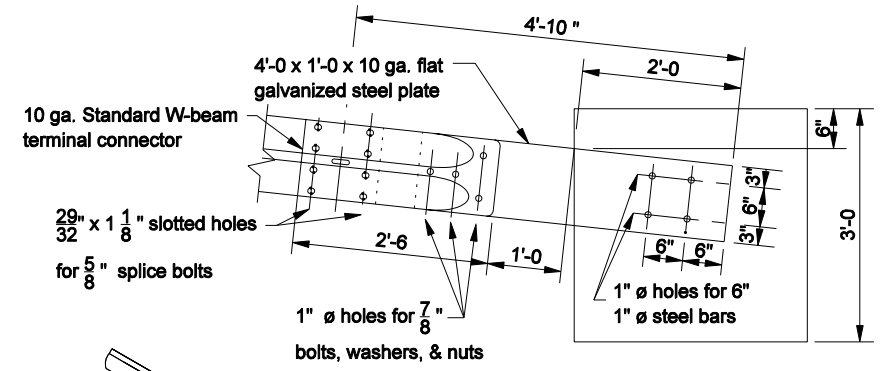

CONCRETE ANCHOR DETAIL

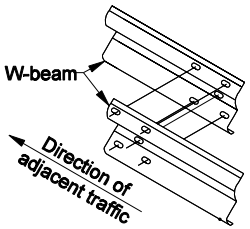

LAP DETAIL

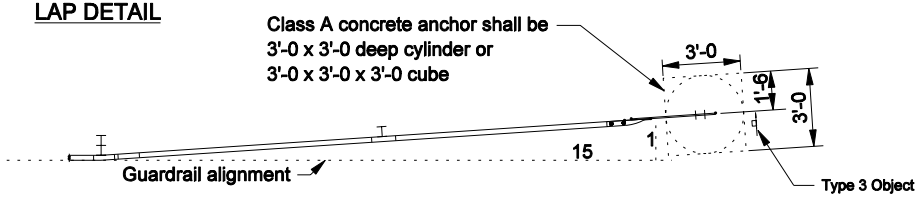

PLAN

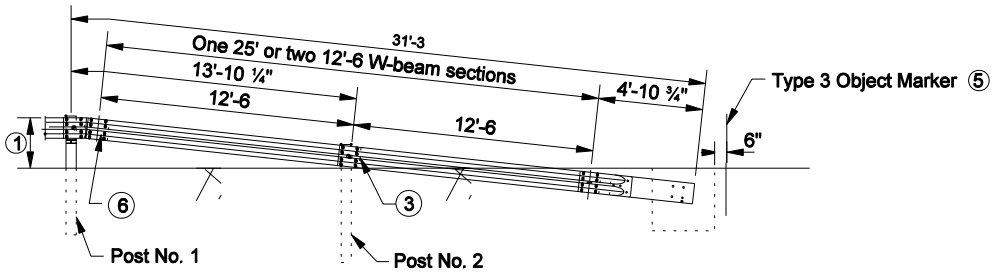

Post No. 1 & No. 2 length = 6'-0

ELEVATION

GENERAL NOTES

① The top of rail height at this post shall match the height of the adjacent guardrail.

2. Installation of guardrail end treatment type I at the end of a run of rub-rail type guardrail shall require the relocation of the rub-rail as shown.

③ See Standard Drawing E 601-GRET-04 for Post No.2 Connection Detail.

④ If rub-rail is not spliced at post, the channel shall be cut and repositioned behind the post flange.

⑤ See Standard Drawing E 808-MKNB-03 for Object Marker Type 3 Details.

⑥ See Standard Drawing E 601-GRET-04 for Splice Plate Assembly Detail.

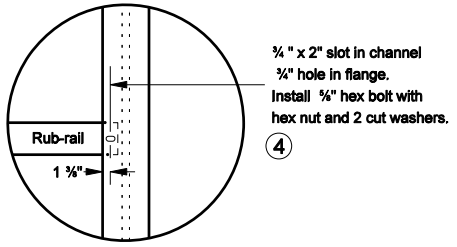

RUB-RAIL RELOCATION DETAIL

INDIANA DEPARTMENT OF TRANSPORTATION

GUARDRAIL END TREATMENT TYPE I

SEPTEMBER 2006

STANDARD DRAWING NO. E 601-GRET-05

RICHARD L. VanCLEAVE REGISTERED No. 9750 STATE OF INDIANA PROFESSIONAL ENGINEER

DESIGN STANDARDS ENGINEER

/s/ Richard L. VanCleave 9-01-06
DESIGN STANDARDS ENGINEER DATE

/s/ Richard K. Smutzer 9-01-06
CHIEF HIGHWAY ENGINEER DATE

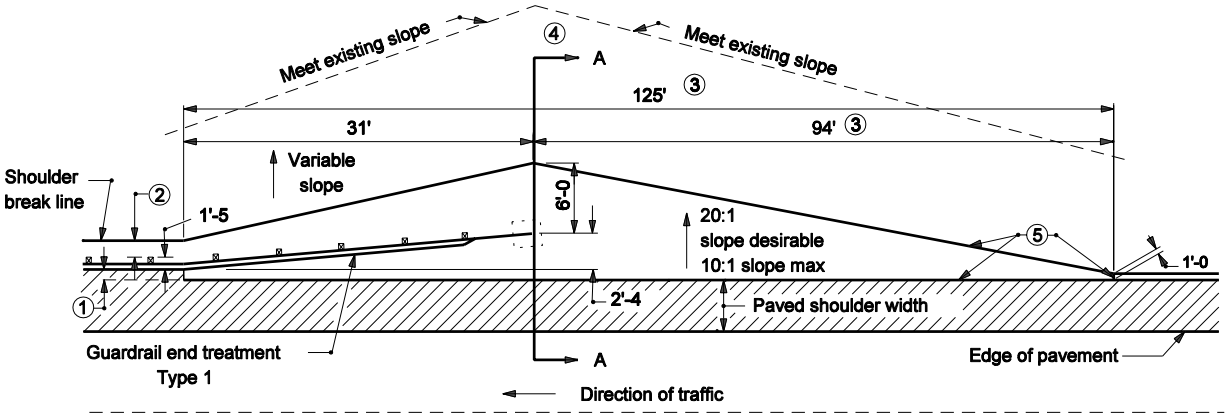

PLAN VIEW

GRADING DETAIL FOR GUARDRAIL END TREATMENT TYPE I

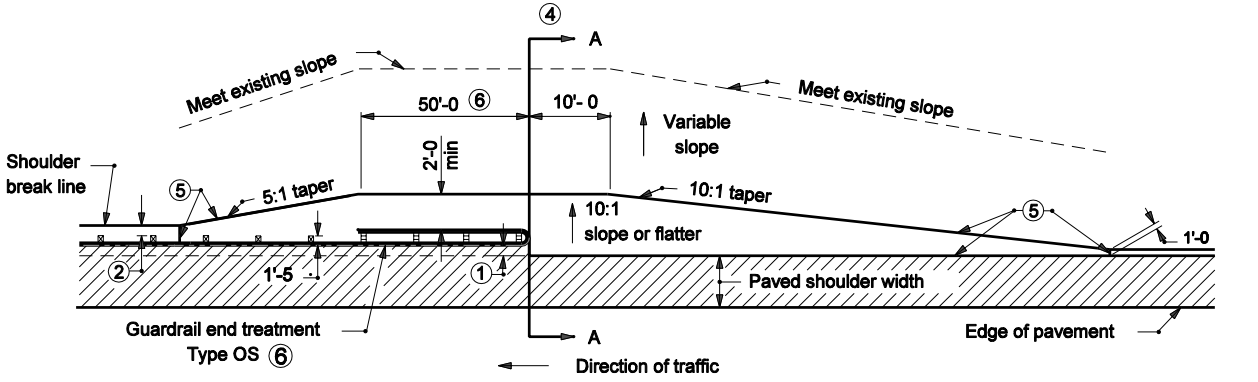

PLAN VIEW

GRADING DETAIL FOR GUARDRAIL END TREATMENT TYPE OS

NOTES:

① The required guardrail offset shall be 0 to 2'-0" desirable as specified in The plans. The offset used between the the edge of required shoulder and the face of rail shall also be used to establish the berm width at the end of the guardrail end treatment.

② This distance may vary from 0 to 2'-0" desirable.

③ These dimensions are based on a 2'-0" guardrail offset and must be adjusted for other offset distances to maintain a 10:1 taper.

④ Grading profiles at Section A-A for types OS and type I guardrail end treatments are shown on Standard Drawings E 601-GRET-08, and -09.

⑤ Limits of compacted aggregate.

⑥ Length and width of OS Unit Test Level 3 (TL-3)
Length = 50'-0"
Width = 2'-0"

INDIANA DEPARTMENT OF TRANSPORTATION

GRADING AT GUARDRAIL END TREATMENTS

March 2004

STANDARD DRAWING NO. E 601-GRET-06

ANTHONY L. UREMOVICH REGISTERED No. 18095 STATE OF INDIANA PROFESSIONAL ENGINEER

DESIGN STANDARDS ENGINEER

/s/ Anthony L.Uremovich 3-01-04
DESIGN STANDARDS ENGINEER DATE

/s/ Richard K.Smutzer 3-01-04
CHIEF HIGHWAY ENGINEER DATE

NOTES:

① This distance may vary from 0 to 2'-0" desirable.

② If necessary, move existing ditch line to obtain a 4:1 slope.

③ Length and width of MS Unit Test Level 3 (TL-3) and transition rail where required:
Length = 31'-3" (MS unit) + 12' - 6" (transition rail) = 43' - 9" (typ)
Width = 2'-4"

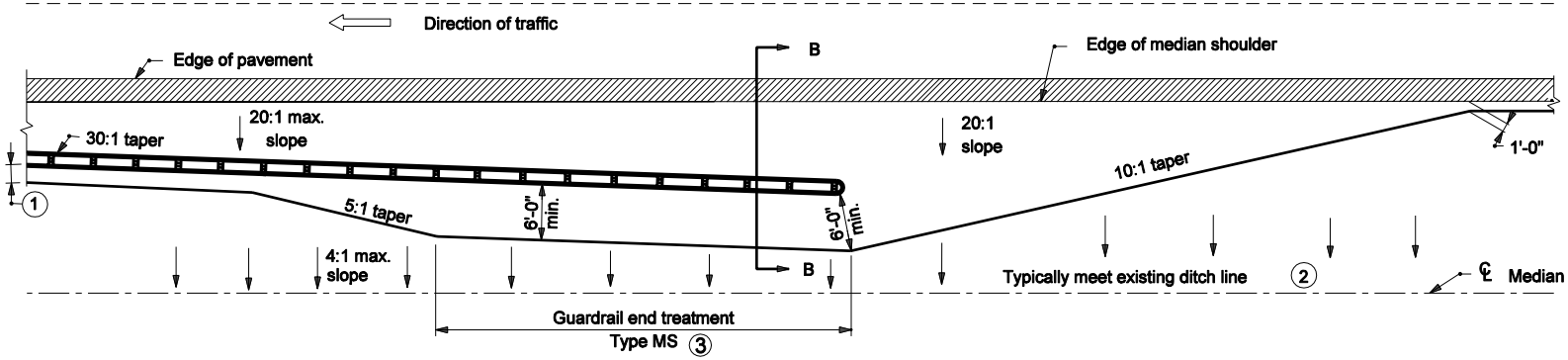

PLAN VIEW - GRADING DETAIL FOR G.R.E.T. TYPE MS ON FLARE

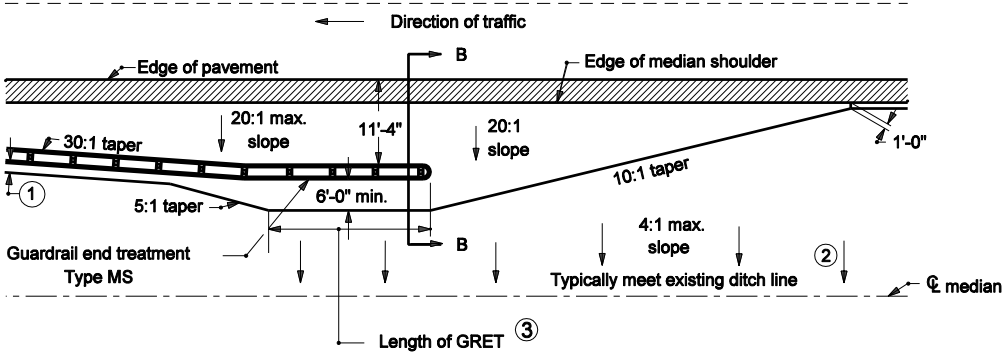

PLAN VIEW

GRADING DETAIL FOR GUARDRAIL END TREATMENT TYPE MS PARALLEL TO SHOULDER

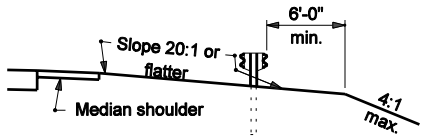

SECTION B-B

INDIANA DEPARTMENT OF TRANSPORTATION

GRADING AT GUARDRAIL END TREATMENT

MARCH 2005

STANDARD DRAWING NO. E 601-GRET-07

RICHARD L. VanCLEAVE REGISTERED No. 9750 STATE OF INDIANA PROFESSIONAL ENGINEER

DESIGN STANDARDS ENGINEER

/s/ Richard L. VanCleave 3-01-05
DESIGN STANDARDS ENGINEER DATE

/s/ Richard K. Smutzer 3-01-05
CHIEF HIGHWAY ENGINEER DATE

NOTES:

1. Grading cross section Option 1 is most desirable and shall be used on new construction. Option 7 is least desirable. The grading cross section to be used shall be as detailed or specified on the plans. A more desirable option may be used in lieu of the option specified.

② The backslope on Option 3 shall not exceed 2:1 on 3R projects.

③ Benching required for existing slopes steeper than 4:1.

④ See plan views on Standard Drawing E 601-GRET-06.

⑤ Plow or deeply scarify for existing slopes 4:1 or flatter.

6. Section A-A Options 1, 2, and 3 may be used with guardrail end treatment type I or OS.

Recoverable Proposed Slopes (Options 1, 2, and 3)

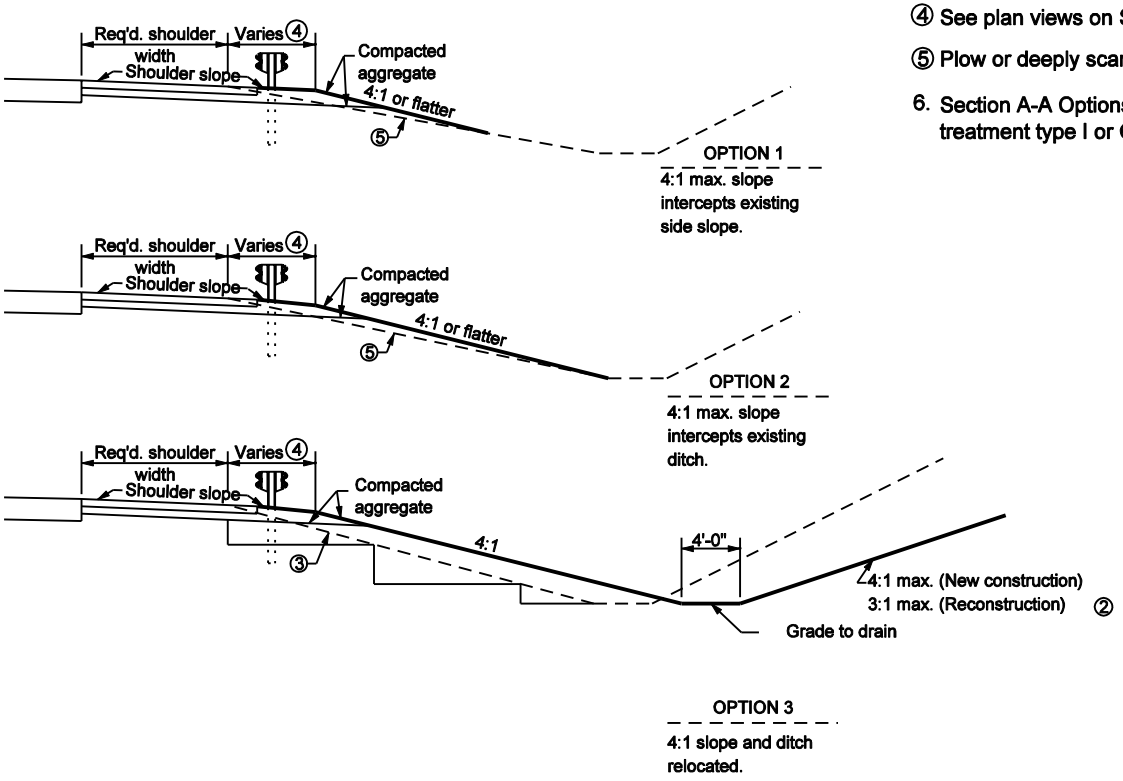

GRADING CROSS SECTIONS AT SECTION A-A

INDIANA DEPARTMENT OF TRANSPORTATION

GRADING AT GUARDRAIL END TREATMENT

SEPTMBER 2002

STANDARD DRAWING NO. E 601-GRET-08

RICHARD L. VanCLEAVE REGISTERED No. 9750 STATE OF INDIANA PROFESSIONAL ENGINEER

DESIGN STANDARDS ENGINEER

/s/ Richard L VanCleave 9-03-02
DESIGN STANDARDS ENGINEER DATE

/s/ Richard K. Smutzer 9-03-02
CHIEF HIGHWAY ENGINEER DATE

Non-Recoverable Proposed Slopes (Options 4, 5, 6 and 7)

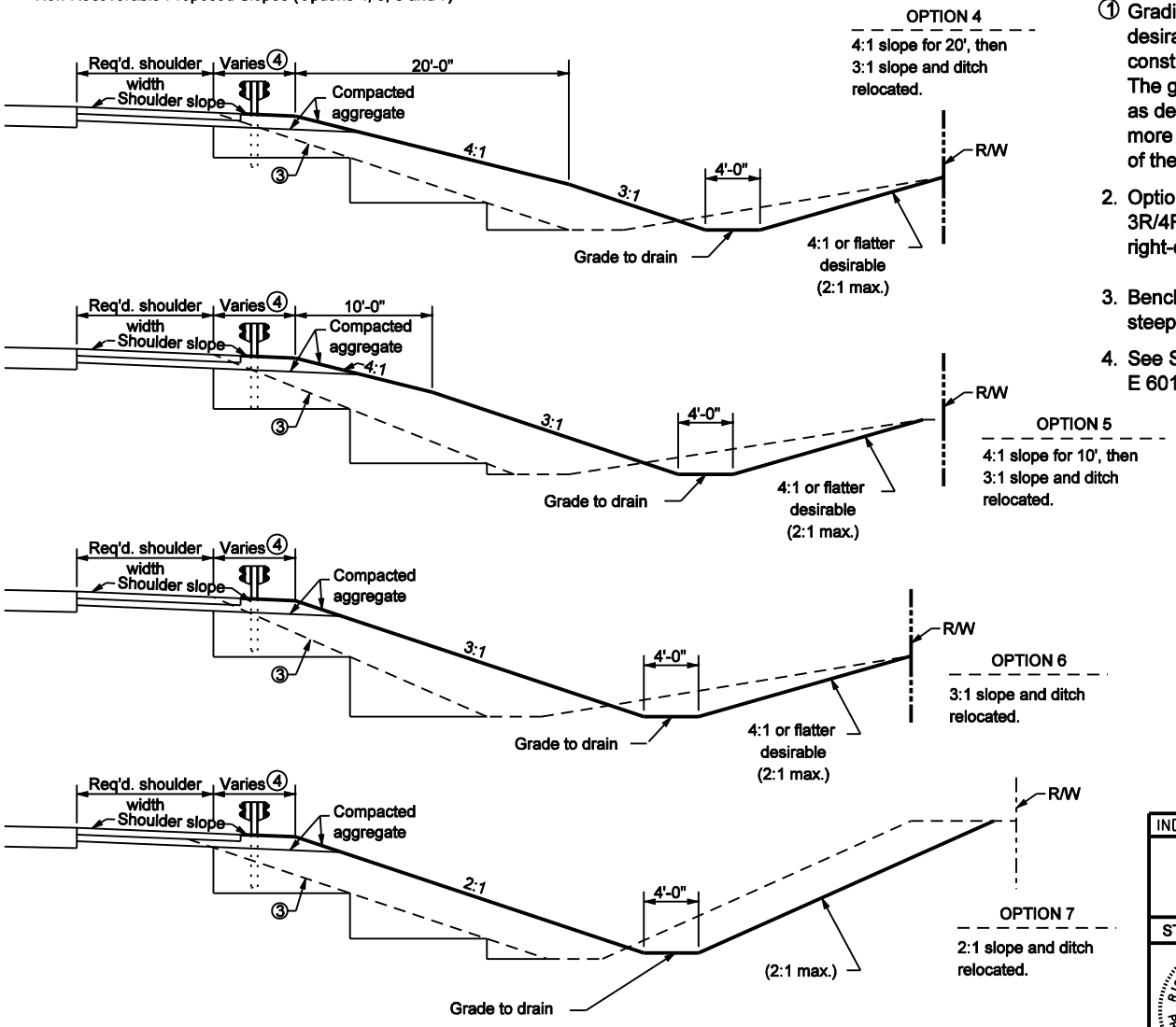

GRADING CROSS SECTIONS AT SECTION A-A

NOTES:

① Grading cross section Option 1 is most desirable and shall be used on new construction. Option 7 is least desirable. The grading cross section to used shall be as detailed or specified on the plans. A more desirable option may be used in lieu of the option specified.

2. Options 4 through 7 may only be used on a 3R/4R partial reconstruction project with right-of-way restrictions.

3. Benching required for existing slopes steeper than 4:1.

4. See Standard Drawing E 601-GRET-06 for plan views.

INDIANA DEPARTMENT OF TRANSPORTATION

GRADING AT GUARDRAIL END TREATMENTS

SEPTEMBER 2002

STANDARD DRAWING NO. E 601-GRET-09

RICHARD L. VanCLEAVE REGISTERED No. 9750 STATE OF INDIANA PROFESSIONAL ENGINEER

DESIGN STANDARDS ENGINEER

/s/ Richard L VanCleave 9-03-02
DESIGN STANDARDS ENGINEER DATE

/s/ Richard K. Smutzer 9-03-02
CHIEF HIGHWAY ENGINEER DATE

DITCH DETAIL

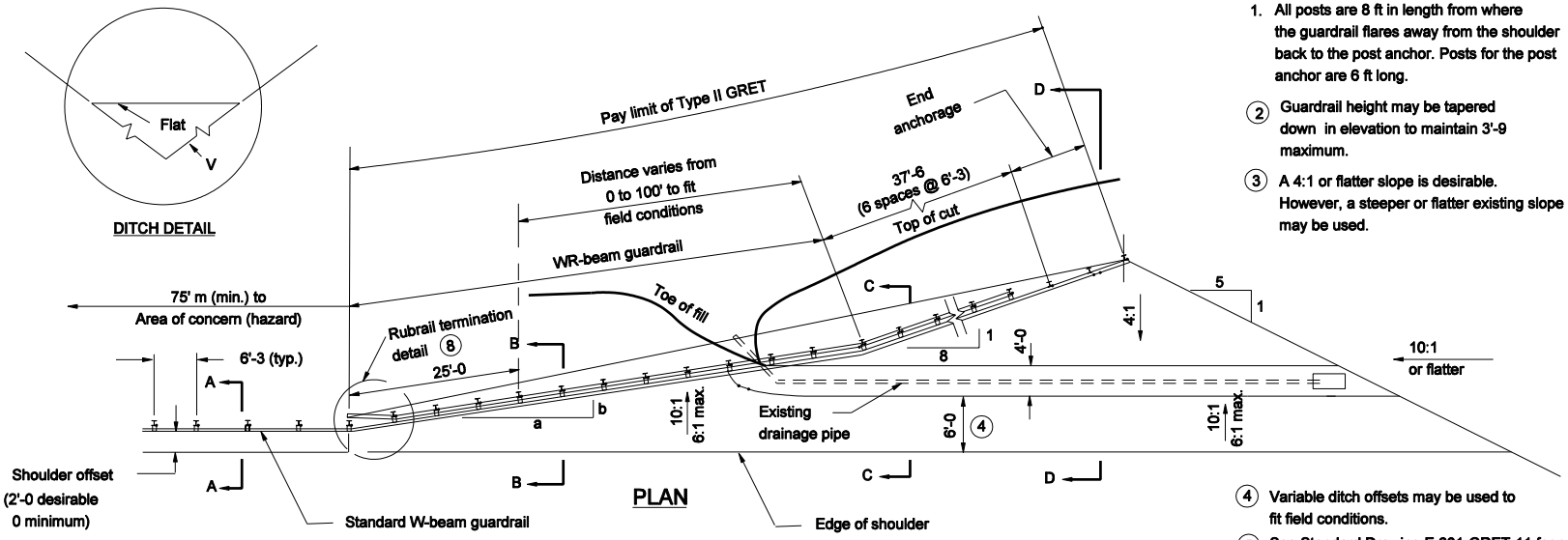

PLAN

Design speed mph	a:b
≥ 60	13:1
55	12:1
50	11:1
45 or less	10:1

a:b RATIO

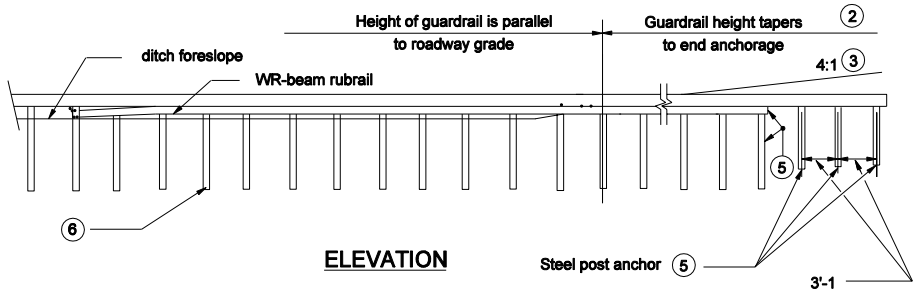

ELEVATION

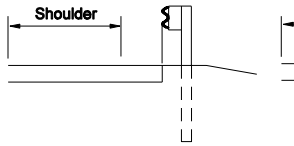

SECTION A-A

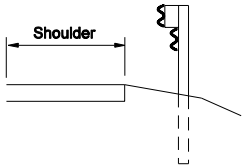

SECTION B-B
(WITH RUBRAIL)

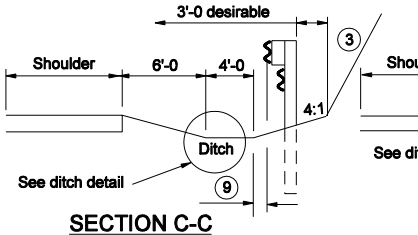

SECTION C-C
(WITH RUBRAIL)

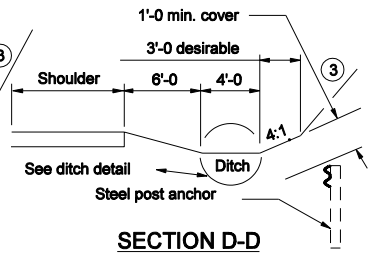

SECTION D-D

NOTES:

1. All posts are 8 ft in length from where the guardrail flares away from the shoulder back to the post anchor. Posts for the post anchor are 6 ft long.
2. (2) Guardrail height may be tapered down in elevation to maintain 3'-9 maximum.
3. (3) A 4:1 or flatter slope is desirable. However, a steeper or flatter existing slope may be used.
4. (4) Variable ditch offsets may be used to fit field conditions.
5. (5) See Standard Drawing E 601-GRET-11 for rub rail anchor details and post anchor details.
6. (6) See Standard Drawing E 601-WBGA-06 for steel post and wood block details.
7. Ditch cross section profile should be same as upstream ditch cross section profile and have same or greater hydraulic capacity.
8. (8) See Standard Drawing E 601-WBGA-06 for detail.
9. (9) Posts shall be installed offset from the required ditch cross section to maintain ditch's hydraulic capacity.

INDIANA DEPARTMENT OF TRANSPORTATION

GUARDRAIL END TREATMENT TYPE II

SEPTEMBER 2004

STANDARD DRAWING NO. E 601-GRET-10

REGISTERED RICHARD L. VanCLEAVE No. 9750 STATE OF INDIANA PROFESSIONAL ENGINEER

DESIGN STANDARDS ENGINEER

/s/ Richard L. VanCleave 9-01-04
DESIGN STANDARDS ENGINEER DATE

/s/ Richard K. Smutzer 9-01-04
CHIEF HIGHWAY ENGINEER DATE

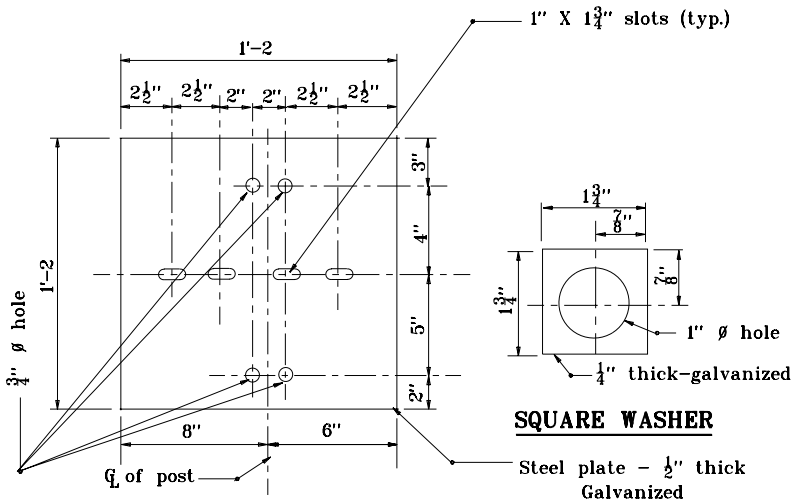

SQUARE WASHER

STEEL PLATE DETAIL

STEEL PLATE AND WASHER DETAILS

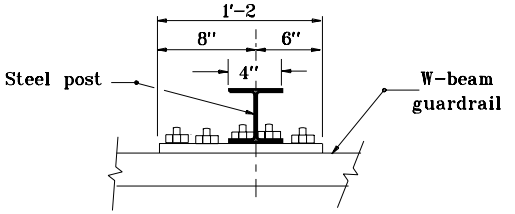

PLAN

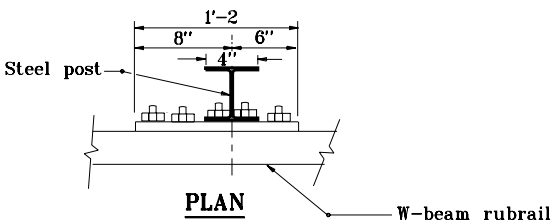

PLAN

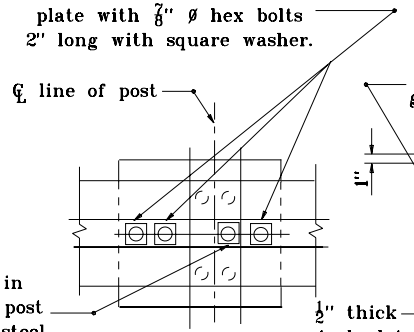

FRONT VIEW

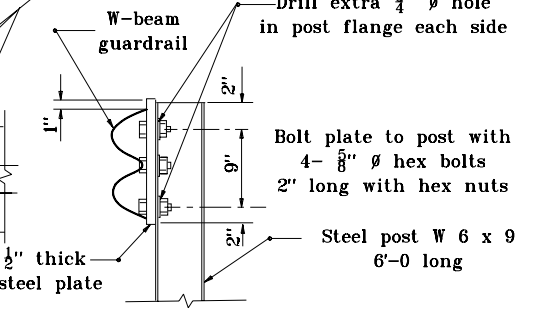

ELEVATION

POST ANCHOR DETAILS

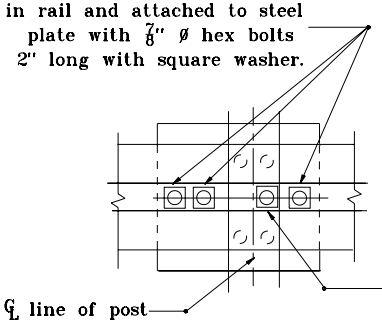

FRONT VIEW

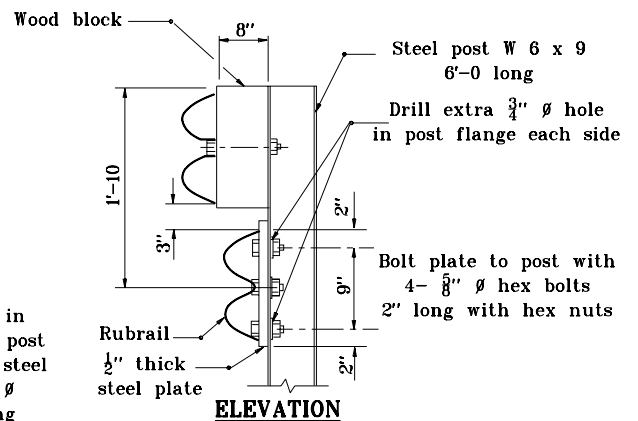

ELEVATION

RUBRAIL ANCHOR DETAILS

INDIANA DEPARTMENT OF TRANSPORTATION

GUARDRAIL END TREATMENT TPPE II–COMPONENTS

SEPTEMBER 2000

STANDARD DRAWING NO. **E 601–GRET–11**

ANTHONY L. UREMOVICH REGISTERED No. 18095 STATE OF INDIANA PROFESSIONAL ENGINEER

DESIGN STANDARDS ENGINEER

/s/ Anthony L. Uremovich 9–01–00
DESIGN STANDARDS ENGINEER — DATE

/s/ Firooz Zandi 9–01–00
CHIEF HIGHWAY ENGINEER — DATE

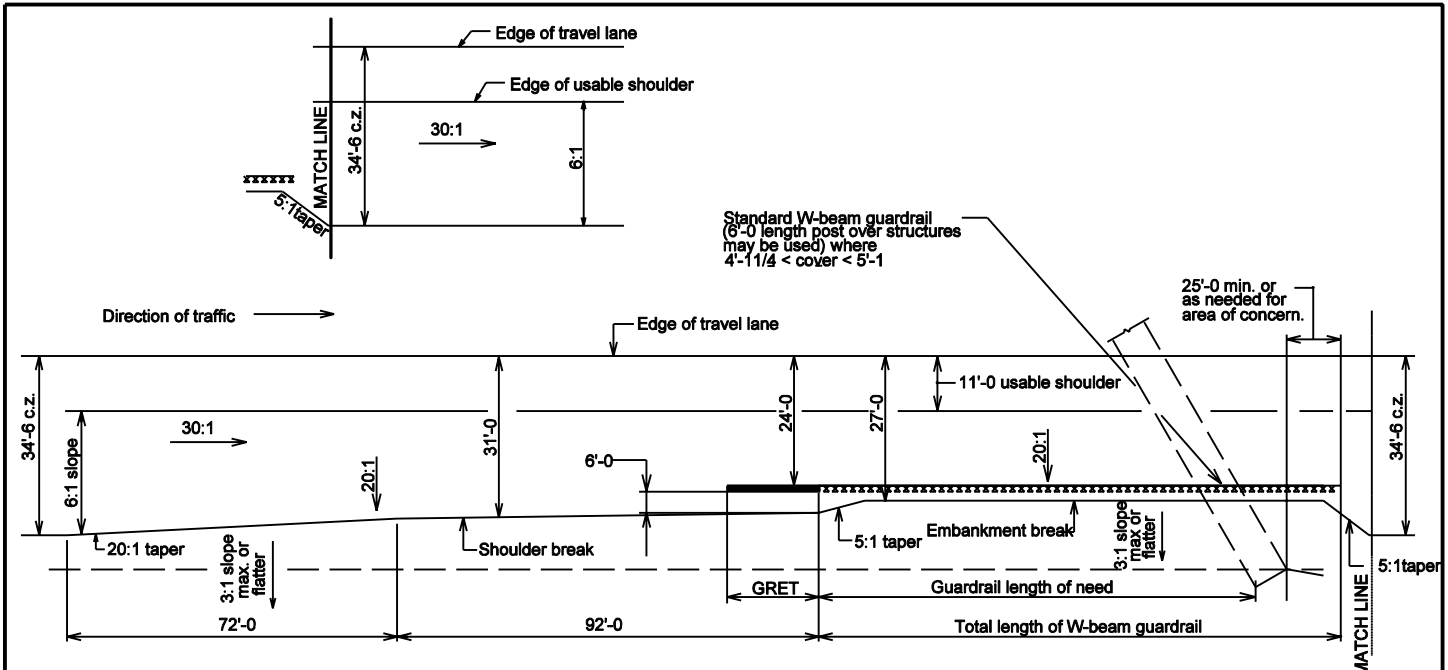

PLAN

NOTES:

1. Grading requirements shown are for 5'-6 or larger structures, and three-sided structures on project constructed on new alignment for design speed of 70 mph rural divided highway.
2. Grading shown above is applicable for 25'-0 span nested guardrail also.
3. Grading requirements for 5'-6 or larger structures and three sided structures constructed on existing alignments at all design speeds are shown in standard Drawings E 601-GRET 06 through 09.

INDIANA DEPARTMENT OF TRANSPORTATION

GRADING REQUIREMENTS FOR LARGE DRAINAGE STRUCTURE

SEPTEMBER 2001

STANDARD DRAWING NO. E 601-GRET-12

RICHARD L. VANCLEAVE REGISTERED NO. 9750 STATE OF INDIANA PROFESSIONAL ENGINEER

DESIGN STANDARDS ENGINEER

/s/ Richard L.VanCleave 9-04-01
DESIGN STANDARDS ENGINEER DATE

/s/ Firooz Zandi 9-04-01
CHIEF HIGHWAY ENGINEER DATE

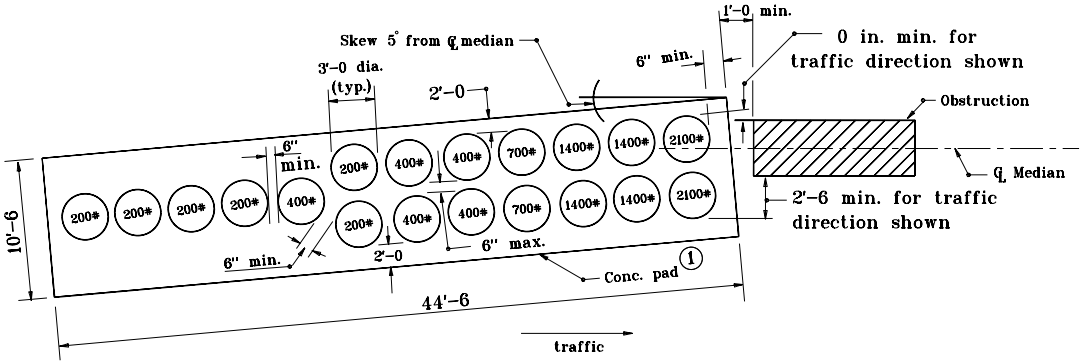

CONCRETE PAD PLAN IMPACT ATTENUATOR TYPE ED GRAVEL BARREL ARRAY FOR TEST LEVEL 3

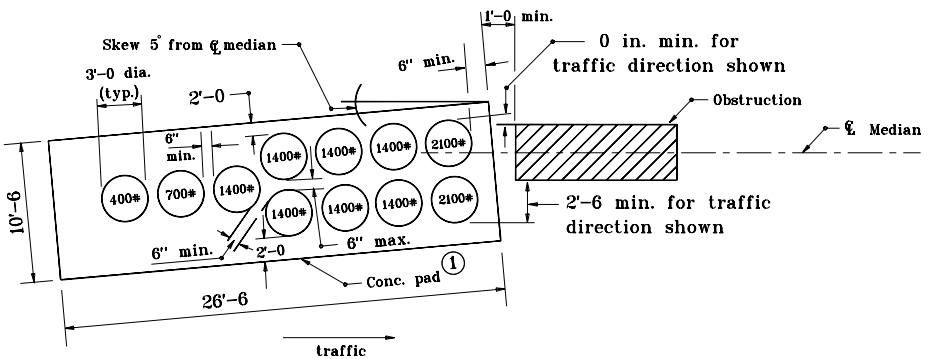

CONCRETE PAD PLAN IMPACT ATTENUATOR TYPE ED GRAVEL BARREL ARRAY FOR TEST LEVEL 2

NOTES:

1. Concrete pad shall be 6" thick with welded wire fabric 6" x 6", W3/W3 or equivalent. A clearance of 2" shall be provided between all sides and top of concrete pad and welded wire fabric.
2. Appropriate impact attenuator Test Level shall be used to determine the concrete pad size and gravel barrel layout.
3. See Standard Drawings E 601-GAIA-01, 01A and 02 for grading details.
4. The details shown are for an impact attenuator type ED, gravel barrel array with a maximum obstruction width of 3'-0.

INDIANA DEPARTMENT OF TRANSPORTATION

IMPACT ATTENUATOR ED LAYOUT

MARCH 2002

STANDARD DRAWING NO. **E 601-IAED-01**

RICHARD L. VanCLEAVE REGISTERED No. 9750 STATE OF INDIANA PROFESSIONAL ENGINEER

DESIGN STANDARDS ENGINEER

/s/ Richard L. VanCleave 3-01-02
DESIGN STANDARDS ENGINEER — DATE

/s/ Richard K. Smutzer 3-01-02
CHIEF HIGHWAY ENGINEER — DATE

INDEX	
SHEET NO.	SUBJECT
1	Midwest Guardrail System Assembly Index and General Notes
2 - 5	Midwest Guardrail System Assembly
6 - 7	Midwest Guardrail System Assembly, Omitted Post
8 - 9	Midwest Guardrail System Assembly, Long-Span
10	Midwest Guardrail System Assembly, Structure Top-Mounted Post
11	Midwest Guardrail System Assembly, Guardrail Transition with Curb
12	Midwest Guardrail System Assembly, Guardrail Transition without Curb
13 - 15	Midwest Guardrail System Assembly, Guardrail Transition
16	Midwest Guardrail System Assembly, Height Transition
17 - 22	Midwest Guardrail System Assembly, Cable Terminal Anchor System
23	Midwest Guardrail System Assembly, Working Width

GENERAL NOTES:

1. The Midwest Guardrail System (MGS) is a steel or timber post w-beam guardrail semi-rigid longitudinal barrier system. The standard post length for MGS w-beam guardrail shall be 6 ft, unless noted otherwise.

2. MGS w-beam guardrail, omitted post, long-span, structure top-mount, guardrail transition, and cable terminal anchor are MASH TL-3 compliant.

3. Steel guardrail post W 6 x 8.5 may be substituted for W 6 x 9.

INDIANA DEPARTMENT OF TRANSPORTATION

MIDWEST GUARDRAIL SYSTEM
ASSEMBLY INDEX AND GENERAL NOTES

SEPTEMBER 2018

STANDARD DRAWING NO. E 601-MGSA-01

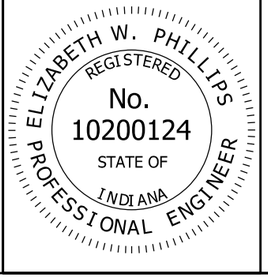

/s/ Elizabeth W. Phillips *03/20/18*
DESIGN STANDARDS ENGINEER DATE

/s/ John Leckie *04/25/18*
CHIEF ENGINEER DATE

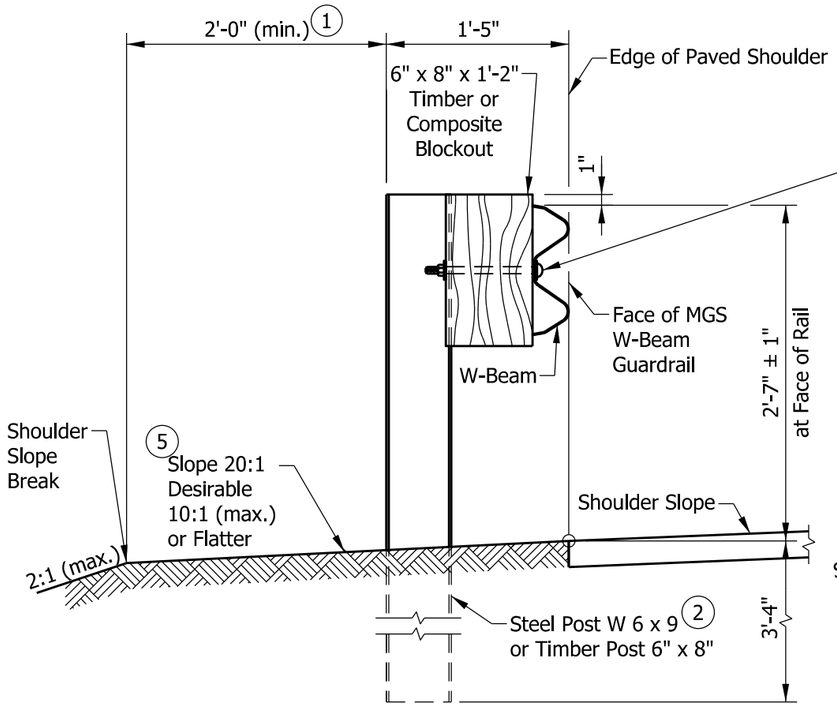

TYPICAL MGS W-BEAM INSTALLATION

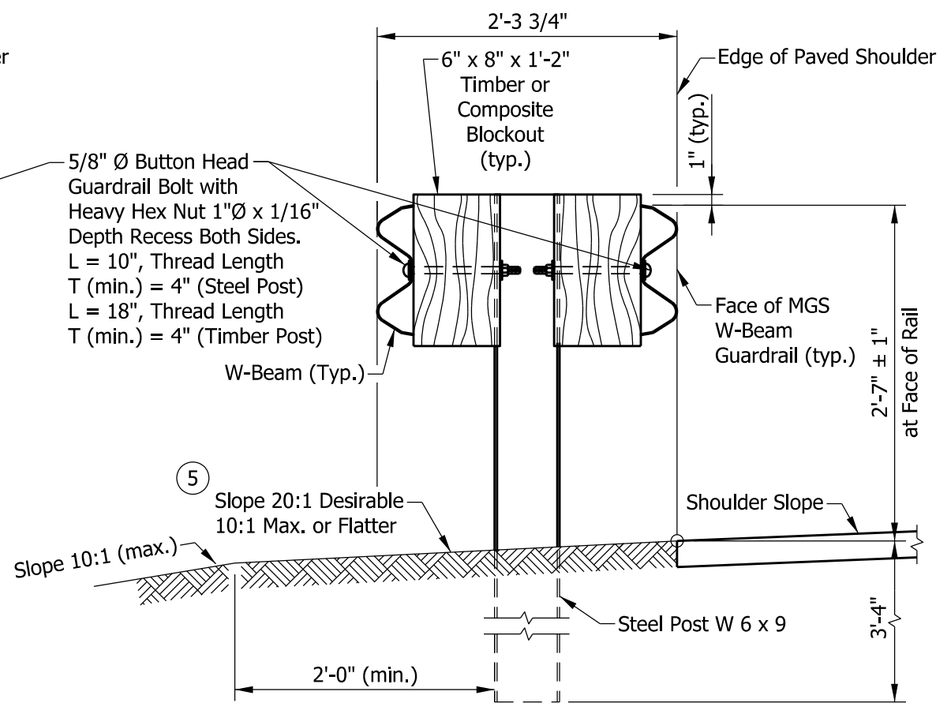

TYPICAL DOUBLE-FACED MGS W-BEAM INSTALLATION

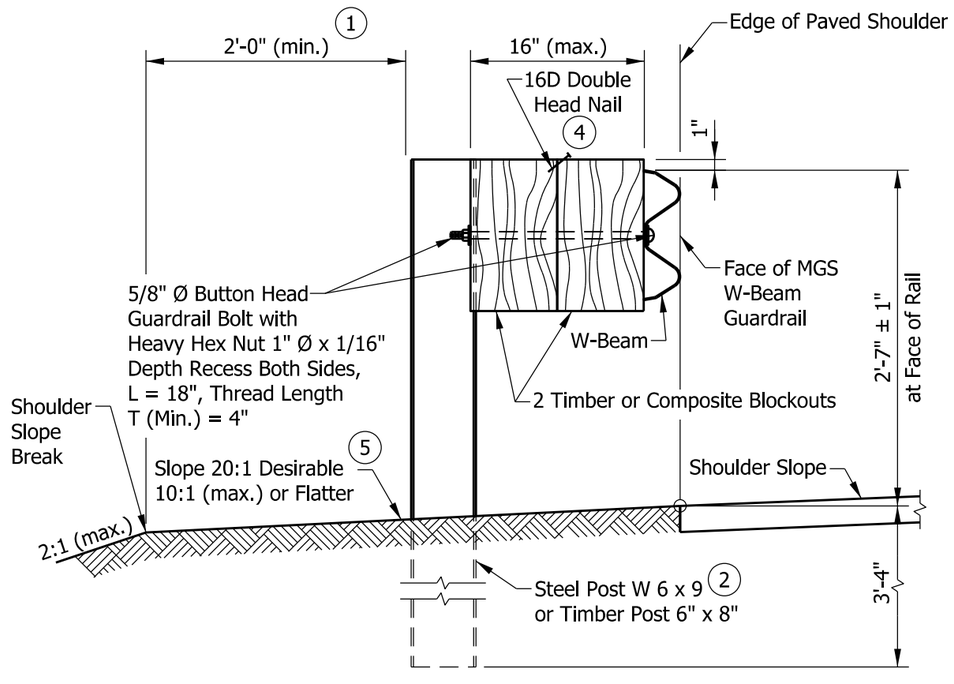

DETAIL FOR ALTERNATE BLOCKOUT DEPTH 3

NOTES:

1. Where the distance from back of post to shoulder slope break is less than 2 ft, the working width shall be adjusted. See Standard Drawing E 601-MGSA-23.
2. Timber and steel posts shall not be intermixed. See Standard Drawing E 601-MGSA-04 for post details.
3. Blockouts of 12 in. or 16 in. depth may be utilized to increase the post offset. There is no limit to the number of posts that can have additional blockouts up to a 16 in. depth.
4. Where two timber blockouts are installed, one 16D galvanized double head nail shall be centered at the back of the blockout and driven into the adjacent blockout to limit rotation.
5. The post shall not be encased with asphalt, concrete, or riprap.

INDIANA DEPARTMENT OF TRANSPORTATION

MIDWEST GUARDRAIL SYSTEM
ASSEMBLY

SEPTEMBER 2018

STANDARD DRAWING NO. E 601-MGSA-02

ELIZABETH W. PHILLIPS
REGISTERED
No. 10200124
STATE OF INDIANA
PROFESSIONAL ENGINEER

/s/ Elizabeth W. Phillips 03/20/18
DESIGN STANDARDS ENGINEER DATE

/s/ John Leckie 04/25/18
CHIEF ENGINEER DATE

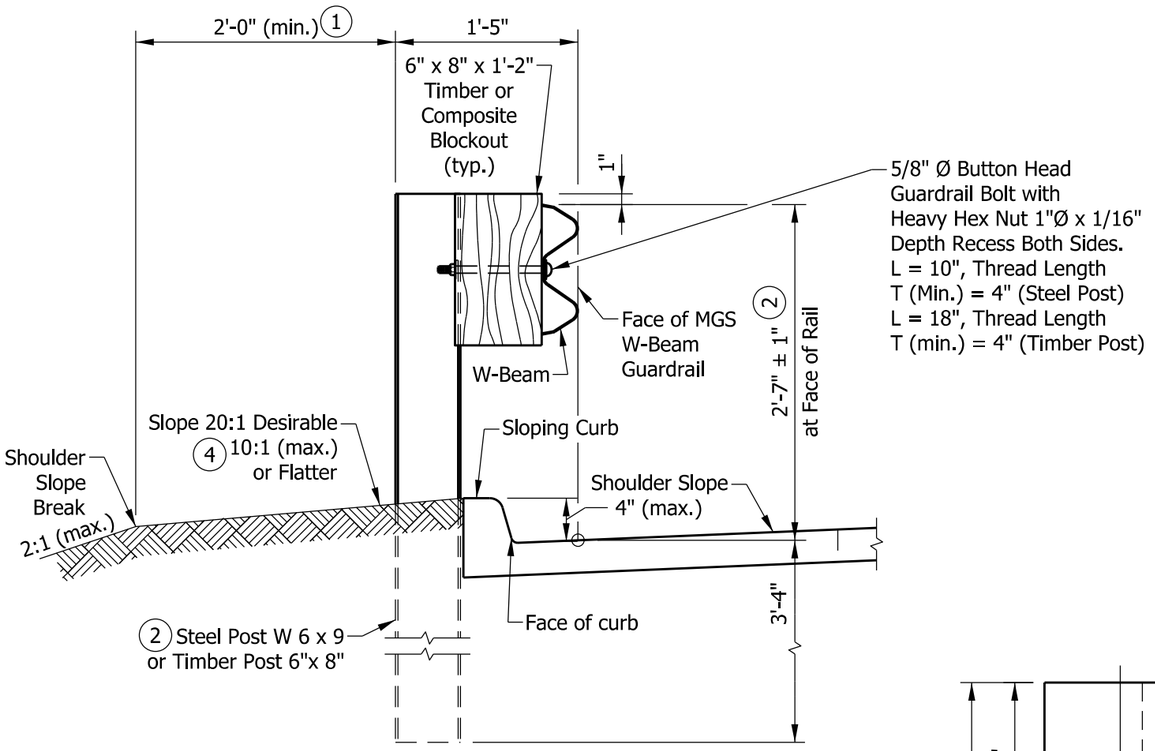

TYPICAL MGS W-BEAM INSTALLATION AT CURB

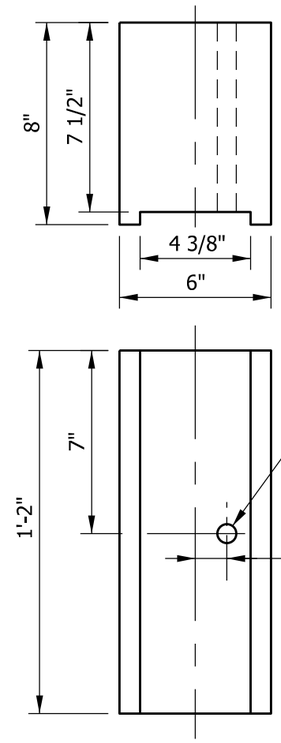

TIMBER OR COMPOSITE BLOCKOUT WITH STEEL POST

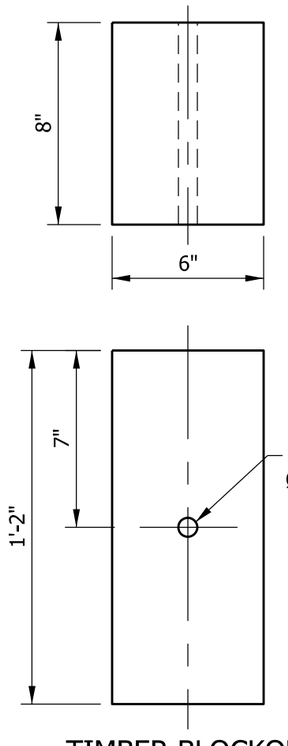

TIMBER BLOCKOUT WITH TIMBER POST

NOTES:

(1) Where the distance from back of post to shoulder slope break is less than 2 ft, the working width shall be adjusted. See Standard Drawing E 601-MGSA-23.

(2) Timber and steel posts shall not be intermixed. See Standard Drawing E 601-MGSA-04 for post details.

3. Blockouts of 12 in. or 16 in. depth may be utilized to increase the post offset. There is no limit to the number of posts that can have additional blockouts up to a 16 in. depth.

(4) The post shall not be encased with asphalt, concrete, or riprap.

INDIANA DEPARTMENT OF TRANSPORTATION

MIDWEST GUARDRAIL SYSTEM ASSEMBLY

SEPTEMBER 2018

STANDARD DRAWING NO. E 601-MGSA-03

ELIZABETH W. PHILLIPS REGISTERED No. 10200124 STATE OF INDIANA PROFESSIONAL ENGINEER

/s/ Elizabeth W. Phillips 03/20/18
DESIGN STANDARDS ENGINEER DATE

/s/ John Leckie 04/25/18
CHIEF ENGINEER DATE

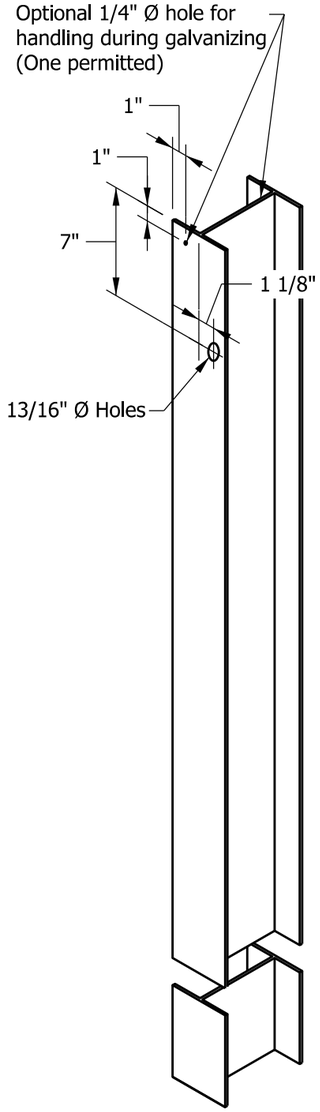

STEEL POST &
HOLE PUNCHING DETAIL
(W 6 X 9) (2)

TIMBER POST
(6" X 8") NOMINAL

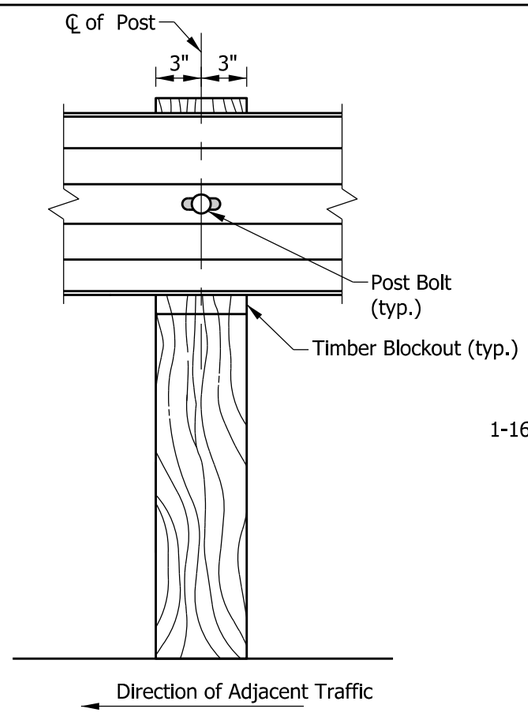

FRONT VIEW (TIMBER POST)

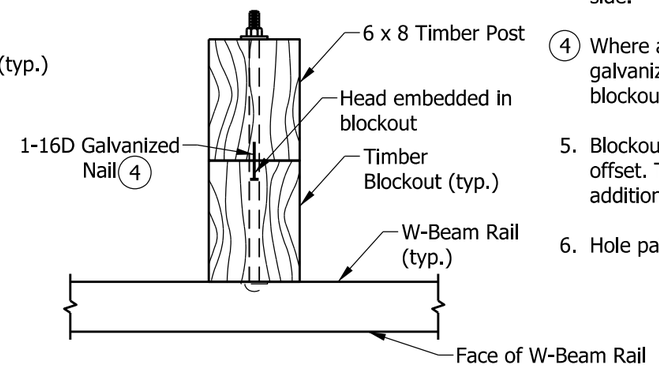

PLAN VIEW (TIMBER POST)

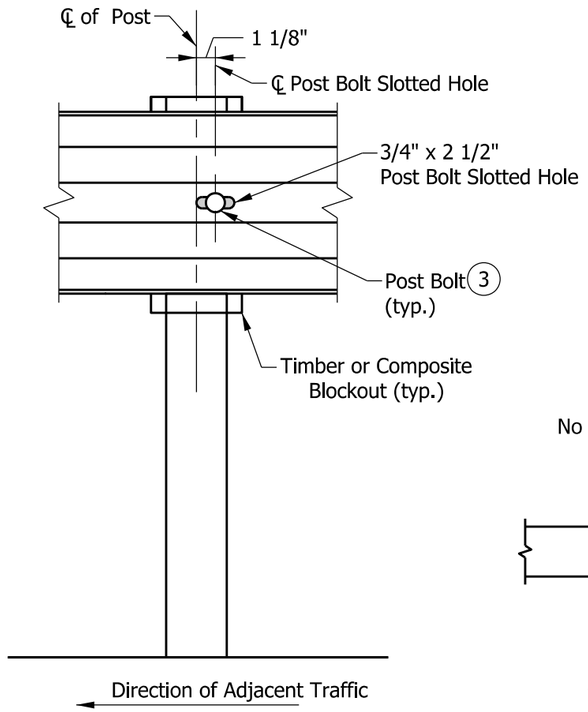

FRONT VIEW (STEEL POST)

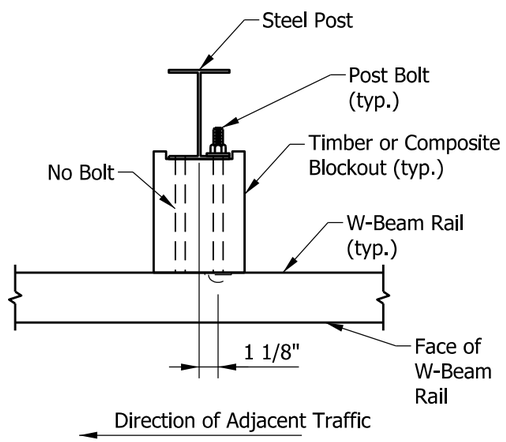

PLAN VIEW (STEEL POST)

NOTES:

1. Timber or steel posts may be used. Timber and steel posts shall not be intermixed.
2. Steel guardrail post W 6 x 8.5 may be substituted for W 6 x 9.
3. Steel posts shall be installed with bolt holes on approaching traffic side.
4. Where a timber post and a timber blockout are installed, one 16D galvanized double head nail shall be centered at the back of the blockout and driven into the adjacent post to limit rotation.
5. Blockouts of 12 in. or 16 in. depth may be utilized to increase the post offset. There is no limit to the number of posts that can have additional blockouts up to a 16 in. depth.
6. Hole pattern for posts may be drilled in back flange.

INDIANA DEPARTMENT OF TRANSPORTATION

MIDWEST GUARDRAIL SYSTEM
ASSEMBLY

SEPTEMBER 2018

STANDARD DRAWING NO. E 601-MGSA-04

ELIZABETH W. PHILLIPS
REGISTERED
No. 10200124
STATE OF INDIANA
PROFESSIONAL ENGINEER

/s/ Elizabeth W. Phillips 03/20/18
DESIGN STANDARDS ENGINEER DATE

/s/ John Leckie 04/25/18
CHIEF ENGINEER DATE

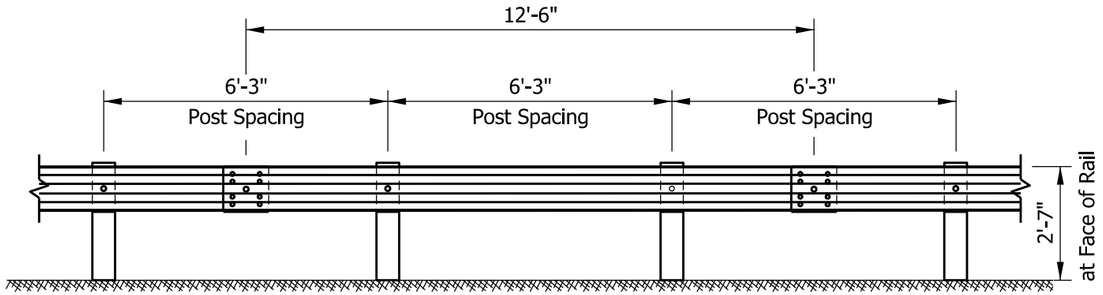

ELEVATION VIEW

MGS W-BEAM STANDARD POST SPACING, 6'-3"

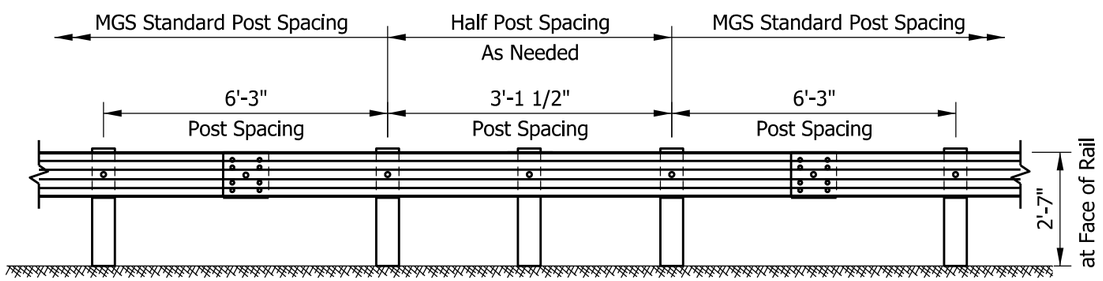

ELEVATION VIEW

MGS W-BEAM HALF POST SPACING, 3'-1 1/2"

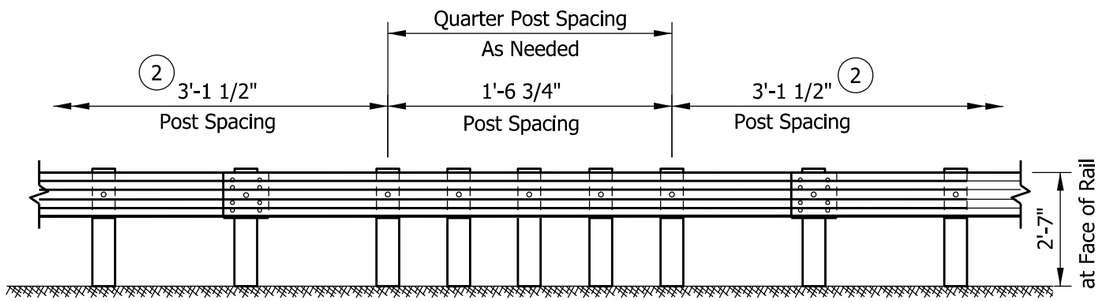

ELEVATION VIEW

MGS W-BEAM QUARTER POST SPACING, 1'-6 3/4"

NOTES:

1. Splice locations shall be as shown.

(2) A minimum of 25 ft of MGS w-beam half post spacing shall be installed on the approach and departure ends of the quarter post spacing.

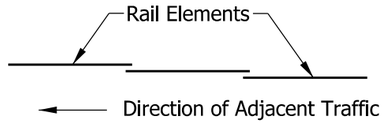

LAPPING PROCEDURE

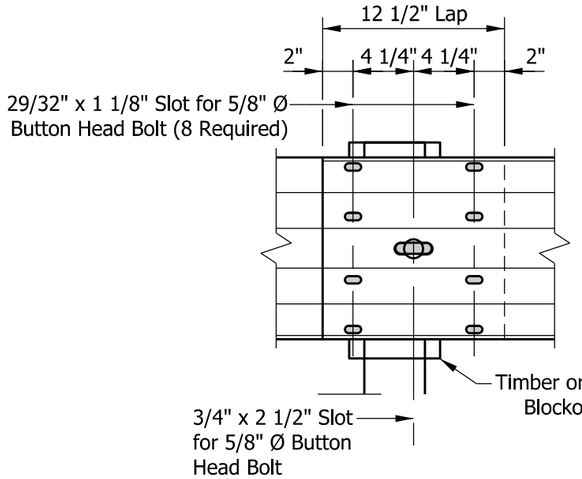

POST SPLICE DETAIL

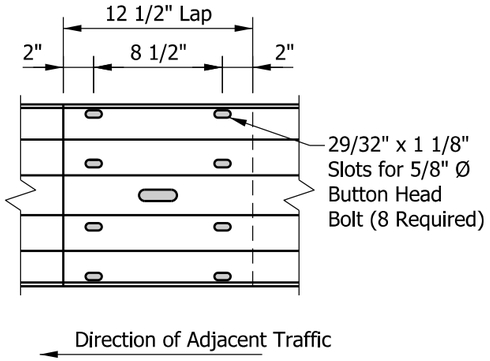

MID-SPAN SPLICE DETAIL

INDIANA DEPARTMENT OF TRANSPORTATION

MIDWEST GUARDRAIL SYSTEM ASSEMBLY

SEPTEMBER 2018

STANDARD DRAWING NO. E 601-MGSA-05

ELIZABETH W. PHILLIPS
REGISTERED
No. 10200124
STATE OF INDIANA
PROFESSIONAL ENGINEER

/s/ Elizabeth W. Phillips 03/20/18
DESIGN STANDARDS ENGINEER DATE

/s/ John Leckie 04/25/18
CHIEF ENGINEER DATE

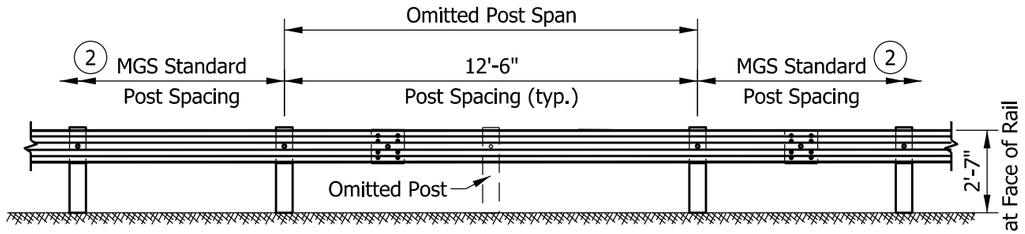

ELEVATION VIEW

MGS W-BEAM OMITTED POST

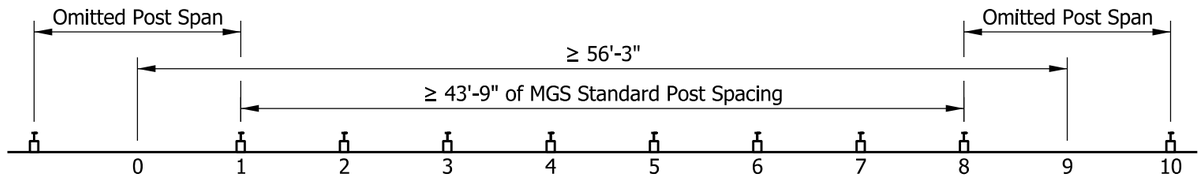

PLAN VIEW

MINIMUM DISTANCE BETWEEN OMITTED POSTS

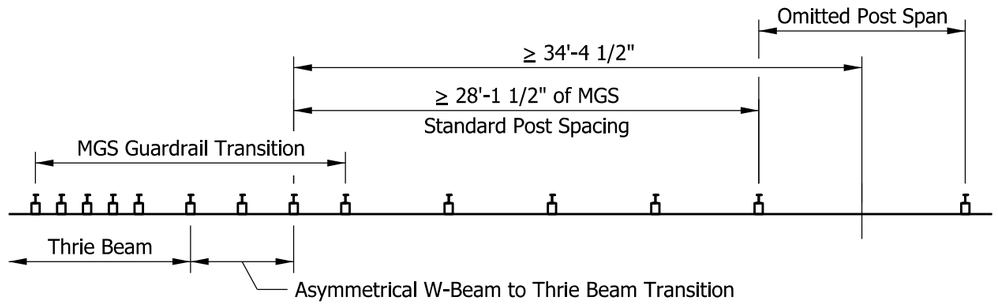

PLAN VIEW

MINIMUM DISTANCE BETWEEN OMITTED POST AND MGS GUARDRAIL TRANSITION

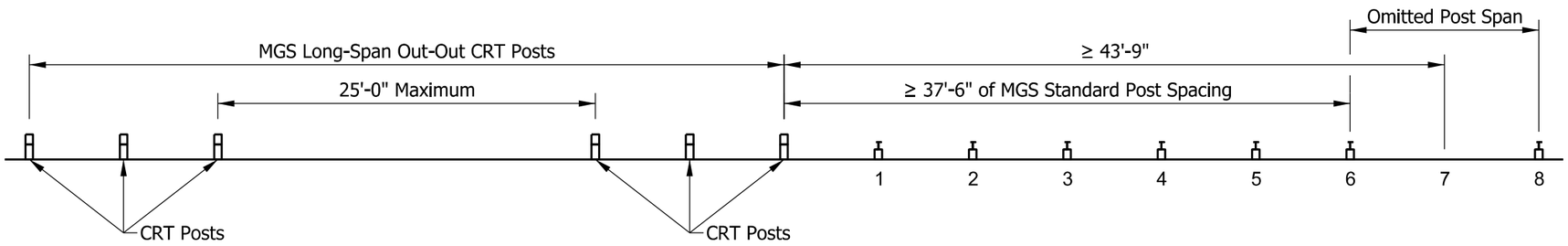

PLAN VIEW

MINIMUM DISTANCE BETWEEN OMITTED POST AND MGS LONG-SPAN OUTER CRT POST

NOTES:

1. A single post may be omitted within an MGS w-beam guardrail run.
2. Where a post is omitted, a minimum length of MGS standard post spacing guardrail shall be installed as shown.
3. An MGS w-beam guardrail run containing an omitted post shall not be installed adjacent to curb.

INDIANA DEPARTMENT OF TRANSPORTATION

MIDWEST GUARDRAIL SYSTEM
ASSEMBLY, OMITTED POST

SEPTEMBER 2018

STANDARD DRAWING NO. E 601-MGSA-06

ELIZABETH W. PHILLIPS
REGISTERED
No. 10200124
STATE OF INDIANA
PROFESSIONAL ENGINEER

/s/ Elizabeth W. Phillips 03/20/18
DESIGN STANDARDS ENGINEER DATE

/s/ John Leckie 04/25/18
CHIEF ENGINEER DATE

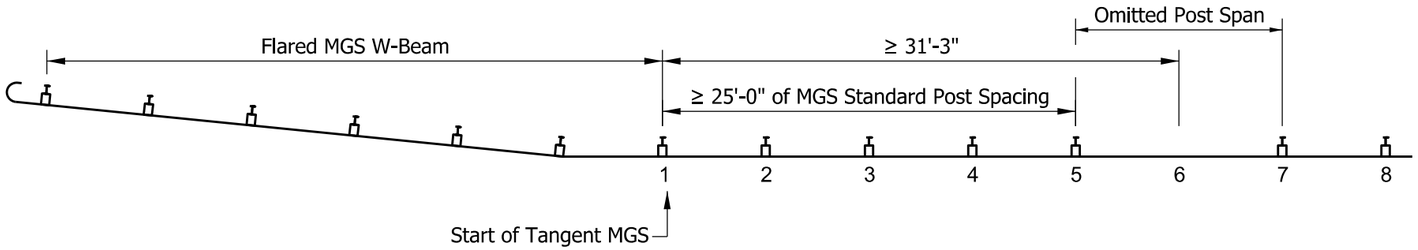

PLAN VIEW

MINIMUM DISTANCE BETWEEN OMITTED POST AND FLARED MGS W-BEAM

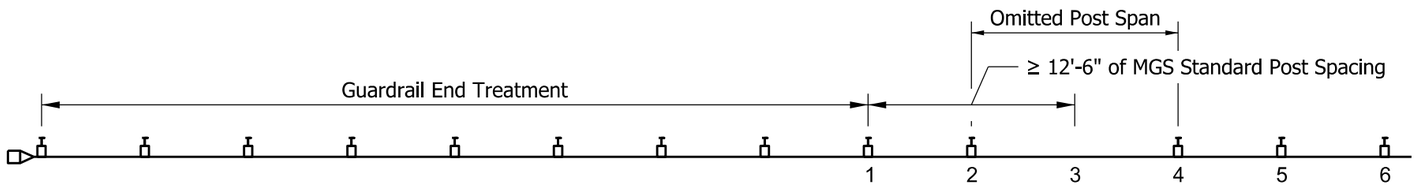

PLAN VIEW

MINIMUM DISTANCE BETWEEN OMITTED POST AND GUARDRAIL END TREATMENT

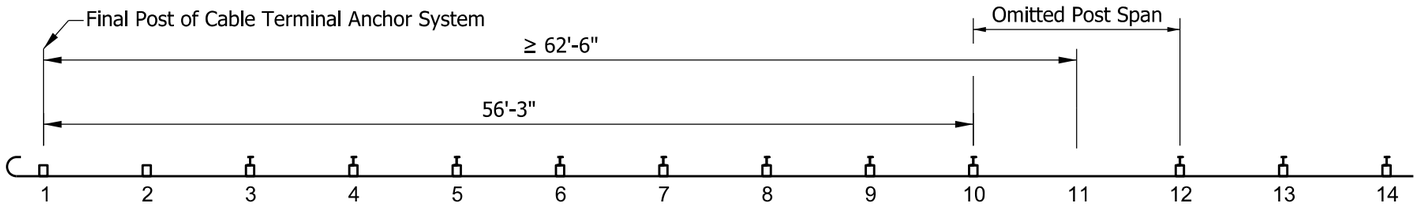

PLAN VIEW

MINIMUM DISTANCE BETWEEN OMITTED POST AND MGS CABLE TERMINAL ANCHOR SYSTEM

NOTES:

1. A single post may be omitted within an MGS w-beam guardrail run. See Standard Drawing E 601-MGSA-06
2. Where a post is omitted, a minimum length of MGS standard post spacing guardrail shall be installed as shown.
3. An MGS w-beam guardrail run containing an omitted post shall not be installed adjacent to curb.

INDIANA DEPARTMENT OF TRANSPORTATION

MIDWEST GUARDRAIL SYSTEM
ASSEMBLY, OMITTED POST

SEPTEMBER 2018

STANDARD DRAWING NO. E 601-MGSA-07

ELIZABETH W. PHILLIPS
REGISTERED
No.
10200124
STATE OF
INDIANA
PROFESSIONAL ENGINEER

/s/ Elizabeth W. Phillips 03/20/18
DESIGN STANDARDS ENGINEER DATE

/s/ John Leckie 04/25/18
CHIEF ENGINEER DATE

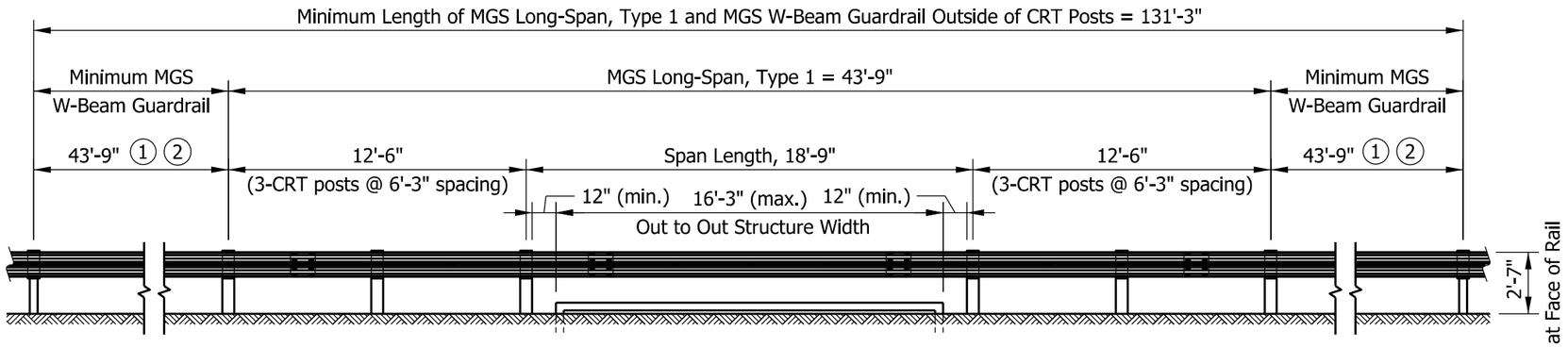

ELEVATION VIEW

INSTALLATION TYPE 1
(2 POSTS OMITTED)

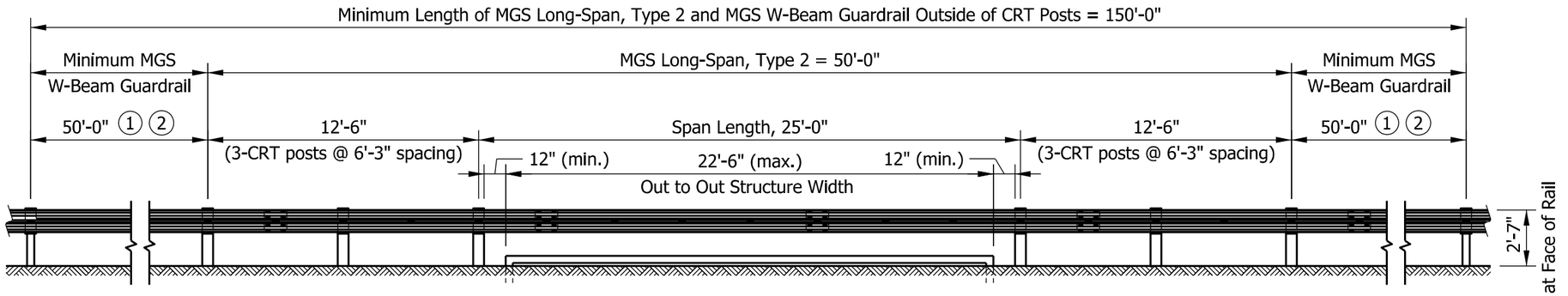

ELEVATION VIEW

INSTALLATION TYPE 2
(3 POSTS OMITTED)

NOTES:

1. A minimum length of MGS w-beam guardrail shall be installed on the approach and departure ends of the outermost CRT posts. This length may include the length of a guardrail end treatment, cable terminal anchor, or transition.

2. A minimum of 62 ft 6 in. of tangent MGS w-beam guardrail shall be installed between the outermost CRT post and the beginning of any flared guardrail section.

3. An MGS w-beam guardrail run containing MGS Long-Span shall not be installed adjacent to curb.

4. See Standard Drawing E 601-MGSA-06 for one omitted post, span length 12 ft 6 in.

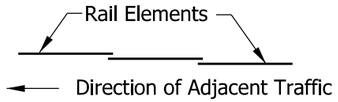

LAPPING PROCEDURE

INDIANA DEPARTMENT OF TRANSPORTATION

MIDWEST GUARDRAIL SYSTEM
ASSEMBLY, LONG-SPAN

SEPTEMBER 2018

STANDARD DRAWING NO. E 601-MGSA-08

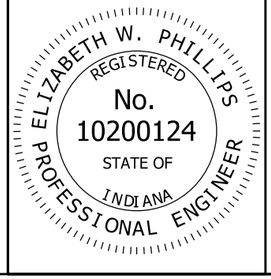

/s/ Elizabeth W. Phillips *03/20/18*
DESIGN STANDARDS ENGINEER DATE

/s/ John Leckie *04/25/18*
CHIEF ENGINEER DATE

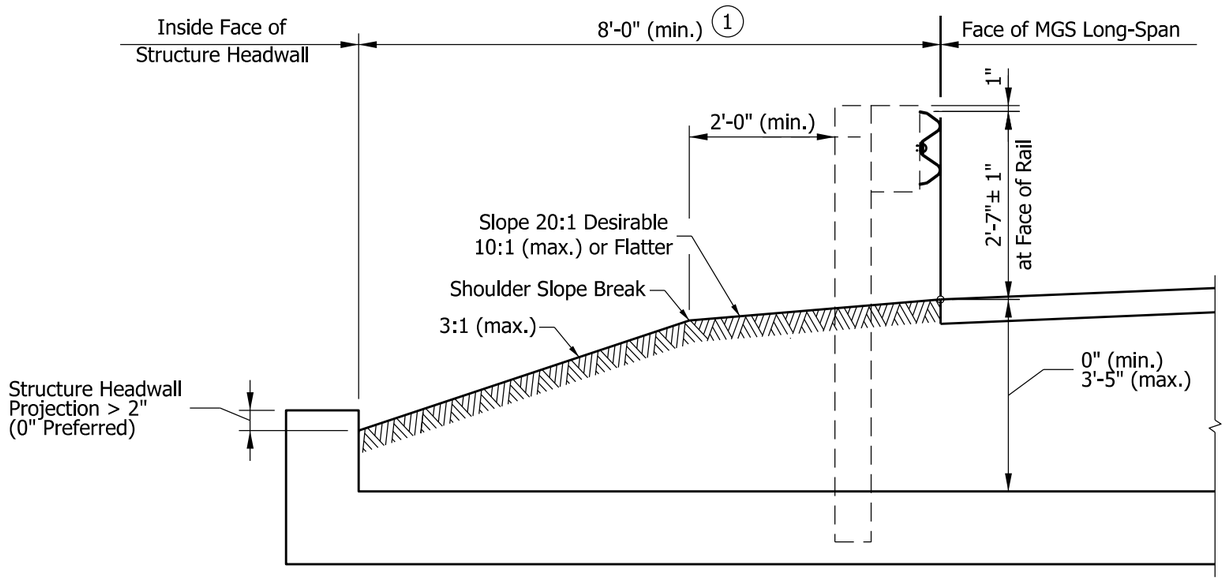

STRUCTURE HEADWALL PROJECTION > 2"

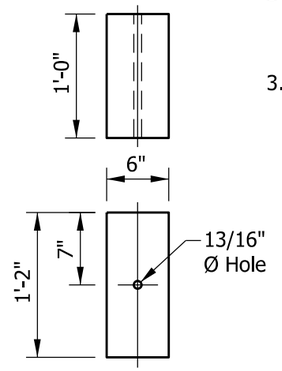

TIMBER BLOCKOUT
WITH CRT POST

NOTES:

1. Where the structure headwall projection is greater than 2 in. above the grade, the inside face of the headwall shall be a minimum of 8 ft from the face of MGS Long-Span.
2. Where the structure headwall projection is 2 in. or less above the grade, the inside face of the headwall shall be a minimum of 2 ft from the face of MGS Long-Span.
3. MGS Long-Span shall not be installed adjacent to curb.

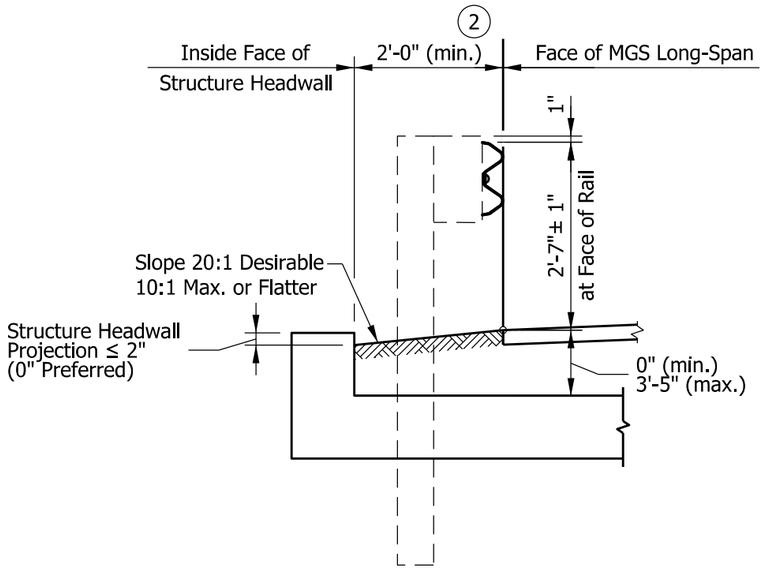

STRUCTURE HEADWALL PROJECTION ≤ 2"

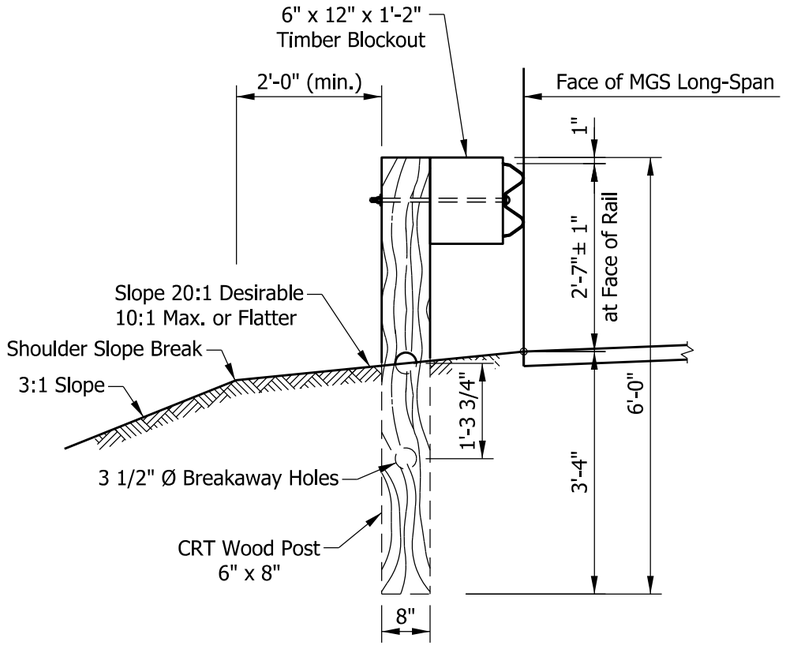

TYPICAL SECTION AT CRT POST

INDIANA DEPARTMENT OF TRANSPORTATION

MIDWEST GUARDRAIL SYSTEM
ASSEMBLY, LONG-SPAN

SEPTEMBER 2018

STANDARD DRAWING NO. E 601-MGSA-09

ELIZABETH W. PHILLIPS
REGISTERED
No. 10200124
STATE OF INDIANA
PROFESSIONAL ENGINEER

/s/ Elizabeth W. Phillips 03/20/18
DESIGN STANDARDS ENGINEER DATE

/s/ John Leckie 04/25/18
CHIEF ENGINEER DATE

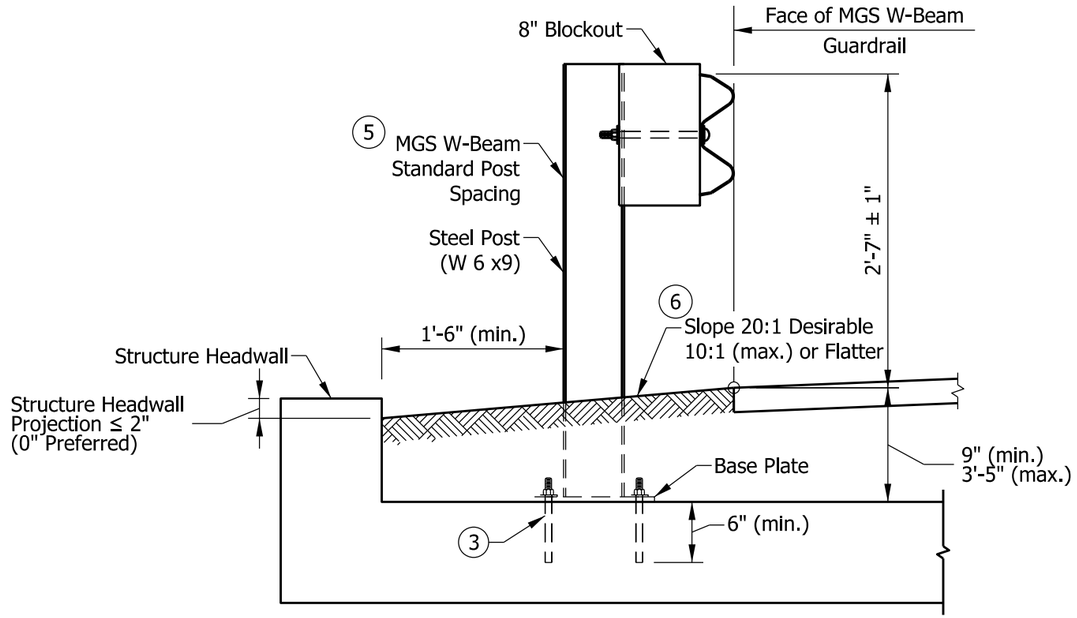

TYPICAL SECTION

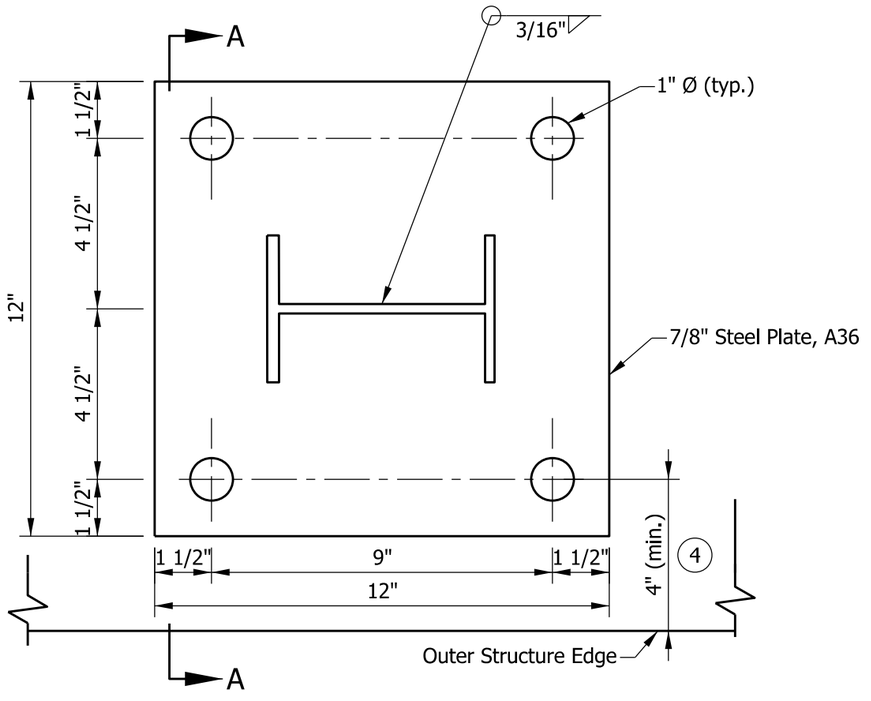

BASE PLATE AND POST

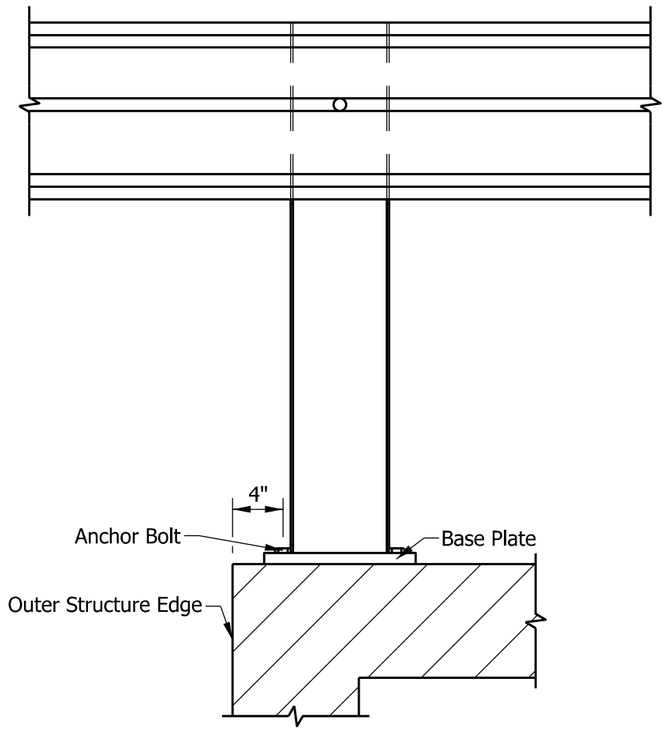

SECTION A-E

NOTES:

1. A top-mounted post shall not be installed on an arch-topped or true-arch structure.
2. Top-mounted post shall be spaced in accordance with standard MGS w-beam guardrail post spacing. See Standard Drawing E 601-MGSA-05.
3. The anchor bolt shall be 7/8 in. dia. rod, cut off to 8 1/2 in. length, with washer and nut, galvanized. The minimum embedment shall be 6 in. The anchor bolt shall be installed using Hilti RE500 Epoxy Anchoring System.
4. The center of the anchor bolt shall be installed a minimum of 4 in. from the outer structure edge.
5. The top of the post may be field cut to adjust the length. Where the post is field cut, drill holes at appropriate locations. All cut and hole surfaces shall receive a galvanized coating.
6. The post shall not be encased with asphalt, concrete, or riprap.

INDIANA DEPARTMENT OF TRANSPORTATION

MIDWEST GUARDRAIL SYSTEM ASSEMBLY, STRUCTURE TOP-MOUNTED POST

SEPTEMBER 2018

STANDARD DRAWING NO. E 601-MGSA-10

ELIZABETH W. PHILLIPS REGISTERED No. 10200124 STATE OF INDIANA PROFESSIONAL ENGINEER

/s/ Elizabeth W. Phillips 03/20/18
DESIGN STANDARDS ENGINEER DATE

/s/ John Leckie 04/25/18
CHIEF ENGINEER DATE

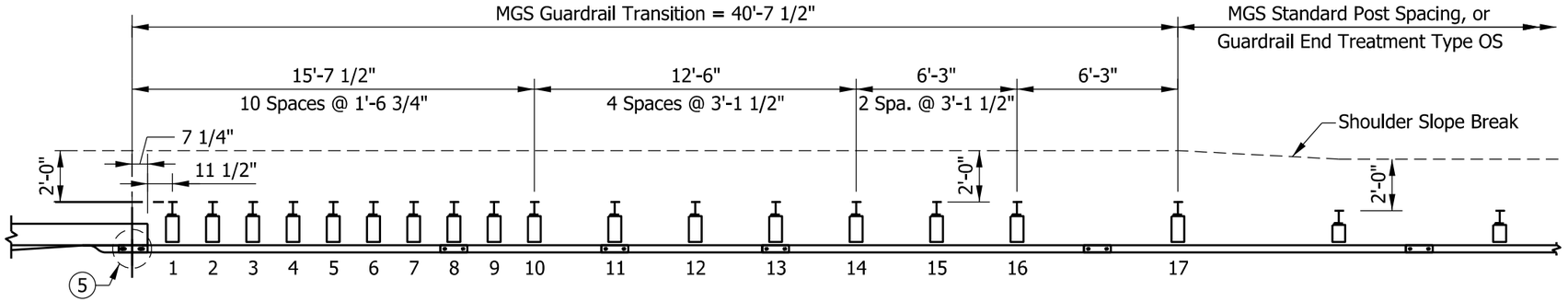

PLAN VIEW

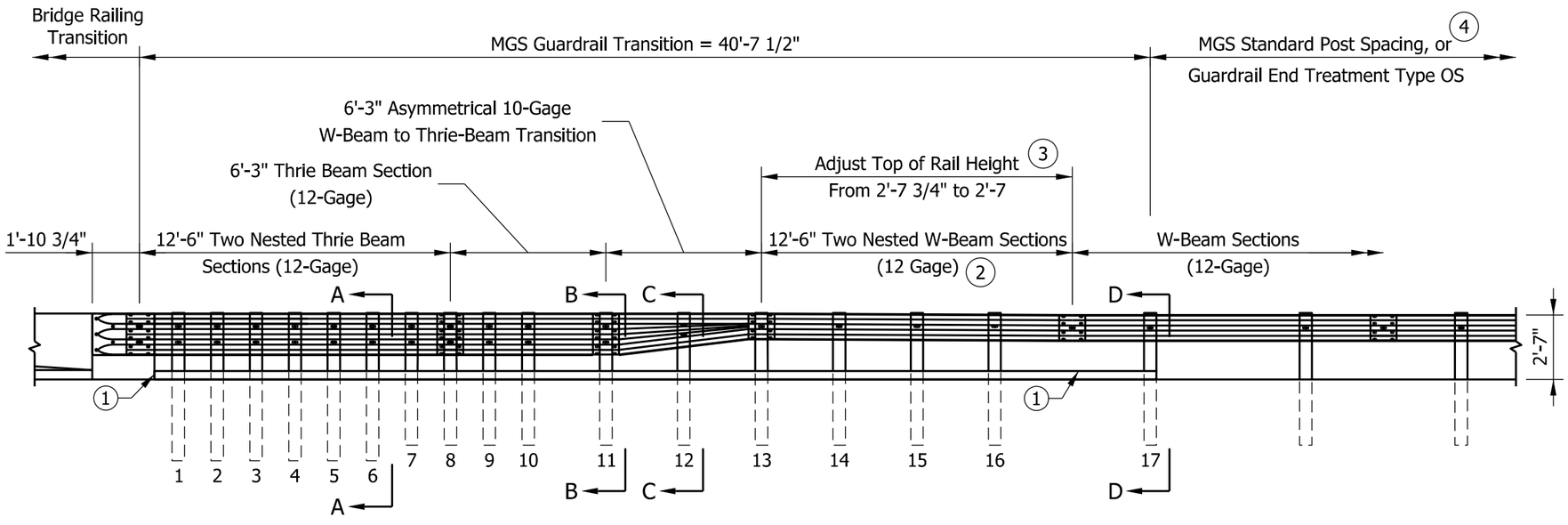

ELEVATION VIEW

MGS GUARDRAIL TRANSITION

NOTES:

1. Optional 4 in. sloping curb only. See Standard Drawing E 605-CCCG-01 or 605-CCIN-01. Where curb is present it shall extend the length of the transition to post 17. The face of curb shall not project beyond the face of w-beam or thrie-beam guardrail.
2. Where curb is not present, a single w-beam section may be installed instead of a nested section. See Standard Drawing E 601-MGSA-12 for guardrail transition without curb.
3. Guardrail mounting height at bridge railing transition shall be 2 ft 7 3/4 in. Adjust guardrail mounting height down to 2 ft 7 in.
4. A minimum of 12 ft 6 in. of tangent MGS w-beam guardrail shall be installed beyond the MGS guardrail transition limits and the beginning of any flared guardrail section.
5. See Standard Drawing E 601-MGSA-13 for lap detail.
6. See Standard Drawing Series E 601-TBGC for Thrie-Beam Guardrail Components.
7. See Standard Drawing E 601-MGSA-14 through -15 for post and blockout details and section views.
8. See Standard Drawing E 706-CBRT-04 for bridge railing attachment details.

INDIANA DEPARTMENT OF TRANSPORTATION

MIDWEST GUARDRAIL SYSTEM ASSEMBLY, GUARDRAIL TRANSITION WITH CURB

SEPTEMBER 2018

STANDARD DRAWING NO. E 601-MGSA-11

ELIZABETH W. PHILLIPS REGISTERED No. 10200124 STATE OF INDIANA PROFESSIONAL ENGINEER

/s/ Elizabeth W. Phillips 03/20/18
DESIGN STANDARDS ENGINEER DATE

/s/ John Leckie 04/25/18
CHIEF ENGINEER DATE

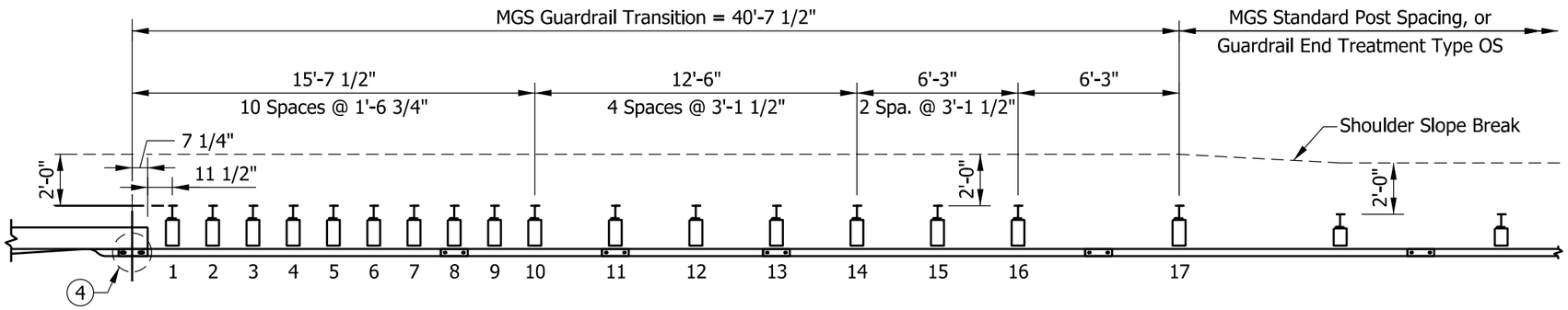

PLAN VIEW

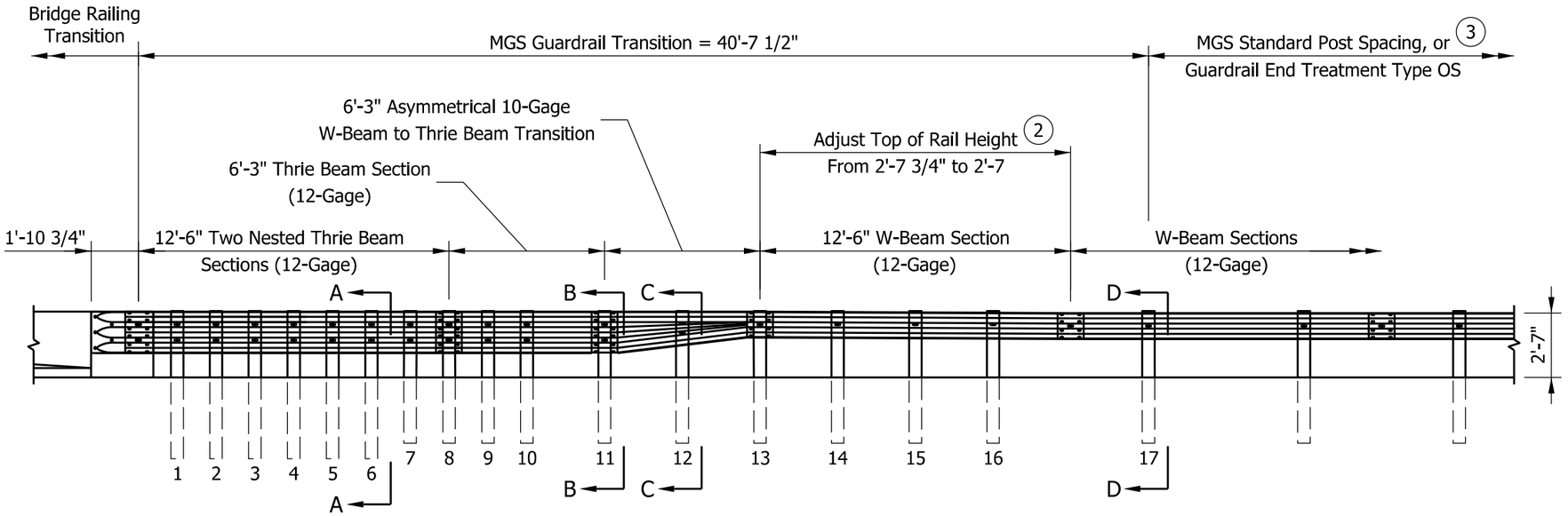

ELEVATION VIEW

MGS GUARDRAIL TRANSITION

NOTES:

1. Where a curb is present, details on Standard Drawing E 601-MGSA-11 guardrail transition with curb shall apply.
2. Guardrail mounting height at bridge railing transition is 2 ft 7 3/4 in. Adjust guardrail mounting height down to 2 ft 7 in.
3. A minimum of 12 ft 6 in. of tangent MGS w-beam guardrail shall be installed beyond the MGS guardrail transition limits and the beginning of any flared guardrail section.
4. See Standard Drawing E 601-MGSA-13 for lap detail.
5. See Standard Drawing Series E 601-TBGC for Thrie-Beam Guardrail Components.
6. See Standard Drawing E 601-MGSA-14 through -15 for post and blockout details and section views.
7. See Standard Drawing E 706-CBRT-04 for bridge railing attachment details.

INDIANA DEPARTMENT OF TRANSPORTATION

MIDWEST GUARDRAIL SYSTEM ASSEMBLY,
GUARDRAIL TRANSITION WITHOUT CURB

SEPTEMBER 2018

STANDARD DRAWING NO. E 601-MGSA-12

ELIZABETH W. PHILLIPS
REGISTERED
No. 10200124
STATE OF INDIANA
PROFESSIONAL ENGINEER

/s/ Elizabeth W. Phillips 03/20/18
DESIGN STANDARDS ENGINEER DATE

/s/ John Leckie 04/25/18
CHIEF ENGINEER DATE

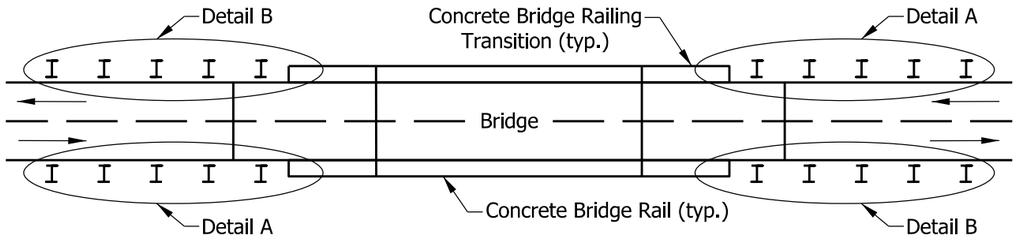

GUARDRAIL TRANSITION PLAN VIEW

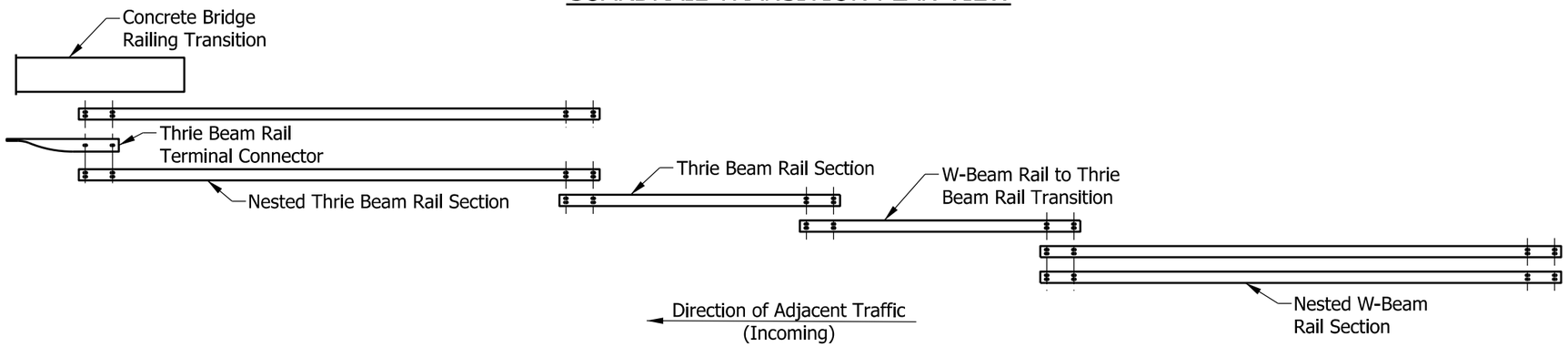

DETAIL A

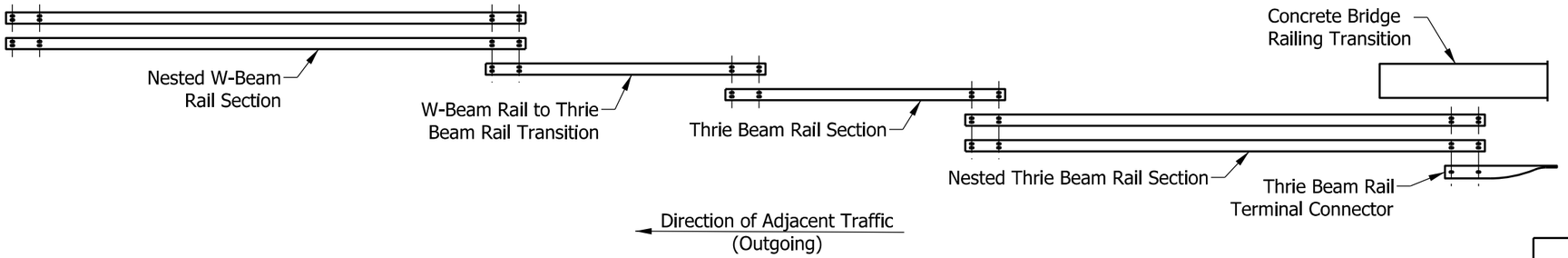

DETAIL B

LAP DETAILS AT BRIDGE RAILING TRANSITION PLAN VIEW

INDIANA DEPARTMENT OF TRANSPORTATION

MIDWEST GUARDRAIL SYSTEM
ASSEMBLY, GUARDRAIL TRANSITION

SEPTEMBER 2018

STANDARD DRAWING NO. E 601-MGSA-13

ELIZABETH W. PHILLIPS
REGISTERED
No. 10200124
STATE OF INDIANA
PROFESSIONAL ENGINEER

/s/ Elizabeth W. Phillips 03/20/18
DESIGN STANDARDS ENGINEER DATE

/s/ John Leckie 04/25/18
CHIEF ENGINEER DATE

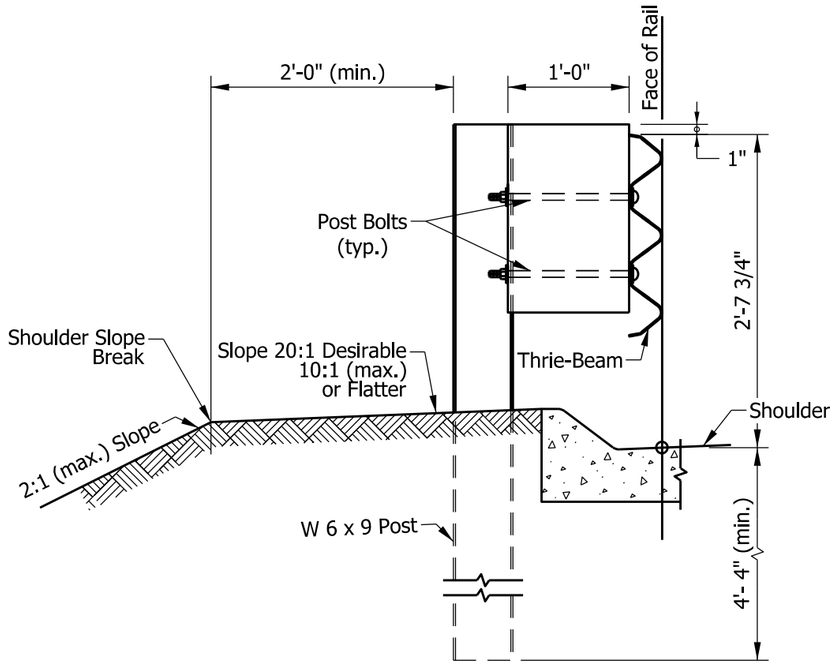

SECTION A-A

POSTS 1-6

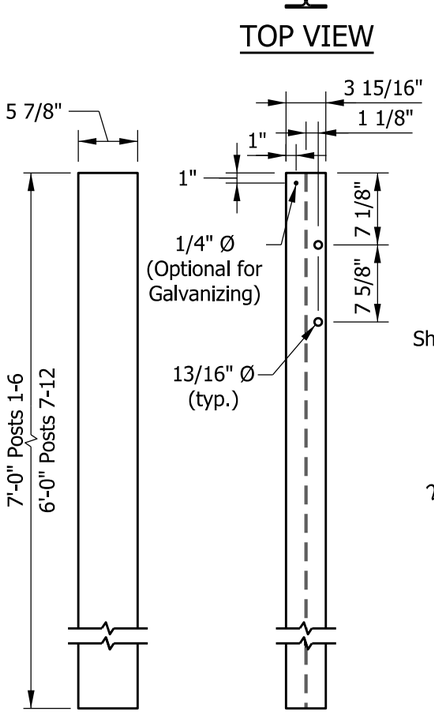

SIDE VIEW FRONT VIEW

W 6 x 9 POST DETAILS (2)

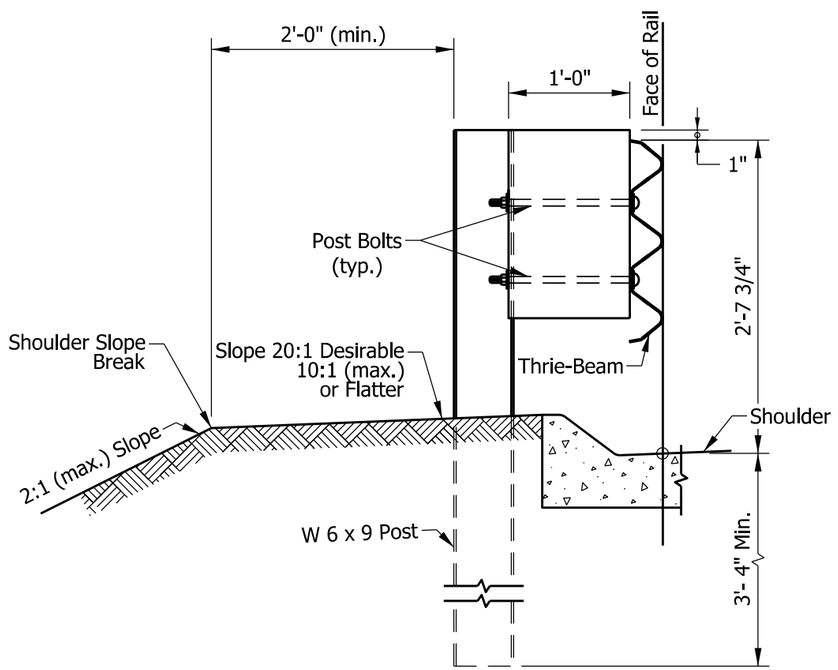

SECTION B-B

POSTS 7-11

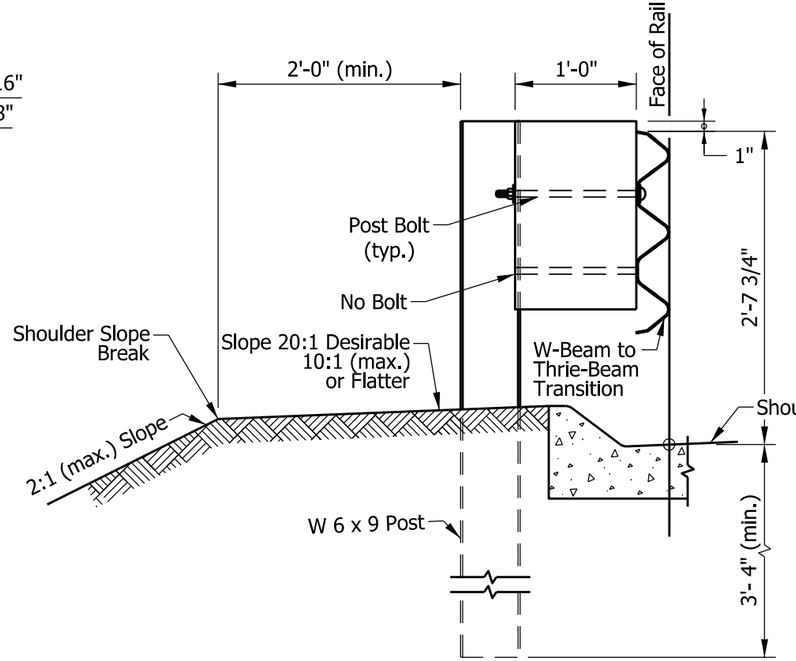

SECTION C-C

POST 12

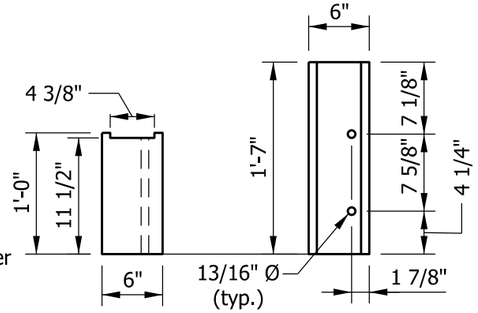

TOP VIEW FRONT VIEW

BLOCKOUT POSTS 1-12
(TIMBER)

NOTES:

1. All holes drilled or punched to 13/16 in. dia.
2. Timber posts shall not be used within the limits of the MGS guardrail transition.
3. Hole pattern for post numbers 1 through 12 may be drilled in back flange.
4. See Standard Drawing E 601-MGSA-11 or -12 for post numbers and sections.

INDIANA DEPARTMENT OF TRANSPORTATION

MIDWEST GUARDRAIL SYSTEM
ASSEMBLY, GUARDRAIL TRANSITION

SEPTEMBER 2018

STANDARD DRAWING NO. E601-MGSA-14

ELIZABETH W. PHILLIPS
REGISTERED
No. 10200124
STATE OF INDIANA
PROFESSIONAL ENGINEER

/s/ Elizabeth W. Phillips 03/20/18
DESIGN STANDARDS ENGINEER DATE

/s/ John Leckie 04/25/18
CHIEF ENGINEER DATE

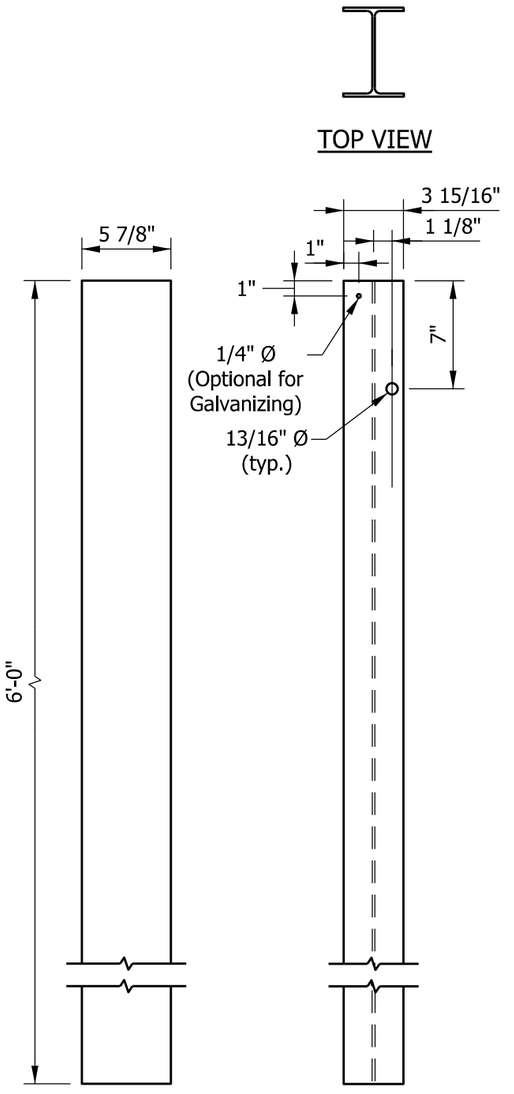

POSTS 13-17 (2)

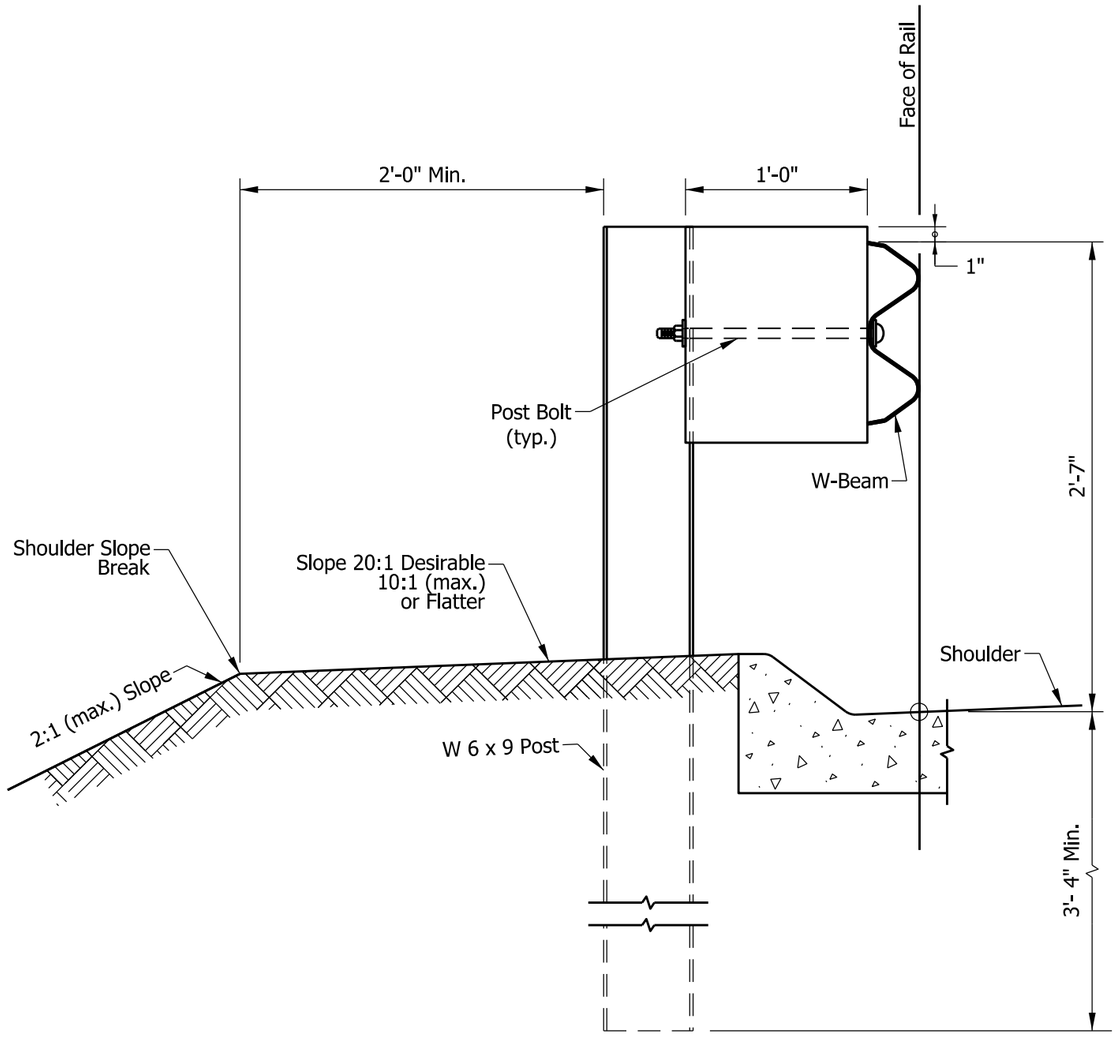

SECTION D-D

POSTS 13-17

NOTES:

1. All holes drilled or punched to 13/16 in. dia.
2. Timber posts shall not be used within the limits of the MGS guardrail transition.
3. Hole pattern for post numbers 13 through 17 may be drilled in back flange.
4. See Standard Drawing E 601-MGSA-11 or -12 for post numbers and sections.

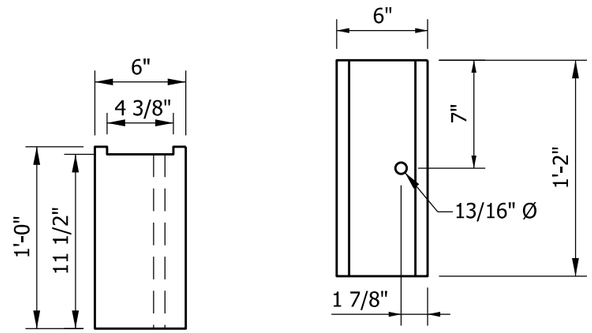

TOP VIEW FRONT VIEW

BLOCKOUT POSTS 13-17
(TIMBER)

INDIANA DEPARTMENT OF TRANSPORTATION

MIDWEST GUARDRAIL SYSTEM
ASSEMBLY, GUARDRAIL TRANSITION

SEPTEMBER 2018

STANDARD DRAWING NO. E 601-MGSA-15

ELIZABETH W. PHILLIPS
REGISTERED
No. 10200124
STATE OF INDIANA
PROFESSIONAL ENGINEER

/s/ Elizabeth W. Phillips 03/20/18
DESIGN STANDARDS ENGINEER DATE

/s/ John Leckie 04/25/18
CHIEF ENGINEER DATE

NOTES:

1. Where rub-rail is present on existing w-beam guardrail, the channel shall be cut and repositioned behind the flange.

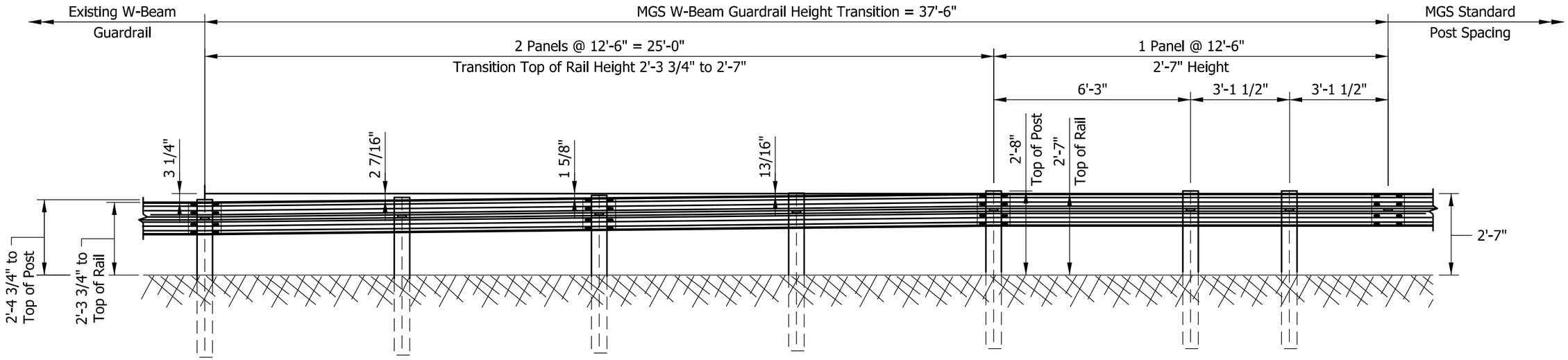

ELEVATION VIEW

INDIANA DEPARTMENT OF TRANSPORTATION	
MIDWEST GUARDRAIL ASSEMBLY, HEIGHT TRANSITION SEPTEMBER 2018	
STANDARD DRAWING NO. E 601-MGSA-16	
ELIZABETH W. PHILLIPS REGISTERED No. 10200124 STATE OF INDIANA PROFESSIONAL ENGINEER	*/s/ Elizabeth W. Phillips* 03/20/18 DESIGN STANDARDS ENGINEER DATE */s/ John Leckie* 04/25/18 CHIEF ENGINEER DATE

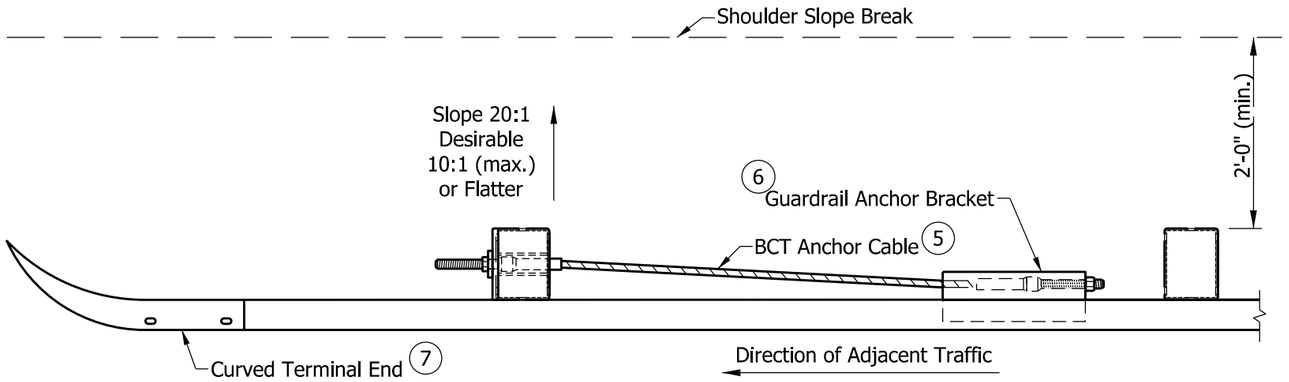

PLAN VIEW

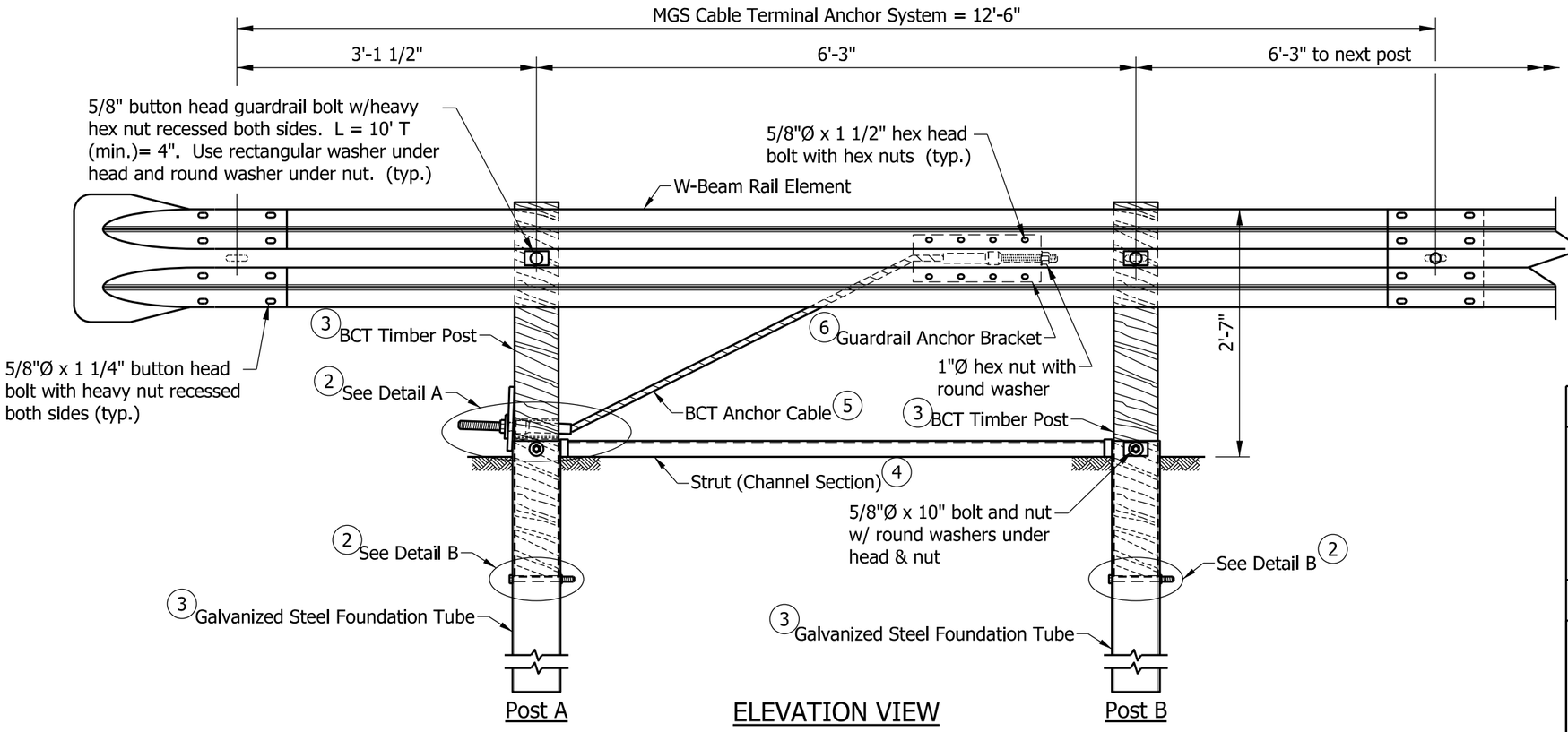

ELEVATION VIEW

NOTES:

1. The MGS cable terminal anchor system shall only be used at the outgoing end of an MGS w-beam guardrail run not exposed to oncoming traffic.

(2) See Standard Drawing E 601-MGSA-18 for Details A and B.

(3) See Standard Drawing E 601-MGSA-19 for BCT timber post and steel foundation tube details.

(4) See Standard Drawing E 601-MGSA-20 for strut details.

(5) See Standard Drawing E 601-MGSA-21 for BCT anchor cable assembly details.

(6) See Standard Drawing E 601-MGSA-22 for guardrail anchor bracket details.

(7) See Standard Drawing E 601-WBGC-01 for curved terminal end details.

INDIANA DEPARTMENT OF TRANSPORTATION

MIDWEST GUARDRAIL SYSTEM
ASSEMBLY, CABLE TERMINAL ANCHOR SYSTEM

SEPTEMBER 2018

STANDARD DRAWING NO. E 601-MGSA-17

ELIZABETH W. PHILLIPS
REGISTERED
No. 10200124
STATE OF INDIANA
PROFESSIONAL ENGINEER

/s/ Elizabeth W. Phillips 03/20/18
DESIGN STANDARDS ENGINEER DATE

/s/ John Leckie 04/25/18
CHIEF ENGINEER DATE

NOTES:

1. See Standard Drawing E 601-MGSA-21 for BCT post sleeve and BCT bearing plate details.
2. See Standard Drawing E 601-MGSA-21 for BCT anchor cable assembly details.

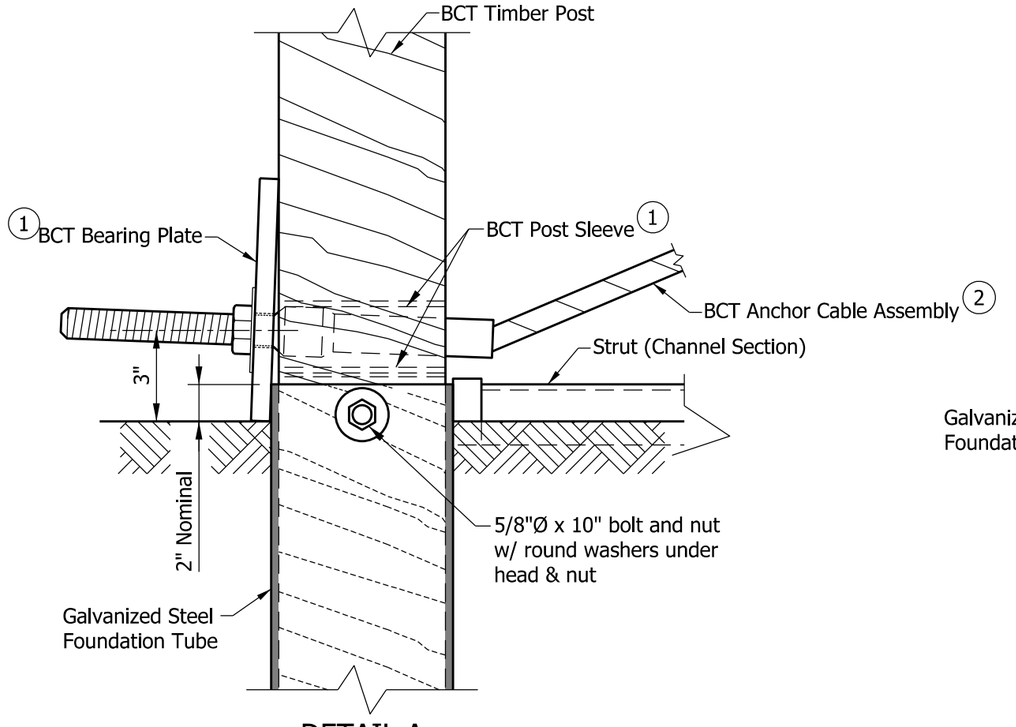

DETAIL A

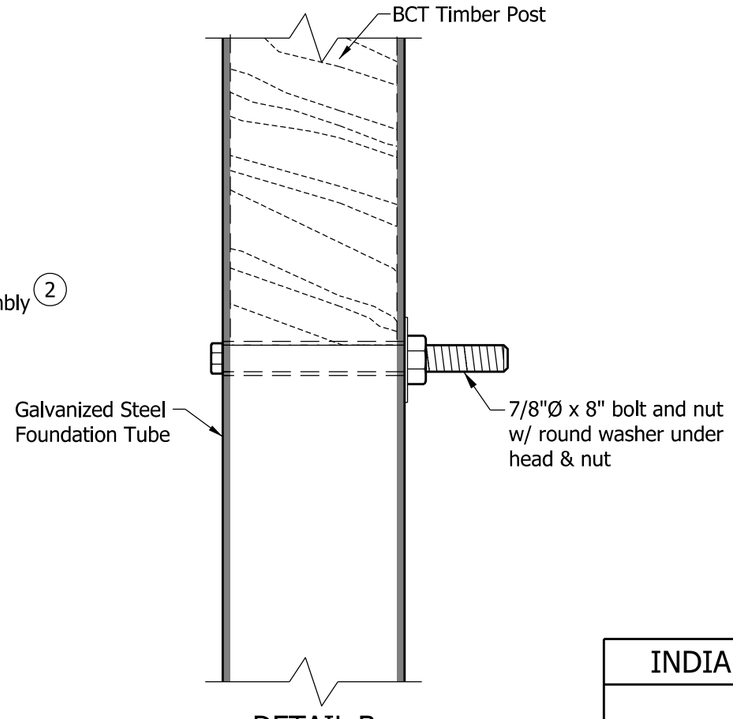

DETAIL B

INDIANA DEPARTMENT OF TRANSPORTATION

MIDWEST GUARDRAIL SYSTEM ASSEMBLY,
CABLE TERMINAL ANCHOR SYSTEM

SEPTEMBER 2018

STANDARD DRAWING NO. E 601-MGSA-18

ELIZABETH W. PHILLIPS
REGISTERED
No. 10200124
STATE OF INDIANA
PROFESSIONAL ENGINEER

/s/ Elizabeth W. Phillips 03/20/18
DESIGN STANDARDS ENGINEER DATE

/s/ John Leckie 04/25/18
CHIEF ENGINEER DATE

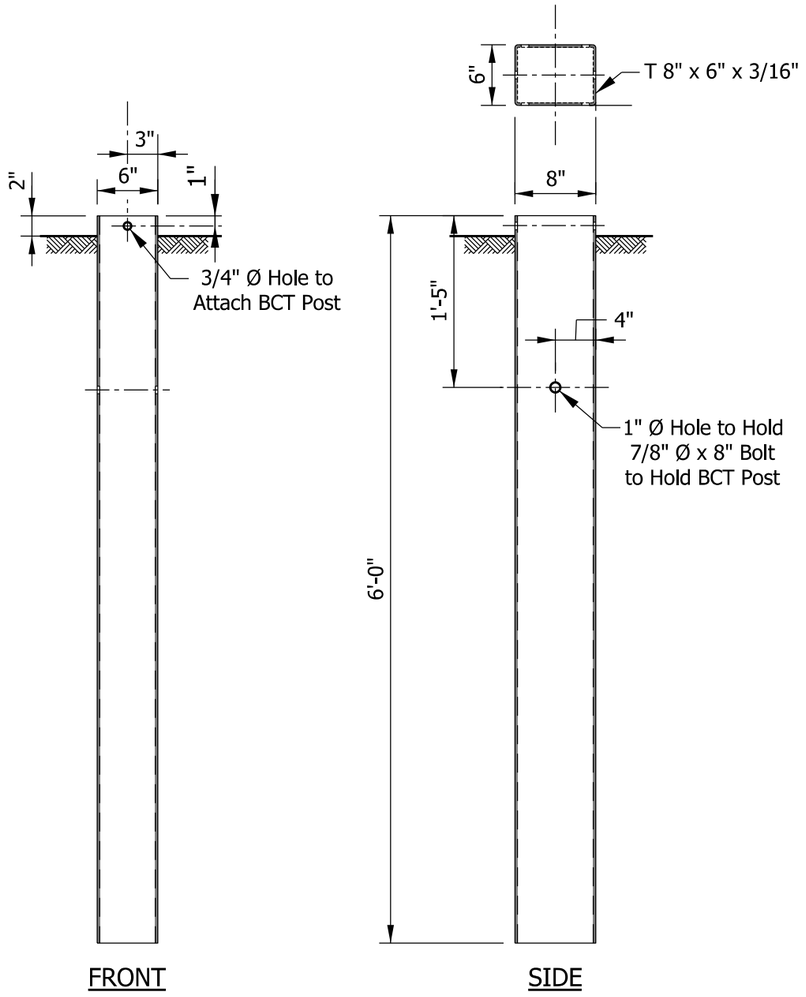

GALVANIZED STEEL
FOUNDATION TUBE

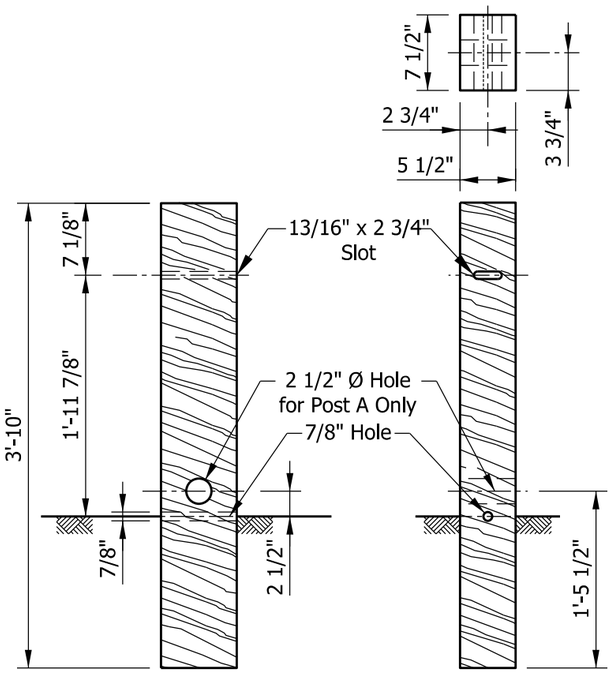

BCT TIMBER POST

INDIANA DEPARTMENT OF TRANSPORTATION	
MIDWEST GUARDRAIL SYSTEM ASSEMBLY, CABLE TERMINAL ANCHOR SYSTEM SEPTEMBER 2018	
STANDARD DRAWING NO. E 601-MGSA-19	

ELIZABETH W. PHILLIPS
REGISTERED
No. 10200124
STATE OF INDIANA
PROFESSIONAL ENGINEER

/s/ Elizabeth W. Phillips 03/20/18
DESIGN STANDARDS ENGINEER DATE

/s/ John Leckie 04/25/18
CHIEF ENGINEER DATE

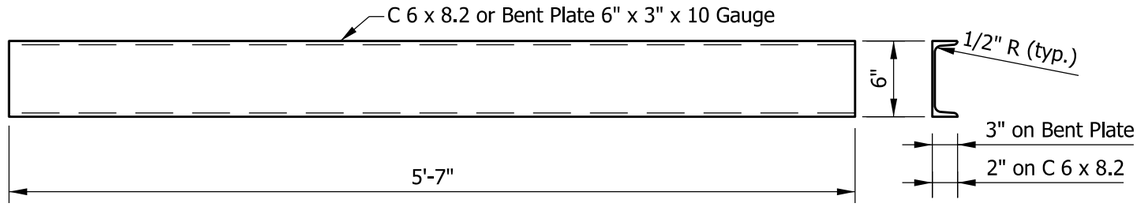

STRUT DETAILS

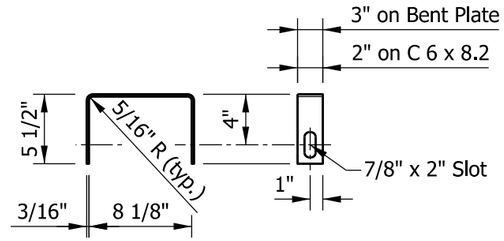

YOKE DETAILS
(2 Required)

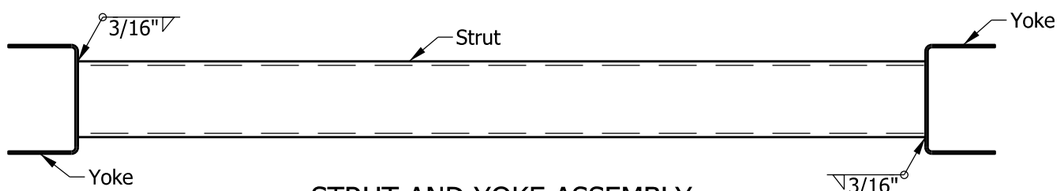

STRUT AND YOKE ASSEMBLY

INDIANA DEPARTMENT OF TRANSPORTATION

MIDWEST GUARDRAIL ASSEMBLY,
CABLE TERMINAL ANCHOR SYSTEM

SEPTEMBER 2018

STANDARD DRAWING NO. E 601-MGSA-20

ELIZABETH W. PHILLIPS
REGISTERED
No.
10200124
STATE OF
INDIANA
PROFESSIONAL ENGINEER

/s/ Elizabeth W. Phillips 03/20/18
DESIGN STANDARDS ENGINEER DATE

/s/ John Leckie 04/25/18
CHIEF ENGINEER DATE

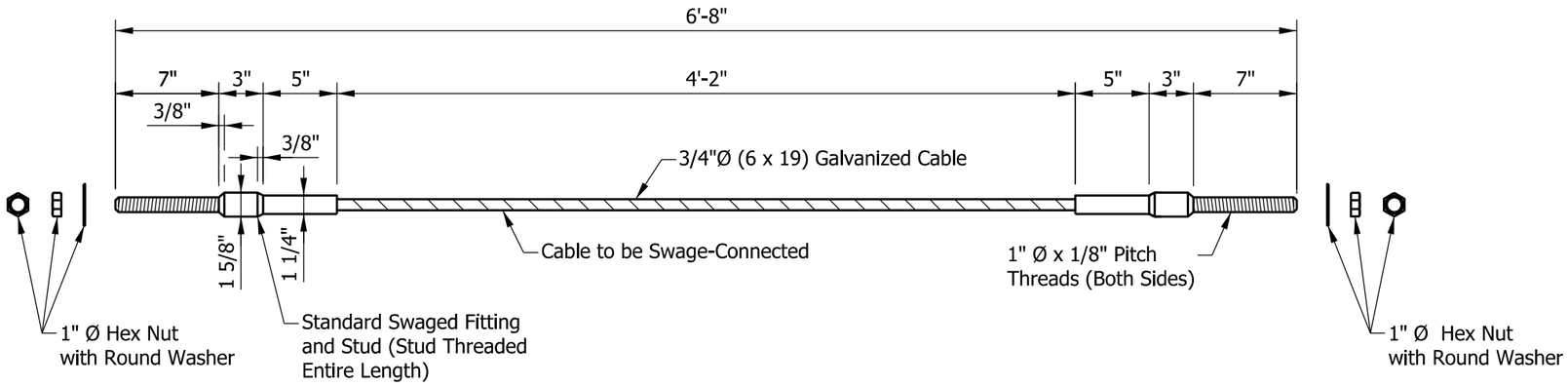

BCT ANCHOR CABLE ASSEMBLY

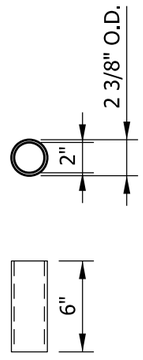

BCT POST SLEEVE

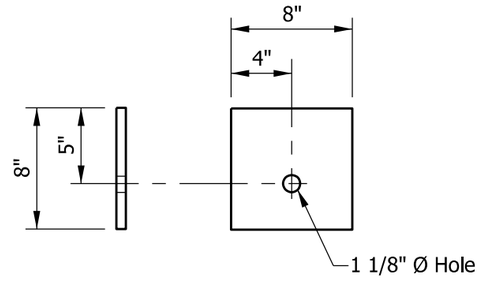

BCT BEARING PLATE

INDIANA DEPARTMENT OF TRANSPORTATION

MIDWEST GUARDRAIL SYSTEM ASSEMBLY,
CABLE TERMINAL ANCHOR SYSTEM

SEPTEMBER 2018

STANDARD DRAWING NO. E601-MGSA-21

ELIZABETH W. PHILLIPS
REGISTERED
No.
10200124
STATE OF
INDIANA
PROFESSIONAL ENGINEER

/s/ Elizabeth W. Phillips 03/20/18
DESIGN STANDARDS ENGINEER DATE

/s/ John Leckie 04/25/18
CHIEF ENGINEER DATE

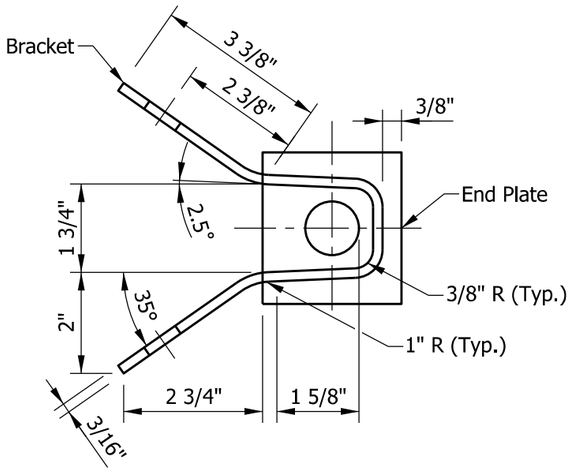

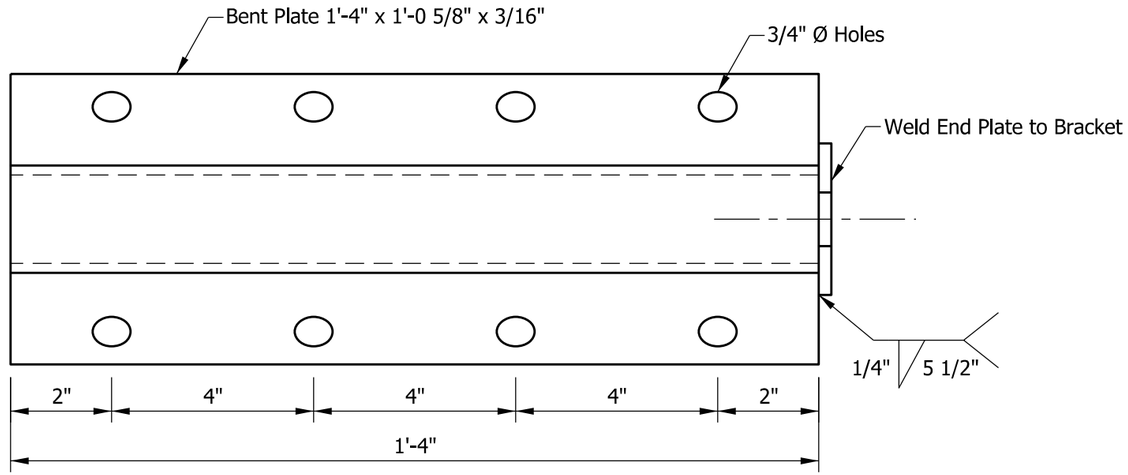

BRACKET

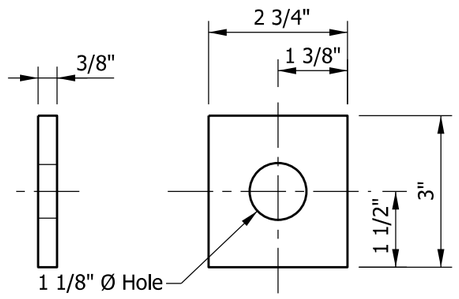

END PLATE

GUARDRAIL ANCHOR BRACKET

INDIANA DEPARTMENT OF TRANSPORTATION

MIDWEST GUARDRAIL SYSTEM ASSEMBLY,
CABLE TERMINAL ANCHOR SYSTEM

SEPTEMBER 2018

STANDARD DRAWING NO. E 601-MGSA-22

ELIZABETH W. PHILLIPS
REGISTERED
No.
10200124
STATE OF
INDIANA
PROFESSIONAL ENGINEER

/s/ Elizabeth W. Phillips 03/20/18
DESIGN STANDARDS ENGINEER DATE

/s/ John Leckie 04/25/18
CHIEF ENGINEER DATE

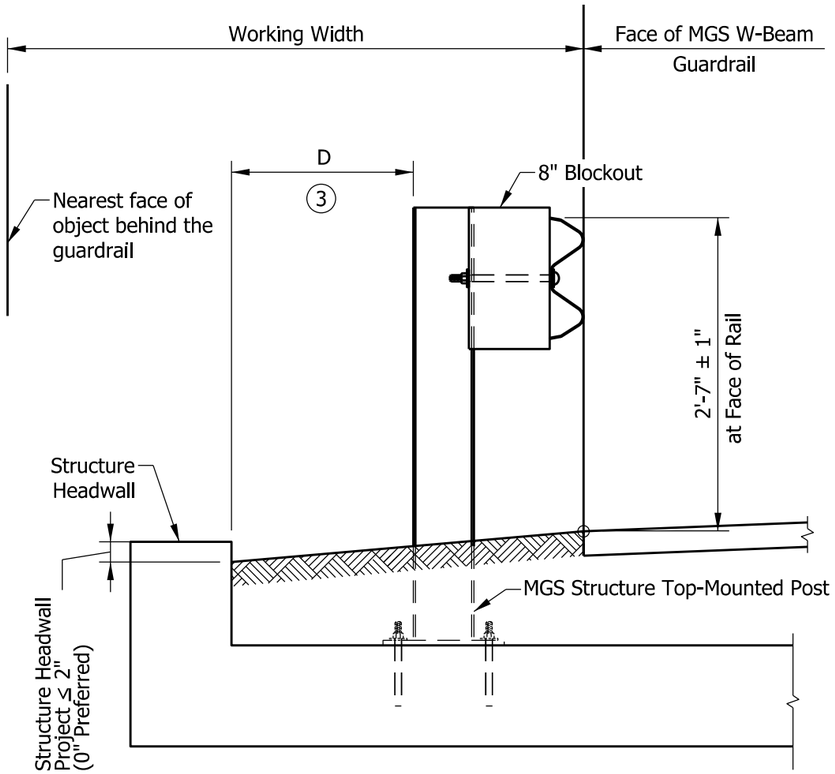

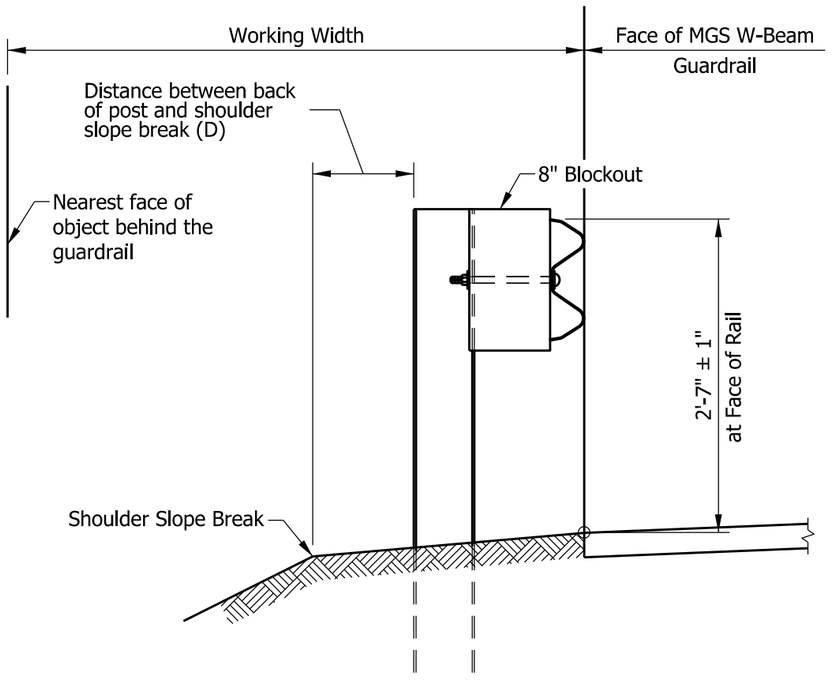

Guardrail Type	Post Spacing	D	Working Width
MGS W-Beam Standard	6'-3"	2 ft	5.0 ft
MGS W-Beam Standard w/Omitted Post	6'-3"	2 ft	5.0 ft
MGS W-Beam Standard	6'-3"	< 2 ft	6.5 ft
MGS W-Beam Half Post Spacing	3'-1 1/2"	2 ft	4.5 ft
MGS W-Beam Quarter Post Spacing	1'-6 3/4"	2 ft	4.0 ft
MGS Long-Span	Varies	(4)	8.0 ft
MGS Structure Top-Mount Post	6'-3"	1.5 ft (3)	4.2 ft

NOTES:

1. Guardrail placement shall consider working width.
2. Working width assumes an 8-in. blockout. Where a deeper blockout is used, the working width shall be adjusted to include the additional depth.

(3) Distance between the back of post and inside face of structure headwall.

(4) See Standard Drawing E 601-MGSA-09 for the distance between front face of MSG Long-Span and inside face of structure headwall.

INDIANA DEPARTMENT OF TRANSPORTATION

MIDWEST GUARDRAIL SYSTEM ASSEMBLY, WORKING WIDTH

SEPTEMBER 2018

STANDARD DRAWING NO. E 601-MGSA-23

ELIZABETH W. PHILLIPS
REGISTERED
No. 10200124
STATE OF INDIANA
PROFESSIONAL ENGINEER

/s/ Elizabeth W. Phillips 03/20/18
DESIGN STANDARDS ENGINEER DATE

/s/ John Leckie 04/25/18
CHIEF ENGINEER DATE

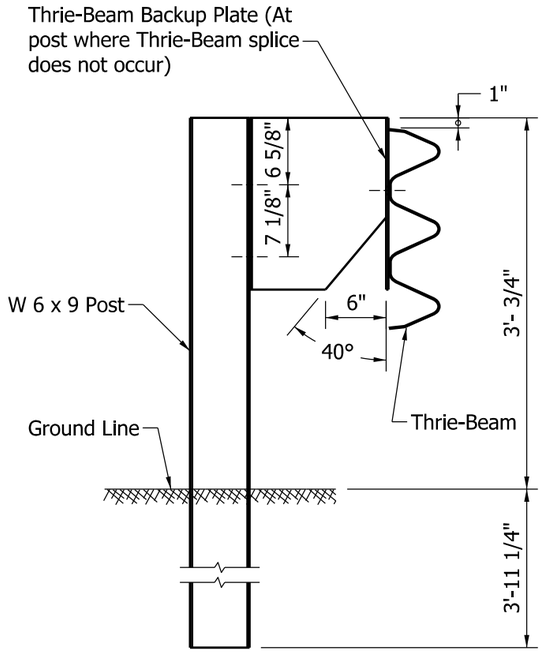

THRIE BEAM GUARDRAIL

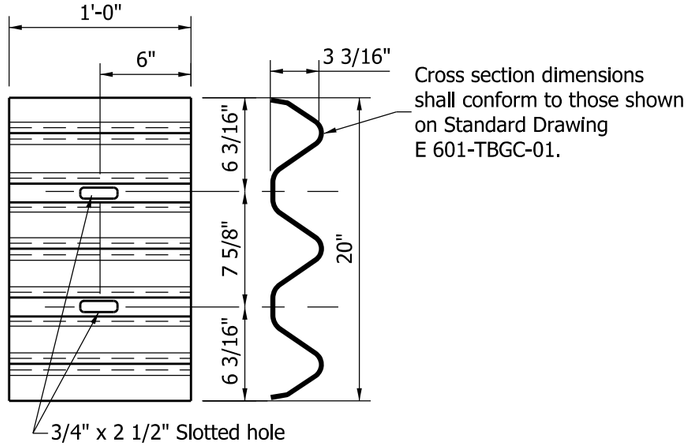

THRIE BEAM GUARDRAIL BACK-UP PLATE AT LOCATIONS WITHOUT SPLICE

NOTES:

1. See Standard Drawing E 601-TBGC-01 for Thrie Beam rail section details.
2. See Standard Drawing E 601-TTGB-04 for W 6 x 9 post hole pattern details.
3. Typical post spacing for Thrie Beam Guardrail and Double Faced Thrie Beam Guardrail is 6'-3".
4. Only the blockout material shown may be used.
5. All blockout holes drilled or punched to 3/4" diameter.

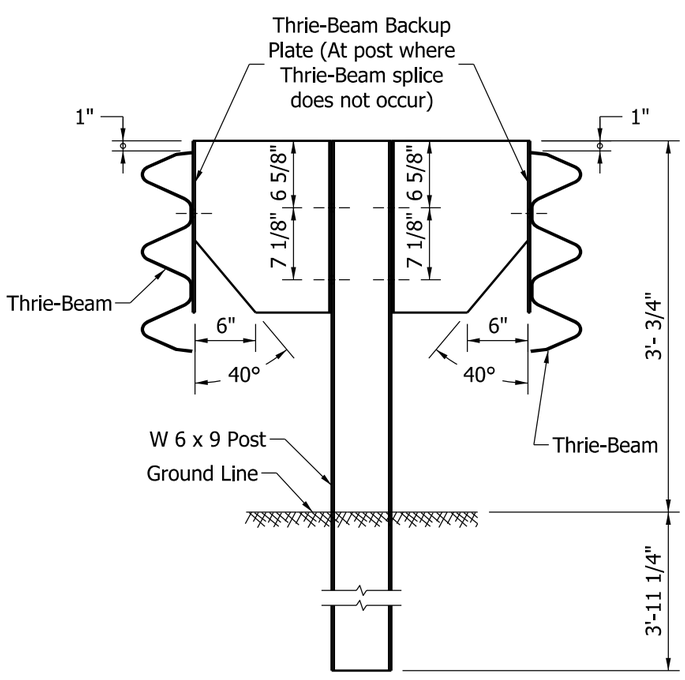

DOUBLE FACED THRIE BEAM GUARDRAIL

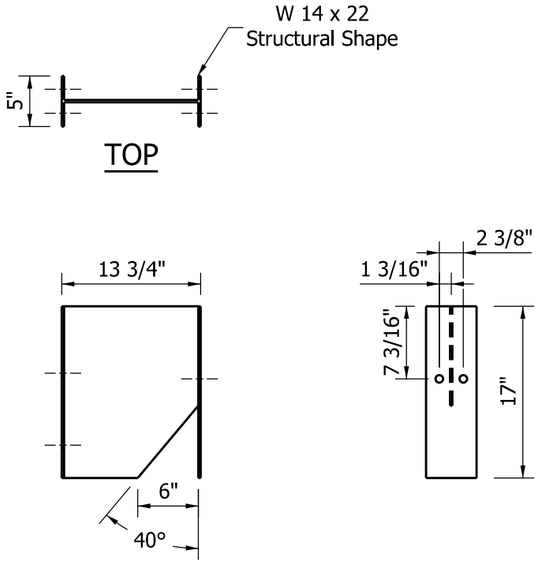

THRIE BEAM GUARDRAIL BLOCKOUT
(STEEL ONLY)

INDIANA DEPARTMENT OF TRANSPORTATION

THRIE BEAM
GUARDRAIL DETAILS

SEPTEMBER 2011

STANDARD DRAWING NO. E 601-MTGR-01

RICHARD L. VanCLEAVE
REGISTERED
No. 9750
STATE OF INDIANA
PROFESSIONAL ENGINEER

DESIGN STANDARDS ENGINEER

/s/ Richard l. VanCleave 09/01/11
DESIGN STANDARDS ENGINEER DATE

/s/ Mark A. Miller 09/01/11
CHIEF HIGHWAY ENGINEER DATE

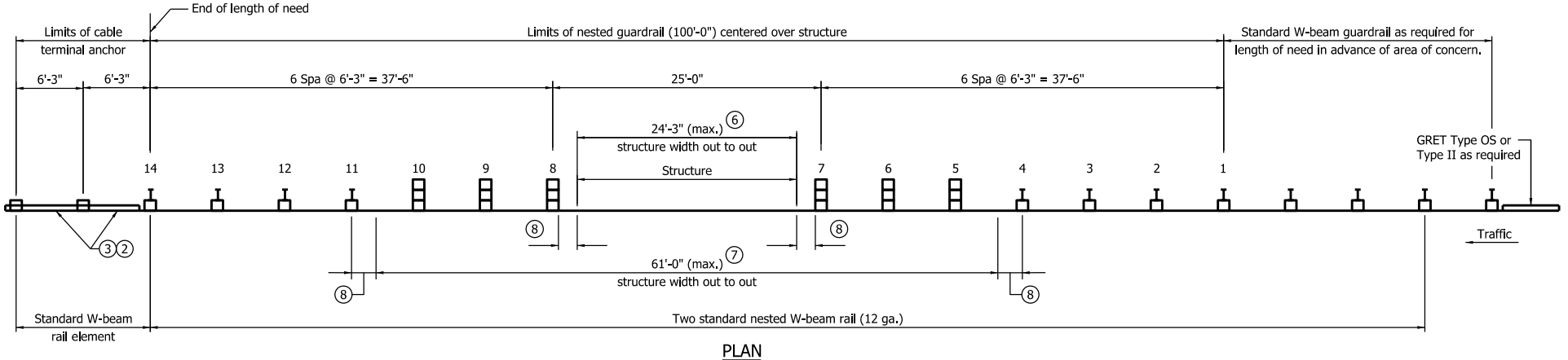

PLAN

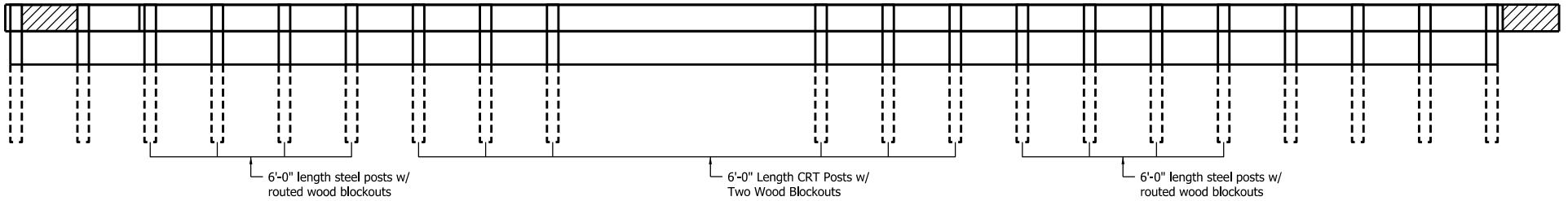

ELEVATION

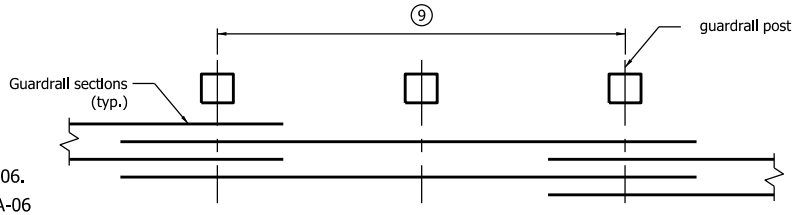

LAP DETAIL FOR NESTED W-BEAM RAILING SECTION

NOTES:

(2) For two-lane two-way operation, use GRET type OS. For structure width > 24'-3", provide three additional spans of standard W-beam guardrail at 6'-3" each before attaching the GRET.

(3) For multi-lane divided operation, use cable terminal, anchor, See Standard Drawing E 601-GCTA-01 through E 601-GCTA-06.

4. See Standard Drawings E 601-GRET-10, 11 and E 601-WBGA-06 for GRET Type II details.

5. See Standard Drawings E 601-NWGA-02, 03 and 04 for post and block assemblies details.

(6) Maximum structure width shall be 24'-3" out to out of structure(s) parallel to road centerline for skewed or perpendicular structure. In this case posts are not located over portion of structure.

(7) Maximum structure width shall be 61'-0" out to out of structure(s) parallel to roadway centerline for skewed or perpendicular structure. Modified posts (5 through 10) over the structure where required, see Standard Drawing E 601-NWGA-03. The remaining wood posts shall be shown on Standard Drawing E 601-NWGA-02.

NOTES:

(8) Post shall clear outer structure side by 4" min.

(9) This dimension is 25'-0" between posts 7 and 8. The dimension is 12'-6" or 25'-0" elsewhere.

10. For grading requirements see Standard Drawings E 601-GRET-06 through 09 and E 601-GRET-12.

INDIANA DEPARTMENT OF TRANSPORTATION

25'-0" SPAN NESTED GUARDRAIL FOR LARGE DRAINAGE STRUCTURE

SEPTEMBER 2010

STANDARD DRAWING NO. E 601-NWGA-01

RICHARD L. VanCLEAVE REGISTERED No. 9750 STATE OF INDIANA PROFESSIONAL ENGINEER

DESIGN STANDARDS ENGINEER

/s/ Richard L. VanCleave 09/01/10
DESIGN STANDARDS ENGINEER DATE

/s/ Mark A. Miller 09/01/10
CHIEF HIGHWAY ENGINEER DATE

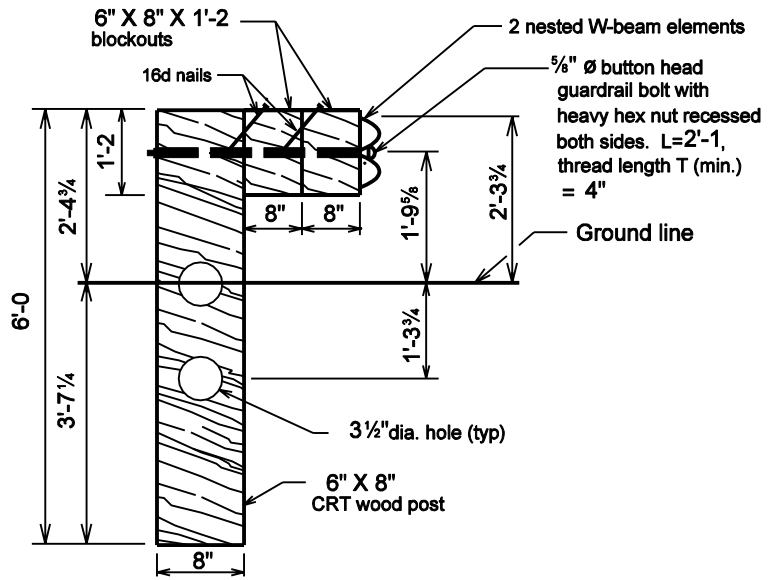

NESTED GUARDRAIL ASSEMBLY.

(Posts 5 to 10)

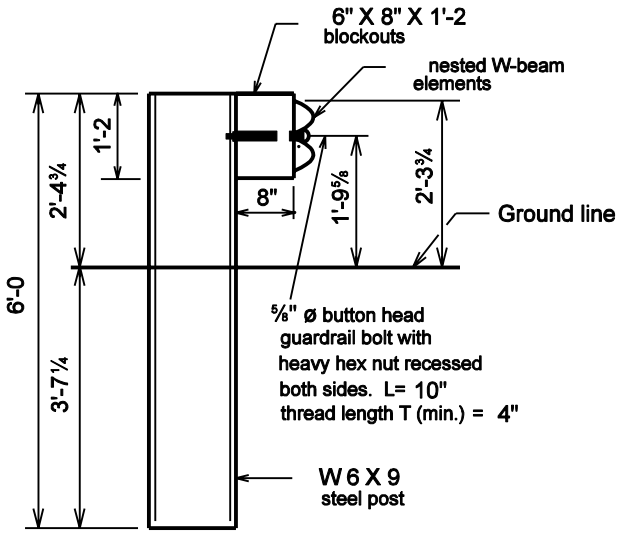

STEEL POST AND BLOCK FOR USE WITH NESTED GUARDRAIL ASSEMBLY

(Posts 1 to 4 and 11 to 14)

INDIANA DEPARTMENT OF TRANSPORTATION

NESTED GUARDRAIL ASSY.
FOR STRUCTURE WIDTH ≤ 24'-3

SEPTEMBER 2001

STANDARD DRAWING NO. E 601-NWGA-02

RICHARD L. VANCLEAVE REGISTERED No. 9750 STATE OF INDIANA PROFESSIONAL ENGINEER
DESIGN STANDARDS ENGINEER

/s/ Richard L VanCleave 9-04-01
DESIGN STANDARDS ENGINEER DATE

/s/ Firooz Zandi 9-04-01
CHIEF HIGHWAY ENGINEER DATE

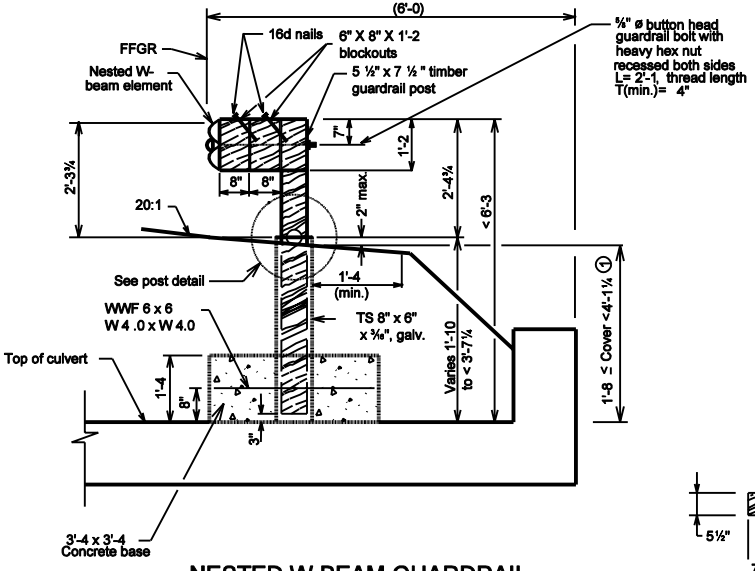

NESTED W-BEAM GUARDRAIL ASSY. WITH MODIFIED POSTS OVER STRUCTURE WIDTH (POSTS 5 TO 10)

NOTES:

① Use modified guardrail posts.

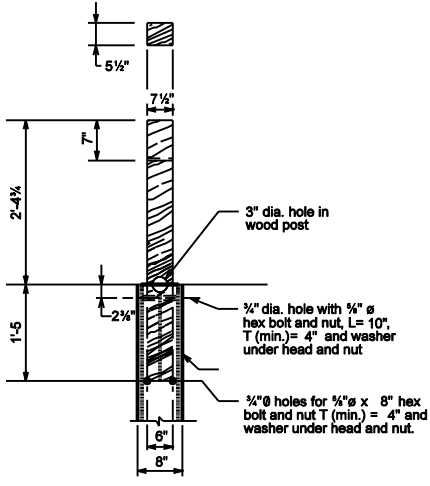

POST DETAIL

INDIANA DEPARTMENT OF TRANSPORTATION

GUARDRAIL ASSEMBLY FOR STRUCTURE WIDTH > 24'-3

SEPTEMBER 2001

STANDARD DRAWING NO. E 601-NWGA-03

RICHARD L. VANCLEAVE REGISTERED No. 9750 STATE OF Indiana PROFESSIONAL ENGINEER

DESIGN STANDARDS ENGINEER

/s/ Richard L.VanCleave 9-04-01
DESIGN STANDARDS ENGINEER DATE

/s/ Firooz Zandi 9-04-01
CHIEF HIGHWAY ENGINEER DATE

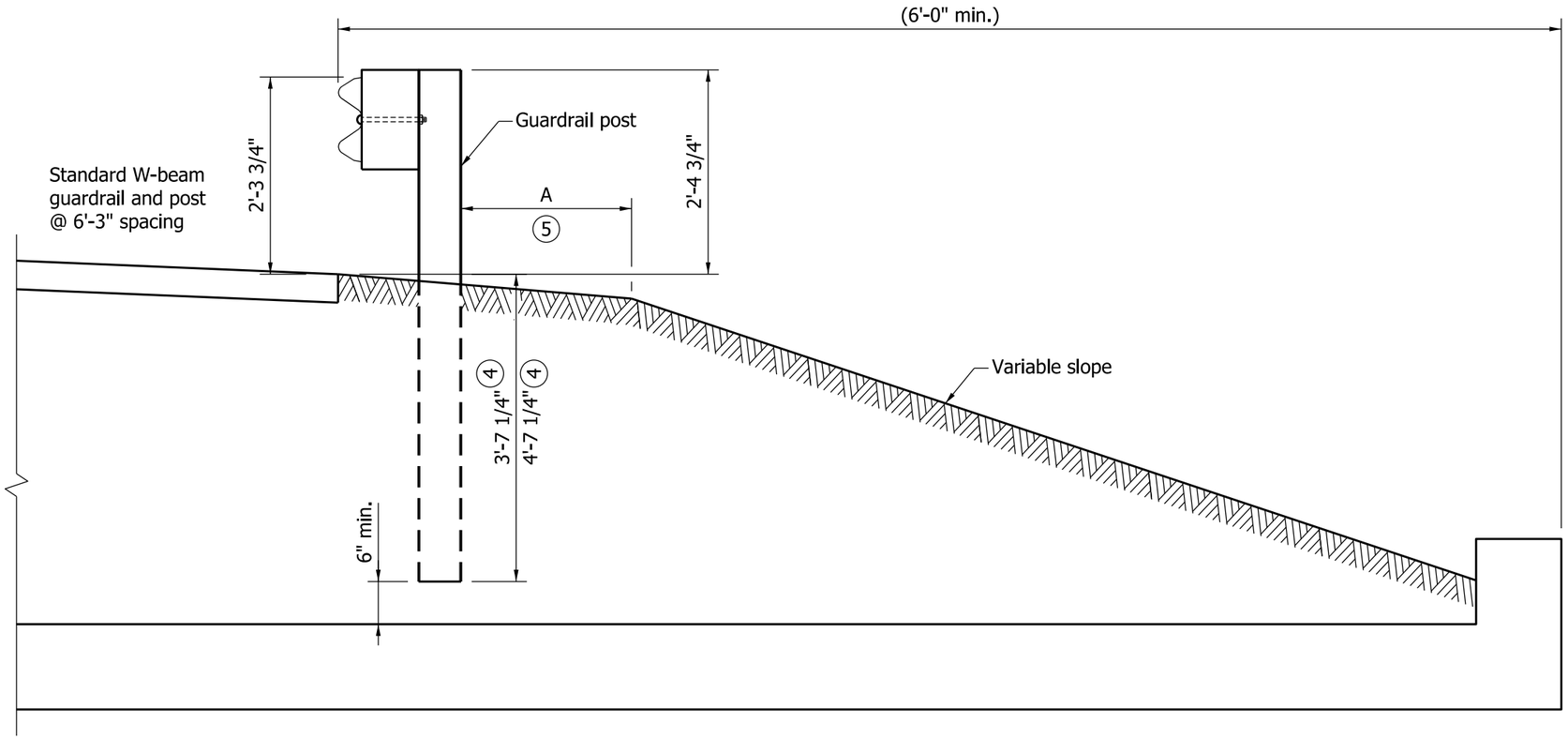

NOTES:

1. This drawing shall be used for any structure width provided cover over structure ≥ 4'-1 1/4".
2. The 6'-0" length guardrail post shall be used if 4'-1 1/4" ≤ cover ≤ 5'-1 1/4".
3. The 7'-0" long guardrail post shall be used if cover > 5'-1 1/4".

(4) 3'-7 1/4" for 6'-0" length post and 4'-7 1/4" for 7'-0" length post.

(5) A = 2'-0" for 6'-0" length post.
A = 0 (min.) for 7'-0" length post.

GUARDRAIL ASSEMBLY FOR COVER ≥ 4'-1 1/4"
FOR ANY STRUCTURE WIDTH

INDIANA DEPARTMENT OF TRANSPORTATION

GUARDRAIL ASSEMBLY FOR
ANY STRUCTURE WIDTH

SEPTEMBER 2011

STANDARD DRAWING NO. E 601-NWGA-04

RICHARD L. VanCLEAVE
REGISTERED
No. 9750
STATE OF INDIANA
PROFESSIONAL ENGINEER

DESIGN STANDARDS ENGINEER

/s/ Richard L. VanCleave 09/01/11
DESIGN STANDARDS ENGINEER DATE

/s/ Mark A. Miller 09/01/11
CHIEF HIGHWAY ENGINEER DATE

INDEX

SHEET NO.	SUBJECT
1	Roadside Obstruction Protection Guardrail Index and General Notes
2	W-Beam Guardrail, Multi-Lane Divided Roadway, Working Width ≥ 2' - 9" and < 3' - 3"
3	W-Beam Guardrail, Multi-Lane Divided Roadway, Working Width ≥ 3' - 3" and < 4' - 0"
4	W-Beam Guardrail, Two-Lane Two-Way Roadway, Working Width ≥ 2' - 9" and < 3' - 3"
5	W-Beam Guardrail, Two-Lane Two-Way Roadway, Working Width ≥ 3' - 3" and < 4' - 0"
6	MGS W-Beam Guardrail, Multi-Lane Divided Roadway, Working Width ≥ 4' - 0" and < 4' - 5"
7	MGS W-Beam Guardrail, Multi-Lane Divided Roadway, Working Width ≥ 4' - 5" and < 5' - 0"
8	MGS W-Beam Guardrail, Two-Lane Two-Way Roadway, Working Width ≥ 4' - 0" and < 4' - 5"
9	MGS W-Beam Guardrail, Two-Lane Two-Way Roadway, Working Width ≥ 4' - 5" and < 5' - 0"

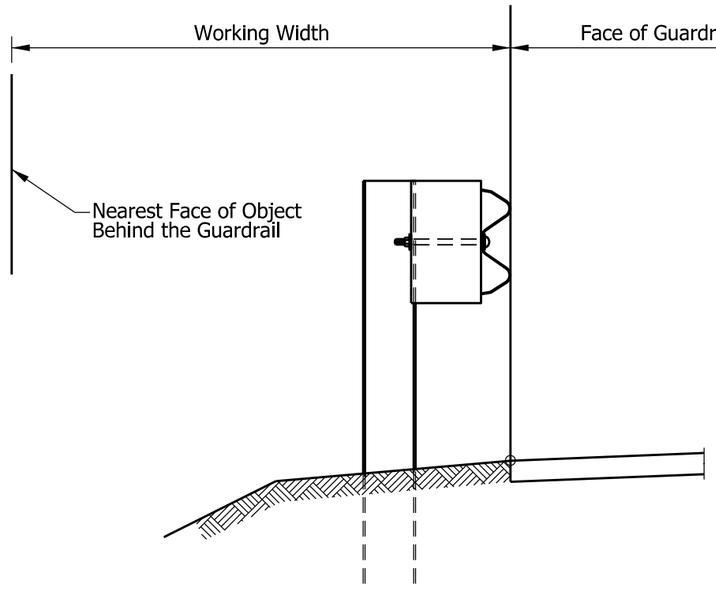

WORKING WIDTH

GENERAL NOTES:

1. W-Beam Guardrail shall be used where working width is less than 4 ft.
2. MGS W-Beam shall be used where working width is 4 ft or greater.

INDIANA DEPARTMENT OF TRANSPORTATION

ROADSIDE OBSTRUCTION PROTECTION
GUARDRAIL INDEX AND GENERAL NOTES

SEPTEMBER 2019

STANDARD DRAWING NO. E 601-RHPG-01

ELIZABETH W. PHILLIPS
REGISTERED
No. 10200124
STATE OF INDIANA
PROFESSIONAL ENGINEER

5/12/2019
DESIGN STANDARDS ENGINEER DATE

5/31/2019
CHIEF ENGINEER DATE

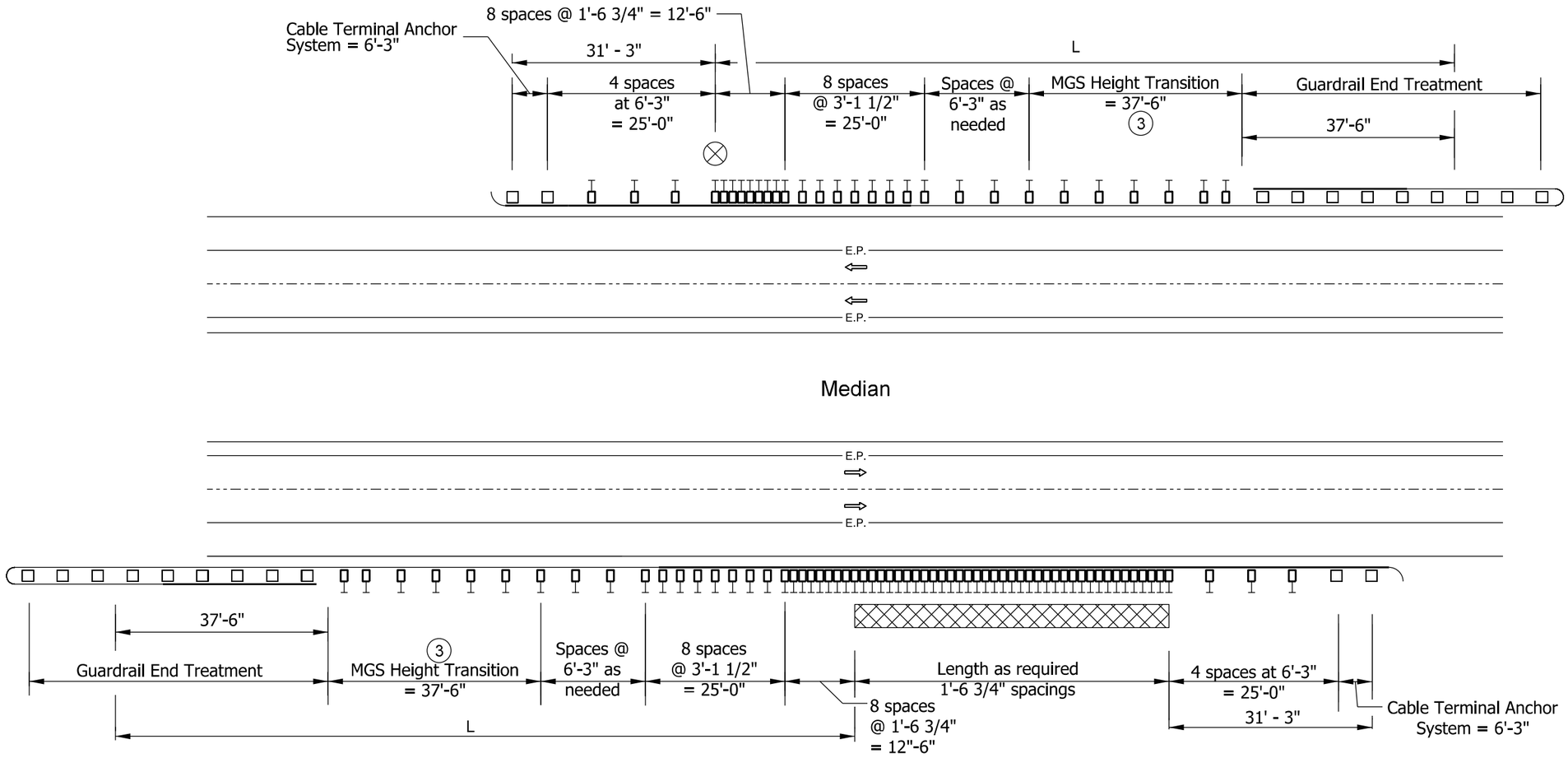

MULTI-LANE DIVIDED ROADWAY GUARDRAIL LAYOUT

NOTES:

1. This configuration shall be used where W-beam guardrail at 1 ft - 6 3/4 in. post spacing is specified on a divided lane roadway to shield an isolated or extended obstruction.
2. Dimensions and details not shown on this drawing shall be as shown on the plans.

(3) The MGS height transition shall not be included in the length of the guardrail end treatment.

4. See Standard Drawing Series E 601-GCTA for cable terminal anchor system details.
5. See Standard Drawing Series E 601-WBGA for W-beam guardrail details.
6. See Standard Drawing E 601-MGSA-16 for MGS height transition details.

LEGEND:

L = Length of need

⊗ = Isolated obstruction

▨ = Extended obstruction

INDIANA DEPARTMENT OF TRANSPORTATION

W-BEAM GUARDRAIL, MULTI-LANE DIVIDED ROADWAY, WORKING WIDTH ≥ 2' - 9" AND < 3' - 3"

SEPTEMBER 2019

STANDARD DRAWING NO. E 601-RHPG-02

ELIZABETH W. PHILLIPS REGISTERED No. 10200124 STATE OF INDIANA PROFESSIONAL ENGINEER

5/12/2019
DESIGN STANDARDS ENGINEER DATE

5/31/2019
CHIEF ENGINEER DATE

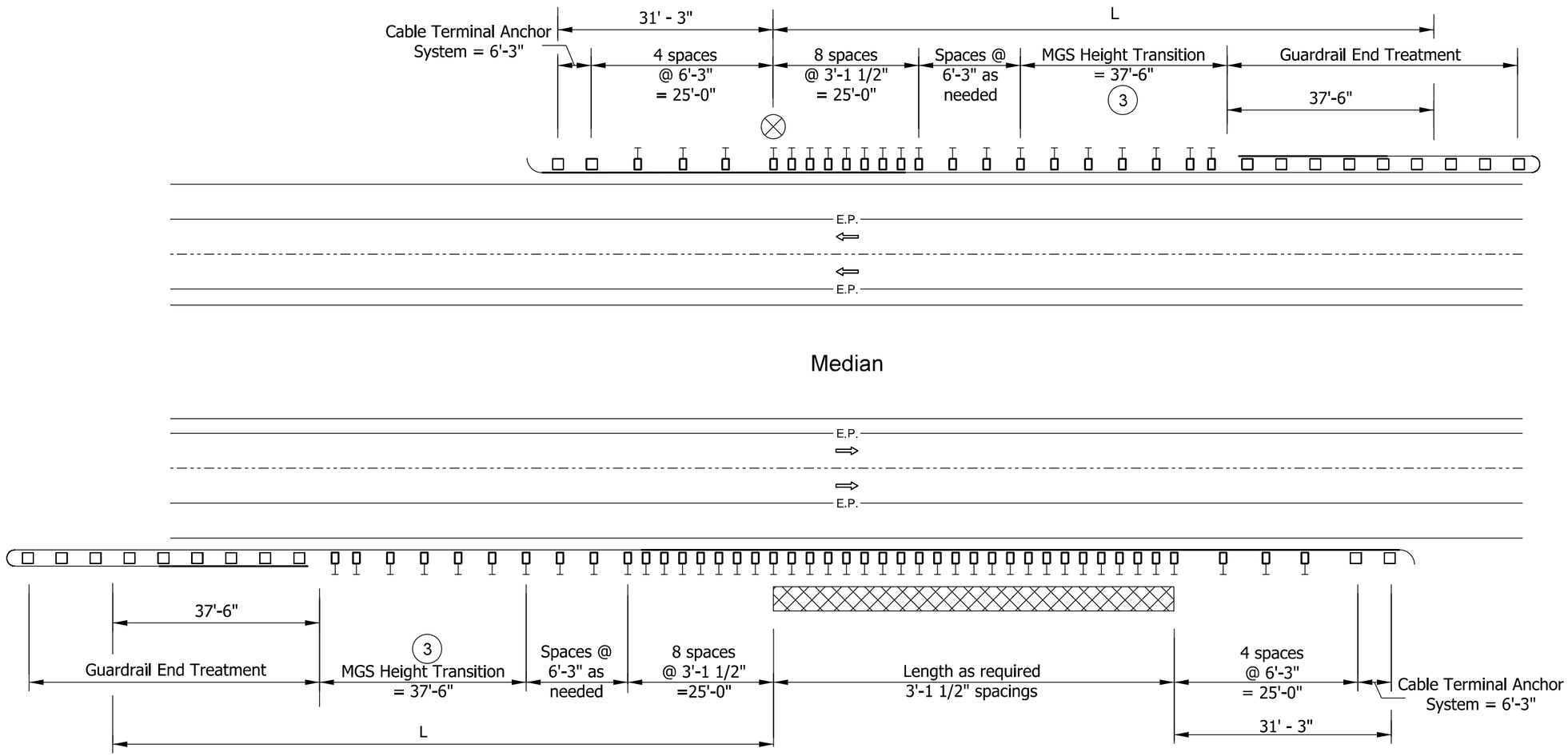

MULTI-LANE DIVIDED ROADWAY GUARDRAIL LAYOUT

NOTES:

1. This configuration shall be used where W-beam guardrail at 3 ft - 1 1/2 in. post spacing is specified on a divided lane roadway to shield an isolated or extended obstruction.
2. Dimensions and details not shown on this drawing shall be as shown on the plans.
3. (3) The MGS height transition shall not be included in the length of the guardrail end treatment.
4. See Standard Drawing Series E 601-GCTA for cable terminal anchor system details.
5. See Standard Drawing Series E 601-WBGA for W-beam guardrail details.
6. See Standard Drawing E 601-MGSA-16 for MGS height transition details.

LEGEND:

L = Length of need

⊗ = Isolated obstruction

▨ = Extended obstruction

INDIANA DEPARTMENT OF TRANSPORTATION

W-BEAM GUARDRAIL, MULTI-LANE DIVIDED ROADWAY, WORKING WIDTH ≥ 3' - 3" AND < 4' - 0"

SEPTEMBER 2019

STANDARD DRAWING NO. E 601-RHPG-03

ELIZABETH W. PHILLIPS REGISTERED No. 10200124 STATE OF INDIANA PROFESSIONAL ENGINEER

5/12/2019
DESIGN STANDARDS ENGINEER DATE

5/31/2019
CHIEF ENGINEER DATE

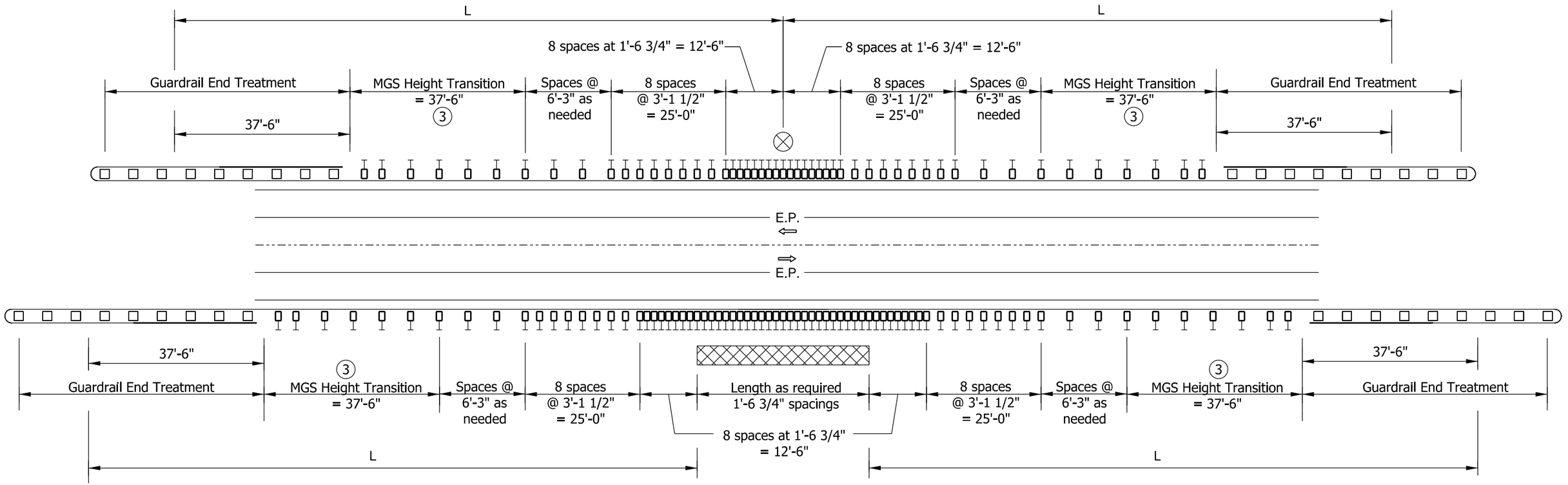

TWO-LANE TWO-WAY ROADWAY GUARDRAIL LAYOUT

NOTES:

1. This configuration shall be used where W-beam guardrail at 1 ft - 6 3/4 in. post spacing is specified on a two-lane two-way roadway to shield an isolated or extended obstruction.
2. Dimensions and details not shown on this drawing shall be as shown on the plans.

(3) The MGS height transition shall not be included in the length of the guardrail end treatment.

4. See Standard Drawing Series E 601-WBGA for W-beam guardrail details.
5. See Standard Drawing E 601-MGSA-16 for MGS height transition details.

LEGEND:

L = Length of need

⊗ = Isolated obstruction

= Extended obstruction

INDIANA DEPARTMENT OF TRANSPORTATION

W-BEAM GUARDRAIL, TWO-LANE
TWO-WAY ROADWAY,
WORKING WIDTH ≥ 2' - 9" AND < 3' - 3"
SEPTEMBER 2019

STANDARD DRAWING NO. E 601-RHPG-04

ELIZABETH W. PHILLIPS
REGISTERED
No. 10200124
STATE OF INDIANA
PROFESSIONAL ENGINEER

5/12/2019
DESIGN STANDARDS ENGINEER — DATE

5/31/2019
CHIEF ENGINEER — DATE

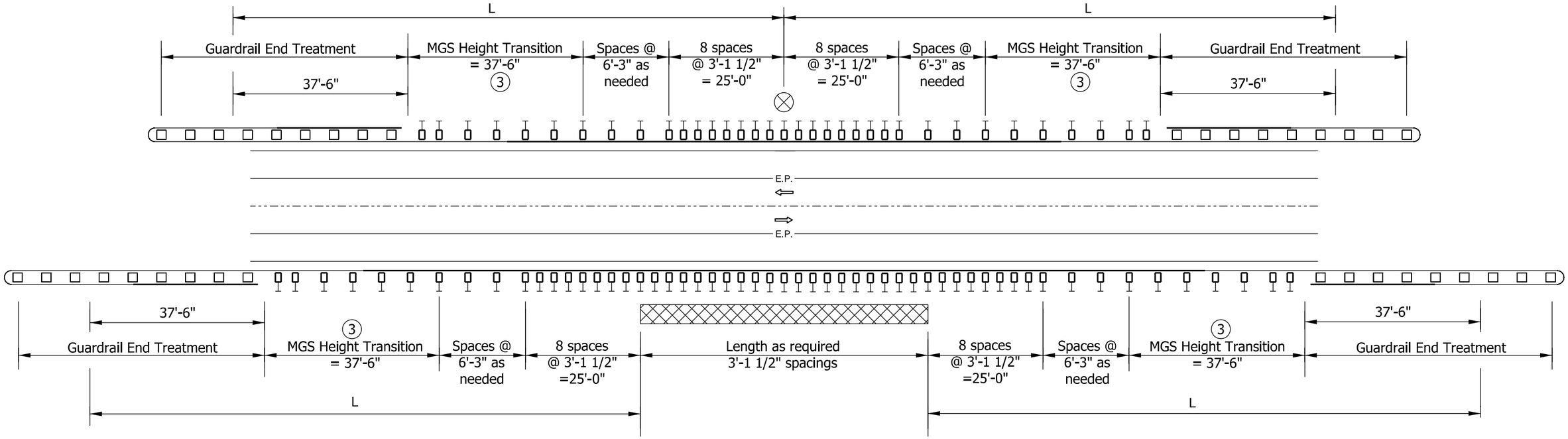

TWO-LANE TWO-WAY ROADWAY GUARDRAIL LAYOUT

NOTES:

1. This configuration shall be used where W-beam guardrail at 3 ft - 1 1/2 in. post spacing is specified on a two-lane two-way roadway to shield an isolated or extended obstruction.
2. Dimensions and details not shown on this drawing shall be as shown on the plans.

(3) The MGS height transition shall not be included in the length of the guardrail end treatment.

4. See Standard Drawing Series E 601-WBGA for W-beam guardrail details.
5. See Standard Drawing E 601-MGSA-16 for MGS height transition details.

LEGEND:

L = Length of need

⊗ = Isolated obstruction

▨ = Extended obstruction

INDIANA DEPARTMENT OF TRANSPORTATION

W-BEAM GUARDRAIL, TWO-LANE
TWO-WAY ROADWAY,
WORKING WIDTH ≥ 3' - 3" AND < 4' - 0"
SEPTEMBER 2019

STANDARD DRAWING NO. E 601-RHPG-05

ELIZABETH W. PHILLIPS
REGISTERED
No. 10200124
STATE OF INDIANA
PROFESSIONAL ENGINEER

5/12/2019
DESIGN STANDARDS ENGINEER DATE

5/31/2019
CHIEF ENGINEER DATE

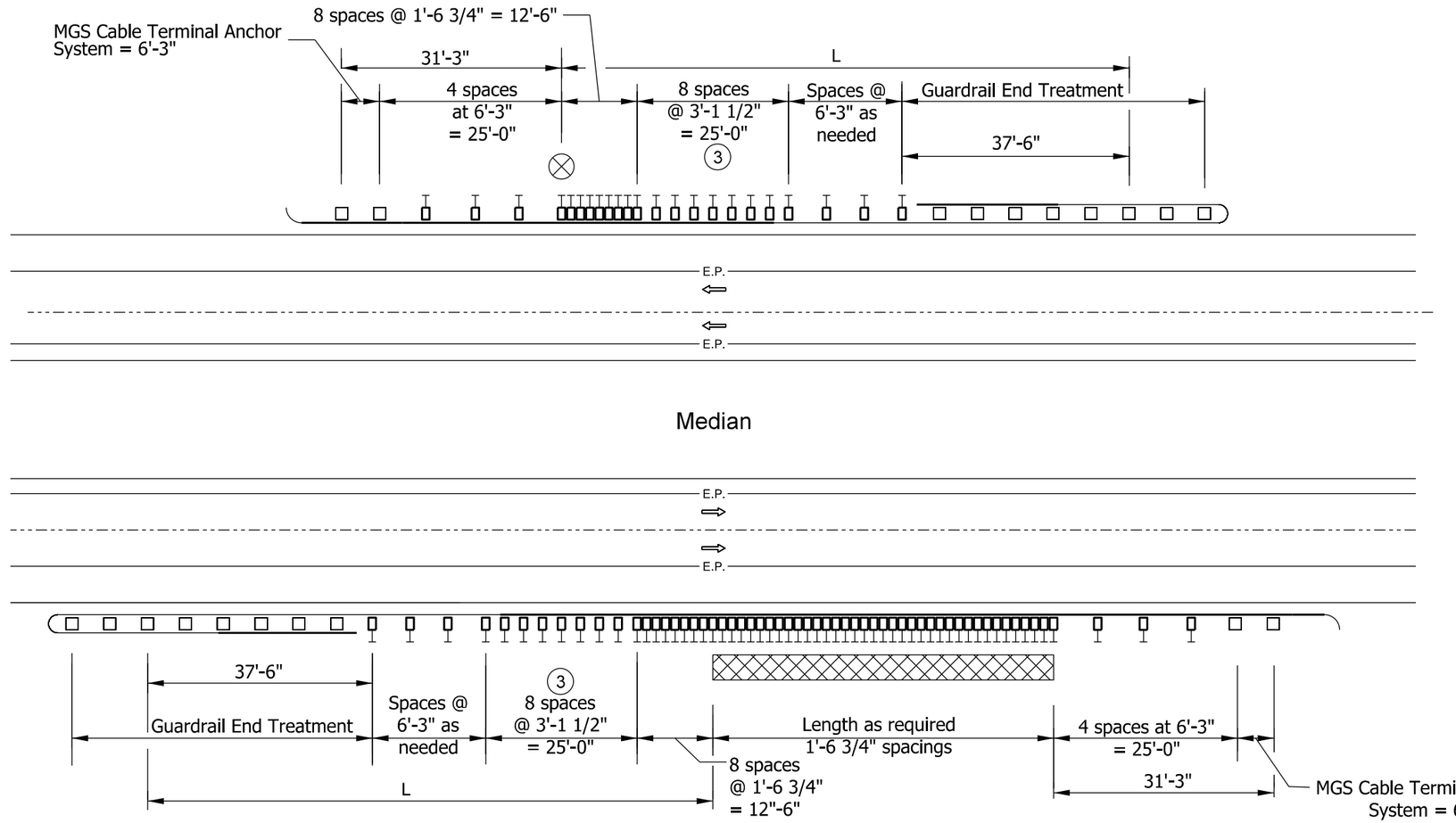

MULTI-LANE DIVIDED ROADWAY GUARDRAIL LAYOUT

NOTES:

1. This configuration shall be used where MGS W-beam guardrail at 1 ft - 6 3/4 in. post spacing is specified on a divided lane roadway to shield an isolated or extended obstruction.
2. Dimensions and details not shown on this drawing shall be as shown on the plans.
3. (3) Posts at 3 ft - 1 1/2 in. spacing shall not be included in the length of the guardrail end treatment.
4. See Standard Drawing Series E 601-MGSA for MGS cable terminal anchor system details.
5. See Standard Drawing Series E 601-MGSA for MGS W-beam guardrail details.

LEGEND:

L = Length of need

⊗ = Isolated obstruction

▨ = Extended obstruction

INDIANA DEPARTMENT OF TRANSPORTATION

MGS W-BEAM GUARDRAIL, MULTI-LANE DIVIDED ROADWAY,
WORKING WIDTH ≥ 4' - 0" AND < 4' - 5"
SEPTEMBER 2019

STANDARD DRAWING NO. E 601-RHPG-06

ELIZABETH W. PHILLIPS REGISTERED No. 10200124 STATE OF INDIANA PROFESSIONAL ENGINEER

5/12/2019
DESIGN STANDARDS ENGINEER DATE

5/31/2019
CHIEF ENGINEER DATE

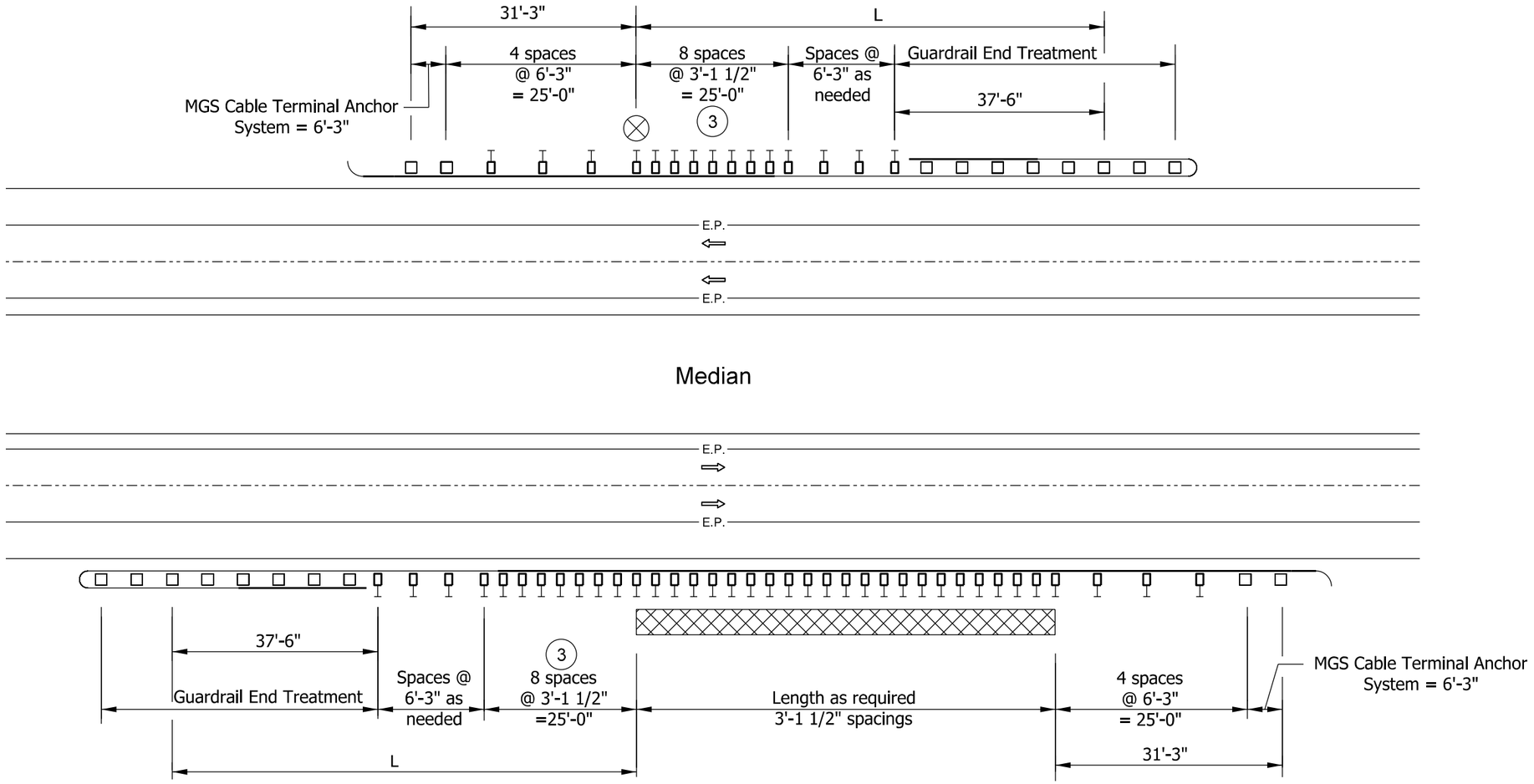

MULTI-LANE DIVIDED ROADWAY GUARDRAIL LAYOUT

NOTES:

1. This configuration shall be used where MGS W-beam guardrail at 3 ft - 1 1/2 in. post spacing is specified on a divided lane roadway to shield an isolated or extended obstruction.
2. Dimensions and details not shown on this drawing shall be as shown on the plans.

(3) Posts at 3 ft - 1 1/2 in. spacing shall not be included in the length of the guardrail end treatment.

4. See Standard Drawing Series E 601-MGSA for MGS cable terminal anchor system details.
5. See Standard Drawing Series E 601-MGSA for MGS W-beam guardrail details.

LEGEND:

L = Length of need

⊗ = Isolated obstruction

▨ = Extended obstruction

INDIANA DEPARTMENT OF TRANSPORTATION

MGS W-BEAM GUARDRAIL, MULTI-LANE DIVIDED ROADWAY,
WORKING WIDTH ≥ 4' - 5" AND < 5' - 0"
SEPTEMBER 2019

STANDARD DRAWING NO. E 601-RHPG-07

ELIZABETH W. PHILLIPS
REGISTERED
No. 10200124
STATE OF INDIANA
PROFESSIONAL ENGINEER

5/12/2019
DESIGN STANDARDS ENGINEER — DATE

5/31/2019
CHIEF ENGINEER — DATE

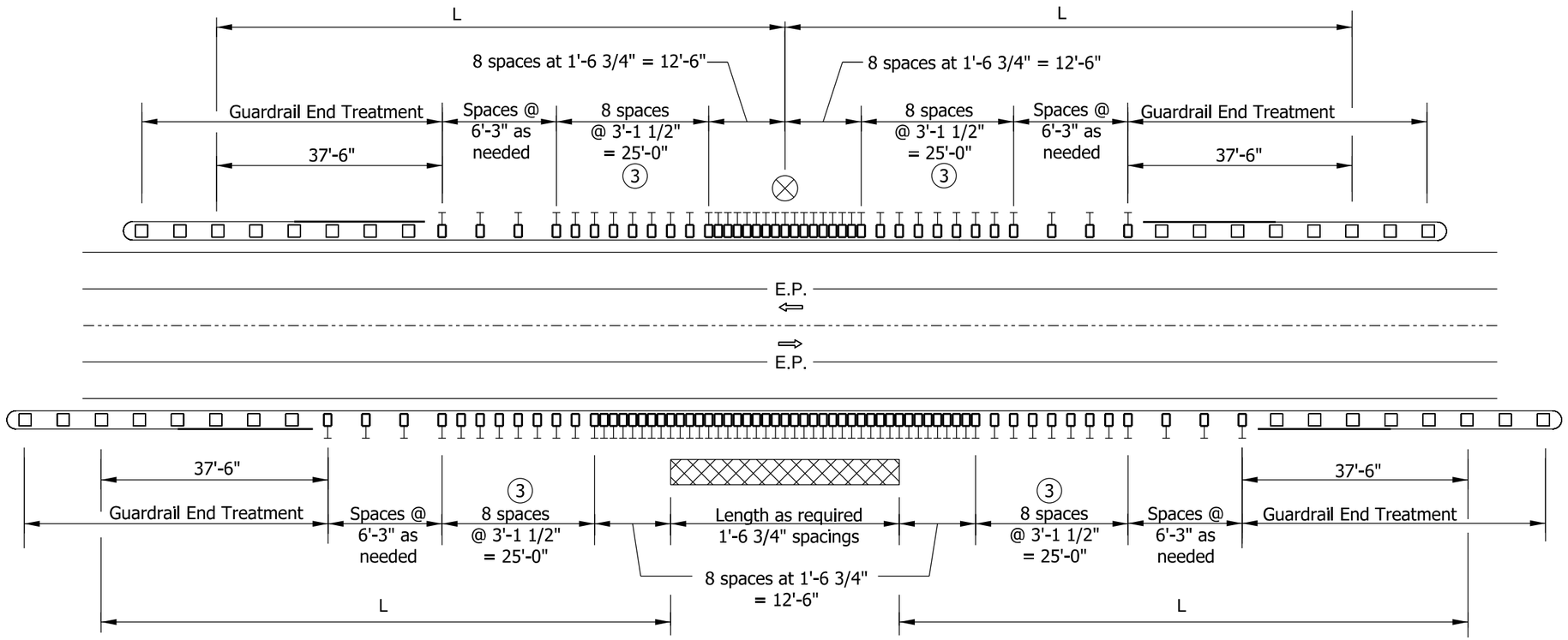

TWO-LANE TWO-WAY ROADWAY GUARDRAIL LAYOUT

NOTES:

1. This configuration shall be used where MGS W-beam guardrail at 1 ft - 6 3/4 in. post spacing is specified on a two-lane two-way roadway to shield an isolated or extended obstruction.
2. Dimensions and details not shown on this drawing shall be as shown on the plans.

(3) Posts at 3 ft - 1 1/2 in. spacing shall not be included in the length of the guardrail end treatment.

4. See Standard Drawing Series E 601-MGSA for MGS W-beam guardrail details.

LEGEND:

L = Length of need

⊗ = Isolated obstruction

▨ = Extended obstruction

INDIANA DEPARTMENT OF TRANSPORTATION

MGS W-BEAM GUARDRAIL, TWO-LANE TWO-WAY ROADWAY, WORKING WIDTH ≥ 4' - 0" AND < 4' - 5"

SEPTEMBER 2019

STANDARD DRAWING NO. E 601-RHPG-08

ELIZABETH W. PHILLIPS REGISTERED No. 10200124 STATE OF INDIANA PROFESSIONAL ENGINEER

5/12/2019
DESIGN STANDARDS ENGINEER DATE

5/31/2019
CHIEF ENGINEER DATE

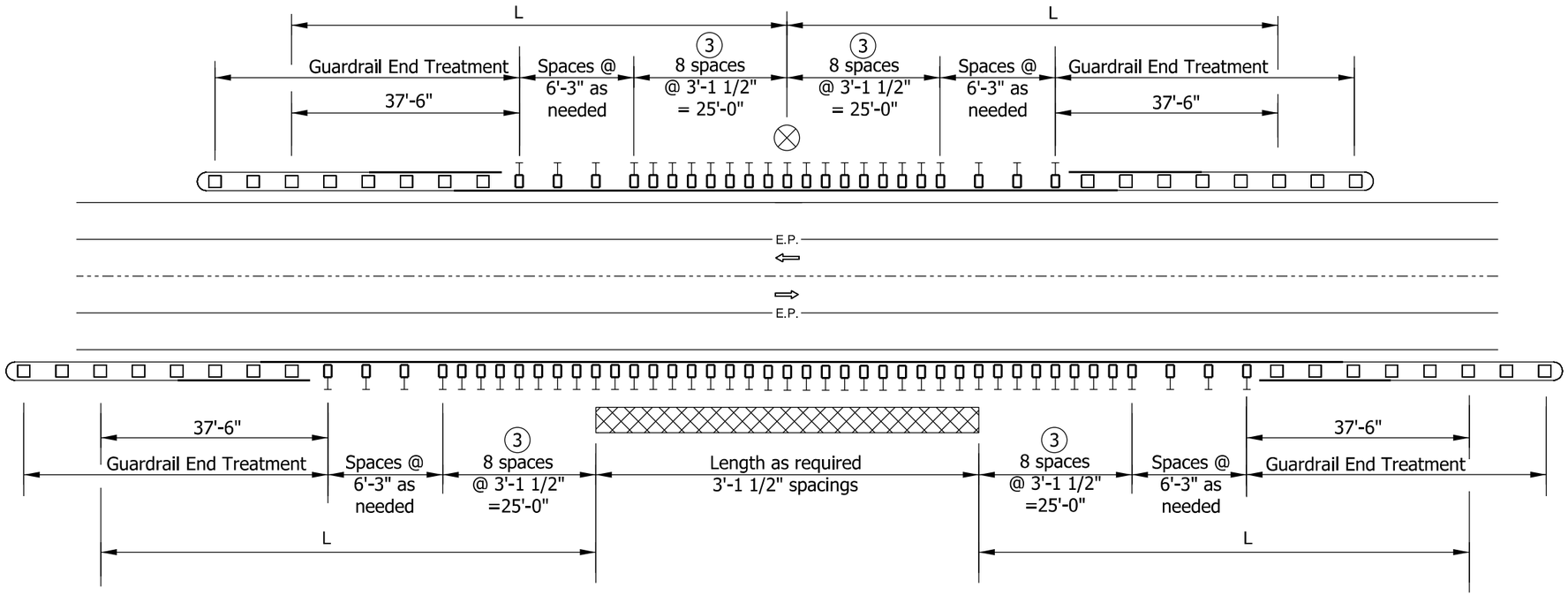

TWO-LANE TWO-WAY ROADWAY GUARDRAIL LAYOUT

NOTES:

1. This configuration shall be used where MGS W-beam guardrail at 3 ft - 1 1/2 in. post spacing is specified on a two-lane two-way roadway to shield an isolated or extended obstruction.
2. Dimensions and details not shown on this drawing shall be as shown on the plans.

(3) Posts at 3 ft - 1 1/2 in. spacing shall not be included in the length of the guardrail end treatment.

4. See Standard Drawing Series E 601-MGSA for MGS W-beam guardrail details.

LEGEND:

L = Length of need

⊗ = Isolated obstruction

▨ = Extended obstruction

INDIANA DEPARTMENT OF TRANSPORTATION

MGS W-BEAM GUARDRAIL, TWO-LANE TWO-WAY ROADWAY, WORKING WIDTH ≥ 4' - 5" AND < 5' - 0"

SEPTEMBER 2019

STANDARD DRAWING NO. E 601-RHPG-09

ELIZABETH W. PHILLIPS REGISTERED No. 10200124 STATE OF INDIANA PROFESSIONAL ENGINEER

5/12/2019
DESIGN STANDARDS ENGINEER DATE

5/31/2019
CHIEF ENGINEER DATE

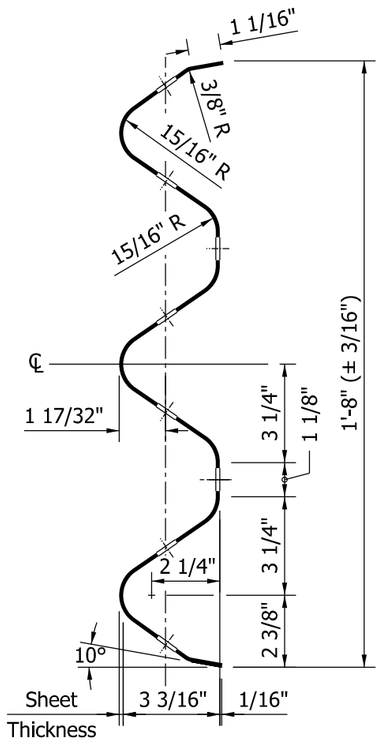

THRIE-BEAM RAIL SECTION

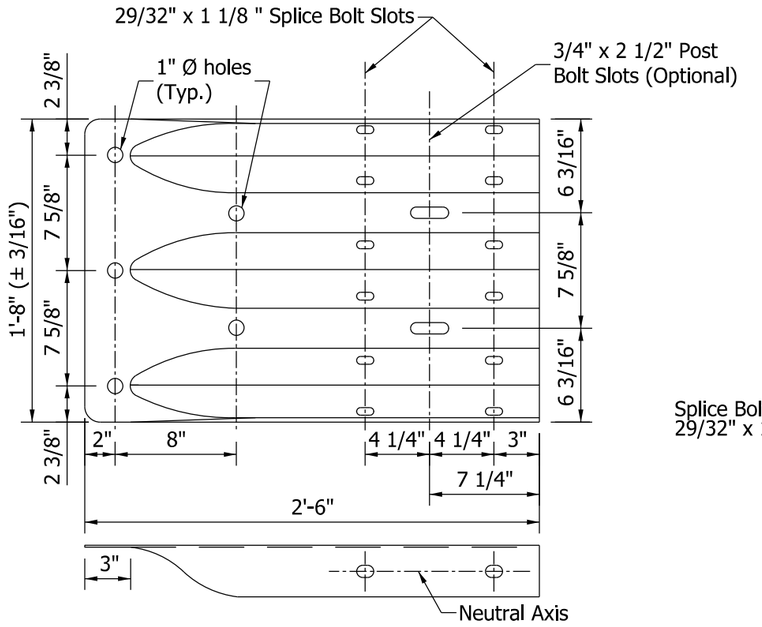

THRIE-BEAM
TERMINAL CONNECTOR

NOTES:

1. All thrie-beam components shall be 12 gage, except as shown.

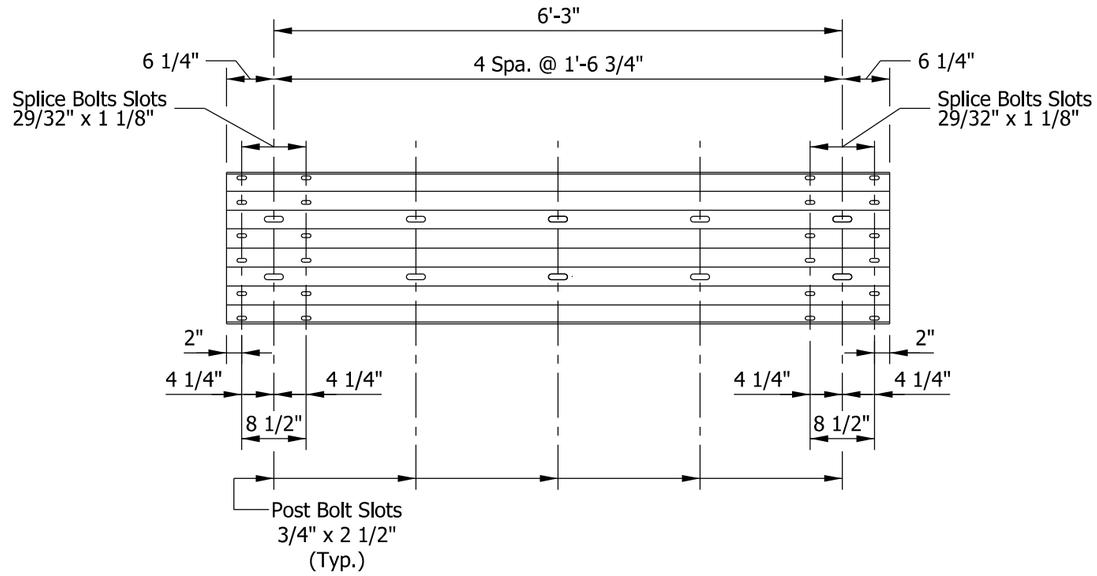

6'-3" THRIE-BEAM RAIL SECTION

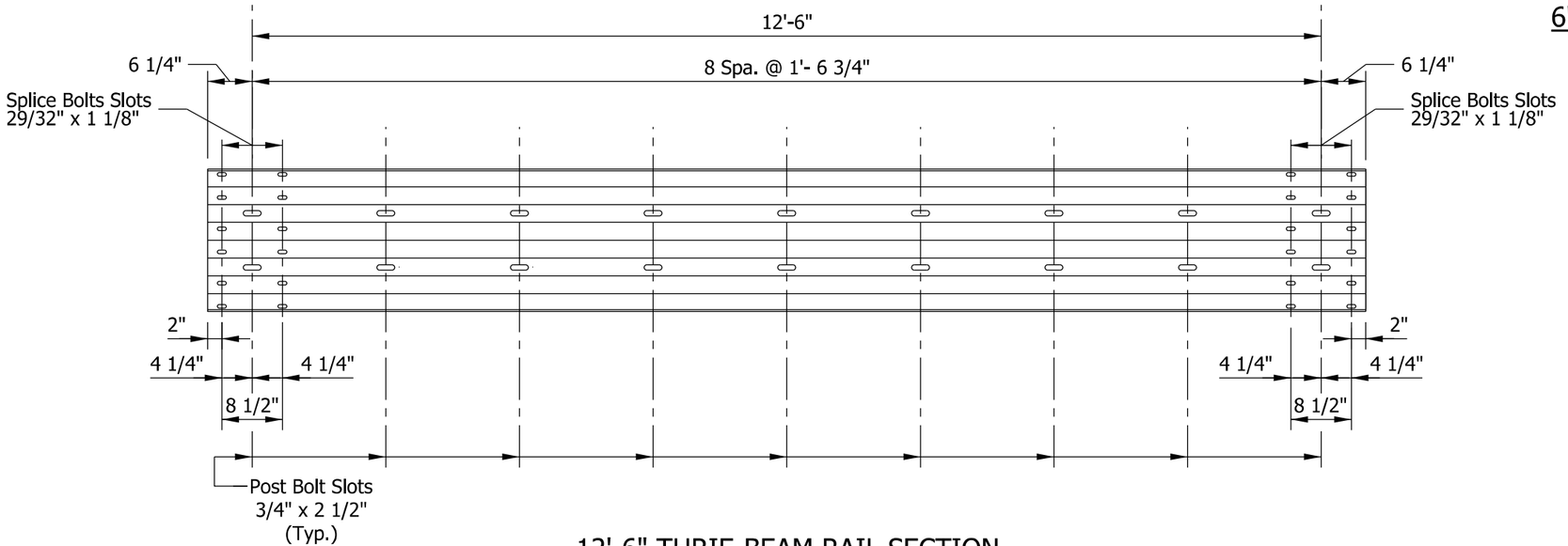

12'-6" THRIE-BEAM RAIL SECTION

INDIANA DEPARTMENT OF TRANSPORTATION

THRIE-BEAM
GUARDRAIL COMPONENTS

SEPTEMBER 2018

STANDARD DRAWING NO. E 601-TBGC-01

ELIZABETH W. PHILLIPS
REGISTERED
No.
10200124
STATE OF
INDIANA
PROFESSIONAL ENGINEER

/s/ Elizabeth W. Phillips 03/09/18
DESIGN STANDARDS ENGINEER DATE

/s/ John Leckie 04/25/18
CHIEF ENGINEER DATE

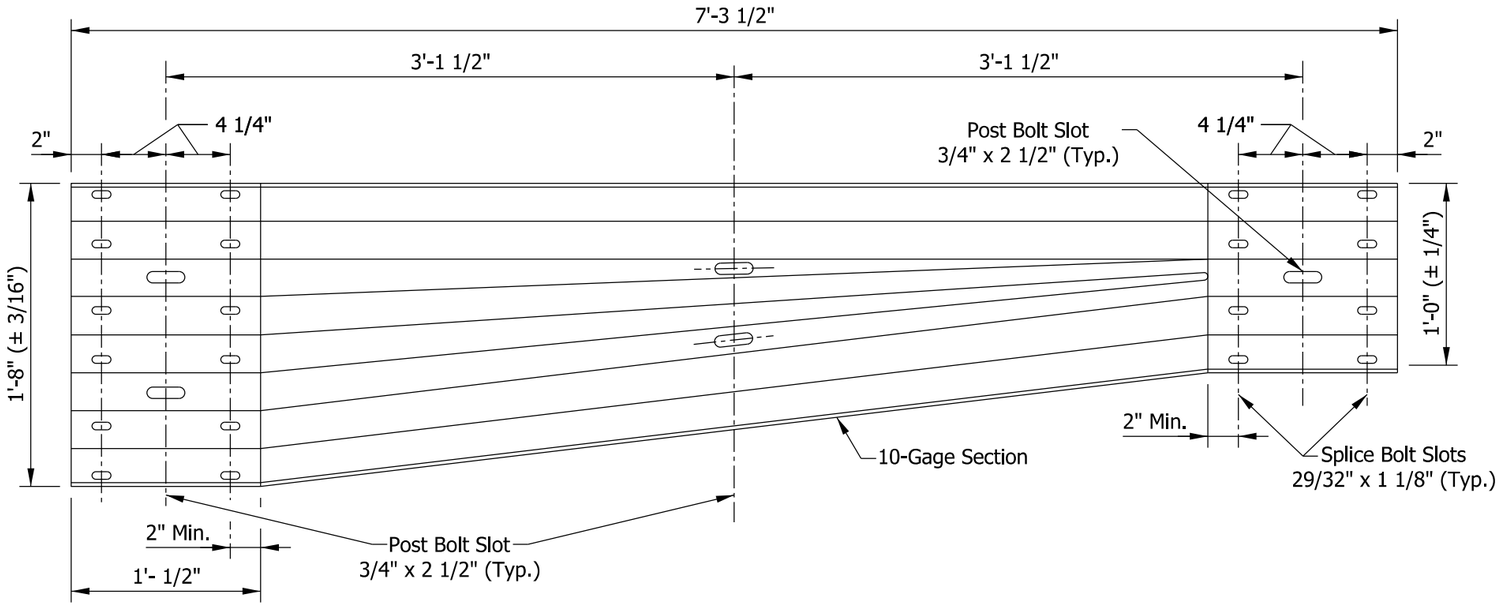

ASYMMETRIC MGS W-BEAM TO THRIE-BEAM TRANSITION SECTION

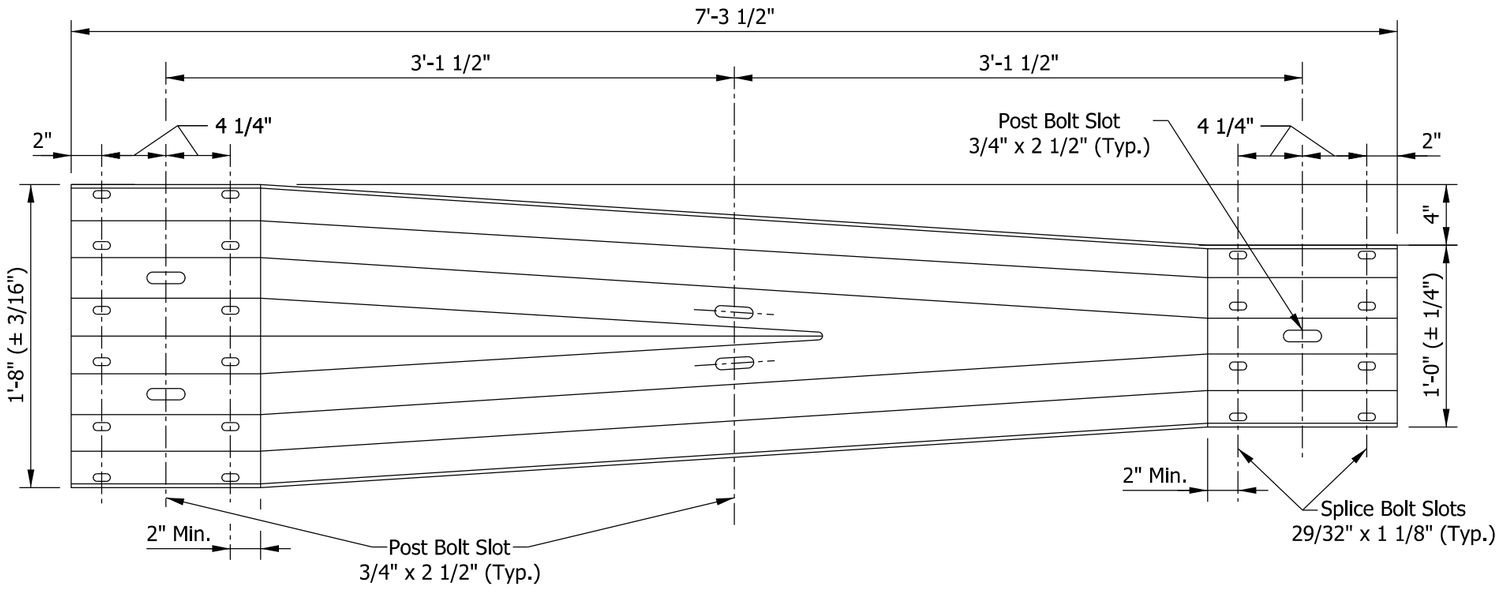

SYMMETRIC W-BEAM TO THRIE-BEAM TRANSITION SECTION

NOTES:

1. All thrie-beam components shall be 12 gage, except as shown.

INDIANA DEPARTMENT OF TRANSPORTATION

THRIE BEAM
GUARDRAIL COMPONENTS

SEPTEMBER 2018

STANDARD DRAWING NO. E 601-TBGC-02

ELIZABETH W. PHILLIPS
REGISTERED
No.
10200124
STATE OF
INDIANA
PROFESSIONAL ENGINEER

/s/ Elizabeth W. Phillips 03/09/18
DESIGN STANDARDS ENGINEER DATE

/s/ John Leckie 04/25/18
CHIEF ENGINEER DATE

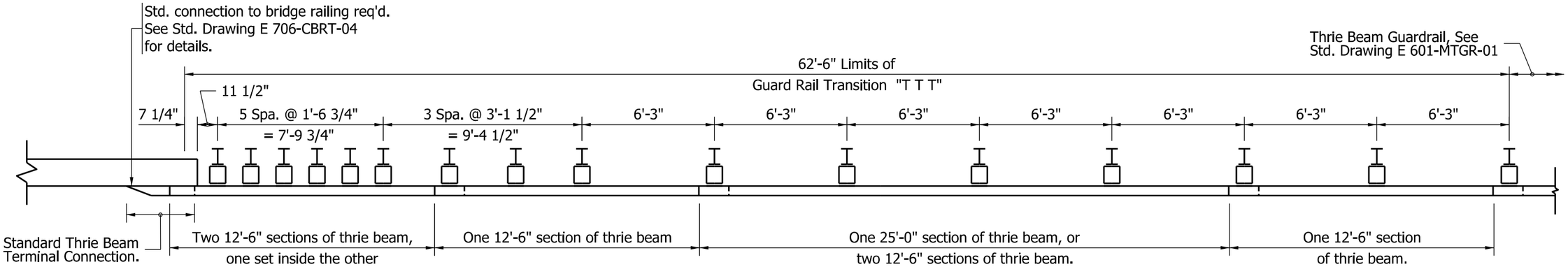

PARTIAL PLAN

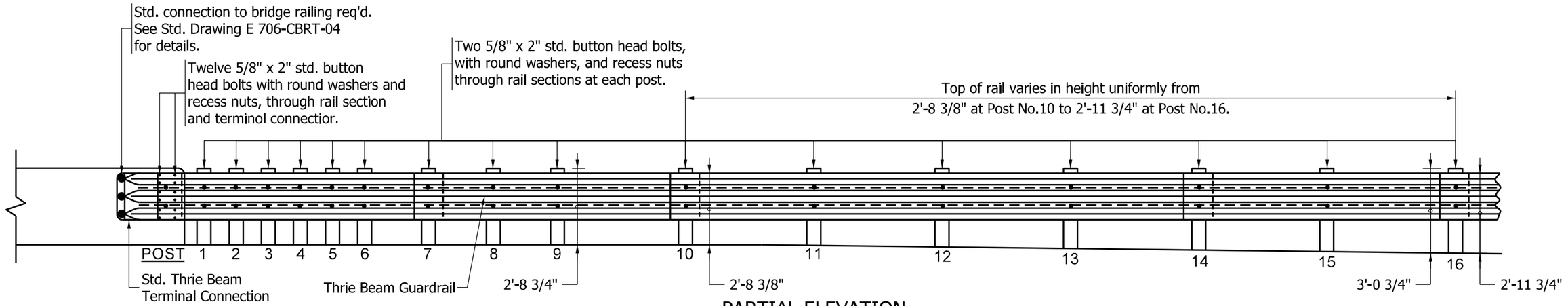

PARTIAL ELEVATION

NOTES:

1. See Standard Drawings E 601-TTGB-01 and E 601-TTGB-03 for Thrie Beam Guardrail post and blockout details from bridge rail to Post No. 10.

2. See Standard Drawing E 601-TTGB-03 for Thrie Beam Guardrail post and blockout details with the exception of height above shoulder surface for Posts No. 11 through 16.

INDIANA DEPARTMENT OF TRANSPORTATION

THRIE BEAM GUARDRAIL
TO THRIE BEAM GUARDRAIL
TRANSITION, TTT

SEPTEMBER 2011

STANDARD DRAWING NO. E 601-TMTT-01

RICHARD L. VanCLEAVE
REGISTERED
No. 9750
STATE OF INDIANA
PROFESSIONAL ENGINEER

DESIGN STANDARDS ENGINEER

Richard L. VanCleave 9-1-11
DESIGN STANDARDS ENGINEER DATE

9/1/11
CHIEF HIGHWAY ENGINEER DATE

GENERAL NOTES

1. This drawing shall be used where guardrail transition type GP is specified to connect W-beam guardrail to a pier or frame bent collision wall.
2. The details on this drawing are for the assembly and installation of the deflector components for connecting guardrail transition type GP to a pier or frame bent collision wall.
3. The anchor bolt shall be anchored with a chemical anchor system shown on the Department's List of Approved Chemical Anchor Systems.

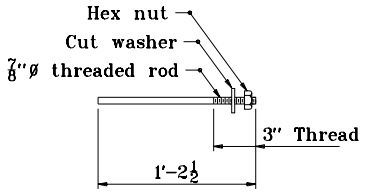

ANCHOR BOLT

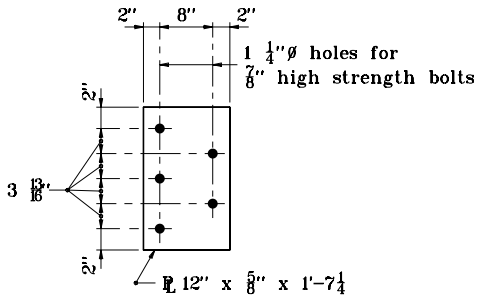

PLATE WASHER

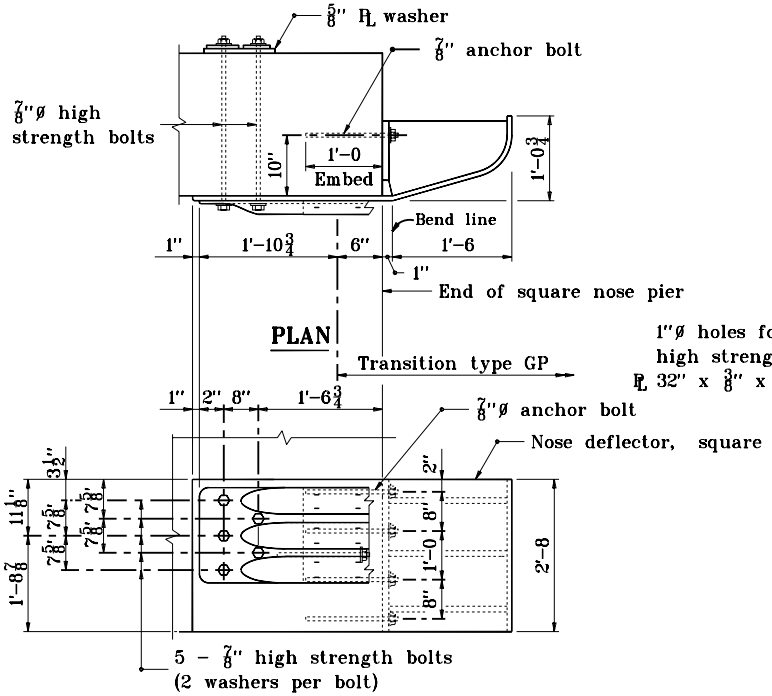

ELEVATION

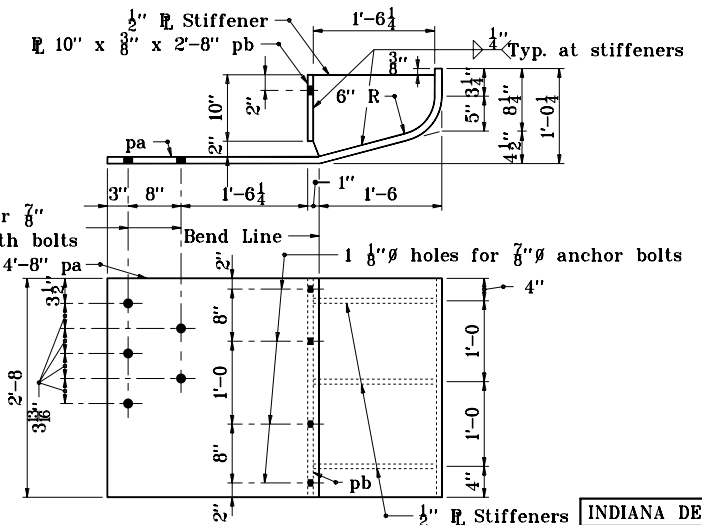

DETAIL OF NOSE DEFLECTOR - SQUARE

ATTACHMENT AT SQUARE NOSE PIER

INDIANA DEPARTMENT OF TRANSPORTATION

TRANSITION AT PIER TYPE GP

SEPTEMBER 1998

STANDARD DRAWING NO. **E 601-TPGP-01**

ANTHONY L. UREMOVICH REGISTERED No. 18095 STATE OF INDIANA PROFESSIONAL ENGINEER

DESIGN STANDARDS ENGINEER

DETAILS PLACED IN THIS FORMAT	11-15-99
/s/ Anthony L. Uremovich, DESIGN STANDARDS ENGINEER	11-15-99
/s/ Firooz Zandi, CHIEF HIGHWAY ENGINEER	11-15-99
ORIGINALLY APPROVED	9-01-98

Radius	A	B	C	D
1'-0	$2\frac{3}{4}$	$9\frac{1}{2}$	$11\frac{1}{4}$"	$2\frac{3}{4}$"
1'-$1\frac{1}{2}$	$2\frac{3}{16}$	$10\frac{1}{2}$	$9\frac{13}{16}$"	$4\frac{3}{8}$"
1'-3	$1\frac{3}{4}$	$11\frac{1}{2}$	$8\frac{9}{16}$"	$4\frac{3}{8}$"
1'-$4\frac{1}{2}$	$1\frac{1}{2}$	$12\frac{1}{2}$	$7\frac{3}{16}$"	$7\frac{3}{8}$"
1'-6	$1\frac{1}{4}$	$13\frac{1}{2}$	$6\frac{1}{4}$"	$8\frac{3}{4}$"

GENERAL NOTES

1. This drawing shall be used where guardrail transition type GP is specified to connect W-beam guardrail to a pier or frame bent collision wall.

2. The details on this drawing are for the assembly and installation of the deflector components for connecting guardrail transition type GP to a pier or frame bent collision wall.

(3) See Standard Drawing E 601-TPGP-01 for anchor bolt and plate washer details.

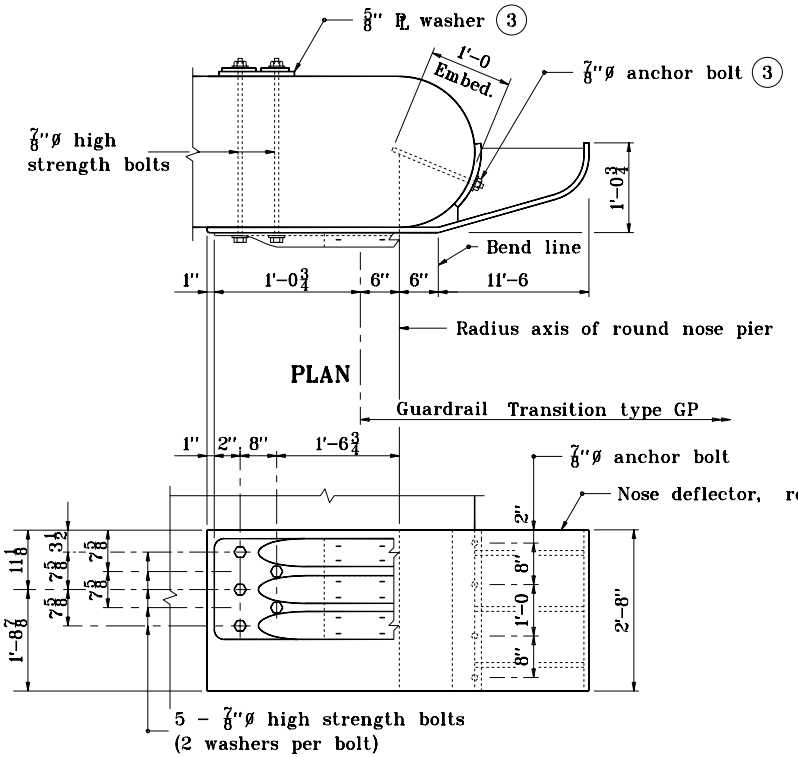

ELEVATION

ATTACHMENT AT ROUND NOSE PIER

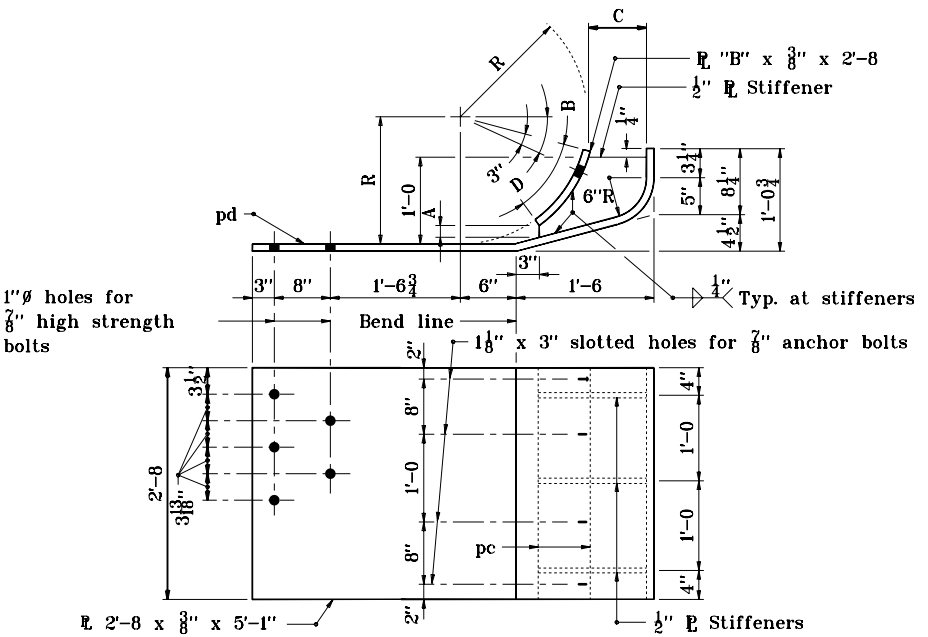

DETAIL OF NOSE DEFLECTOR - ROUND

INDIANA DEPARTMENT OF TRANSPORTATION

TRANSITION AT PIER TYPE GP

SEPTEMBER 1998

STANDARD DRAWING NO. E 601-TPGP-02

ANTHONY L. UREMOVICH REGISTERED No. 18095 STATE OF INDIANA PROFESSIONAL ENGINEER

DESIGN STANDARDS ENGINEER

DETAILS PLACED IN THIS FORMAT 11-15-99

/s/ Anthony L. Uremovich 11-15-99
DESIGN STANDARDS ENGINEER DATE

/s/ Firooz Zandi 11-15-99
CHIEF HIGHWAY ENGINEER DATE

ORIGINALLY APPROVED 9-01-98

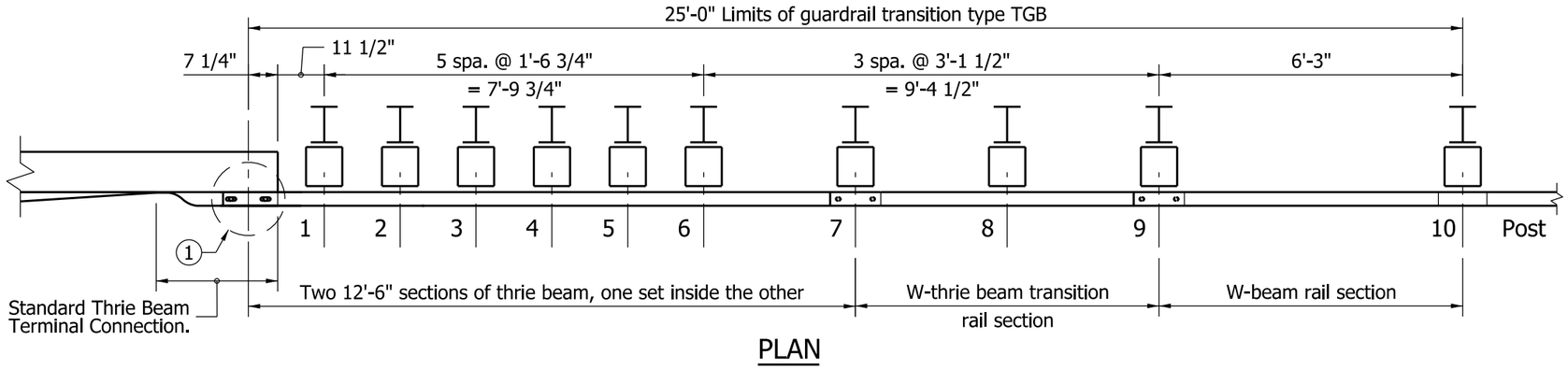

PLAN

NOTES:

1. See Standard Drawing E 601-TTGB-02 for Lap Detail.
2. See Standard Drawing E 601-TBGC-01 for connection details.
3. See Standard Drawings E 601-TTGB-03 through -05 for post and block details.

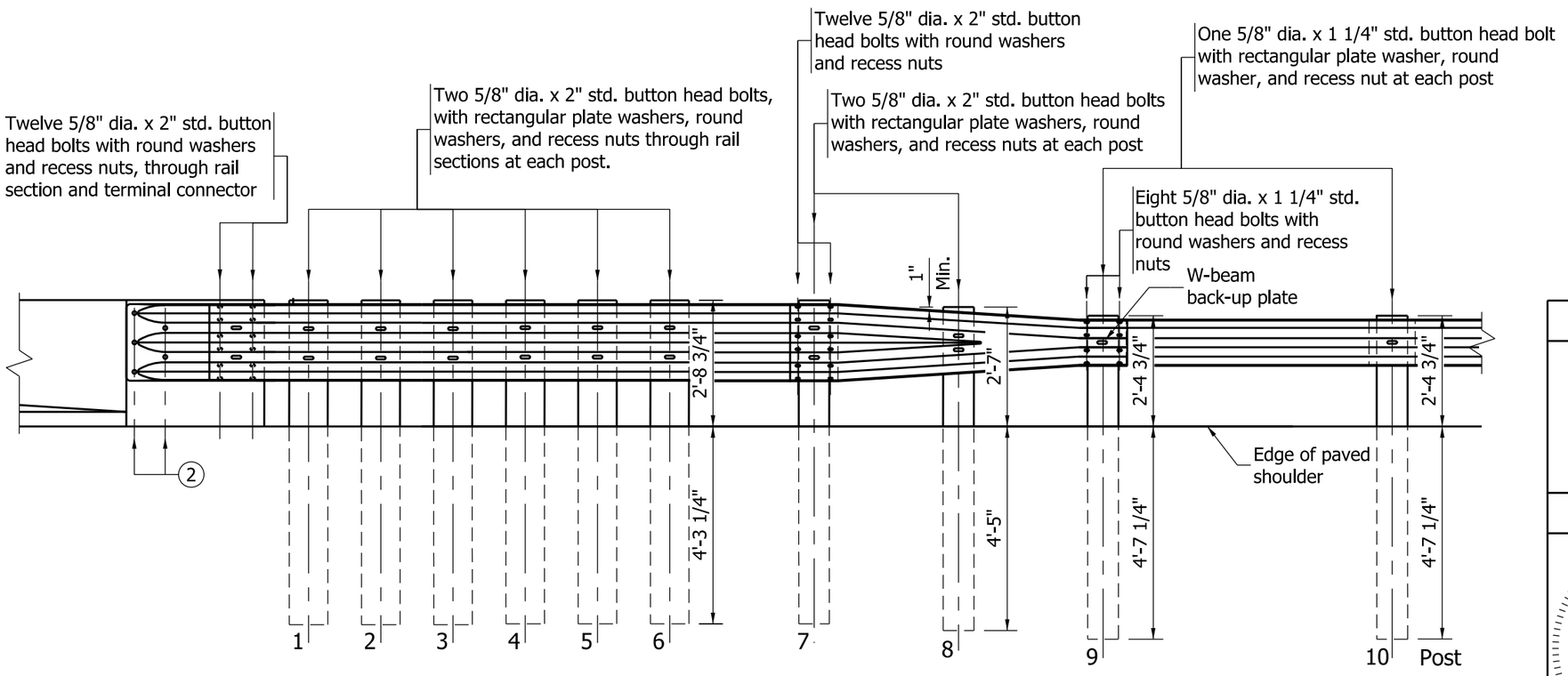

ELEVATION

INDIANA DEPARTMENT OF TRANSPORTATION

GUARDRAIL TRANSITION
TYPE TGB

SEPTEMBER 2011

STANDARD DRAWING NO. E 601-TTGB-01

RICHARD L. VanCLEAVE
REGISTERED
No. 9750
STATE OF INDIANA
PROFESSIONAL ENGINEER

DESIGN STANDARDS ENGINEER

/s/ Richard L. VanCleave 09/01/11
DESIGN STANDARDS ENGINEER DATE

/s/ Mark A. Miller 09/01/11
CHIEF HIGHWAY ENGINEER DATE

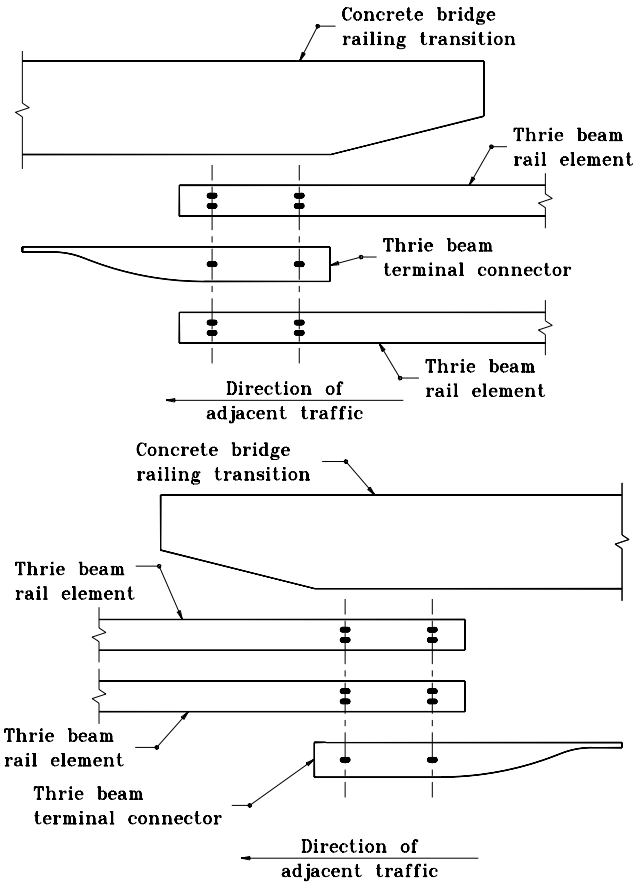

LAP DETAIL AT BRIDGE RAILING TRANSITION

INDIANA DEPARTMENT OF TRANSPORTATION

GUARDRAIL TRANSITION
TYPE TGB

MAY 2000

STANDARD DRAWING NO. **E 601-TTGB-02**

ANTHONY L. UREMOVICH REGISTERED No. 18095 STATE OF INDIANA PROFESSIONAL ENGINEER

DESIGN STANDARDS ENGINEER

/s/ Anthony L. Uremovich 5-01-00
DESIGN STANDARDS ENGINEER — DATE

/s/ Firooz Zandi 5-01-00
CHIEF HIGHWAY ENGINEER — DATE

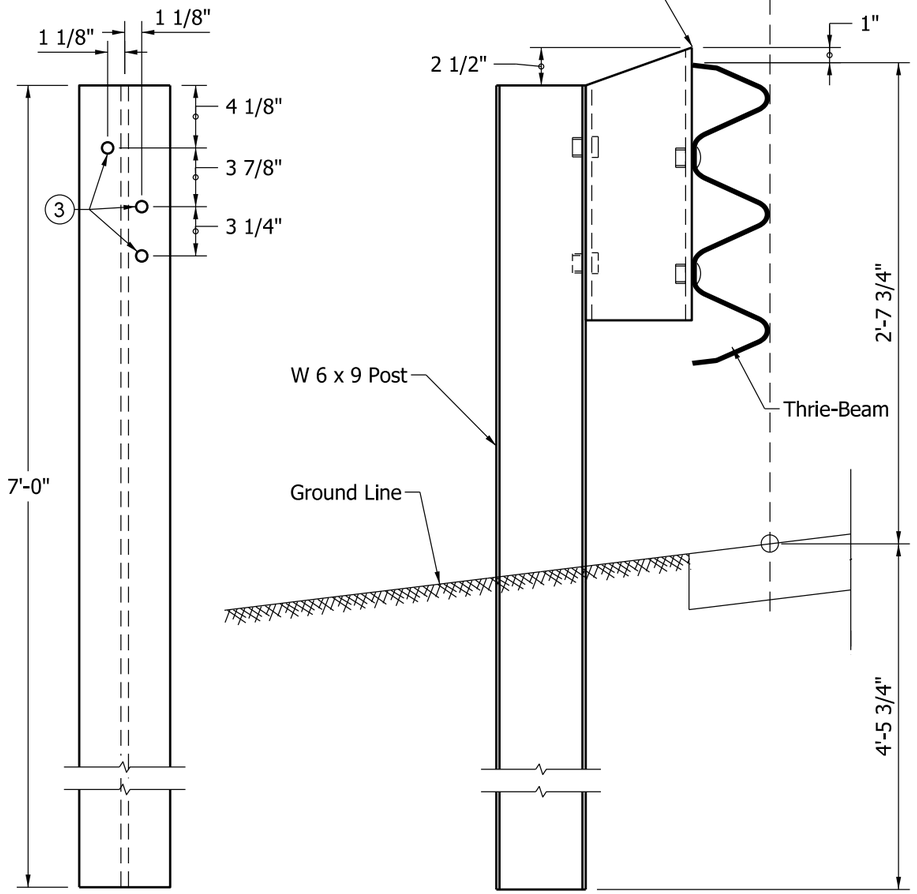

FRONT VIEW SIDE VIEW

W 6 x 9 POST DETAILS

NOTES:

1. All holes drilled or punched to 3/4" dia.
2. See Standard Drawing E 601-TTGB-01 for post numbers.
3. Hole pattern for posts numbers 8 through 10 may be drilled in back flange. See Standard drawing E 601-TTGB-04 or E 601-TTGB-05.

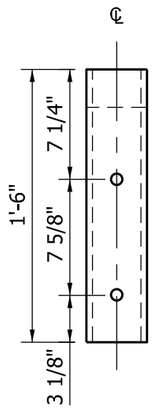

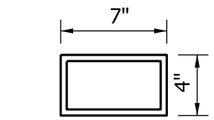

TOP VIEW

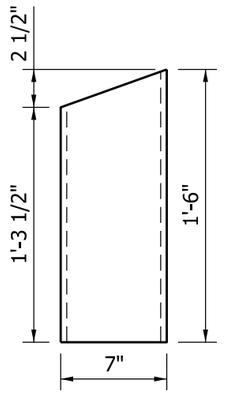

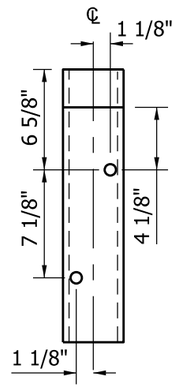

FRONT VIEW SIDE VIEW BACK VIEW

TS 7 x 4 x 3/16" BLOCK DETAILS

POSTS 1 THROUGH 7

INDIANA DEPARTMENT OF TRANSPORTATION

GUARDRAIL TRANSITION
TYPE TGB

SEPTEMBER 2011

STANDARD DRAWING NO. E 601-TTGB-03

RICHARD L. VanCLEAVE REGISTERED No. 9750 STATE OF INDIANA PROFESSIONAL ENGINEER

DESIGN STANDARDS ENGINEER

/s/ Richard L. VanCleave 09/01/11
DESIGN STANDARDS ENGINEER DATE

/s/ Mark A. Miller 09/01/11
CHIEF HIGHWAY ENGINEER DATE

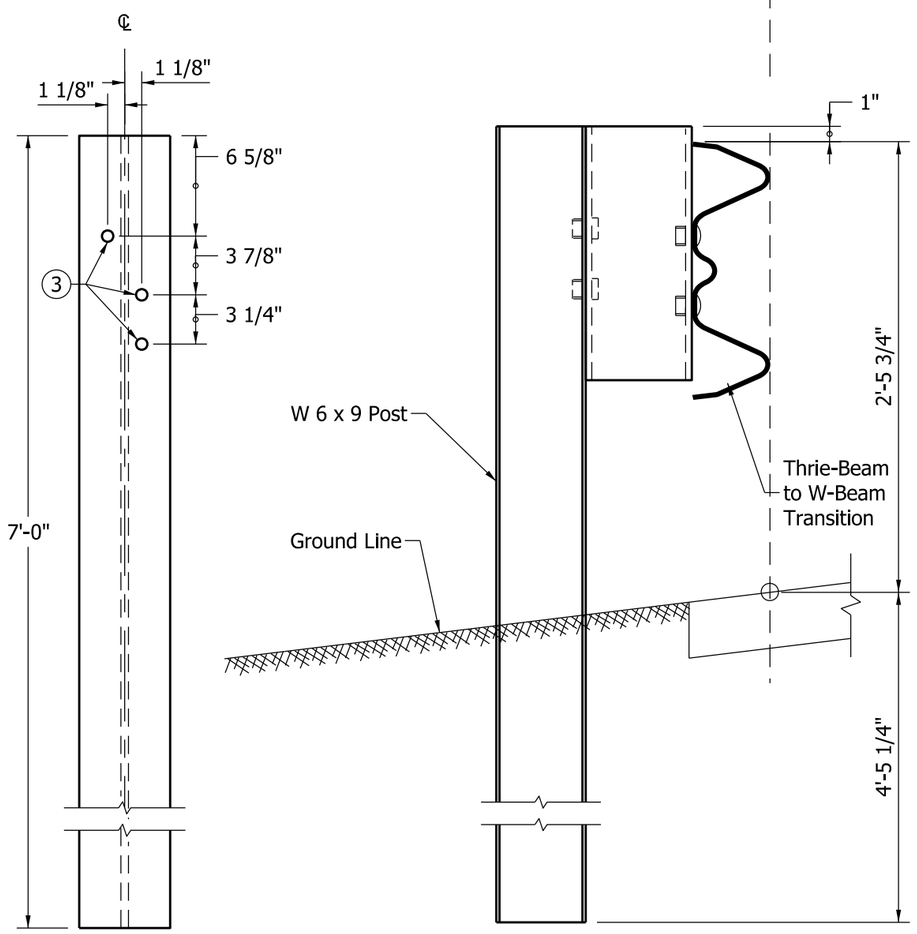

FRONT VIEW SIDE VIEW

W 6 x 9 POST DETAILS

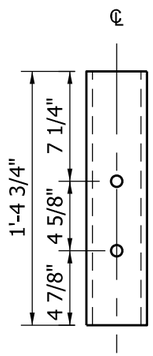

FRONT VIEW

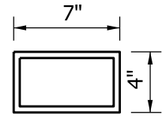

TOP VIEW

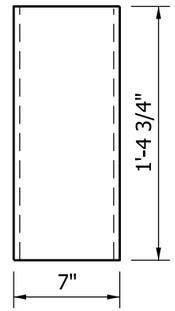

SIDE VIEW

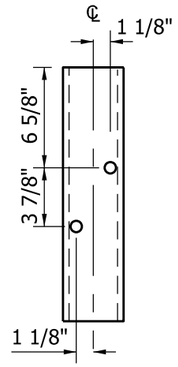

BACK VIEW

NOTES:

1. All holes drilled or punched to 3/4" dia.
2. See Standard Drawing E 601-TTGB-01 for post numbers.
3. Hole pattern for posts numbers 1 through 7 may be drilled in back flange. See Standard drawing E 601-TTGB-03.

TS 7 x 4 x 3/16" BLOCK DETAILS

POST 8

INDIANA DEPARTMENT OF TRANSPORTATION

GUARDRAIL TRANSITION
TYPE TGB

SEPTEMBER 2011

STANDARD DRAWING NO. E 601-TTGB-04

RICHARD L. VanCLEAVE
REGISTERED
No. 9750
STATE OF INDIANA
PROFESSIONAL ENGINEER

DESIGN STANDARDS ENGINEER

/s/ Richard L. VanCleave 09/01/11
DESIGN STANDARDS ENGINEER DATE

/s/ Mark A. Miller 09/01/11
CHIEF HIGHWAY ENGINEER DATE

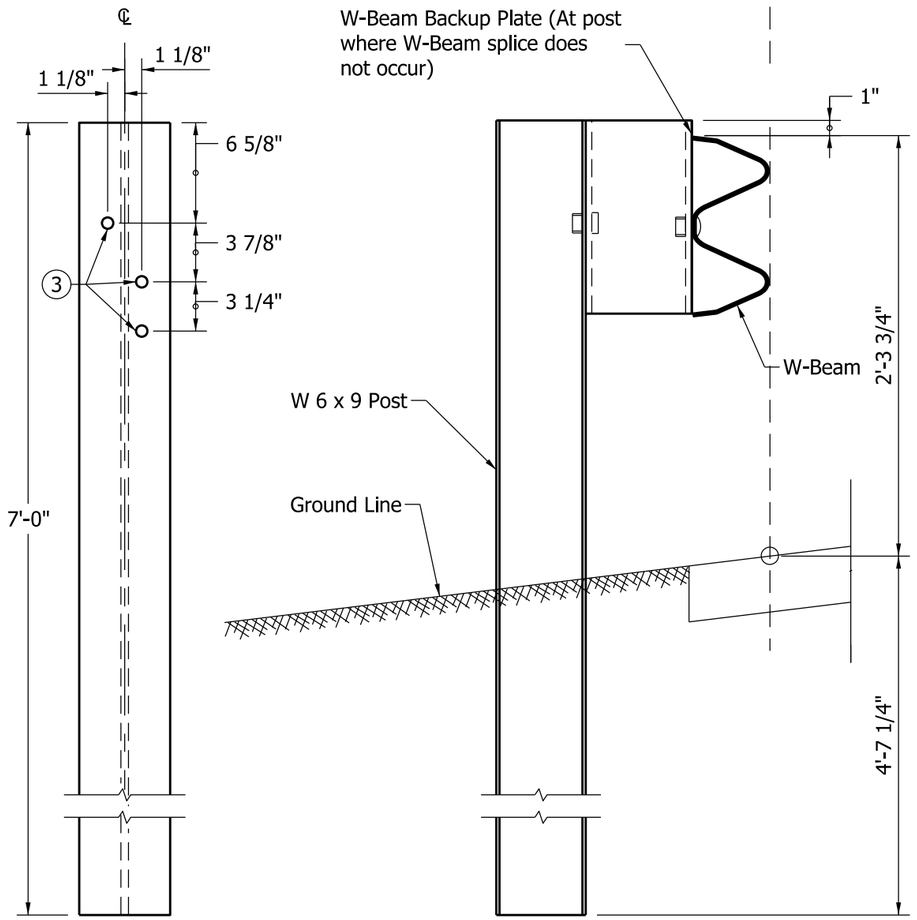

FRONT VIEW SIDE VIEW

W 6 x 9 POST DETAILS

NOTES:

1. All holes drilled or punched to 3/4" dia.
2. See Standard Drawing E 601-TTGB-01 for post numbers.
3. Hole pattern for posts numbers 1 through 7 may be drilled in back flange. See Standard drawing E 601-TTGB-03.

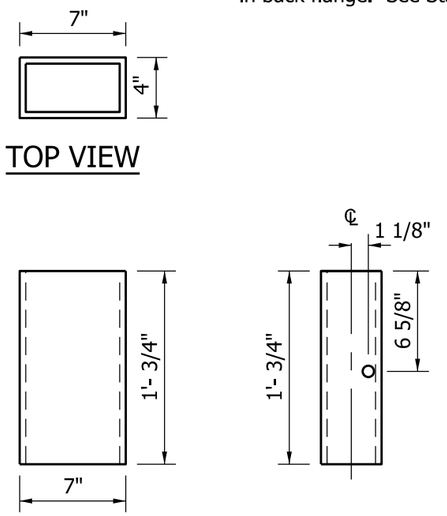

TOP VIEW

FRONT VIEW SIDE VIEW BACK VIEW

TS 7 x 4 x 3/16" BLOCK DETAILS
POSTS 9 and 10

INDIANA DEPARTMENT OF TRANSPORTATION

GUARDRAIL TRANSITION
TYPE TGB

SEPTEMBER 2011

STANDARD DRAWING NO. E 601-TTGB-05

RICHARD L. VanCLEAVE REGISTERED No. 9750 STATE OF INDIANA PROFESSIONAL ENGINEER

DESIGN STANDARDS ENGINEER

/s/ Richard L. VanCleave 09/01/11
DESIGN STANDARDS ENGINEER DATE

/s/ Mark A. Miller 09/01/11
CHIEF HIGHWAY ENGINEER DATE

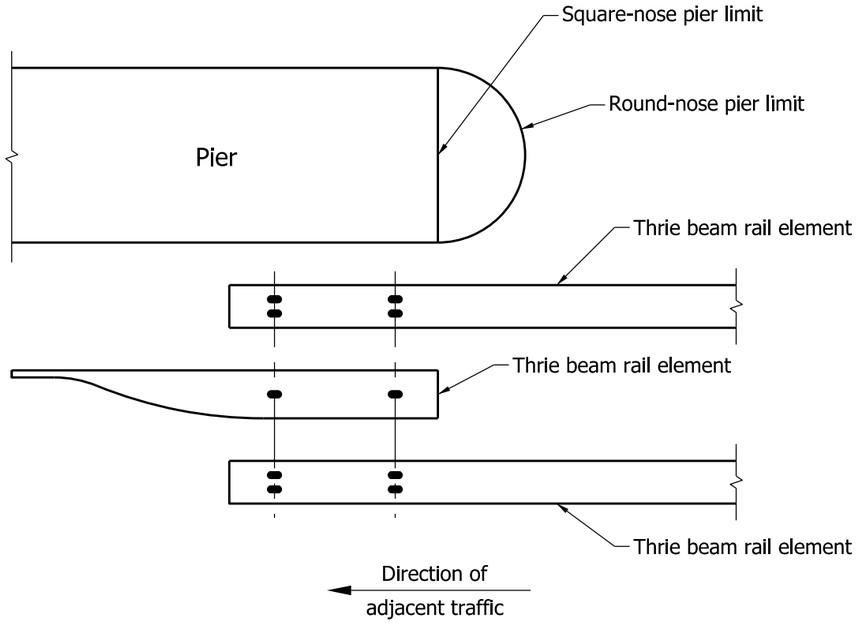

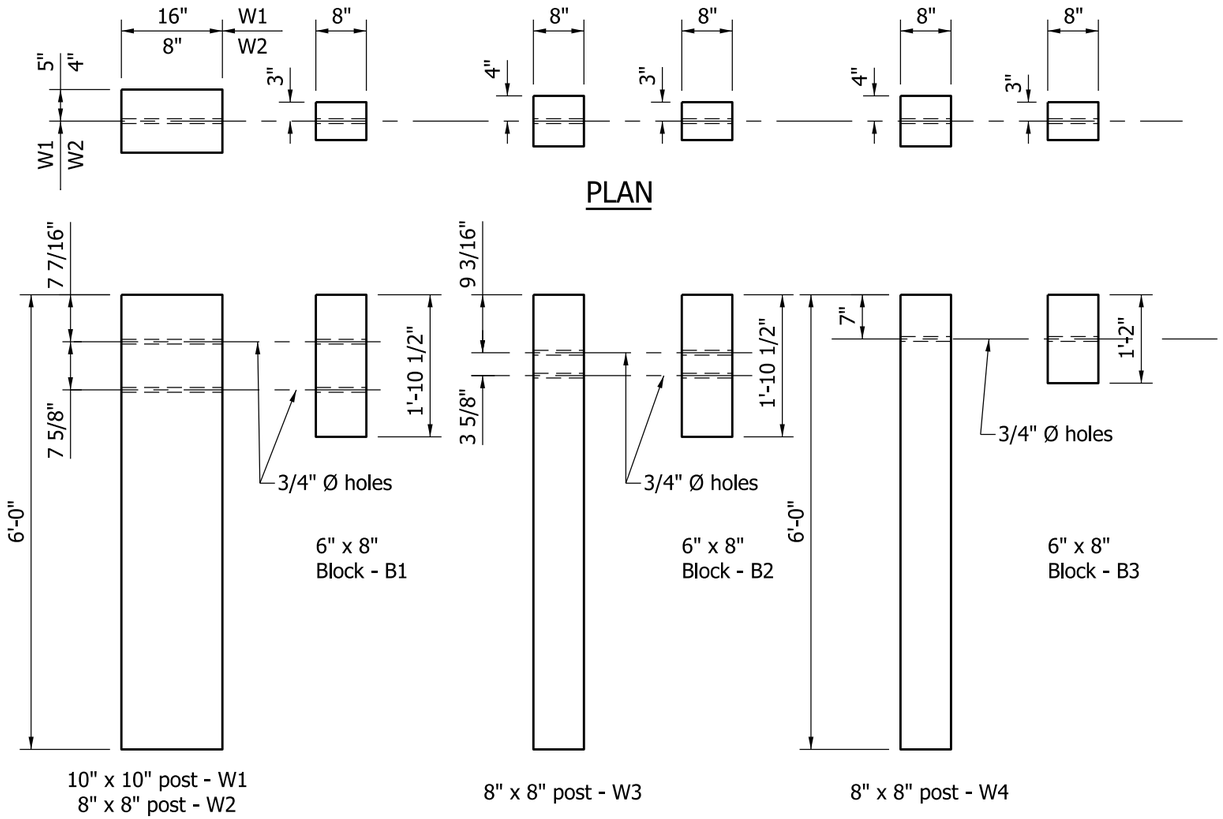

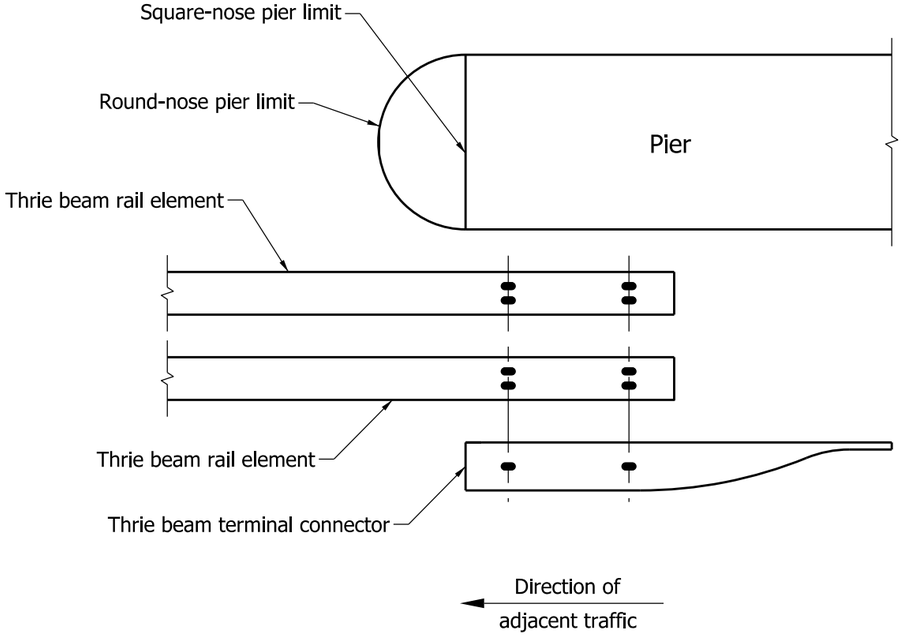

LAP DETAIL AT PIER CONNECTION

INDIANA DEPARTMENT OF TRANSPORTATION

GUARDRAIL TRANSITION
TYPE GP

SEPTEMBER 2011

STANDARD DRAWING NO. E 601-TTGP-01

RICHARD L. VanCLEAVE
REGISTERED
No. 9750
STATE OF INDIANA
PROFESSIONAL ENGINEER

DESIGN STANDARDS ENGINEER

/s/ Richard L. VanCleave 09/01/11
DESIGN STANDARDS ENGINEER DATE

/s/ Mark A. Miller 09/01/11
CHIEF HIGHWAY ENGINEER DATE

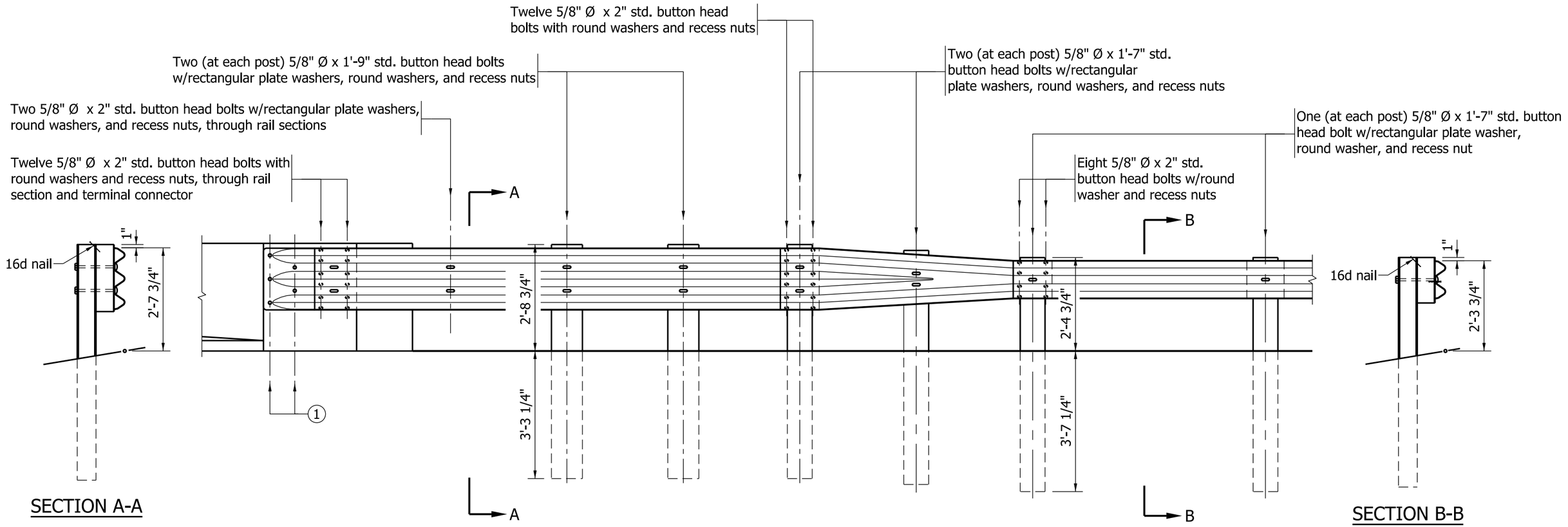

NOTE:

(1) See pier connection details for connection of terminal connector. See Standard Drawing E 601-TTGP-01 (use proper end detail).

INDIANA DEPARTMENT OF TRANSPORTATION

GUARDRAIL TRANSITION
TYPE GP

SEPTEMBER 2011

STANDARD DRAWING NO. E 601-TTGP-02

RICHARD L. VanCLEAVE REGISTERED No. 9750 STATE OF INDIANA PROFESSIONAL ENGINEER

DESIGN STANDARDS ENGINEER

/s/ Richard L. VanCleave 09/01/11
DESIGN STANDARDS ENGINEER DATE

/s/ Mark A. Miller 09/01/11
CHIEF HIGHWAY ENGINEER DATE

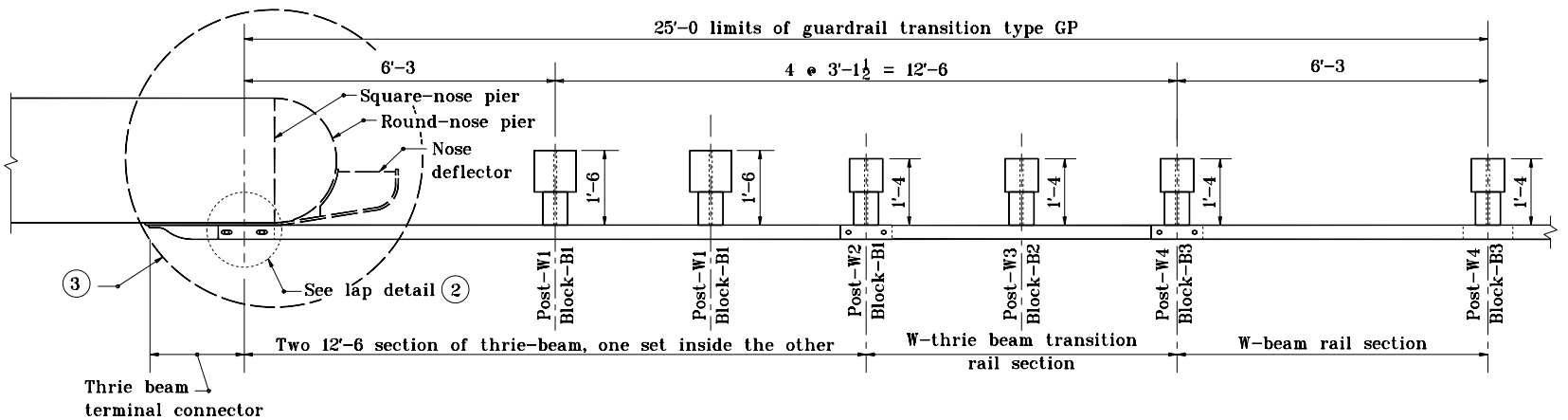

PLAN

NOTES:

1. This drawing shall be used where guardrail transition type GP is specified to connect W-beam guardrail to a pier or frame bent collision wall.

2. See Standard Drawing E 601-TTGP-01 for lap detail at pier connection.

3. See Standard Drawings E 601-TPGP-01 and -02 for nose deflector details.

INDIANA DEPARTMENT OF TRANSPORTATION

GUARDRAIL TRANSITION TYPE GP

APRIL 1996

STANDARD DRAWING NO. **E 601-TTGP-03**

ANTHONY L. UREMOVICH REGISTERED No. 18095 STATE OF INDIANA PROFESSIONAL ENGINEER

DESIGN STANDARDS ENGINEER

DETAILS PLACED IN THIS FORMAT	11-15-99
/s/ Anthony L. Uremovich, DESIGN STANDARDS ENGINEER	11-15-99
/s/ Firooz Zandi, CHIEF HIGHWAY ENGINEER	11-15-99
ORIGINALLY APPROVED	4-01-96

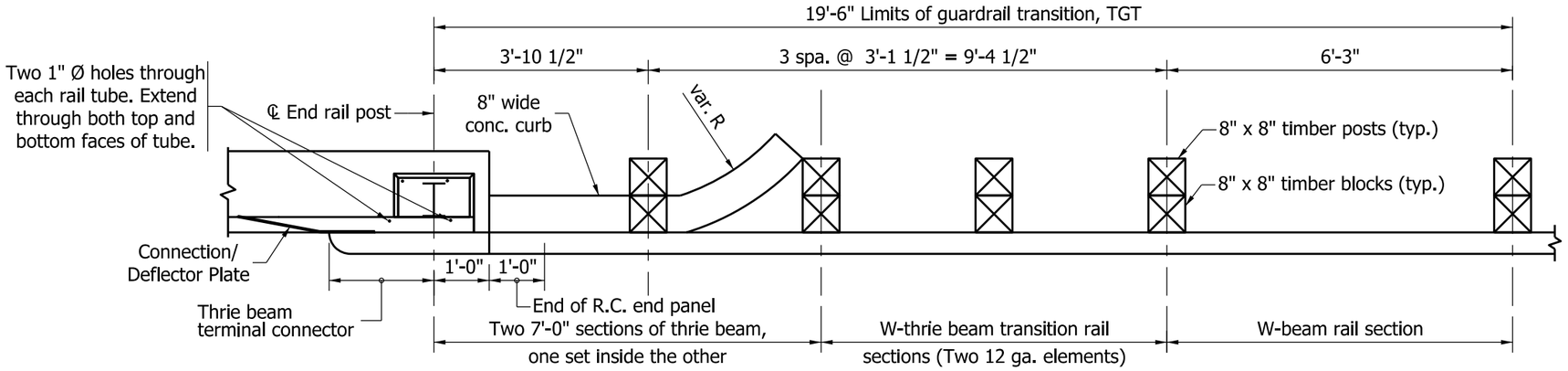

PLAN

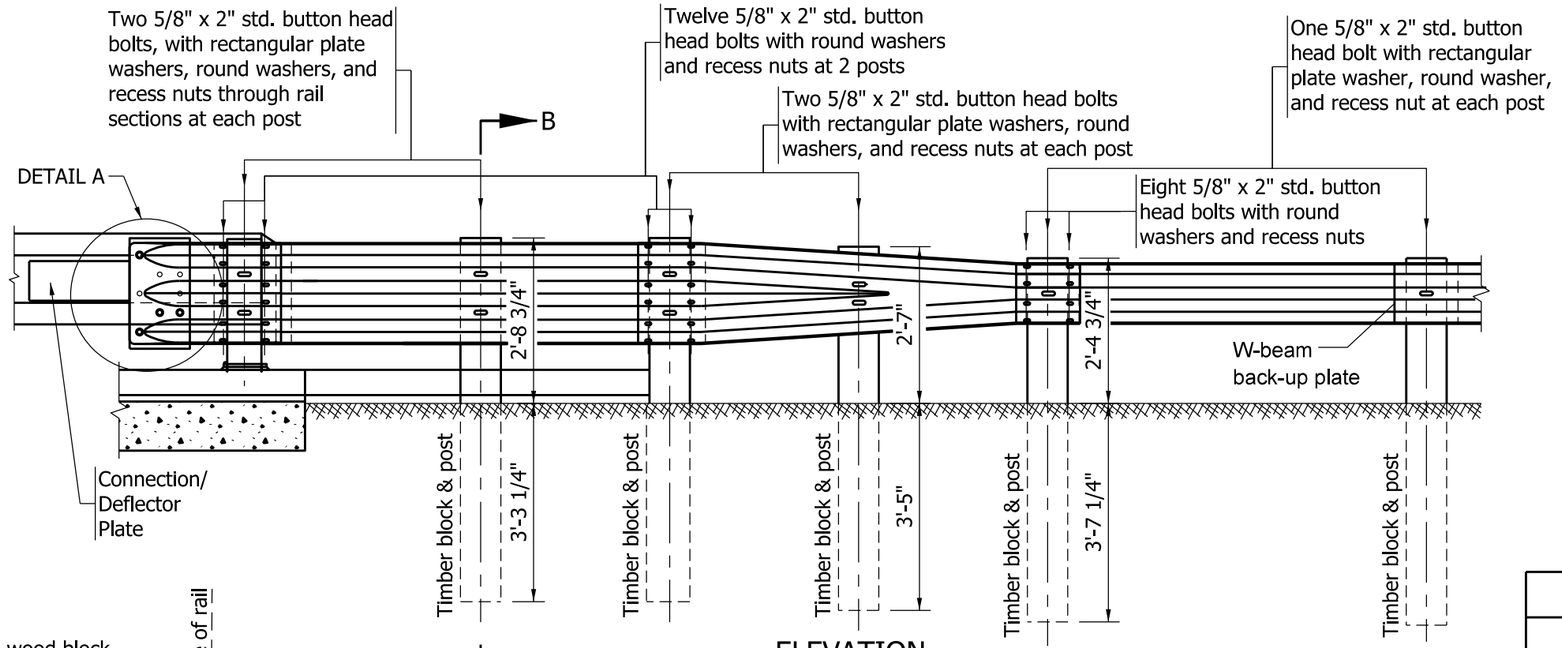

ELEVATION

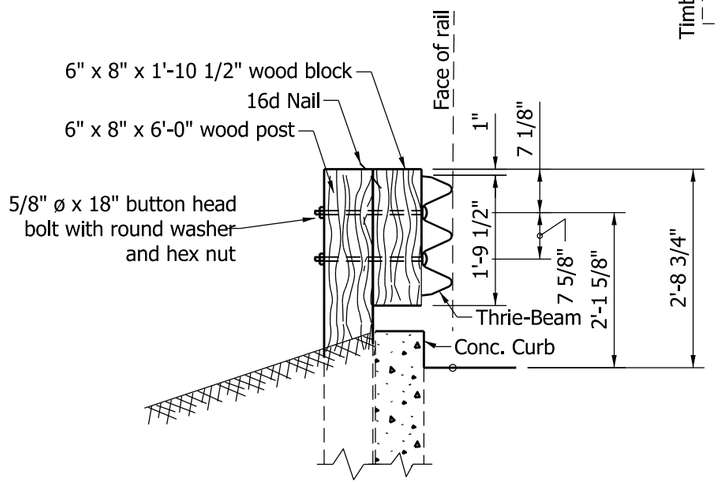

SECTION B-B

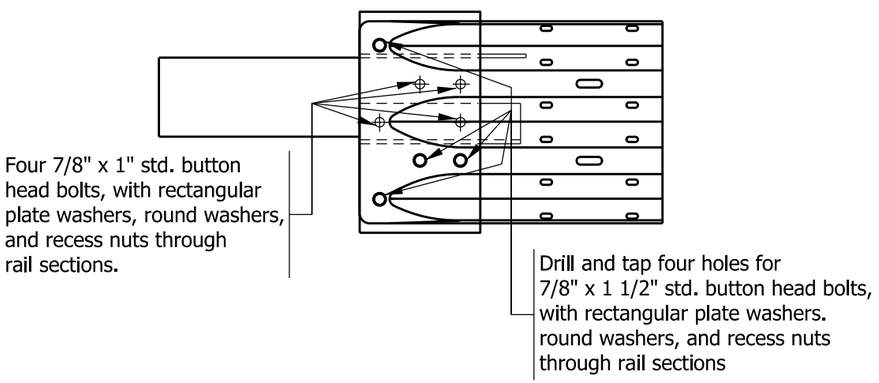

DETAIL A

NOTES:

1. See Standard Drawing E 601-TBGC-01 and E 601-TBGC-02 for thrie-beam transition details.
2. See Standard Drawing E 601-TTGT-02 for transition connection detail, timber post detail and timber block detail.

INDIANA DEPARTMENT OF TRANSPORTATION

GUARDRAIL TRANSITION, TGT

SEPTEMBER 2011

STANDARD DRAWING NO. E 601-TTGT-01

RICHARD L. VanCLEAVE REGISTERED No. 9750 STATE OF INDIANA PROFESSIONAL ENGINEER

DESIGN STANDARDS ENGINEER

/s/ Richard L. VanCleave 09/01/11
DESIGN STANDARDS ENGINEER DATE

/s/ Mark A. Miller 09/01/11
CHIEF HIGHWAY ENGINEER DATE

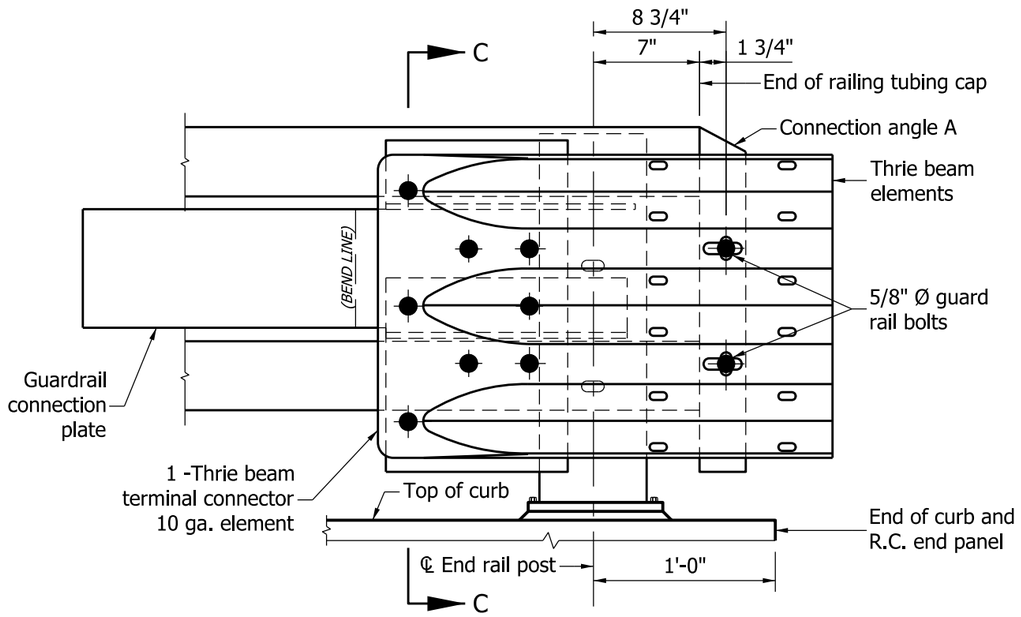

ELEVATION - TRANSITION CONNECTION

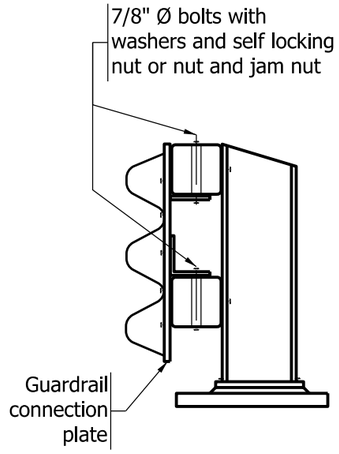

SECTION C-C

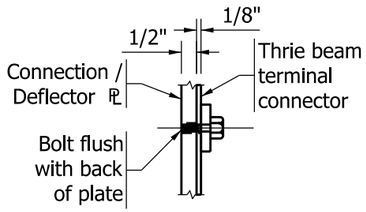

DETAIL A

NOTE:

1. See Standard Drawing E 706-BRTM-02 for railing tubing cap details.

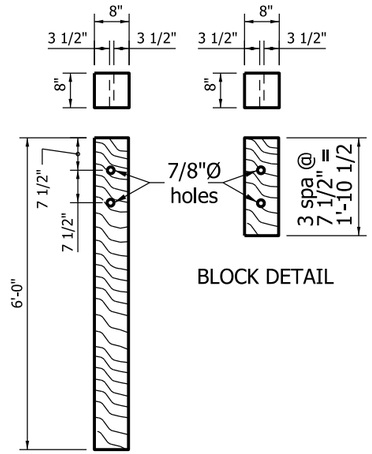

TIMBER POST DETAIL FOR THRIE-BEAM GUARDRAIL CONNECTION

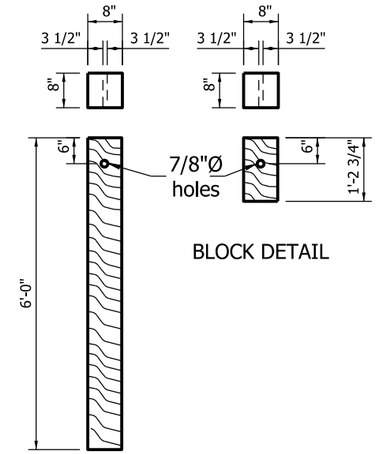

TIMBER POST DETAIL FOR W-BEAM GUARDRAIL CONNECTION

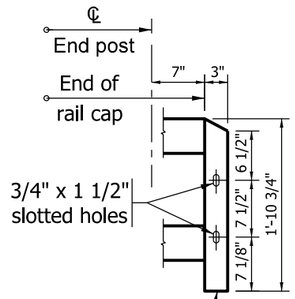

CONNECTION ANGLE A

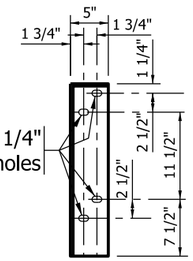

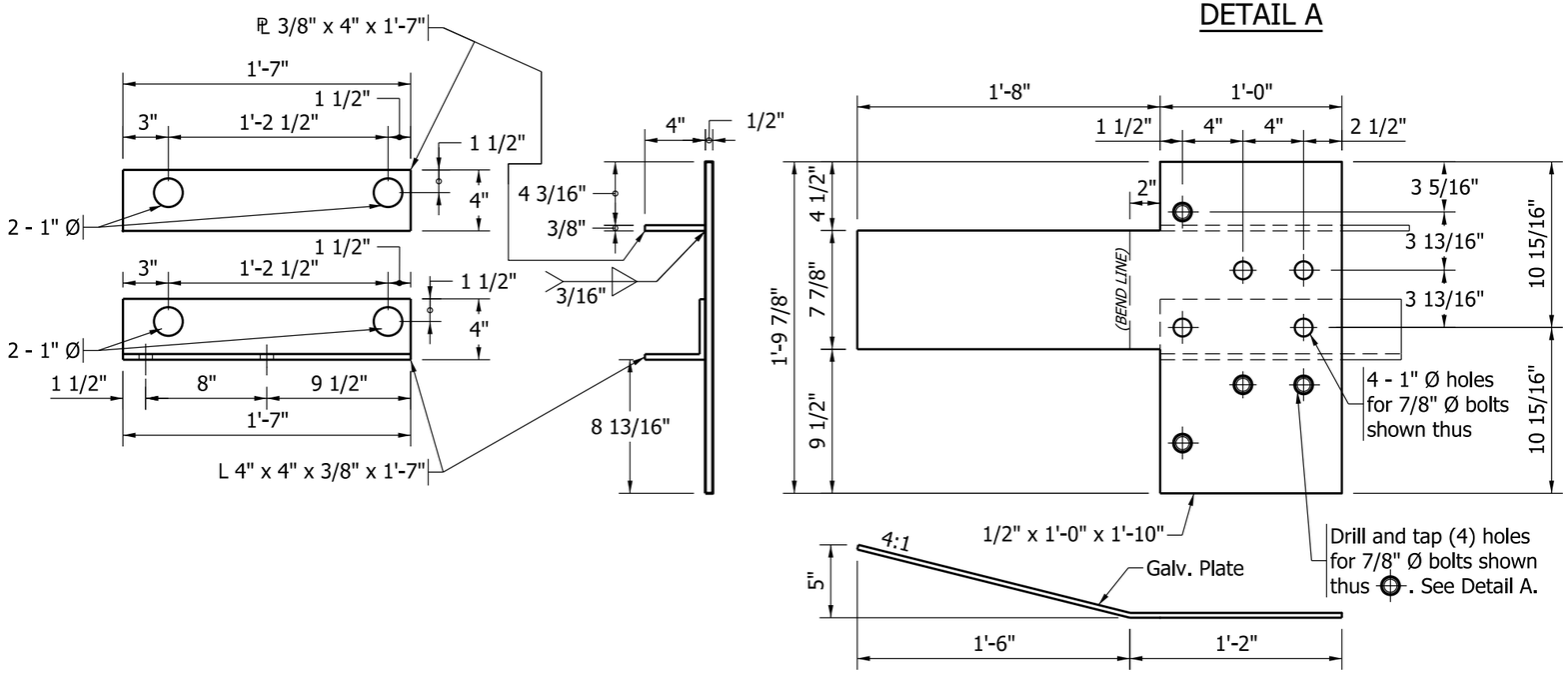

GUARDRAIL CONNECTION / DEFLECTOR PLATE DETAILS

INDIANA DEPARTMENT OF TRANSPORTATION

GUARDRAIL TRANSITION, TGT

SEPTEMBER 2011

STANDARD DRAWING NO. E 601-TTGT-02

RICHARD L. VanCLEAVE REGISTERED No. 9750 STATE OF INDIANA PROFESSIONAL ENGINEER

DESIGN STANDARDS ENGINEER

/s/ Richard L. VanCleave 09/01/11
DESIGN STANDARDS ENGINEER DATE

/s/ Mark A. Miller 09/01/11
CHIEF HIGHWAY ENGINEER DATE

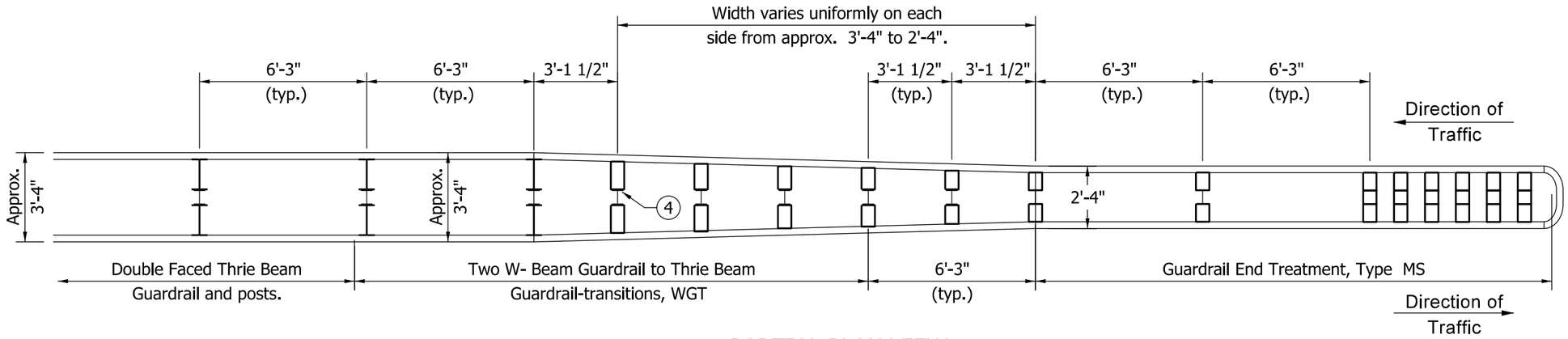

PARTIAL PLAN VIEW

Post	Blockouts
1	W-Beam
2	9" x 6"
3	10" x 6"
4	11" x 6"
5	12" x 6"
6	13" x 6"
7	W 14 x 22
8	W 14 x 22

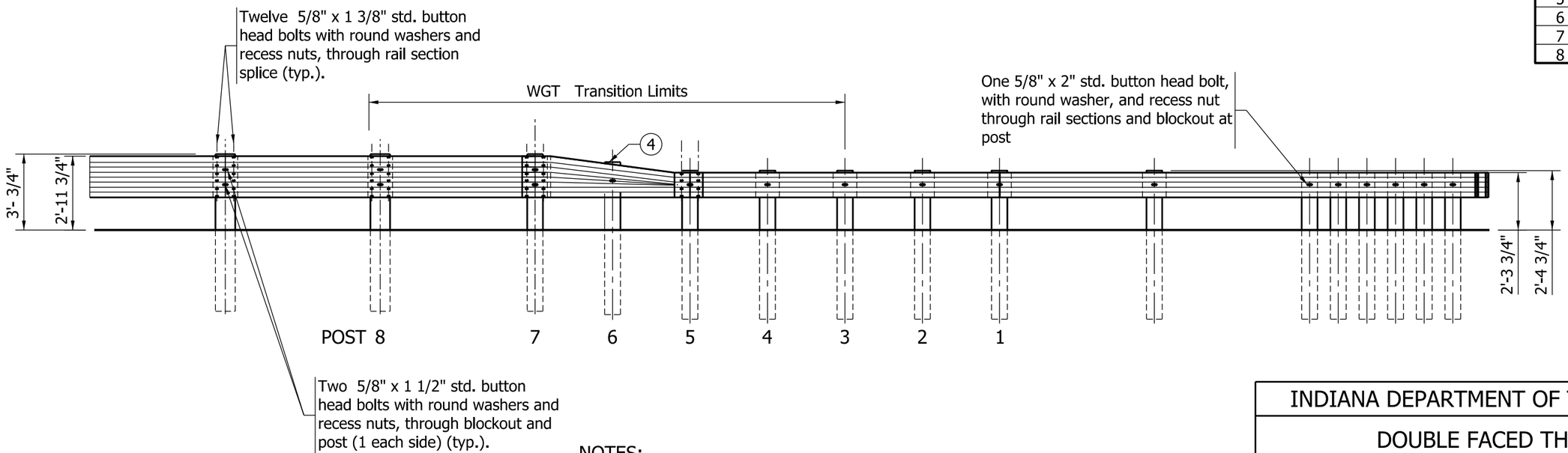

LEGEND:

- I - W 6 x 9 Post
- I - W 14 x 22 Blockout
- □ - Approved W-Beam Blockout

NOTES:

1. See Standard Drawing E 601-MTGR-01 for Thrie Beam Guardrail details.
2. See Standard Drawing E 601-TWGT-01 for Guardrail Transition WGT details.
3. See Standard Drawings E 601-WBGA-01 through -03 and E 601-WBGC-01 through -03 for W- Beam Guardrail details.

(4) At post 6 on the thrie beam guardrail transition to W-Beam guardrail, the maximum post exposure above the top of the transition rail shall be limited to 1".

INDIANA DEPARTMENT OF TRANSPORTATION

DOUBLE FACED THRIE BEAM GUARDRAIL TRANSITION TO GRET TYPE MS

SEPTEMBER 2011

STANDARD DRAWING NO. E 601-TTMS-01

RICHARD L. VanCLEAVE REGISTERED No. 9750 STATE OF INDIANA PROFESSIONAL ENGINEER

DESIGN STANDARDS ENGINEER

/s/ Richard L. VanCleave 09/01/11
DESIGN STANDARDS ENGINEER DATE

/s/ Mark A. Miller 09/01/11
CHIEF HIGHWAY ENGINEER DATE

NOTES:

1. If rub-rail is not spliced at post, the channel shall be cut and repositioned behind the flange.
2. If rub-rail is spliced at post, the splice material shall be removed and the channel shall be repositioned behind the flange.

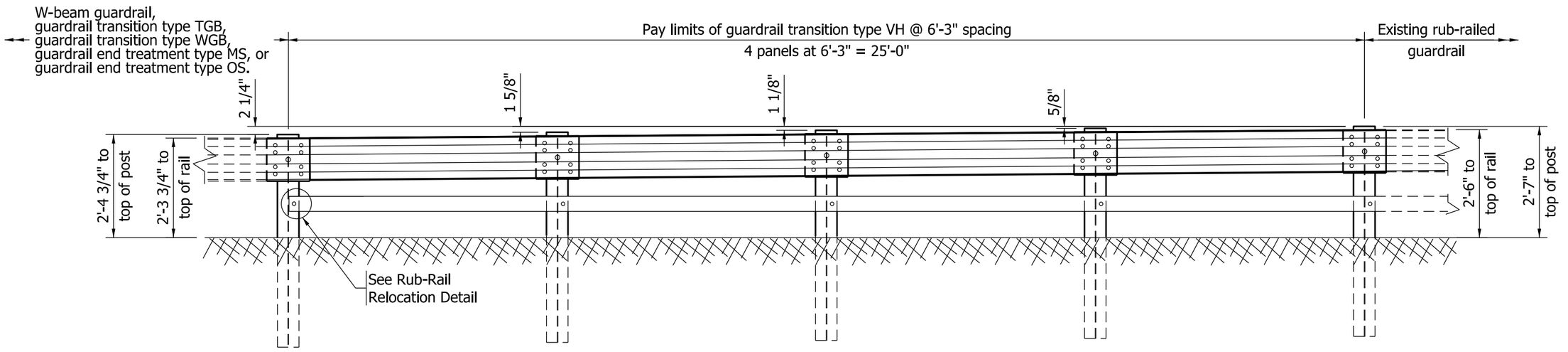

ELEVATION
GUARDRAIL TRANSITION TYPE VH AT 6'-3" POST SPACING

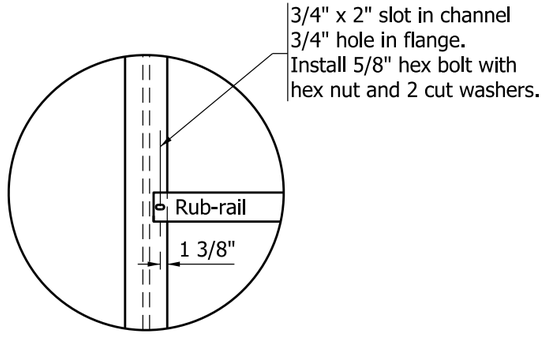

RUB-RAIL RELOCATION DETAIL

INDIANA DEPARTMENT OF TRANSPORTATION

GUARDRAIL TRANSITION
TYPE VH

SEPTEMBER 2011

STANDARD DRAWING NO. E 601-TTVH-01

RICHARD L. VanCLEAVE REGISTERED No. 9750 STATE OF INDIANA PROFESSIONAL ENGINEER

DESIGN STANDARDS ENGINEER

/s/ Richard L. VanCleave 09/01/11
DESIGN STANDARDS ENGINEER DATE

/s/ Mark A. Miller 09/01/11
CHIEF HIGHWAY ENGINEER DATE

NOTES:

1. If rub-rail is not spliced at post, the channel shall be cut and repositioned behind the flange.
2. If rub-rail is spliced at post, the splice material shall be removed and the channel shall be repositioned behind the flange.

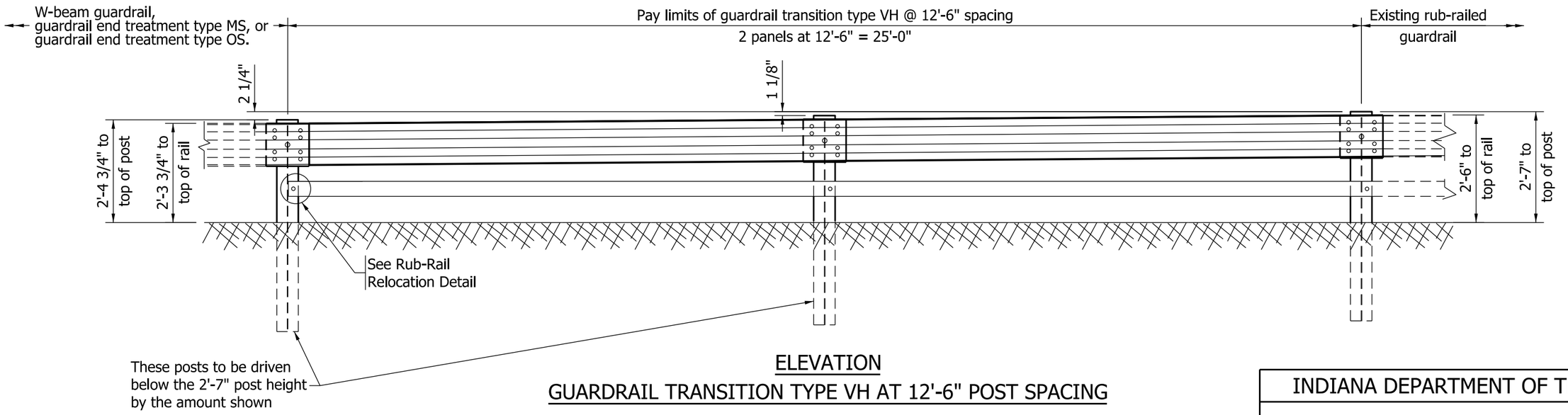

ELEVATION

GUARDRAIL TRANSITION TYPE VH AT 12'-6" POST SPACING

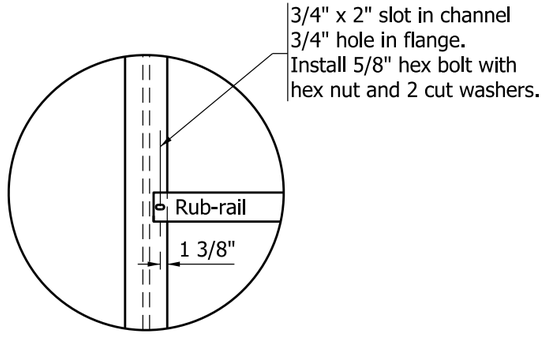

RUB-RAIL RELOCATION DETAIL

INDIANA DEPARTMENT OF TRANSPORTATION

GUARDRAIL TRANSITION
TYPE VH

SEPTEMBER 2011

STANDARD DRAWING NO. E 601-TTVH-02

RICHARD L. VanCLEAVE REGISTERED No. 9750 STATE OF INDIANA PROFESSIONAL ENGINEER

DESIGN STANDARDS ENGINEER

/s/ Richard L. VanCleave 09/01/11
DESIGN STANDARDS ENGINEER DATE

/s/ Mark A. Miller 09/01/11
CHIEF HIGHWAY ENGINEER DATE

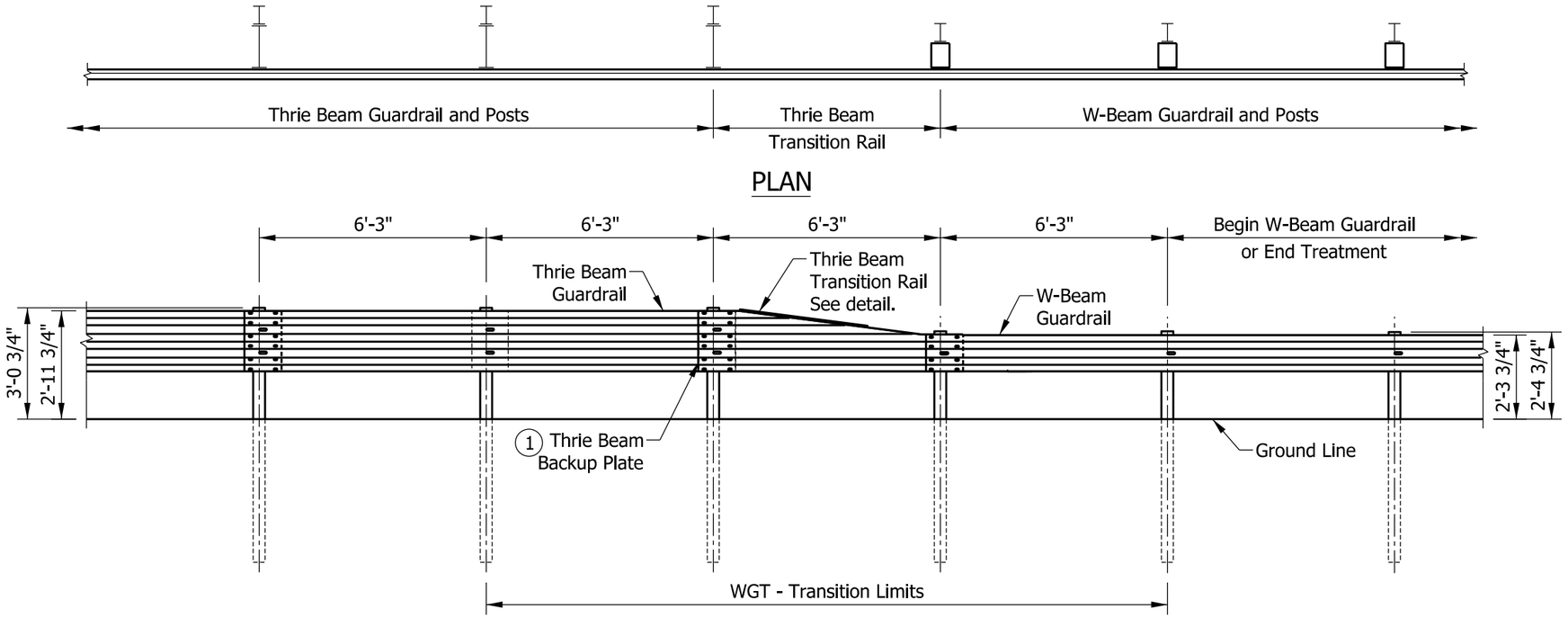

PLAN

ELEVATION
THRIE BEAM TO W-BEAM GUARDRAIL TRANSITION

NOTES:

1. See Standard Drawing E 601-MTGR-01 for Thrie Beam Guardrail details. Thrie beam backup plate required at posts where there is no thrie-beam splice and at other locations as shown.
2. See Standard Drawing E 601-WBGC-01 for W-Beam Guardrail Components.
3. See Standard Drawings E 601-WBGA-01 through -03 for W-Beam Guardrail Assembly details.
4. Slope on thrie beam transition shall be reversed where thrie beam to W-beam guardrail relative orientation is opposite to that shown hereon.
5. See Standard Drawing Series E 601-TBGC for Thrie Beam Rail Section.

LEGEND:

- I - W 6 x 9 Post
- I - W 14 x 22 Blockout
- □ - Timber or Composite W-Beam Blockout

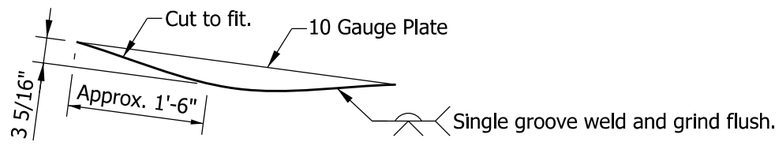

CAP PLATE PLAN

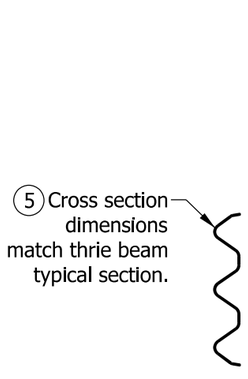

SECTION A-A

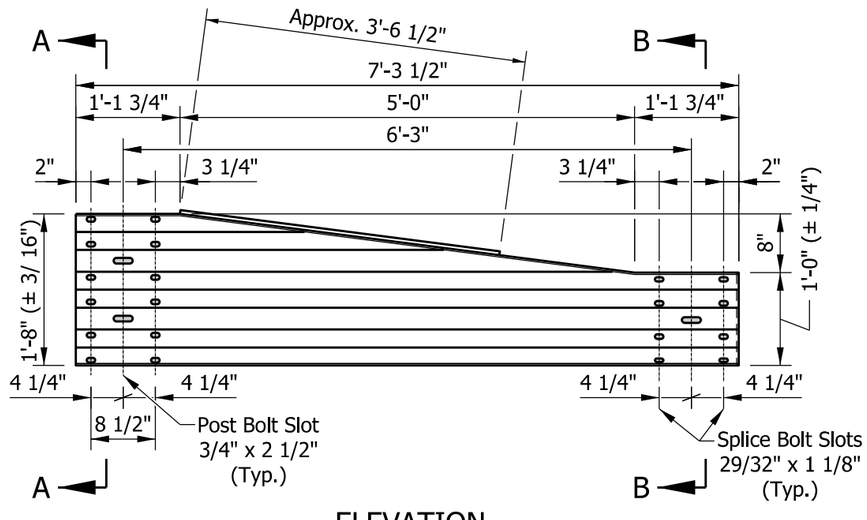

ELEVATION
THRIE BEAM TRANSITION RAIL

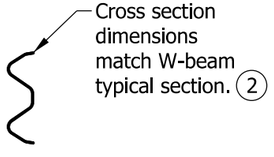

SECTION B-B

INDIANA DEPARTMENT OF TRANSPORTATION

W-BEAM GUARDRAIL TO
THRIE BEAM GUARDRAIL
TRANSITION, WGT

SEPTEMBER 2014

STANDARD DRAWING NO. E 601-TWGT-01

RICHARD L. VanCLEAVE
REGISTERED
No. 9750
STATE OF INDIANA
PROFESSIONAL ENGINEER

/s/ Richard L. VanCleave 02/20/14
DESIGN STANDARDS ENGINEER DATE

/s/ Mark A. Miller 03/03/14
CHIEF ENGINEER DATE

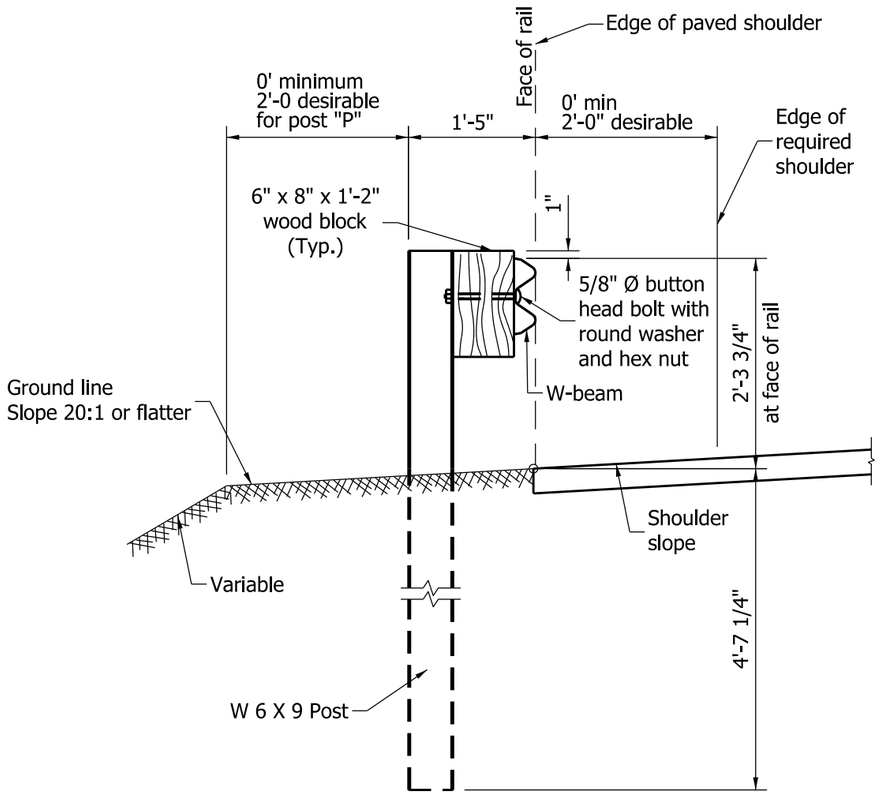

TYPICAL W-BEAM INSTALLATION

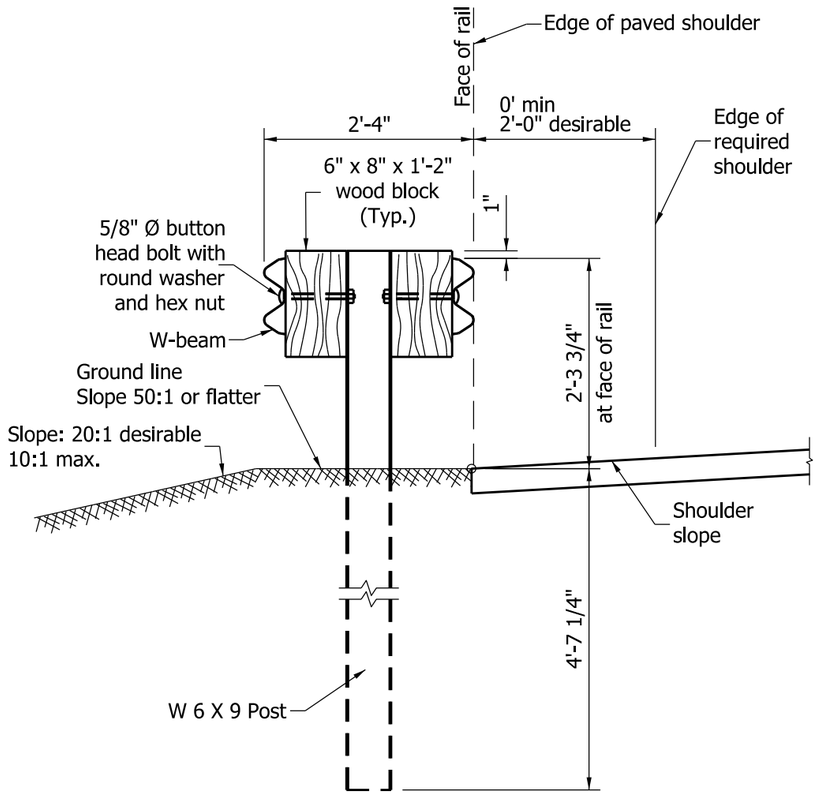

TYPICAL DOUBLE FACED W-BEAM INSTALLATION

INDIANA DEPARTMENT OF TRANSPORTATION

W-BEAM
GUARDRAIL ASSEMBLIES

SEPTEMBER 2011

STANDARD DRAWING NO. E 601-WBGA-01

RICHARD L. VanCLEAVE
REGISTERED
No. 9750
STATE OF INDIANA
PROFESSIONAL ENGINEER

DESIGN STANDARDS ENGINEER

/s/ Richard L. VanCleave *09/01/11*
DESIGN STANDARDS ENGINEER DATE

/s/ Mark A. Miller *09/01/11*
CHIEF HIGHWAY ENGINEER DATE

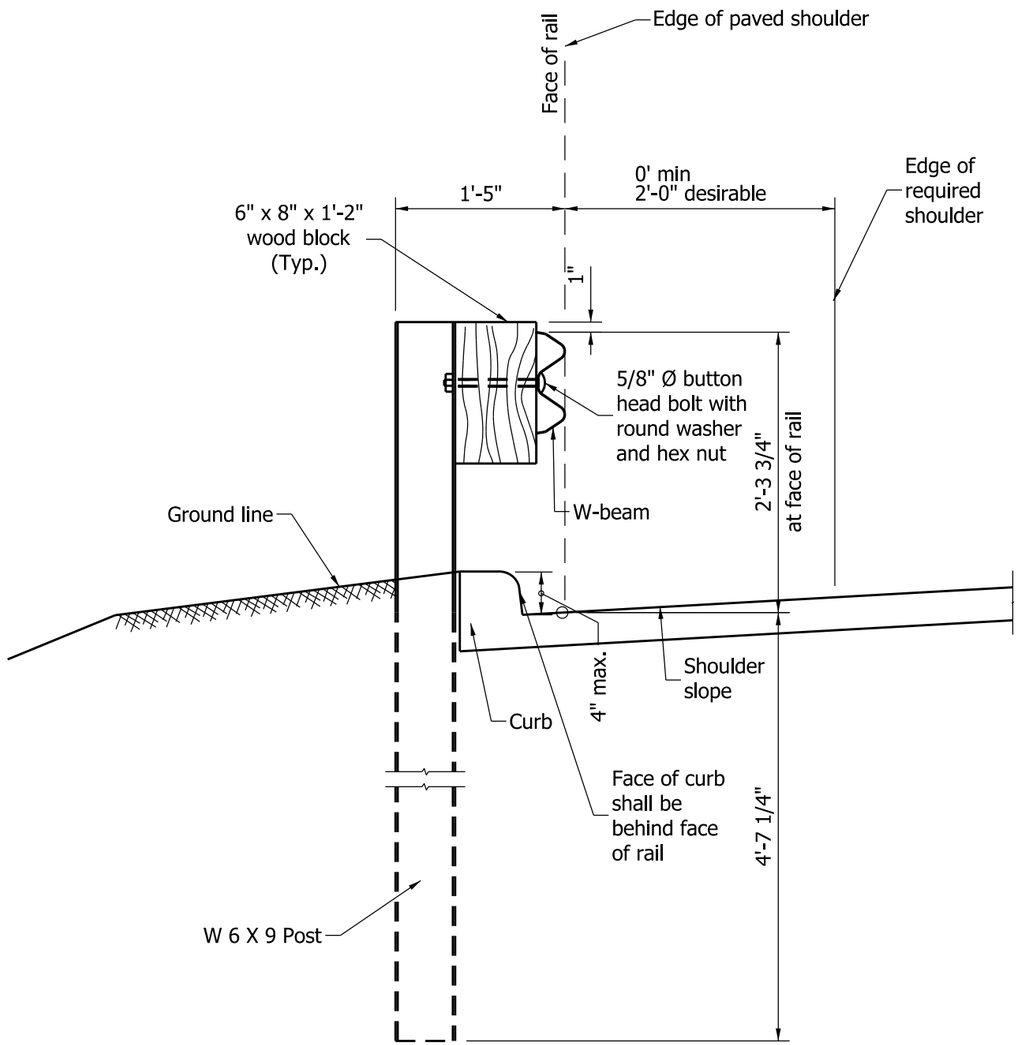

TYPICAL W-BEAM INSTALLATION AT CURB

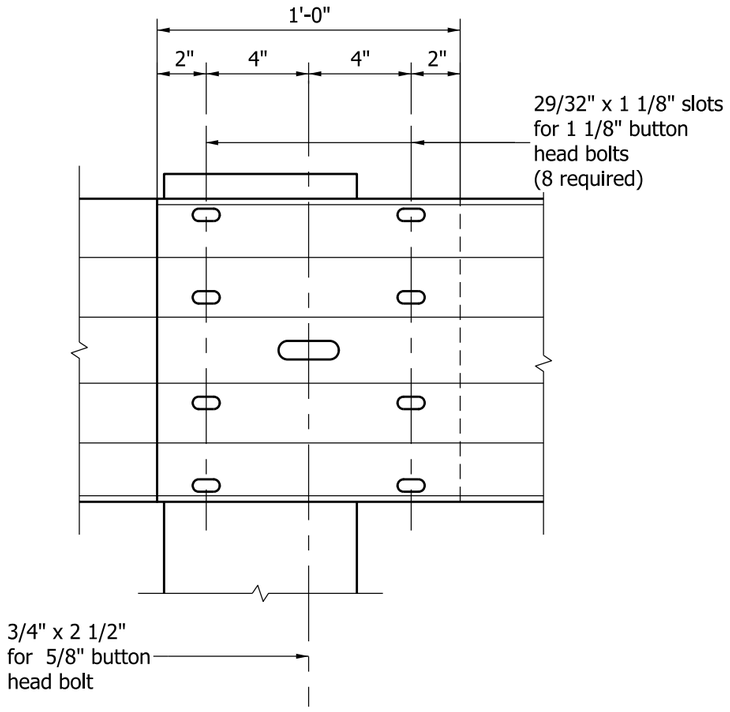

STEEL W-BEAM SPLICE DETAIL

INDIANA DEPARTMENT OF TRANSPORTATION

W-BEAM GUARDRAIL ASSEMBLIES

SEPTEMBER 2011

STANDARD DRAWING NO. E 601-WBGA-02

RICHARD L. VanCLEAVE
REGISTERED
No. 9750
STATE OF INDIANA
PROFESSIONAL ENGINEER

DESIGN STANDARDS ENGINEER

/s/ Richard L. VanCleave 09/01/11
DESIGN STANDARDS ENGINEER DATE

/s/ Mark A. Miller 09/01/11
CHIEF HIGHWAY ENGINEER DATE

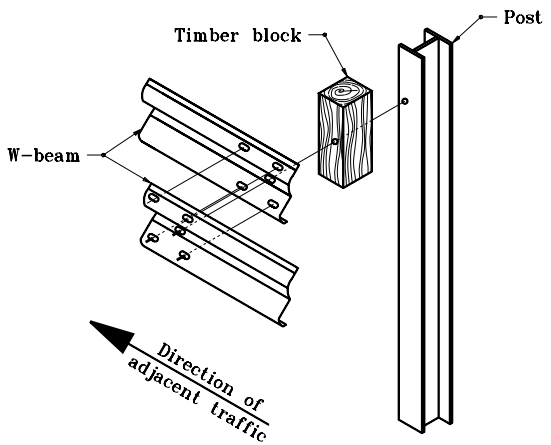

W-BEAM SPLICE CONNECTION
DETAIL AT POST

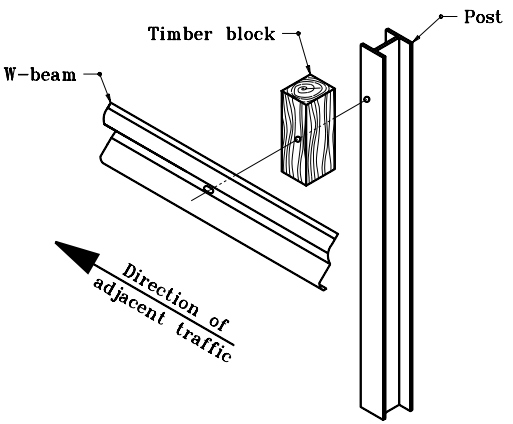

W-BEAM SPLICE CONNECTION DETAIL
AT POST FOR NON-SPLICE CONNECTIONS

INDIANA DEPARTMENT OF TRANSPORTATION

W-BEAM
GUARDRAIL ASSEMBLIES

SEPTEMBER 1998

STANDARD DRAWING NO. **E 601-WBGA-03**

ANTHONY L. UREMOVICH REGISTERED No. 18095 STATE OF INDIANA PROFESSIONAL ENGINEER

DESIGN STANDARDS ENGINEER

DETAILS PLACED IN THIS FORMAT	11-15-99
/s/ Anthony L. Uremovich DESIGN STANDARDS ENGINEER	11-15-99 DATE
/s/ Firooz Zandi CHIEF HIGHWAY ENGINEER	11-15-99 DATE
ORIGINALLY APPROVED	9-01-98

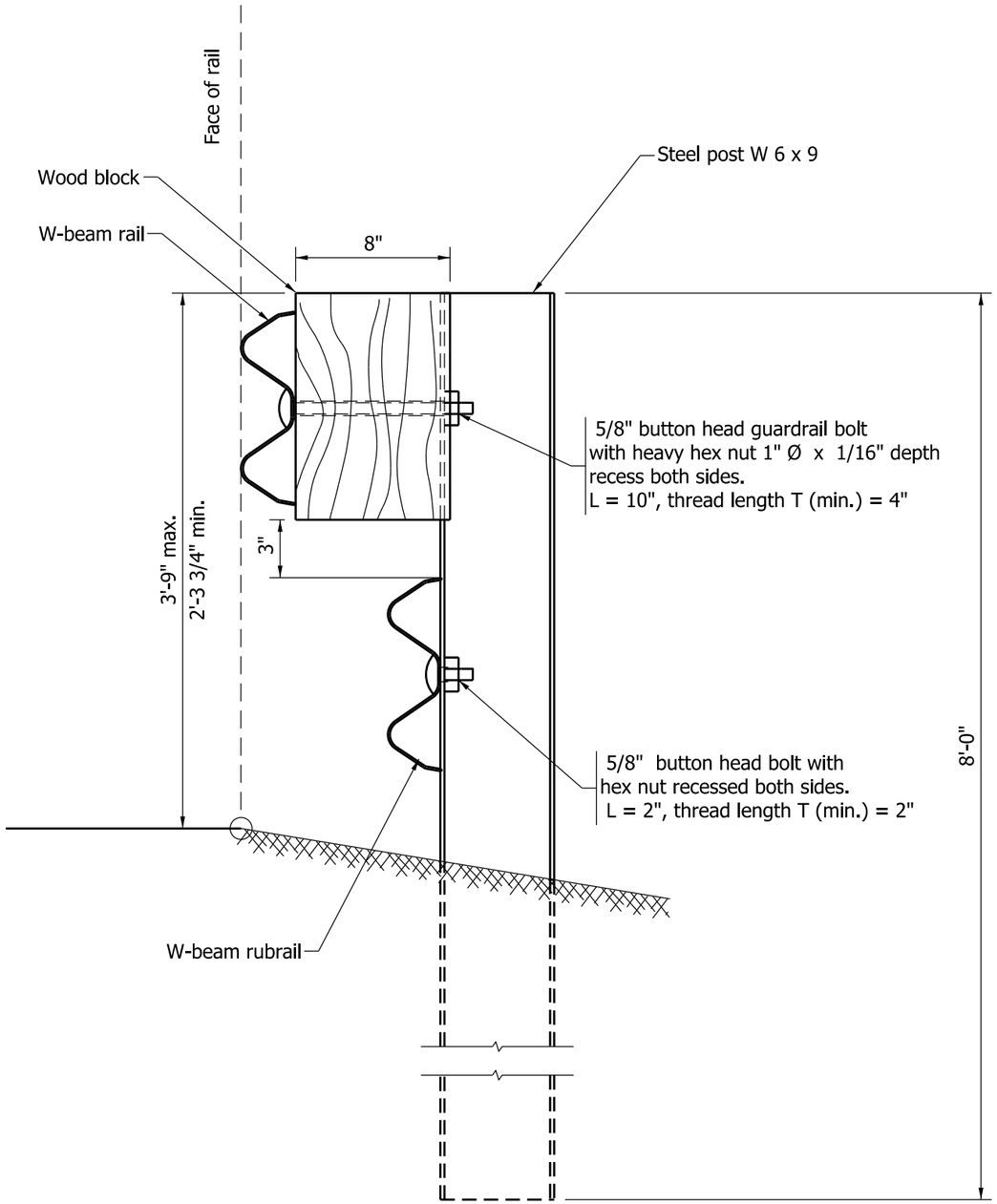

ELEVATION

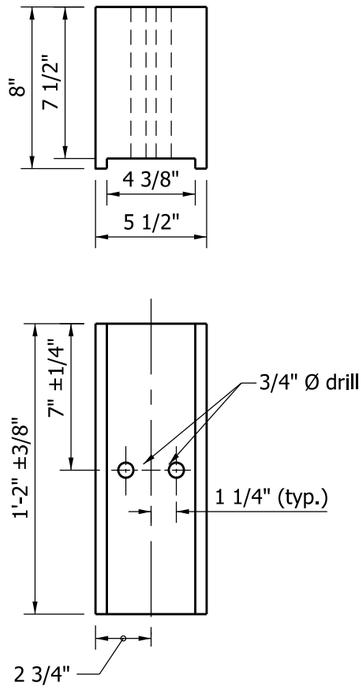

WOOD BLOCK

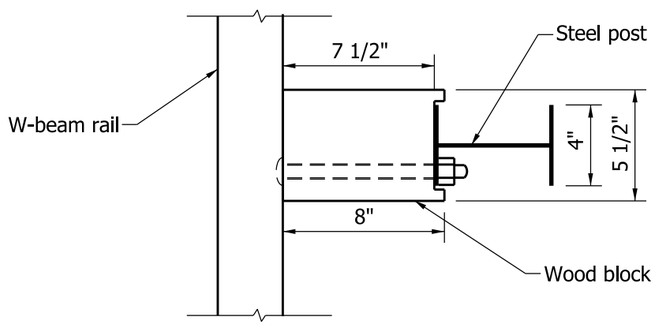

PLAN

STEEL POST AND WOOD BLOCK DETAIL
FOR WR-BEAM GUARDRAIL

NOTE:

1. All posts shall be 8'-0" lenght and spaced at 6'-3".

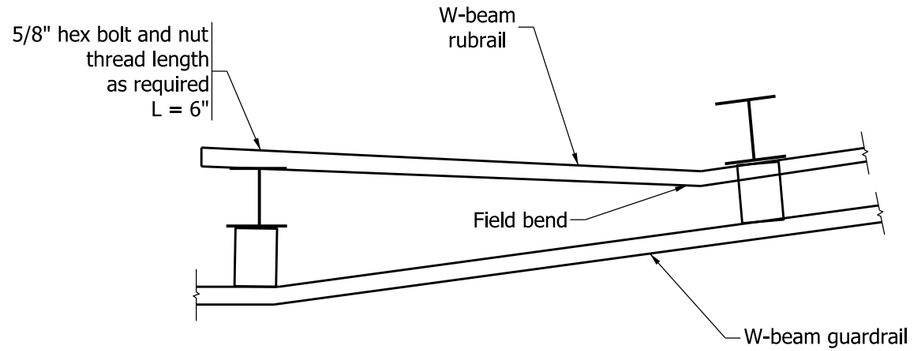

RUBRAIL TERMINATION DETAIL

INDIANA DEPARTMENT OF TRANSPORTATION

WR-BEAM GUARDRAIL

SEPTEMBER 2011

STANDARD DRAWING NO. E 601-WBGA-06

RICHARD L. VanCLEAVE
REGISTERED
No. 9750
STATE OF INDIANA
PROFESSIONAL ENGINEER

DESIGN STANDARDS ENGINEER

/s/ Richard L. VanCleave 09/01/11
DESIGN STANDARDS ENGINEER DATE

/s/ Mark A. Miller 09/01/11
CHIEF HIGHWAY ENGINEER DATE

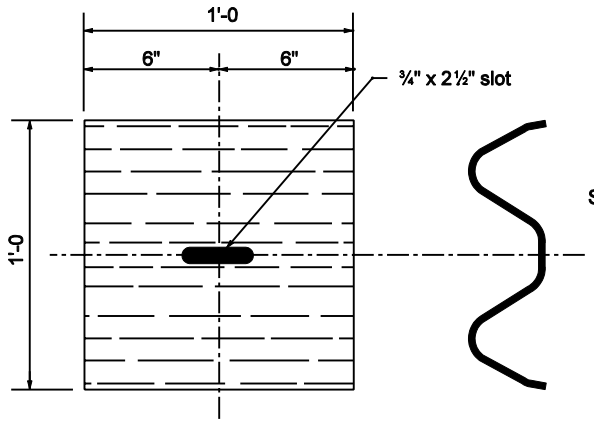

W-BEAM BACKUP PLATE

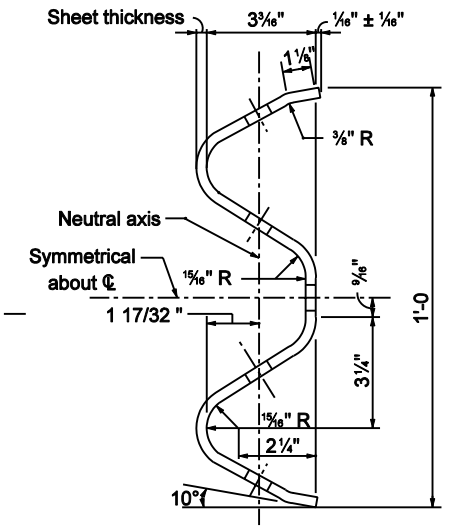

SECTION THROUGH BEAM ELEMENT

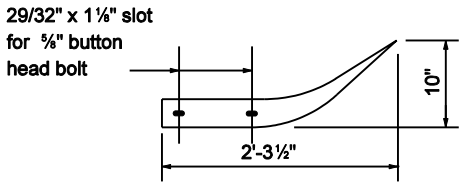

TOP VIEW

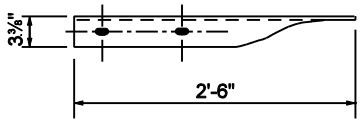

TOP VIEW

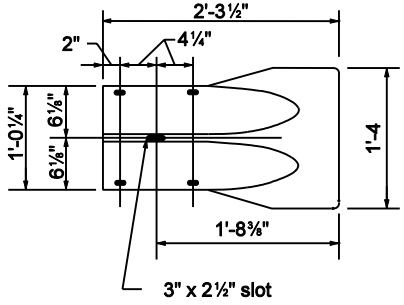

FRONT VIEW

CURVED TERMINAL END

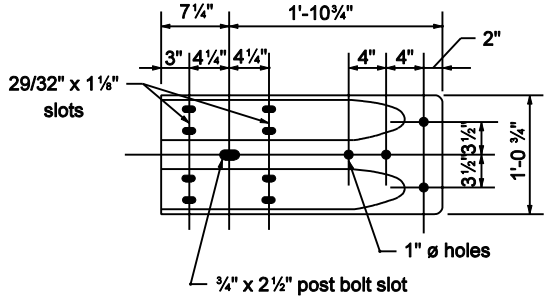

FRONT VIEW

W-BEAM TERMINAL CONNECTOR

GENERAL NOTES

1. This sheet shall be used when W-beam guardrail is specified. This sheet shall also be used when a W-beam guardrail system requires the use of standard W-beam guardrail components.
2. The details on ths sheet are for the standard components of W-beam guardrail.

INDIANA DEPARTMENT OF TRANSPORTATION

W-BEAM GUARDRAIL COMPONENTS

MARCH 2003

STANDARD DRAWING NO. E 601-WBGC-01

RICHARD L. VanCLEAVE REGISTERED No. 9750 STATE OF INDIANA PROFESSIONAL ENGINEER

DESIGN STANDARDS ENGINEER

/s/ Richard L. VanCleave 3-03-03
DESIGN STANDARDS ENGINEER DATE

/s/ Richard K. Smutzer 3-03-03
CHIEF HIGHWAY ENGINEER DATE

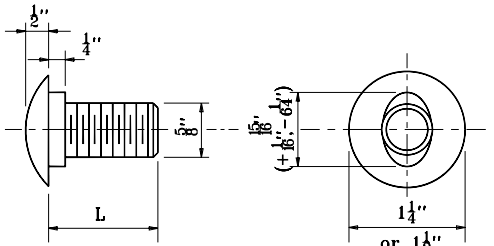

5/8" BUTTON HEAD BOLT

L	THREAD LENGTH
1 1/4"	Full Length Thread
2"	1 1/2" Min. Thread Length
8 1/2"	1 3/4" Min. Thread Length
1'-6	2 1/2" Min. Thread Length
2'-1	2" Min. Thread Length

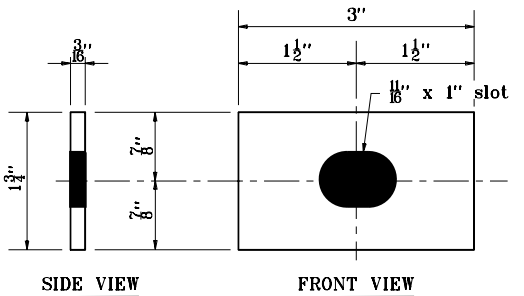

RECTANGULAR PLATE WASHER

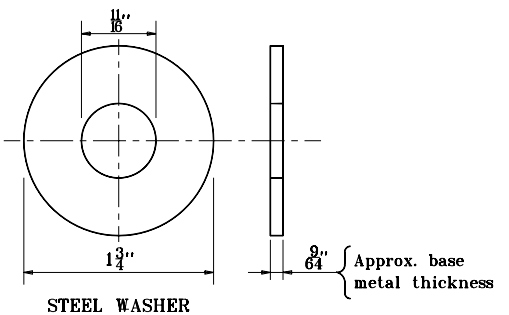

WASHER FOR 5/8" BOLT

INDIANA DEPARTMENT OF TRANSPORTATION

W-BEAM GUARDRAIL COMPONENTS

MAY 2000

STANDARD DRAWING NO. **E 601-WBGC-02**

ANTHONY L. UREMOVICH REGISTERED No. 18095 STATE OF INDIANA PROFESSIONAL ENGINEER

DESIGN STANDARDS ENGINEER

/s/ Anthony L. Uremovich 5-01-00
DESIGN STANDARDS ENGINEER — DATE

/s/ Firooz Zandi 5-01-00
CHIEF HIGHWAY ENGINEER — DATE

NOTES:

① These dimensions shall be adjusted as required to accommodate steel post flange.

2 Timber blocks shown in either Detail A or Detail B may be used.

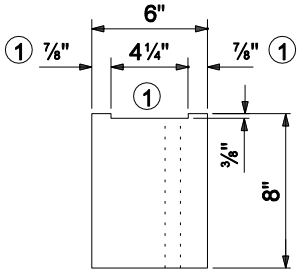

TOP VIEW

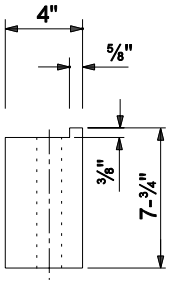

TOP VIEW

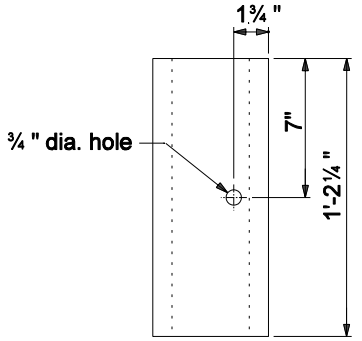

FRONT VIEW

TIMBER BLOCK DETAIL A

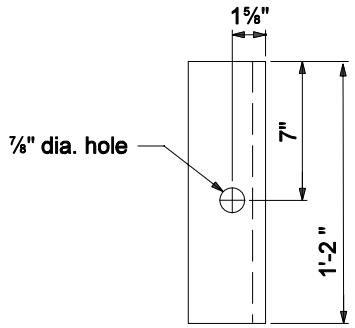

FRONT VIEW

TIMBER BLOCK DETAIL B

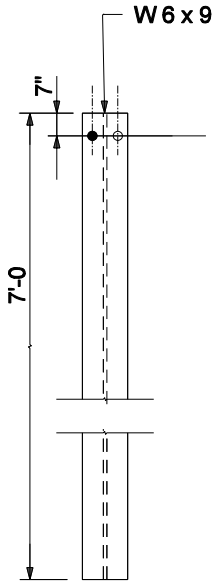

FRONT VIEW

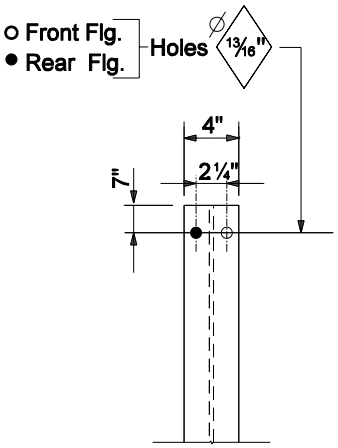

FRONT VIEW

HOLE PATTERN

STEEL POST DETAIL

INDIANA DEPARTMENT OF TRANSPORTATION

W - BEAM
GUARDRAIL COMPONENTS

SEPTEMBER 2004

STANDARD DRAWING NO. E 601-WBGC-03

RICHARD L. VanCLEAVE REGISTERED No. 9750 STATE OF INDIANA PROFESSIONAL ENGINEER

DESIGN STANDARDS ENGINEER

/s/ Richard L.VanCleave 3-01-04
DESIGN STANDARDS ENGINEER DATE

/s/ Richard K.Smutzer 3-01-04
CHIEF HIGHWAY ENGINEER DATE

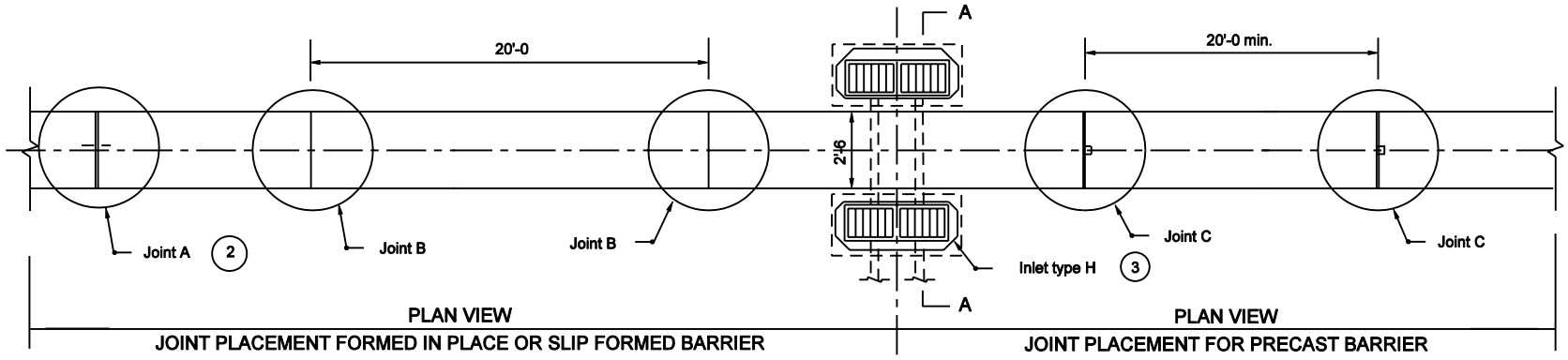

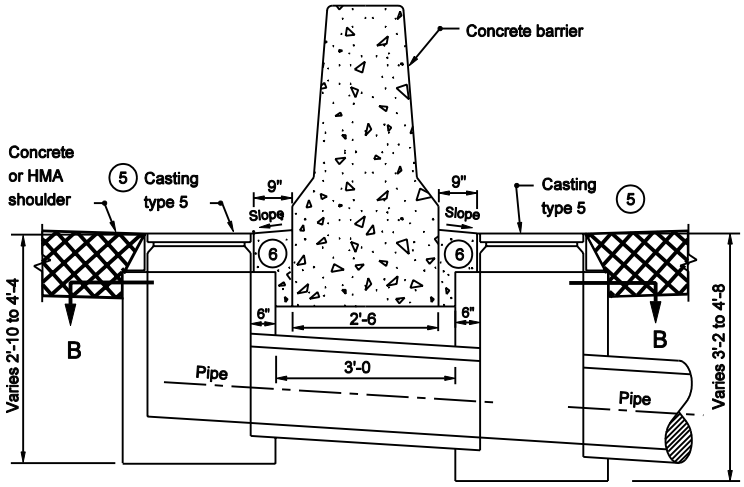

SECTION A-A

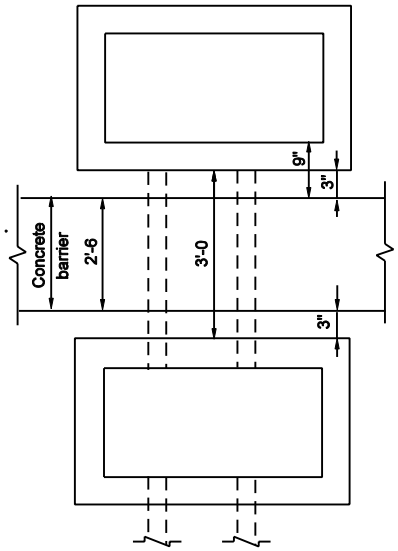

SECTION B-B

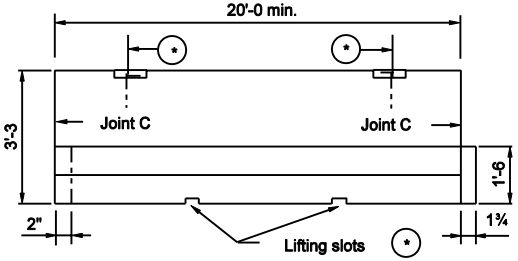

SIDE VIEW OF PRECAST SECTION

(*) Precast concrete barrier shall have threaded inserts cast into the top of each section, a minimum of ¼" below the surface, and embeded to a depth sufficient for safe lifting of the section.
Lifting slots will be permitted in addition to the inserts. The dimensions and locations of these slots may be adjusted to accomodate variations in handling equipment.

GENERAL NOTES :

1. See Standard Drawing E 602-CCMB-02 for joint details.
2. Cast-in-place or slip-formed concrete barrier shall have a joint type A at 10 ft from each end of a median bridge pier or bent. The maximum spacing between type A joints shall be 400 ft. Type A joint shall be placed at the end of each work period pour.
3. Each inlet type H includes two inlet boxes, the connector pipe between the inlet boxes, and two type 5 castings.
4. Type B joint shall be located and spaced as shown.
5. See Standard Drawings E 720-ICCA-01 to E 720-ICCA-03 for casting type 5 details.
6. Concrete shoulder or pavement between type 5 casting and concrete barrier wall.
7. See Standard Drawing E 720-INST-05B for information regarding inlet indicators.

INDIANA DEPARTMENT OF TRANSPORTATION

CONCRETE BARRIER DRAIN AND JOINT PLACEMENT

MARCH 2003

STANDARD DRAWING NO. E 602-CCMB-01

RICHARD L. VanCLEAVE REGISTERED NO. 9750 STATE OF INDIANA PROFESSIONAL ENGINEER

DESIGN STANDARDS ENGINEER

/s/ Richard L. VanCleave 3-03-03
DESIGN STANDARDS ENGINEER DATE

/s/ Richard K. Smutzer 3-03-03
CHIEF HIGHWAY ENGINEER DATE

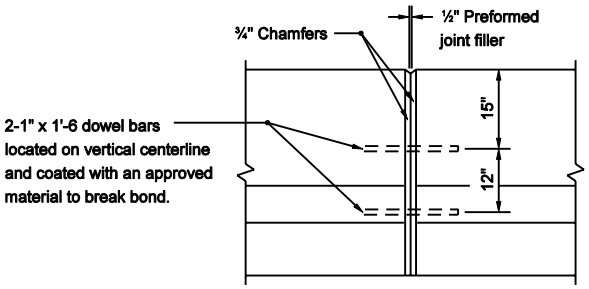

JOINT A

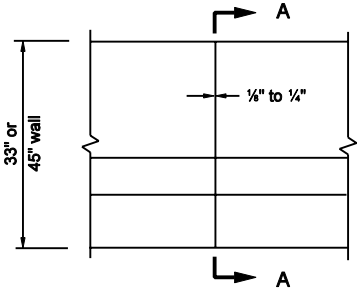

JOINT B

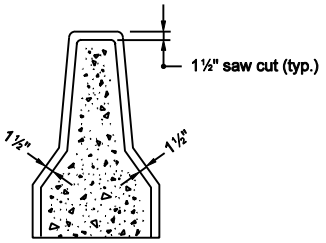

SECTION A-A

FORMED IN PLACE OR SLIP FORMED JOINTS

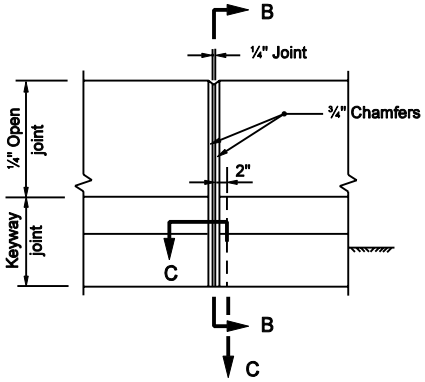

JOINT C

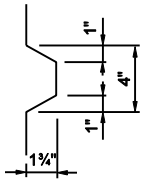

SECTION C-C

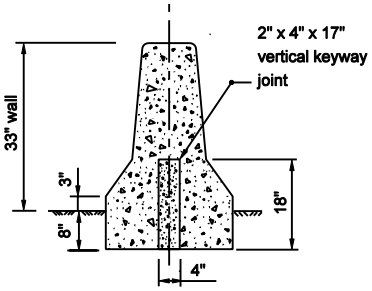

SECTION B-B

NOTES :

1. See Standard Drawing E 602-CCMB-01 for joint placement.

PRECAST JOINT

INDIANA DEPARTMENT OF TRANSPORTATION

CONCRETE BARRIER JOINT

MARCH 2003

STANDARD DRAWING NO. E 602-CCMB-02

RICHARD L. VANCLEAVE REGISTERED No. 9750 STATE OF INDIANA PROFESSIONAL ENGINEER

DESIGN STANDARDS ENGINEER

/s/ Richard L. VanCleave 3-03-03
DESIGN STANDARDS ENGINEER DATE

/s/ Richard K. Smutzer 3-03-03
CHIEF HIGHWAY ENGINEER DATE

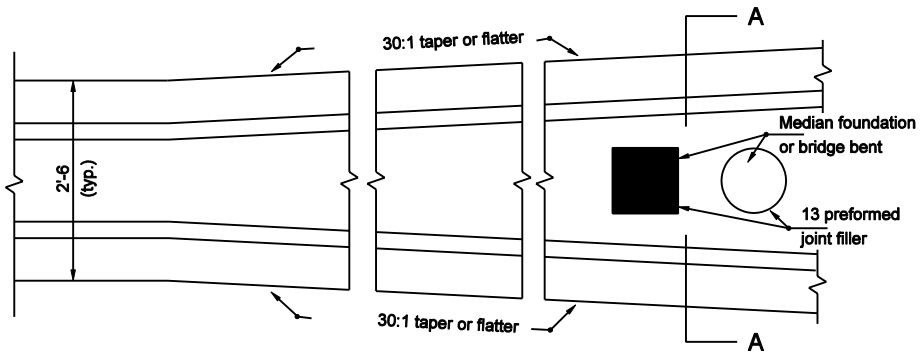

PLAN VIEW AT
INTEGRAL MEDIAN FOUNDATION OR BRIDGE BENT

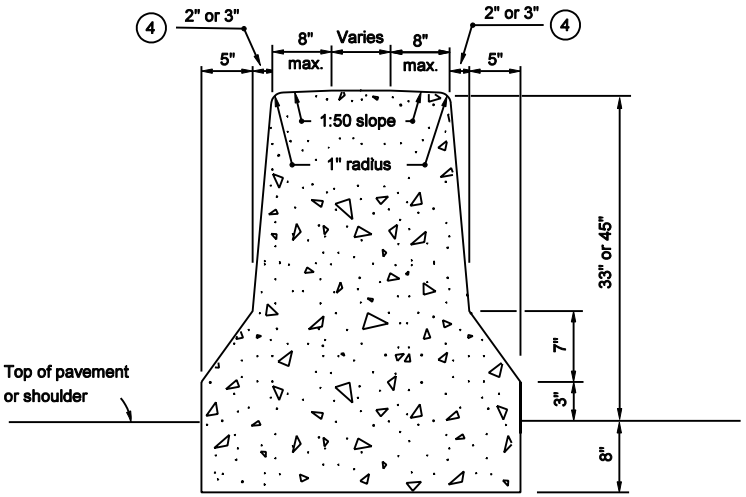

SECTION A-A

NOTES :

1. All integral median foundations shall be constructed as shown.
2. At a bridge pier, the faces of the concrete barrier shall be transitioned at a 30:1 taper to match configuration of the pier stem. At a median bridge bent, the faces of the concrete barrier shall be transitioned at a 30:1 taper to match the configuration of the crash wall. If the height of the crash wall is less than the height of the concrete barrier, the height of the crash wall shall be increased, as detailed elsewhere on the plans, to match the height of the concrete barrier.
3. An appropriate type of impact attenuator shall be designated for the ends of the concrete barrier, when it is exposed to traffic within the roadway clear zone.

(4) Use 2" for 33" height concrete barrier wall and 3" for 45" height concrete barrier wall.

INDIANA DEPARTMENT OF TRANSPORTATION

CONCRETE BARRIER DETAILS

MARCH 2003

STANDARD DRAWING NO. E 602-CCMB-03

RICHARD L. VanCLEAVE REGISTERED No. 9750 STATE OF INDIANA PROFESSIONAL ENGINEER

DESIGN STANDARDS ENGINEER

/s/ Richard L. VanCleave 3-03-03
DESIGN STANDARDS ENGINEER DATE

/s/ Richard K. Smutzer 3-03-03
CHIEF HIGHWAY ENGINEER DATE

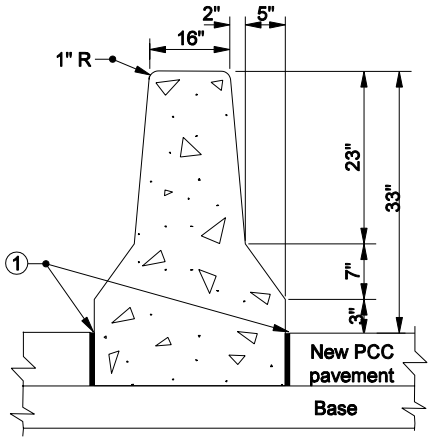

NEW PCC PAVEMENT

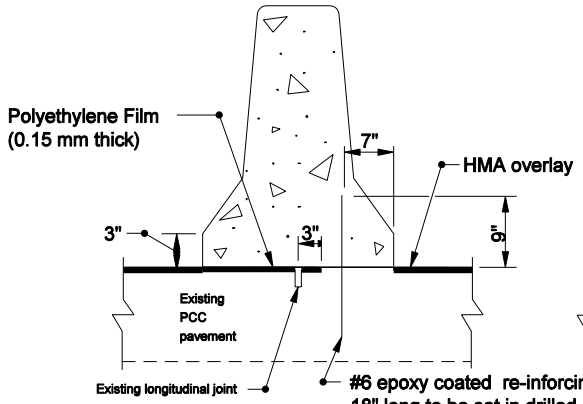

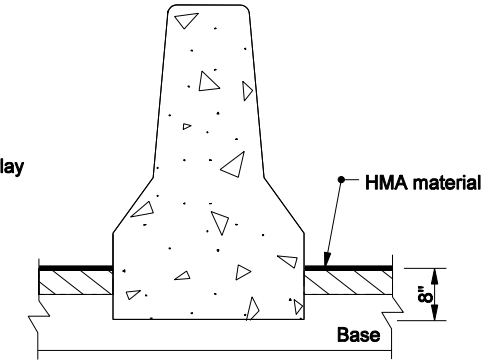

NEW HMA PAVEMENT

NEW HMA OVERLAY OVER EXISTING PCC PAVEMENT

33" HEIGHT CONCRETE BARRIER WALL

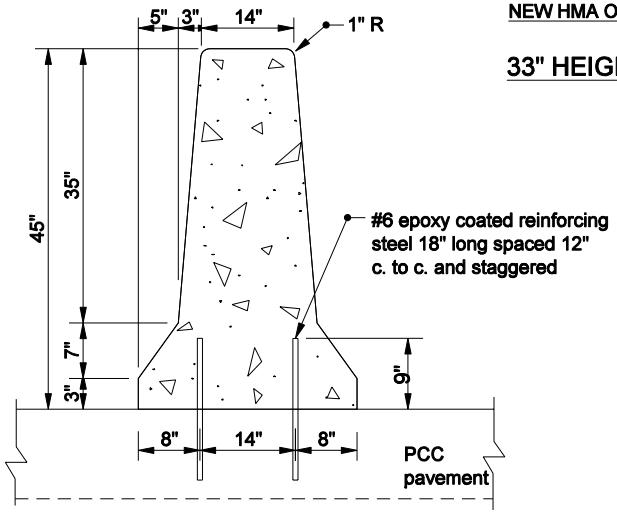

CONCRETE BARRIER WITH PCC PAVEMENT

45" HEIGHT CONCRETE BARRIER WALL

NOTES:

① $\frac{1}{2}$" Preformed Joint Filler.

INDIANA DEPARTMENT OF TRANSPORTATION

CONCRETE BARRIER DETAILS

SEPTEMBER 2006

STANDARD DRAWING NO. E 602-CCMB-04

RICHARD L. VanCLEAVE REGISTERED No. 9750 STATE OF INDIANA PROFESSIONAL ENGINEER

DESIGN STANDARDS ENGINEER

/s/ Richard L. VanCleave 9-01-06
DESIGN STANDARDS ENGINEER DATE

/s/ Richard K. Smutzer 9-01-06
CHIEF HIGHWAY ENGINEER DATE

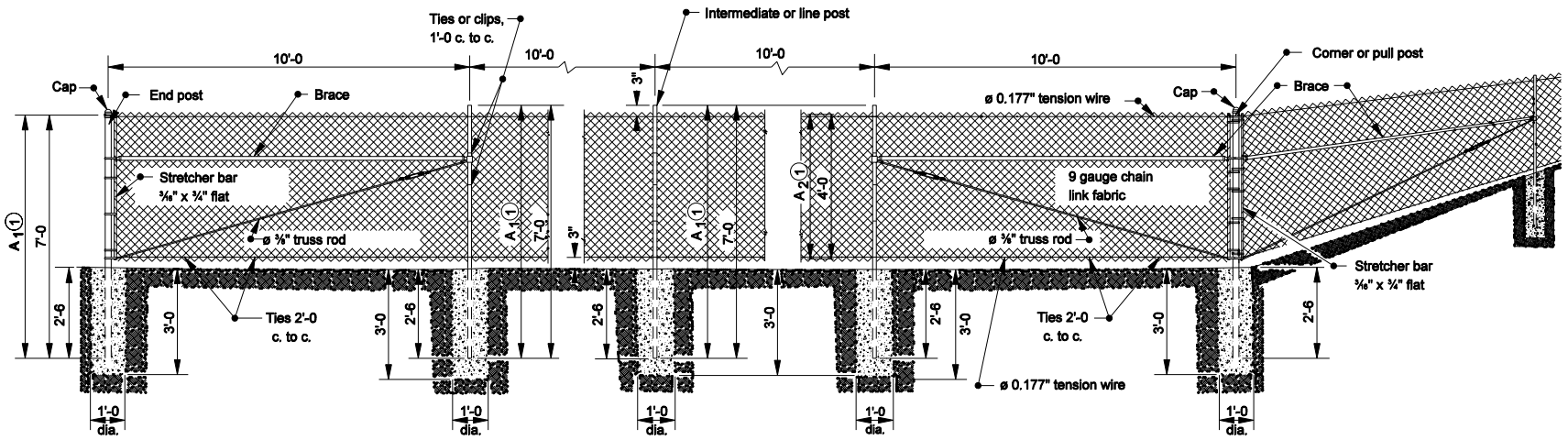

RIGHT OF WAY FENCE

Steel Chain Link Fence

GENERAL NOTES

(1) For each additional 1'-0 in height increase dimensions A_1 and A_2 by 1'-0.

2. Dimensions as shown are for 4'-0 fence.

3. For chain link type stream crossing or depression detail see Standard Drawing E 603-CLTF-02 for dimensions and installation.

TUBULAR POST CHART								
	GROUP 1				GROUP 2			
HEIGHT OF FENCE	< 6'		≥ 6'		< 6'		≥ 6'	
	NOM. DIA.	WEIGHT	NOM. DIA.	WEIGHT	NOM. DIA.	WEIGHT	NOM. DIA.	WEIGHT
	inches	lb/ft	inches	lb/ft	inches	lb/ft	inches	lb/ft
END, CORNER, AND PULL POSTS	2	3.65	2½"	5.79	2	3.12	2½"	4.64
LINE POSTS	1¼"	2.27	2	3.65	1¼"	1.84	2	3.12
BRACE	1¼"	2.27	1¼"	2.27	1¼"	1.84	1¼"	1.84

INDIANA DEPARTMENT OF TRANSPORTATION

CHAIN LINK TYPE FENCE

MARCH 2006

STANDARD DRAWING NO. E 603-CLTF-01

RICHARD L. VANCLEAVE REGISTERED No. 9750 STATE OF INDIANA PROFESSIONAL ENGINEER

DESIGN STANDARDS ENGINEER

/s/ Richard L. VanCleave 3-01-06
DESIGN STANDARDS ENGINEER DATE

/s/ Richard K. Smutzer 3-01-06
CHIEF HIGHWAY ENGINEER DATE

GENERAL NOTES

1. This installation to be made only where directed. Barbed wire will not be required at points where such installation would cause the collecting of drift in the channel.
2. Line posts of 9'-6 or longer for crossing shall be 2" nominal tubing or 3 x 3 x 1/4 angles and shall be set in concrete footings.
3. Extra length posts to be used as directed.

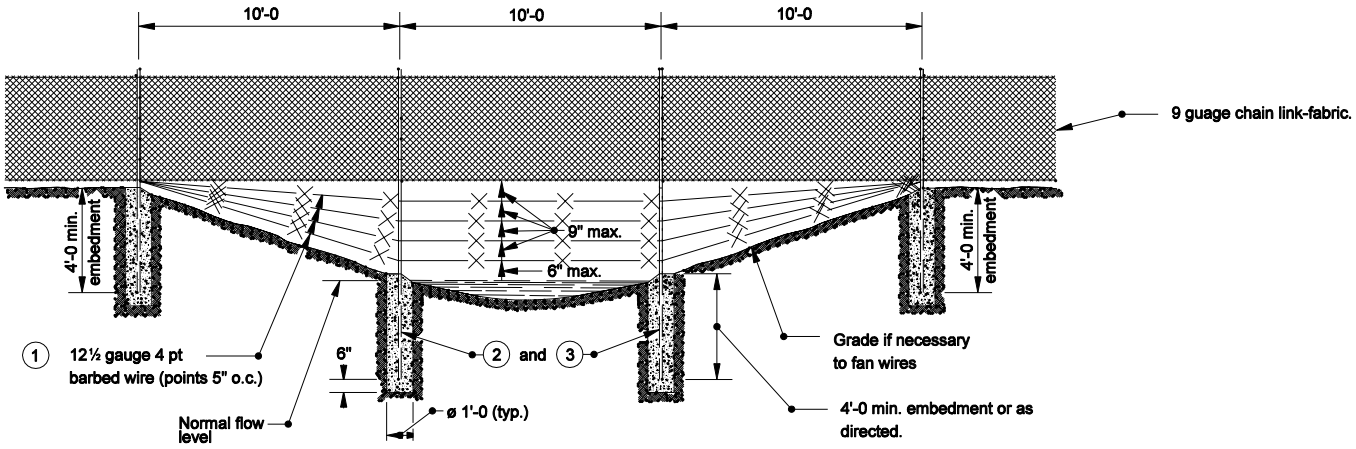

SECTION AT STREAM CROSSING OR DEPRESSION

INDIANA DEPARTMENT OF TRANSPORTATION

CHAIN LINK TYPE FENCE

SEPTEMBER 2004

STANDARD DRAWING NO. E 603-CLTF-02

RICHARD L. VanCLEAVE REGISTERED No. 9750 STATE OF INDIANA PROFESSIONAL ENGINEER

DESIGN STANDARDS ENGINEER

/s/ Richard L. VanCleave 9-01-04
DESIGN STANDARDS ENGINEER DATE

/s/ Richard K. Smutzer 9-01-04
CHIEF HIGHWAY ENGINEER DATE

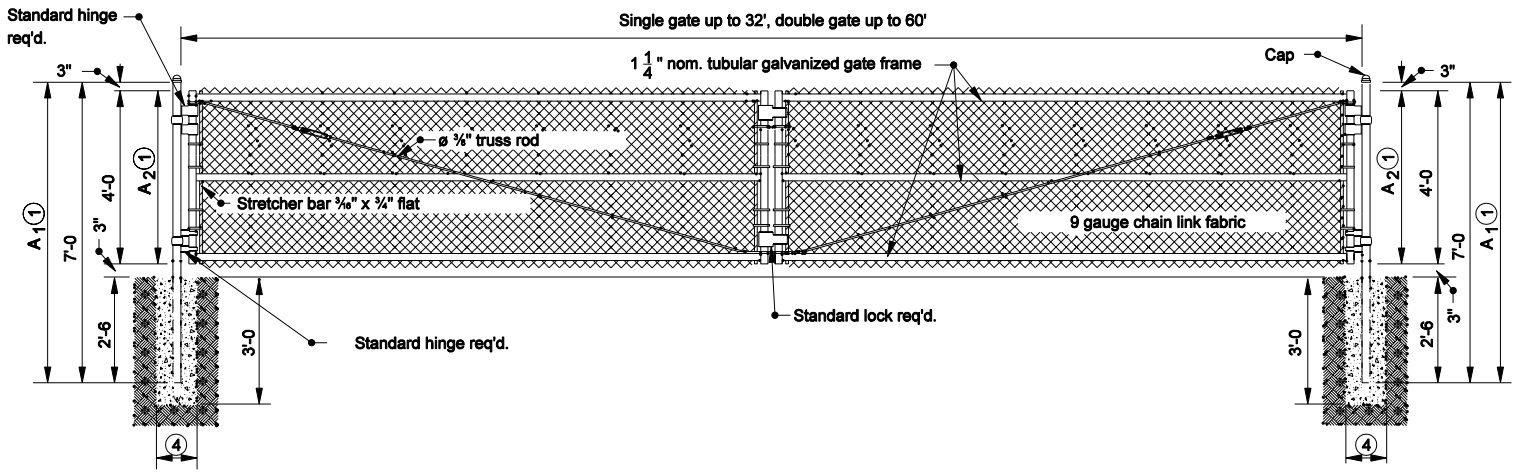

CHAIN LINK GATE

GENERAL NOTES

(1) For each additional 1'-0 in height increase dimension A_1 and A_2 by 1'-0.

2. See Standard Drawing E 603-CLTF-01 for the tubular post chart.

3. Dimensions as shown are for 4'-0 fence.

(4) Diameter equals 10" plus the outside diameter of the post.

INDIANA DEPARTMENT OF TRANSPORTATION

CHAIN LINK TYPE GATE

SEPTEMBER 2004

STANDARD DRAWING NO. E 603-CLTF-03

RICHARD L. VanCLEAVE REGISTERED No. 9750 STATE OF INDIANA PROFESSIONAL ENGINEER

DESIGN STANDARDS ENGINEER

/s/ Richard L.VanCleave 9-01-04
DESIGN STANDARDS ENGINEER DATE

/s/ Richard K.Smutzer 9-01-04
CHIEF HIGHWAY ENGINEER DATE

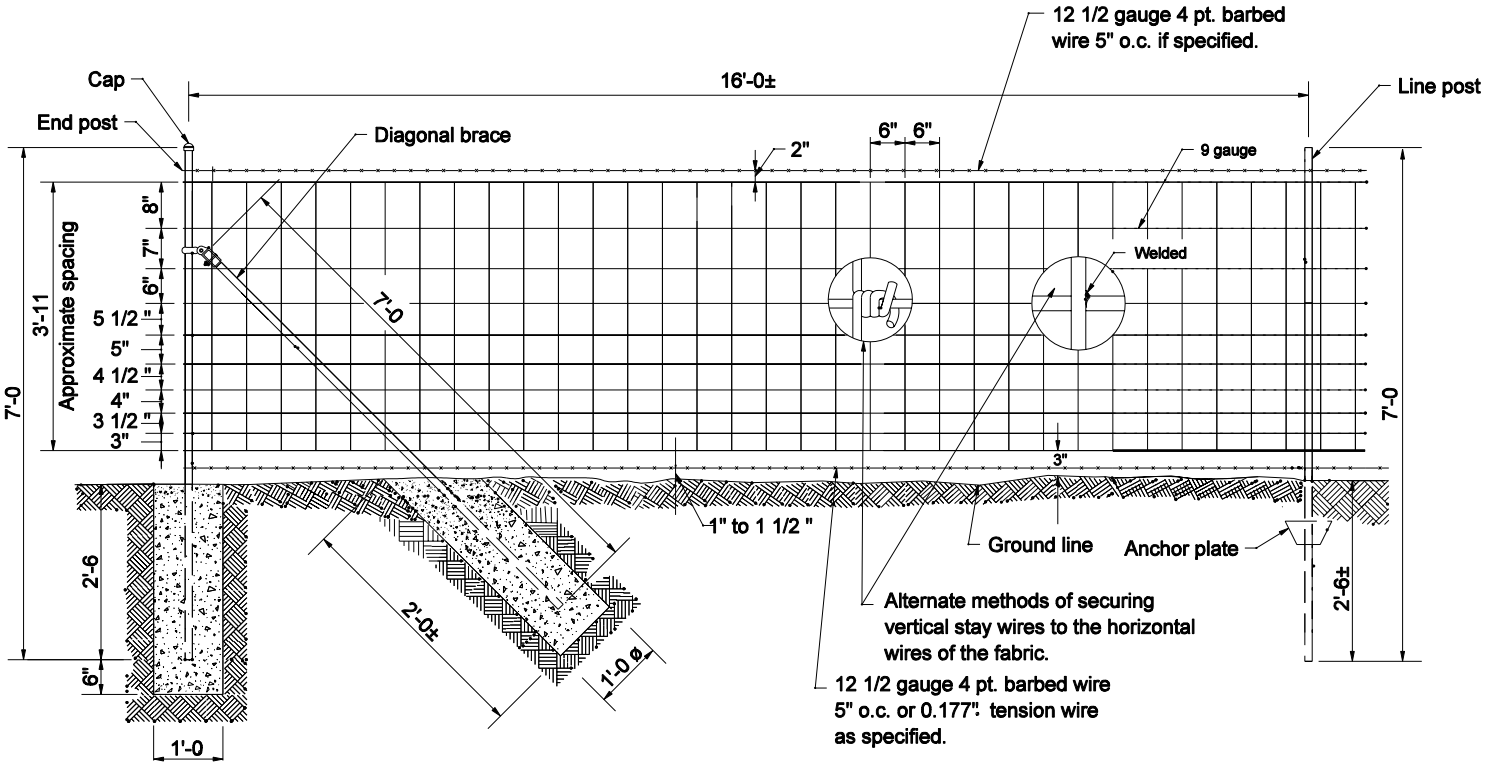

FARM FIELD TYPE FENCE

POST CHART						
4'-0 HEIGHT			GROUP 1		GROUP 2	
		WEIGHT	NOM. DIA.	WEIGHT	NOM. DIA.	WEIGHT
		lb/ft	in.	lb/ft	in.	lb/ft
END, CORNER, AND PULL POSTS			2	3.65	2	3.12
LINE POSTS	STUDDED "T"	1.33				
	"U"	1.33				
DIAGONAL BRACE			1 1/4	2.27	1 1/4	1.84

INDIANA DEPARTMENT OF TRANSPORTATION

FARM FIELD TYPE FENCE

SEPTEMBER 2004

STANDARD DRAWING NO. E 603-FFTF-01

RICHARD L. VanCLEAVE REGISTERED No. 9750 STATE OF INDIANA PROFESSIONAL ENGINEER

DESIGN STANDARDS ENGINEER

/s/ Richard L. VanCleave 9-01-04
DESIGN STANDARDS ENGINEER DATE

/s/ Richard K. Smutzer 9-01-04
CHIEF HIGHWAY ENGINEER DATE

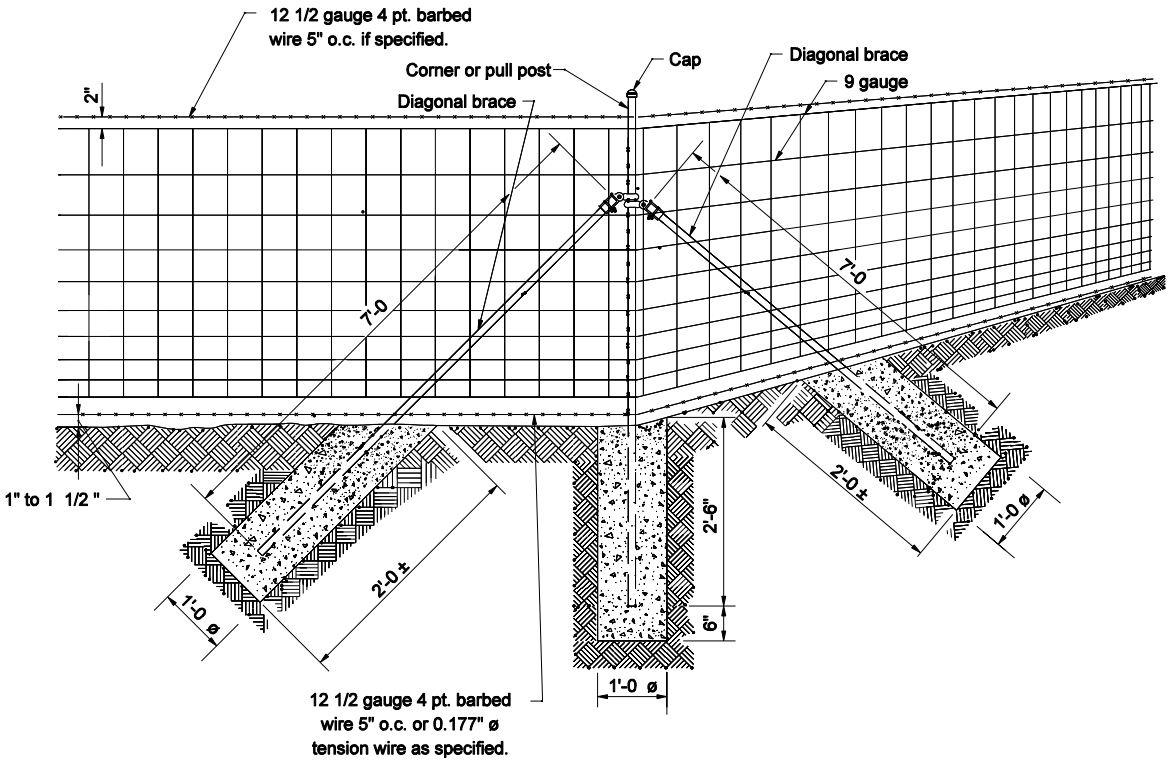

FARM FIELD TYPE FENCE CORNER

GENERAL NOTES

1. See Standard Drawing E 603-FFTF-01 for Post Chart.

INDIANA DEPARTMENT OF TRANSPORTATION

FARM FIELD TYPE FENCE

SEPTEMBER 2004

STANDARD DRAWING NO. E 603-FFTF-02

RICHARD L. VanCLEAVE REGISTERED No. 9750 STATE OF INDIANA PROFESSIONAL ENGINEER

DESIGN STANDARDS ENGINEER

/s/ Richard L. VanCleave 9-01-04
DESIGN STANDARDS ENGINEER DATE

/s/ Richard K. Smutzer 9-01-04
CHIEF HIGHWAY ENGINEER DATE

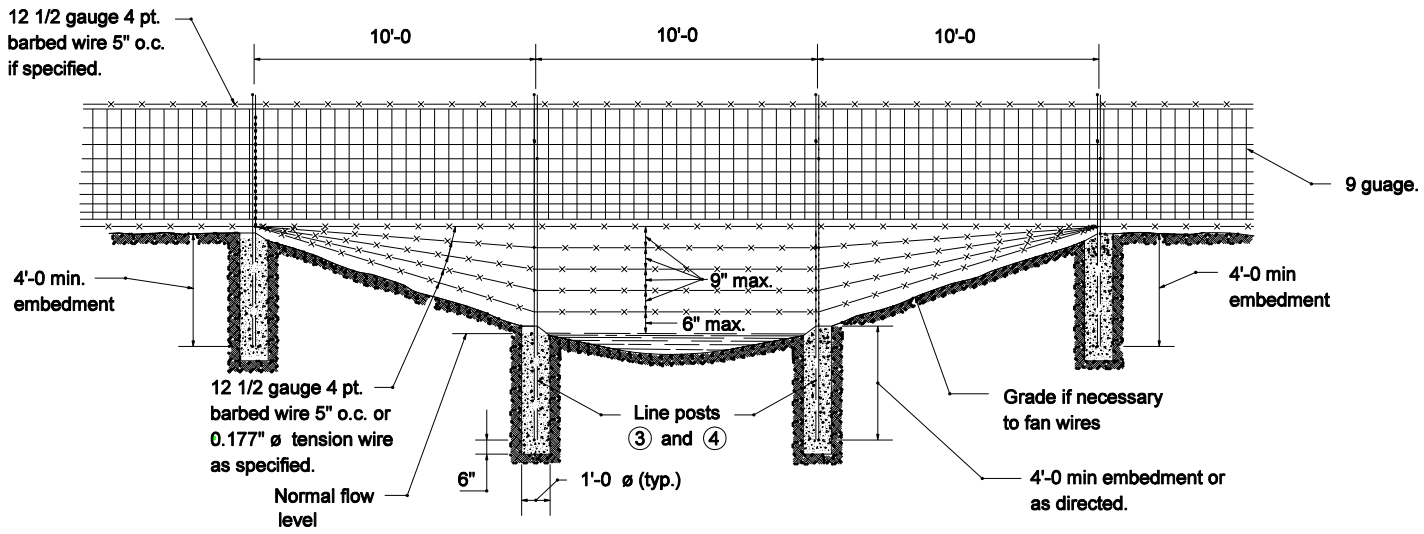

SECTION AT STREAM CROSSING OR DEPRESSION

GENERAL NOTES

1. For farm field type gate see Standard Drawing E 603-CLTF-03 for dimensions and installation. Substitute farm field type fence for chain link type fence.
2. The placement of fence over a stream crossing or depression shall be as directed.

③ Extra length posts shall be used as directed.

④ Line posts 9'-6 or longer for crossing shall be 2" nom. dia. ø tubing or L 3 x 3 x $\frac{1}{4}$ " angles and shall be set in concrete footings.

INDIANA DEPARTMENT OF TRANSPORTATION

FARM FIELD TYPE FENCE

SEPTEMBER 2004

STANDARD DRAWING NO. E 603-FFTF-03

RICHARD L. VanCLEAVE REGISTERED No. 9750 STATE OF INDIANA PROFESSIONAL ENGINEER

DESIGN STANDARDS ENGINEER

/s/ Richard L.VanCleave 9-01-04
DESIGN STANDARDS ENGINEER DATE

/s/ Richard K.Smutzer 9-01-04
CHIEF HIGHWAY ENGINEER DATE

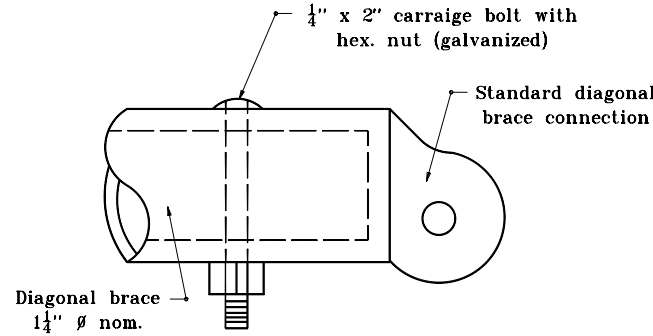

STANDARD METHOD

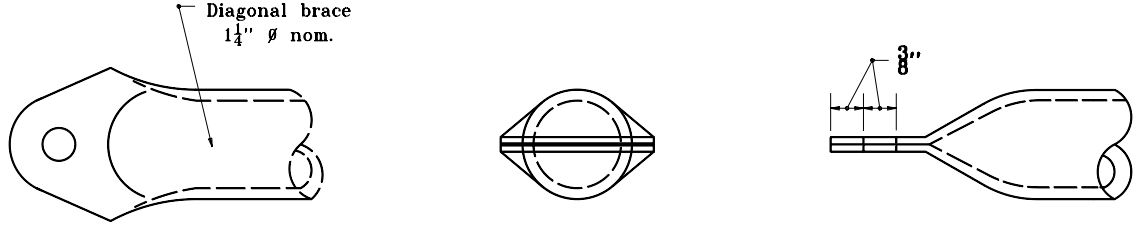

SIDE VIEW | END VIEW | TOP VIEW

ALTERNATE METHOD

DIAGONAL BRACE CONNECTION

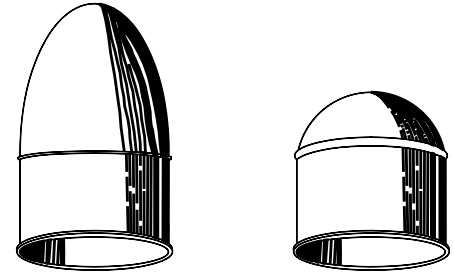

TYPICAL CAPS FOR TUBULAR POSTS

INDIANA DEPARTMENT OF TRANSPORTATION

BRACE CONNECTIONS AND POST CAPS

APRIL 1995

STANDARD DRAWING NO. **E 603-FFTF-04**

ANTHONY L. UREMOVICH REGISTERED No. 18095 STATE OF INDIANA PROFESSIONAL ENGINEER

DESIGN STANDARDS ENGINEER

DETAILS PLACED IN THIS FORMAT 7-27-99

/s/ Anthony L. Uremovich 7-27-99
DESIGN STANDARDS ENGINEER DATE

/s/ Firooz Zandi 7-27-99
CHIEF HIGHWAY ENGINEER DATE

ORIGINALLY APPROVED 4-03-95

NOTES:

1. Dimension D is equal to the full depth of the sidewalk or curb ramp.

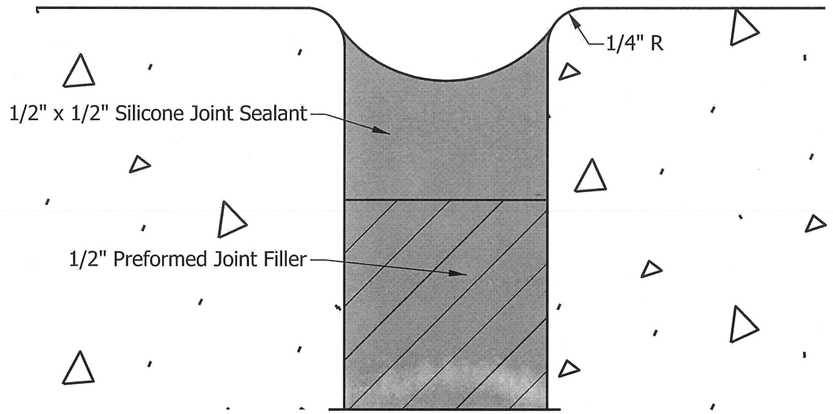

DETAIL A

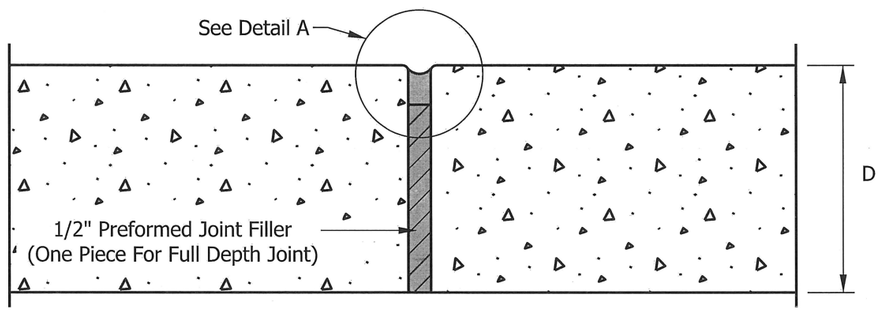

SIDEWALK EXPANSION JOINT

INDIANA DEPARTMENT OF TRANSPORTATION

SIDEWALK EXPANSION JOINT

SEPTEMBER 2015

STANDARD DRAWING NO. E 604-CCSJ-01

ELIZABETH W. PHILLIPS
REGISTERED
No. 10200124
STATE OF INDIANA
PROFESSIONAL ENGINEER

/s/ Elizabeth W. Phillips 12/02/14
DESIGN STANDARDS ENGINEER DATE

/s/ Mark A. Miller 12/02/14
CHIEF ENGINEER DATE

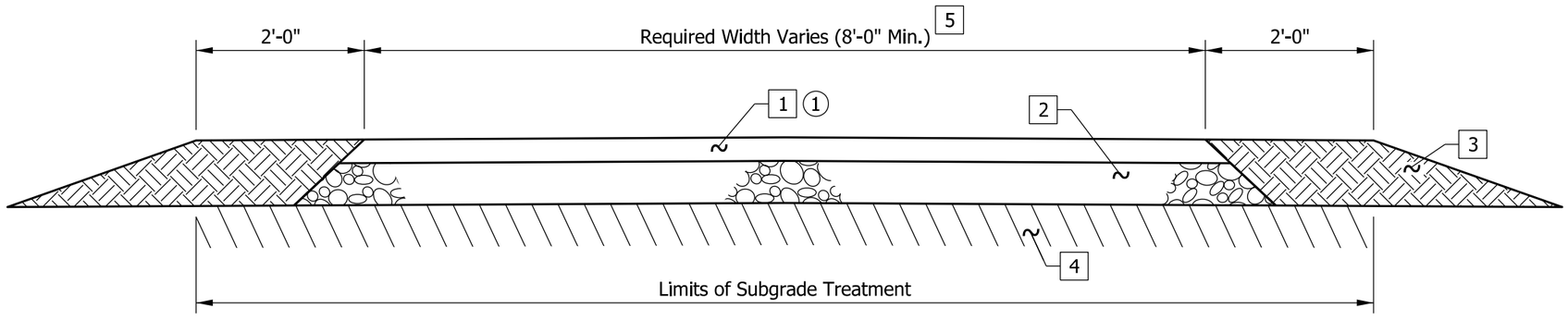

NOTE:

(1) Construct safety edge as required for Surface and Intermediate layers at edge of pavement.

LEGEND

1. HMA for Sidewalk Consisting of 140 lb/yd² HMA Surface, Type B, on 220 lb/yd² HMA Intermediate, Type B
2. 6" Compacted Aggregate No. 53, Base
3. Earth Shoulder
4. Subgrade Treatment Type III, 6" of Soil Compacted to the Density and Moisture Requirement
5. Width and Cross Slope as Required

INDIANA DEPARTMENT OF TRANSPORTATION

NON-MOTORIZED VEHICLE USE FACILITY HMA PAVEMENT SECTION

SEPTEMBER 2017

STANDARD DRAWING NO. E 604-NVUF-01

ELIZABETH W. PHILLIPS
REGISTERED
No. 10200124
STATE OF INDIANA
PROFESSIONAL ENGINEER

/s/ Elizabeth W. Phillips 04/27/17
DESIGN STANDARDS ENGINEER DATE

/s/ John Leckie 04/28/17
CHIEF ENGINEER DATE

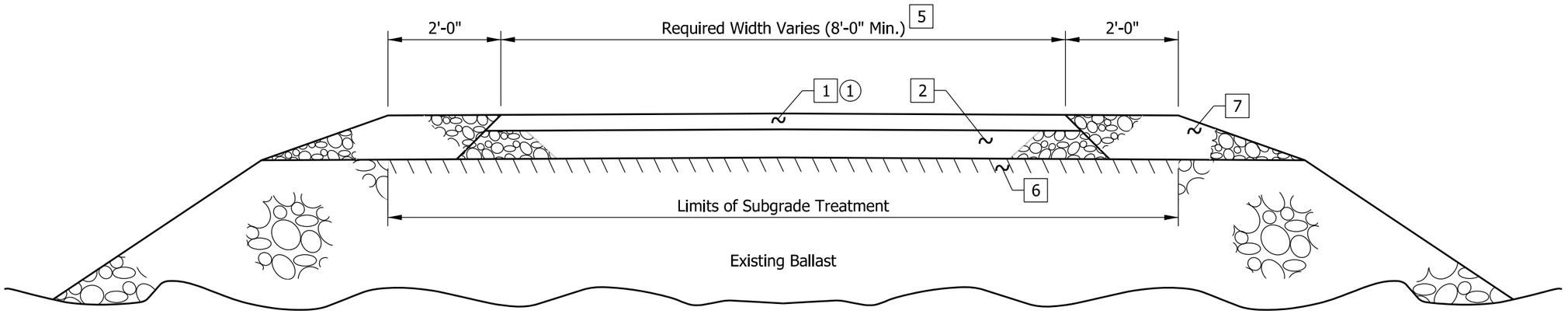

NOTE:

(1) Construct safety edge as required for Surface and Intermediate layers at edge of pavement.

LEGEND

1 HMA for Sidewalk Consisting of 140 lb/yd² HMA Surface, Type B, on 220 lb/yd² HMA Intermediate, Type B

2 6" Compacted Aggregate No. 53, Base

5 Width and Cross Slope as Required

6 Subgrade Treatment Type V, 3" Subgrade Excavated and Replaced with 3" Coarse Aggregate No. 53

7 Variable-Depth Compacted Aggregate No. 53 or No. 73

INDIANA DEPARTMENT OF TRANSPORTATION

NON-MOTORIZED VEHICLE USE FACILITY HMA PAVEMENT SECTION ON ABANDONED RAILROAD CORRIDOR

SEPTEMBER 2017

STANDARD DRAWING NO. E 604-NVUF-02

ELIZABETH W. PHILLIPS
REGISTERED
No. 10200124
STATE OF INDIANA
PROFESSIONAL ENGINEER

/s/ Elizabeth W. Phillips 04/27/17
DESIGN STANDARDS ENGINEER DATE

/s/ John Leckie 04/28/17
CHIEF ENGINEER DATE

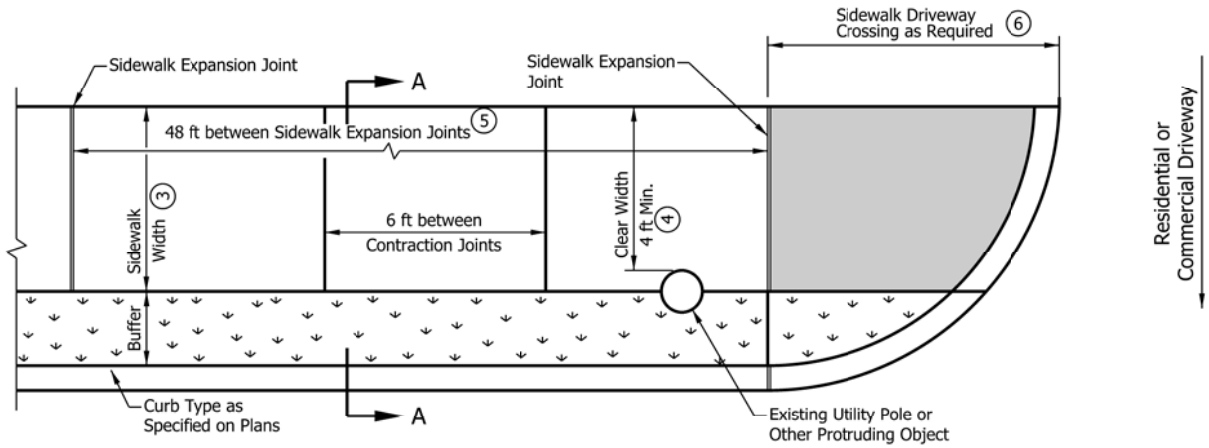

SIDEWALK PLAN

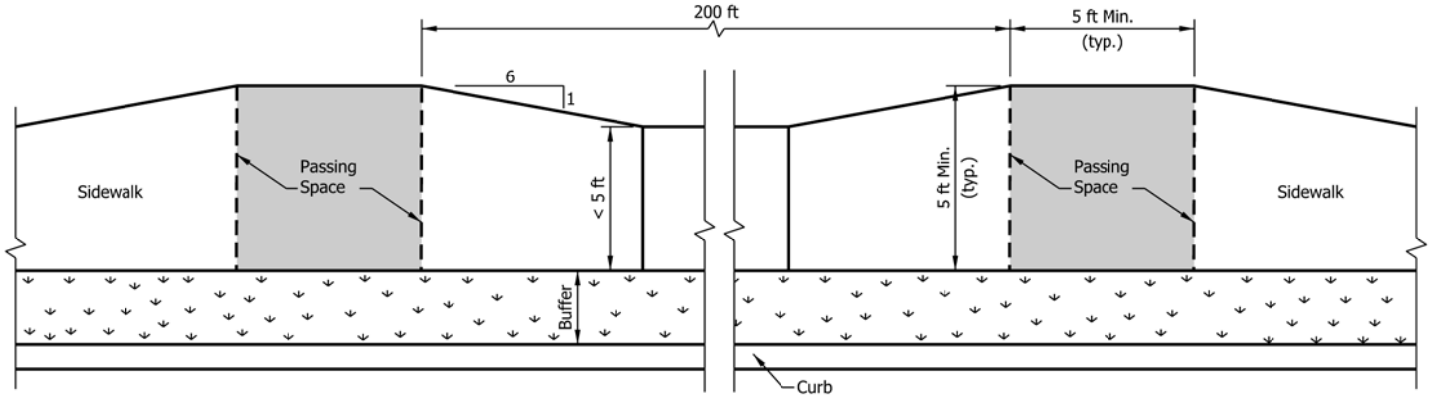

PASSING SPACE

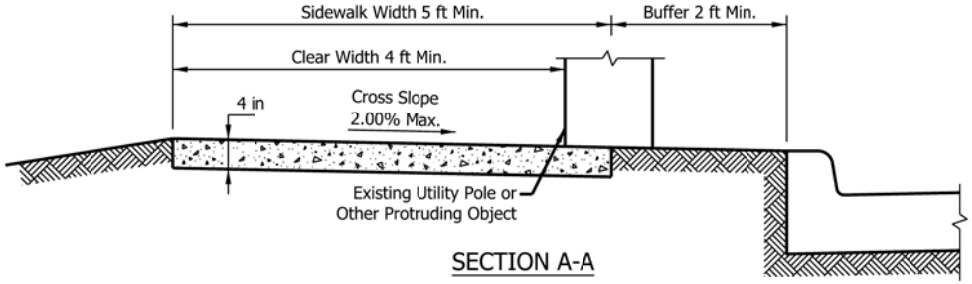

SECTION A-A

NOTES:

1. All slopes are absolute rather than relative to the sidewalk or roadway grade. Slopes at least 0.50% less than the maximum are preferred.
2. The grade of the sidewalk is measured in the direction of pedestrian travel. The grade of the sidewalk shall not exceed the grade of the adjacent roadway. The cross slope is measured perpendicular to the direction of pedestrian travel. The cross slope of the sidewalk shall not exceed 2.00%.

(3) Where there is a buffer between the sidewalk and curb, the preferred minimum sidewalk clear width is 5 ft.

(4) A 4-ft minimum clear width shall be provided adjacent to street furniture, mailbox, utility pole, or other protruding object. Where the sidewalk clear width is less than 5 ft, a passing space shall be provided at 200 ft intervals. The passing space minimum clear dimension shall be 5 ft x 5 ft.

(5) See Standard Drawing E 604-CCSJ-01 for sidewalk expansion joint details.

(6) See Standard Drawing E 604-SDWK-03 for sidewalk driveway crossing configurations.

INDIANA DEPARTMENT OF TRANSPORTATION

SIDEWALK DETAILS
SIDEWALK WITH BUFFER

SEPTEMBER 2016

STANDARD DRAWING NO. E 604-SDWK-01

ELIZABETH W. PHILLIPS
REGISTERED
No. 10200124
STATE OF INDIANA
PROFESSIONAL ENGINEER

/s/ Elizabeth W. Phillips 03/16/16
DESIGN STANDARDS ENGINEER DATE

/s/ Mark A. Miller 03/18/16
CHIEF ENGINEER DATE

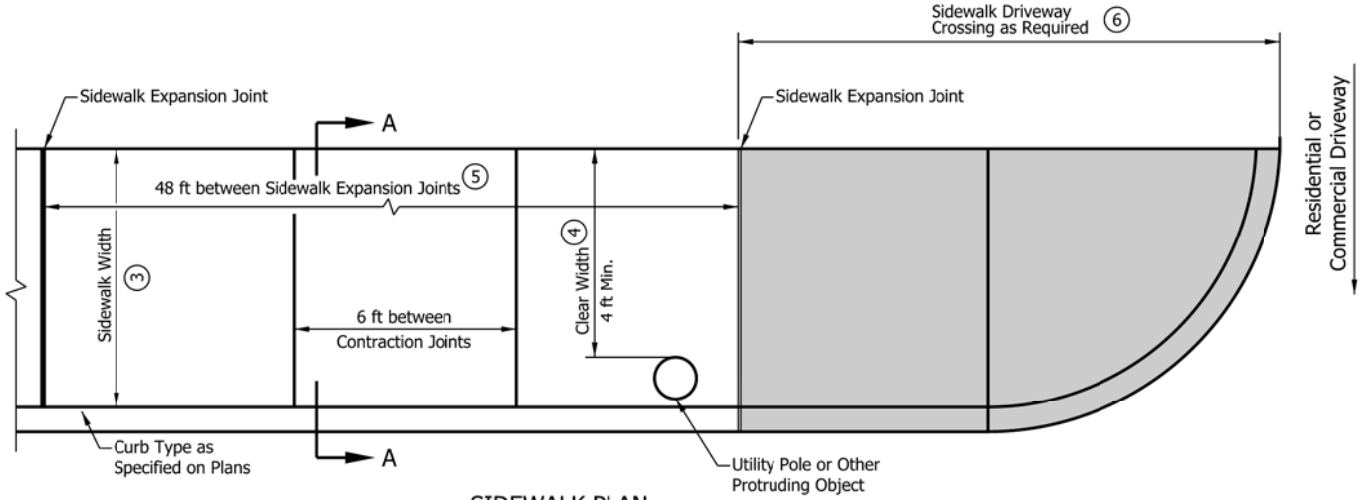

SIDEWALK PLAN

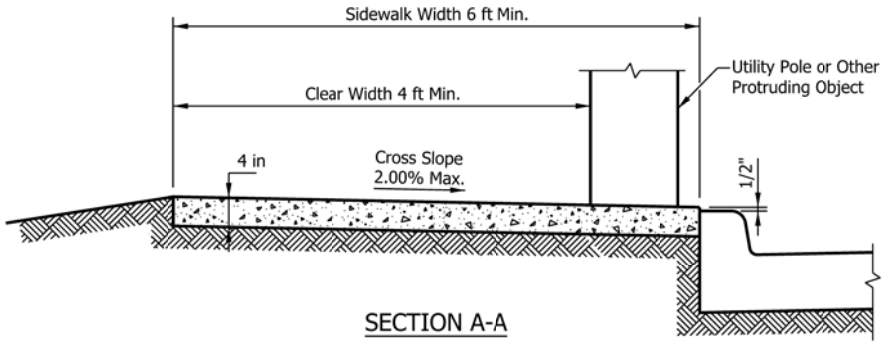

SECTION A-A

NOTES:

1. All slopes are absolute rather than relative to the sidewalk or roadway grade. Slopes at least 0.50% less than the maximum are preferred.
2. The grade of the sidewalk is measured in the direction of pedestrian travel. The grade of the sidewalk shall not exceed the grade of the adjacent roadway. The cross slope is measured perpendicular to the direction of pedestrian travel. The cross slope of the sidewalk shall not exceed 2.00%.

(3) Where there is no buffer between the sidewalk and curb, the preferred minimum sidewalk width is 6 ft.

(4) A 4-ft minimum clear width shall be provided adjacent to street furniture, mailbox, utility pole, or other protruding object. Where the sidewalk clear width is less than 5 ft, a passing space shall be provided at 200 ft intervals. See Standard Drawing E 604-SDWK-01 for sidewalk passing space details.

(5) See Standard Drawing E 604-CCSJ-01 for sidewalk expansion joint details.

(6) See Standard Drawing E 604-SDWK-03 for sidewalk driveway crossing configurations.

INDIANA DEPARTMENT OF TRANSPORTATION

SIDEWALK DETAILS
SIDEWALK ADJACENT TO CURB

SEPTEMBER 2016

STANDARD DRAWING NO. E 604-SDWK-02

ELIZABETH W. PHILLIPS
REGISTERED
No. 10200124
STATE OF INDIANA
PROFESSIONAL ENGINEER

/s/ Elizabeth W. Phillips 03/16/16
DESIGN STANDARDS ENGINEER DATE

/s/ Mark A. Miller 03/18/16
CHIEF ENGINEER DATE

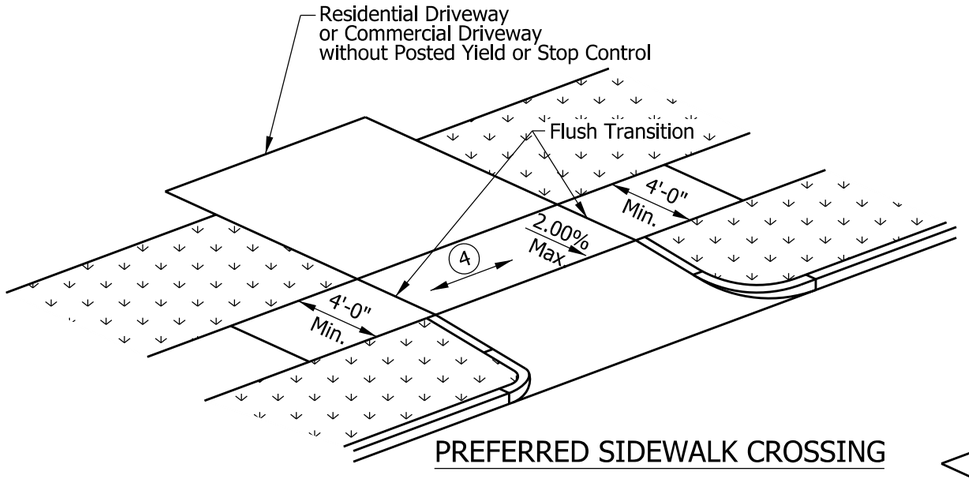

PREFERRED SIDEWALK CROSSING

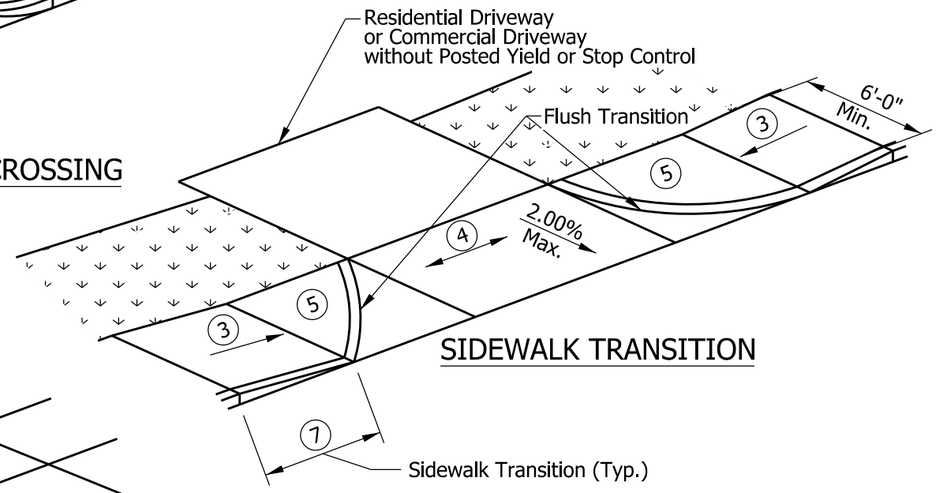

SIDEWALK TRANSITION

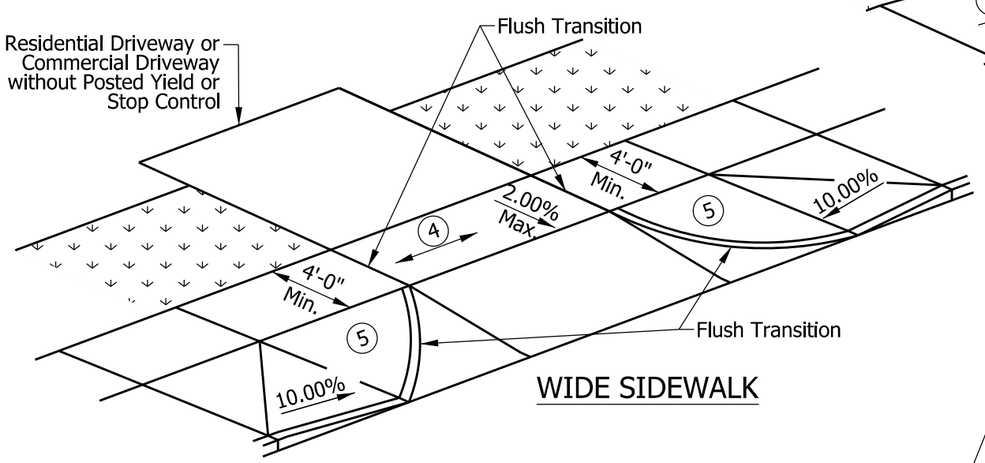

WIDE SIDEWALK

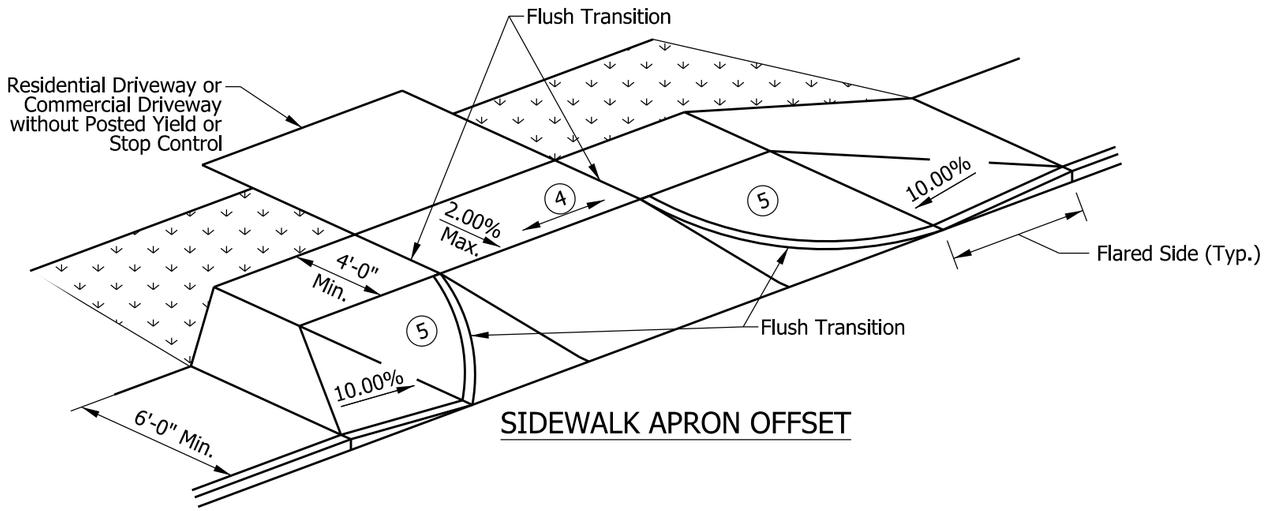

SIDEWALK APRON OFFSET

NOTES:

1. All slopes are absolute rather than relative to the sidewalk or roadway grade. Slopes at least 0.50% less than the maximum are preferred.

2. A sidewalk driveway crossing shall only be used on a sidewalk at a residential driveway or a commercial driveway without posted yield or stop control. A curb ramp shall be used at all other crossings. See Standard Drawing Series E 604-SWCR for curb ramp details.

(3) Where a sidewalk transition is used to lower or raise the sidewalk to connect with a residential driveway or commercial driveway without posted yield or stop control, the running slope of the transition shall be 8.33% maximum.

(4) The grade of the sidewalk across the driveway shall not exceed the grade of the adjacent roadway.

(5) The area between the driveway and a flared side or sidewalk transition shall match the driveway profile and transverse slope.

6. A turning space is not required at the top of a sidewalk transition.

(7) Objects such as a utility cover, vault frame, and grating shall be placed outside a sidewalk transition.

8. A detectable warning surface shall not be placed at the crossings of a residential driveway. A detectable warning surface may be placed at the crossing of a commercial driveway without yield or stop control.

9. See Standard Drawing E 604-SDWK-01 and -02 for Sidewalk Details.

10. See Standard Drawing Series E 610-DRIV for drives.

INDIANA DEPARTMENT OF TRANSPORTATION

SIDEWALK DRIVEWAY CROSSING

SEPTEMBER 2016

STANDARD DRAWING NO. E 604-SDWK-03

ELIZABETH W. PHILLIPS
REGISTERED
No. 10200124
STATE OF INDIANA
PROFESSIONAL ENGINEER

/s/ Elizabeth W. Phillips 03/16/16
DESIGN STANDARDS ENGINEER DATE

/s/ Mark A. Miller 03/18/16
CHIEF ENGINEER DATE

INDEX	
SHEET NO.	SUBJECT
1	Curb Ramp Drawing Index and General Notes
2-3	Perpendicular Curb Ramp Typical Placement
4	Perpendicular Curb Ramp Component Details
5	One-Way-Directional Perpendicular Curb Ramp Typical Placement
6	One-Way-Directional Perpendicular Curb Ramp Component Details
7	Parallel Curb Ramps Typical Placement
8	Parallel Curb Ramp Component Details
9	Blended Transition Curb Ramp, Depressed Curb Ramp and Diagonal Curb Ramp Typical Placement
10	Blended Transition Curb Ramp Component Details
11	Median Cut-Through and Median Perpendicular Curb Ramp Typical Placement
12-13	Detectable Warning Surface Placement and Configuration
14	Detectable Warning Surface Details

GENERAL NOTES:

1. All slopes are absolute rather than relative to the sidewalk or roadway grade. Slopes at least 0.50% less than the maximum are preferred.

2. Ramp or Blended Transition. A ramp or blended transition shall be used to lower or raise the sidewalk to connect with the street or highway.

3. Turning Space. A turning space shall be provided at the top of a perpendicular ramp, bottom of a parallel ramp, or where the pedestrian travel requires a change in direction. A common turning space may be shared by adjacent ramps. The turning space shall have a minimum clear dimension of 4 ft x 4 ft. Where the turning space is constrained at the back of the sidewalk by a curb, retaining wall, building, or feature over 2 inches in height, the minimum clear dimension shall be 4 ft x 5 ft, with the 5-ft dimension in the direction of the ramp running slope.

4. Flared Side. A flared side shall be used adjacent to a walkable surface. A flared side may be used adjacent to a non-walkable surface. A flared side shall have a maximum slope of 10.00% measured parallel to the back of the curb.

5. Return Curb. A return curb is placed perpendicular to the roadway curb. A return curb may be used adjacent to a non-walkable surface. A return curb shall not be used adjacent to a walkable surface. The return curb may be omitted where the non-walkable surface is flared and the curb adjacent the roadway is tapered to meet the flush curb at the bottom of the ramp.

6. Clear Space. A clear space shall be provided beyond the bottom grade break of a curb ramp wholly contained within the crosswalk and wholly outside the parallel vehicular travel path. The clear space shall have a minimum clear dimension of 4 ft x 4 ft.

7. Detectable Warning Surface. A detectable warning surface shall consist of truncated domes and be placed at each street, highway, or railroad crossing. The detectable warning surface shall extend a minimum of 2 ft in the direction of pedestrian travel and be placed the entire width of a ramp, blended transition, or turning space.

8. Running Slope. The running slope of a ramp, blended transition, or turning space shall be measured parallel to the direction of pedestrian travel.
   a. A running slope of 2.00% or less is considered level.
   b. A ramp shall have a maximum running slope of 8.33% but shall not require a ramp length to exceed 15 ft.
   c. A blended transition shall have a maximum running slope of 5.00%.
   d. A turning space shall have a maximum running slope of 2.00%.

9. Width. Unless otherwise noted, minimum width of a ramp, blended transition, or turning space, excluding flared sides or return curb, shall be 4 ft.

10. Grade Break. A grade break at the top and bottom of a ramp, blended transition, or turning space shall be perpendicular to the running slope. Grade breaks shall not be within the ramp, blended transition, turning space, or detectable warning surface. Grade breaks shall be flush. Vertical discontinuities shall not be greater than 1/2 in. Where a discontinuity is greater than 1/4 in. the surface shall be beveled with a slope not steeper than 1V:2H.

11. Cross Slope Exceptions. The cross slope of a ramp, blended transition, or turning space shall be measured perpendicular to the direction of pedestrian travel.
   a. The maximum cross slope at a pedestrian street crossing without posted yield or stop control shall be 5.00%.
   b. The maximum cross slope at a pedestrian street crossing with posted yield or stop control shall be 2.00%.
   c. The maximum cross slope at a midblock crossing shall be the established grade of the adjacent roadway.

12. Counter Slope. A counter slope is the cross slope of the gutter or street adjacent the running slope of the ramp, blended transition, or turning space. See Standard Drawing E 604-SWCR-14 for counter slope details.

13. Objects such as a utility cover, vault frame, and grating shall be placed outside the curb ramp.

14. Curb ramps shall be placed within the marked crosswalk area.

15. Drainage inlets should be located uphill from a curb ramp to prevent ponding in the path of pedestrian travel.

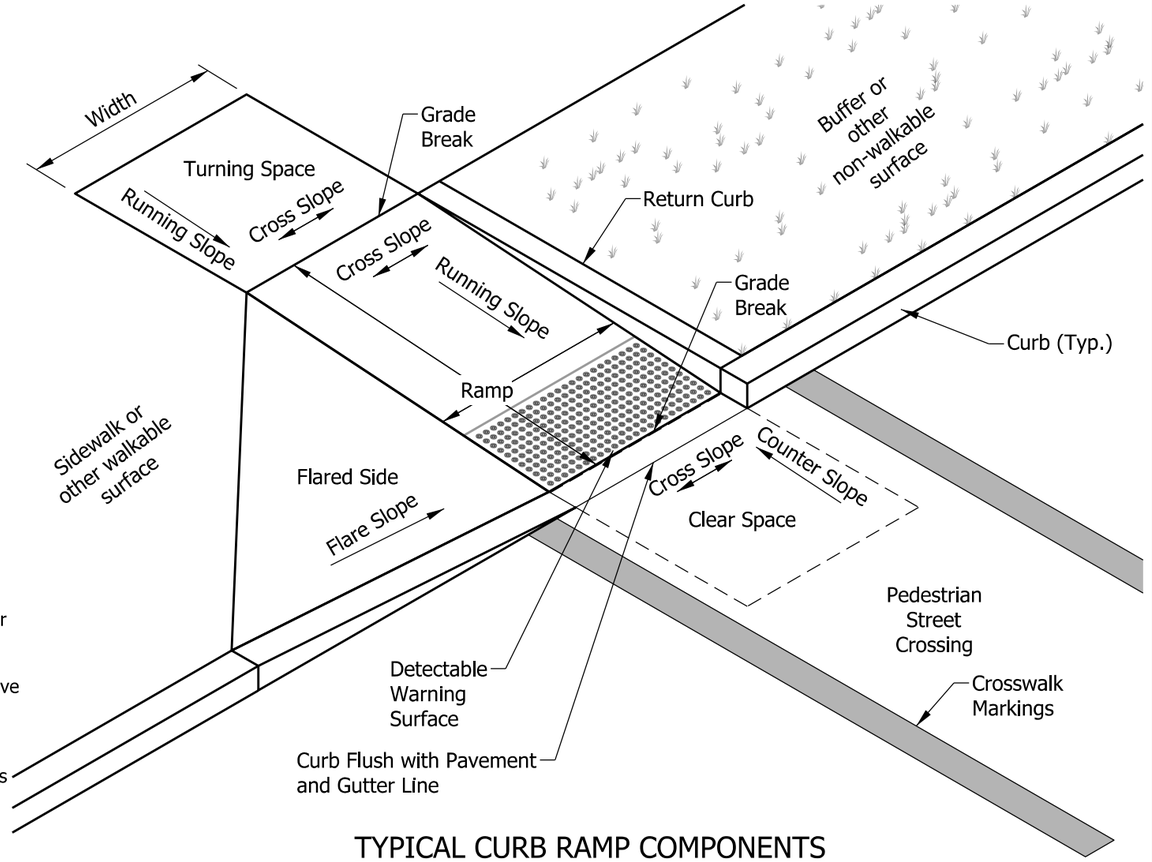

TYPICAL CURB RAMP COMPONENTS

INDIANA DEPARTMENT OF TRANSPORTATION

CURB RAMP DRAWING INDEX AND GENERAL NOTES

SEPTEMBER 2018

STANDARD DRAWING NO. E 604-SWCR-01

ELIZABETH W. PHILLIPS REGISTERED No. 10200124 STATE OF INDIANA PROFESSIONAL ENGINEER

/s/ Elizabeth W. Phillips 03/20/18
DESIGN STANDARDS ENGINEER DATE

/s/ John Leckie 04/25/18
CHIEF ENGINEER DATE

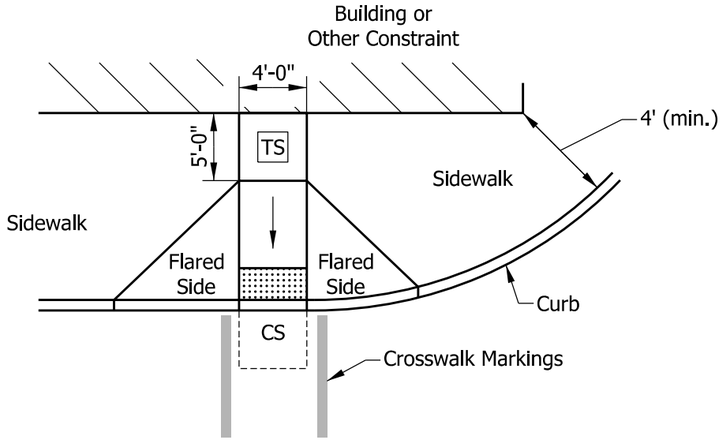

PERPENDICULAR CURB RAMP
ADJACENT WALKABLE SURFACE

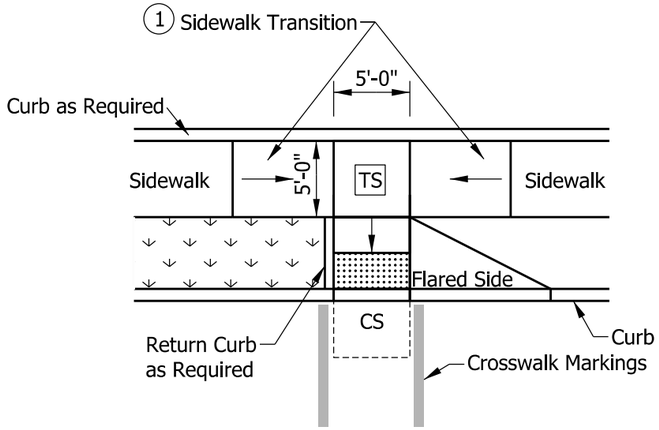

TIERED PERPENDICULAR CURB RAMP

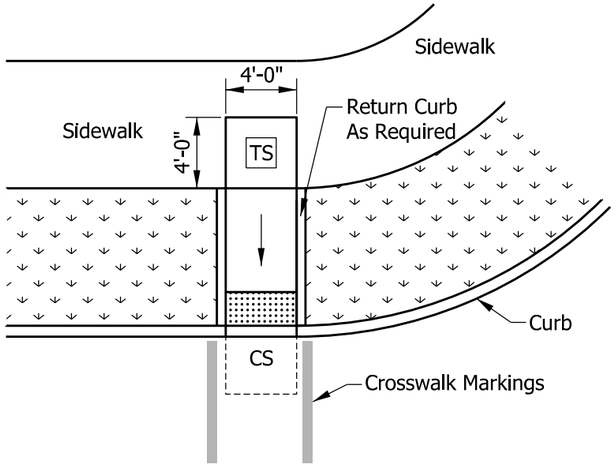

PERPENDICULAR CURB RAMP
ADJACENT NON-WALKABLE SURFACE

NOTES:

1. Where insufficient width between the curb and back of sidewalk prevent a standard perpendicular curb ramp running slope, a sidewalk transition may be used to lower the sidewalk grade. The sidewalk transition running slope shall not exceed 8.33%. See Standard Drawing Series E 604-SDWK for sidewalk details.

2. The turning space shall have a minimum clear dimension of 4 ft x 4 ft and a running slope of 2.00% maximum. Where the turning space is constrained at the back of the sidewalk, the minimum clear dimension shall be 4 ft x 5 ft, with the 5-ft dimension in the direction of the ramp running slope.

LEGEND:

- Buffer or Other Non-Walkable Surface
- Ramp
- Detectable Warning Surface
- TS — Turning Space
- CS — Clear Space

INDIANA DEPARTMENT OF TRANSPORTATION

PERPENDICULAR CURB RAMP
TYPICAL PLACEMENT

SEPTEMBER 2018

STANDARD DRAWING NO. E 604-SWCR-02

ELIZABETH W. PHILLIPS
REGISTERED
No. 10200124
STATE OF INDIANA
PROFESSIONAL ENGINEER

/s/ Elizabeth W. Phillips 03/29/18
DESIGN STANDARDS ENGINEER DATE

/s/ John Leckie 04/25/18
CHIEF ENGINEER DATE

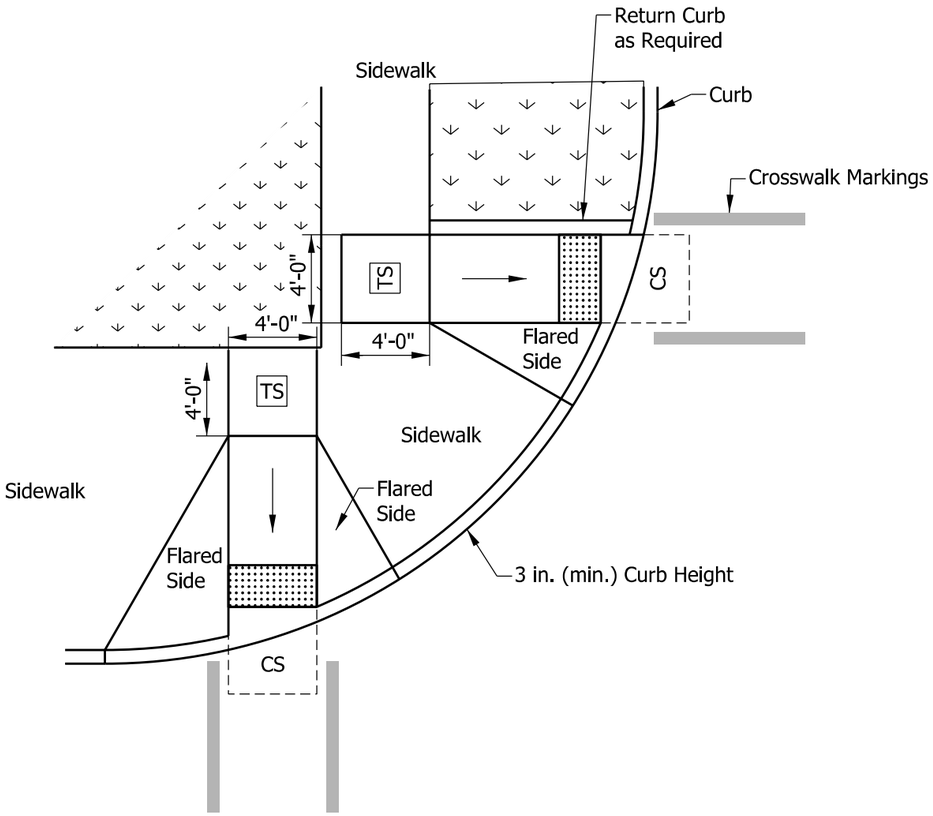

PAIRED PERPENDICULAR
CURB RAMPS AT LARGE RADIUS

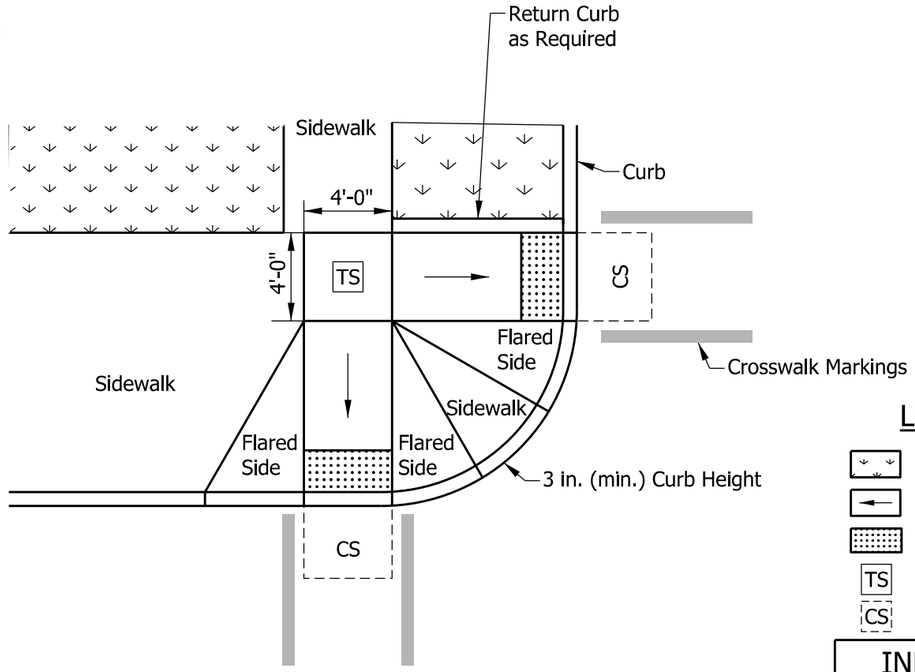

PAIRED PERPENDICULAR
CURB RAMPS AT SMALL RADIUS

NOTE:

1. The turning space shall have a minimum clear dimension of 4 ft x 4 ft and a running slope of 2.00% maximum. Where the turning space is constrained at the back of the sidewalk, the minimum clear dimension shall be 4 ft x 5 ft, with the 5-ft dimension in the direction of the ramp running slope.

LEGEND:

- Buffer or Other Non-Walkable Surface
- Ramp
- Detectable Warning Surface
- TS — Turning Space
- CS — Clear Space

INDIANA DEPARTMENT OF TRANSPORTATION

PAIRED PERPENDICULAR CURB RAMPS
TYPICAL PLACEMENT

SEPTEMBER 2016

STANDARD DRAWING NO. E 604-SWCR-03

ELIZABETH W. PHILLIPS
REGISTERED
No. 10200124
STATE OF INDIANA
PROFESSIONAL ENGINEER

/s/ Elizabeth W. Phillips 03/15/16
DESIGN STANDARDS ENGINEER DATE

/s/ Mark A. Miller 03/18/16
CHIEF ENGINEER DATE

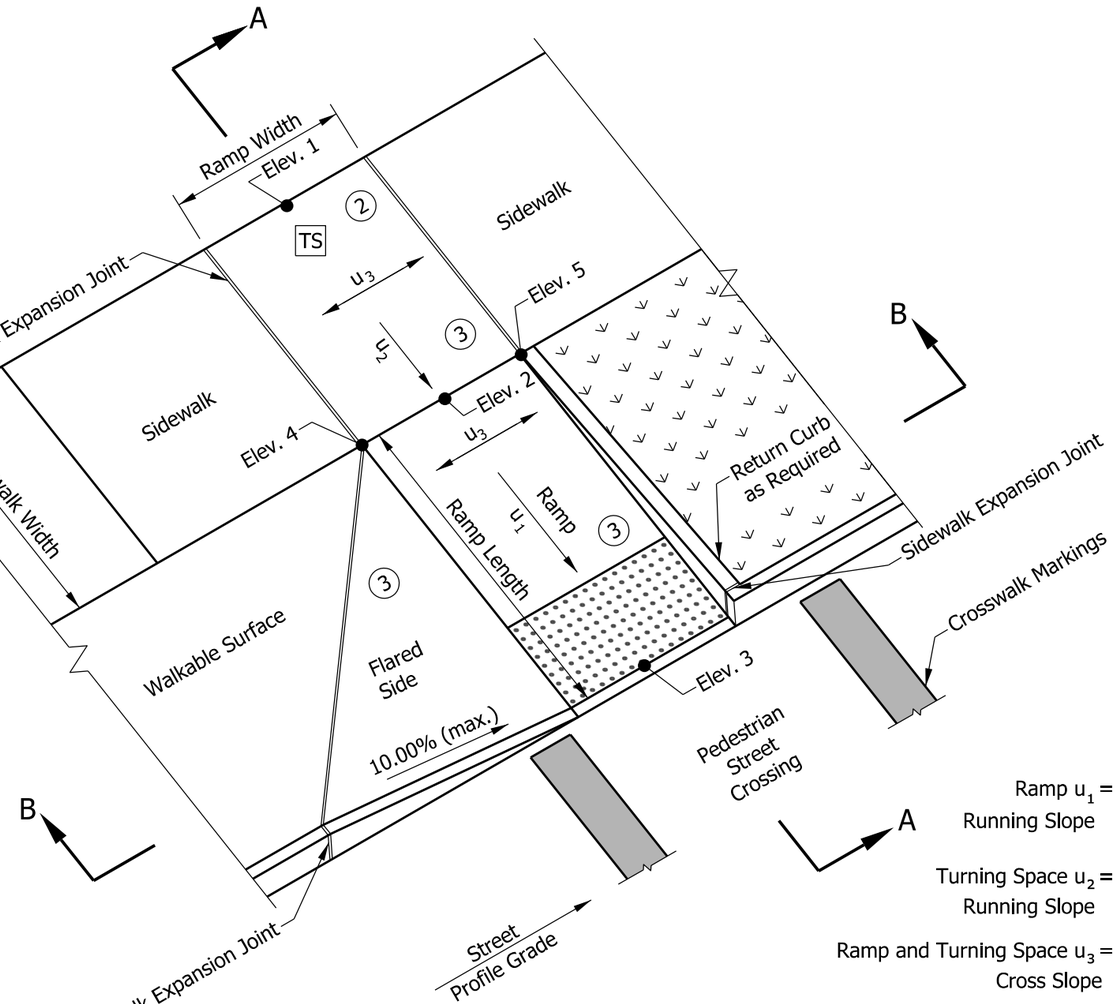

Component Slope Equations:

Ramp u_1 = Running Slope	$\frac{\lvert \text{Elev. 2} - \text{Elev. 3} \rvert}{\text{Ramp Length}}$	≤ 8.33%
Turning Space u_2 = Running Slope	$\frac{\lvert \text{Elev. 1} - \text{Elev. 2} \rvert}{\text{Sidewalk Width}}$	≤ 2.00%
Ramp and Turning Space u_3 = Cross Slope	$\frac{\lvert \text{Elev. 4} - \text{Elev. 5} \rvert}{\text{Ramp or Turning Space Width}}$	≤ 2.00% ④

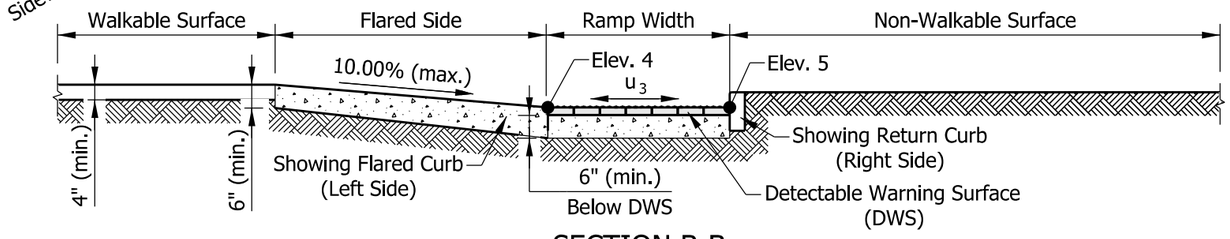

SECTION B-B

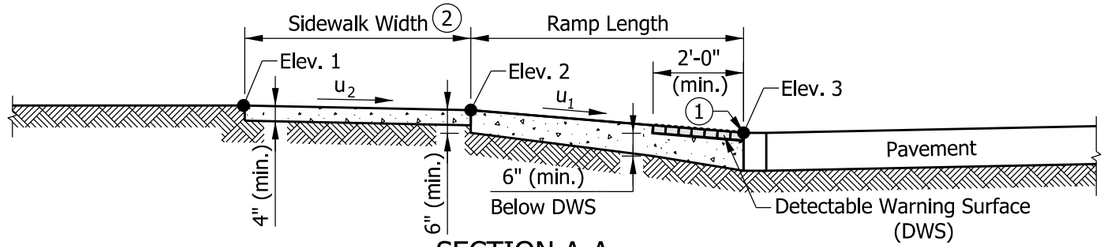

SECTION A-A

NOTES:

1. The bottom edge of the ramp and top of curb shall be flush with the edge of adjacent pavement and gutter line.
2. The turning space shall have a minimum clear dimension of 4 ft x 4 ft. Where the turning space is constrained at the back of the sidewalk, the minimum clear dimension shall be 4 ft x 5 ft, with the 5-ft dimension in the direction of the ramp running slope. Where a tiered perpendicular curb ramp is used, a constrained turning space shall have a minimum clear dimension of 5 ft x 5 ft.
3. Curb ramp surface shall be coarse broomed transverse to the running slope.
4. See Standard Drawing E 604-SWCR-01 for cross slope exceptions.
5. See Standard Drawing E 604-SWCR-12, -13, and -14 for Detectable Warning Surface placement, configuration, and details.
6. See Standard Drawing E 604-CCSJ-01 for sidewalk expansion joint details.

LEGEND:

- Buffer or Other Non-Walkable Surface
- Ramp
- Detectable Warning Surface
- TS — Turning Space

INDIANA DEPARTMENT OF TRANSPORTATION

PERPENDICULAR CURB RAMP COMPONENT DETAILS

SEPTEMBER 2018

STANDARD DRAWING NO. E 604-SWCR-04

ELIZABETH W. PHILLIPS — REGISTERED — No. 10200124 — STATE OF INDIANA — PROFESSIONAL ENGINEER

/s/ Elizabeth W. Phillips 03/29/18
DESIGN STANDARDS ENGINEER DATE

/s/ John Leckie 04/25/18
CHIEF ENGINEER DATE

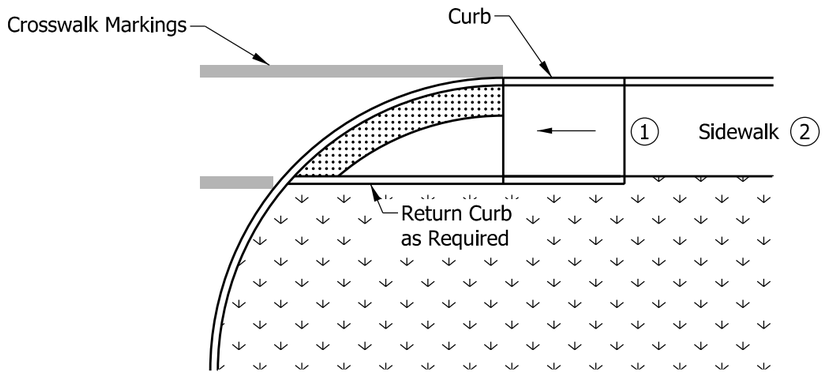

ONE-WAY DIRECTIONAL PERPENDICULAR CURB RAMP ADJACENT CURB

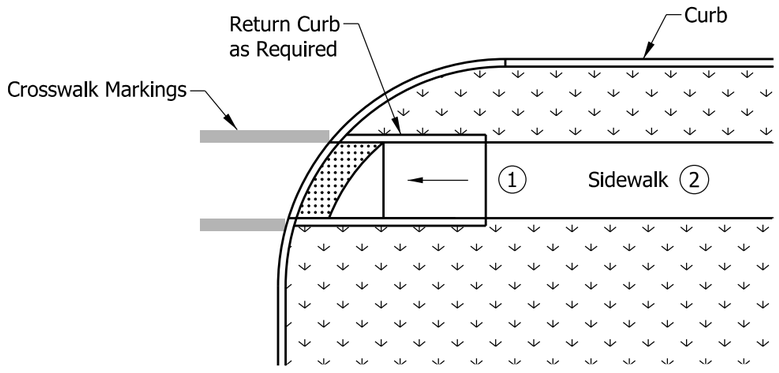

ONE-WAY DIRECTIONAL PERPENDICULAR CURB RAMP WITH BUFFER

NOTES:

1. A turning space is not required at the top of the ramp for a one-way directional perpendicular curb ramp.
2. Where there is no buffer between the sidewalk and curb the preferred minimum sidewalk width is 6 ft. Where a buffer is placed between the sidewalk and curb, the preferred minimum sidewalk width is 5 ft. See Standard Drawing Series E 604-SDWK for sidewalk details.

LEGEND:

- Buffer or Other Non-Walkable Surface
- Ramp
- Detectable Warning Surface

INDIANA DEPARTMENT OF TRANSPORTATION

ONE-WAY DIRECTIONAL
PERPENDICULAR CURB RAMP
TYPICAL PLACEMENT
SEPTEMBER 2016

STANDARD DRAWING NO. E 604-SWCR-05

ELIZABETH W. PHILLIPS
REGISTERED
No.
10200124
STATE OF
INDIANA
PROFESSIONAL ENGINEER

/s/ Elizabeth W. Phillips 03/15/16
DESIGN STANDARDS ENGINEER DATE

/s/ Mark A. Miller 03/18/16
CHIEF ENGINEER DATE

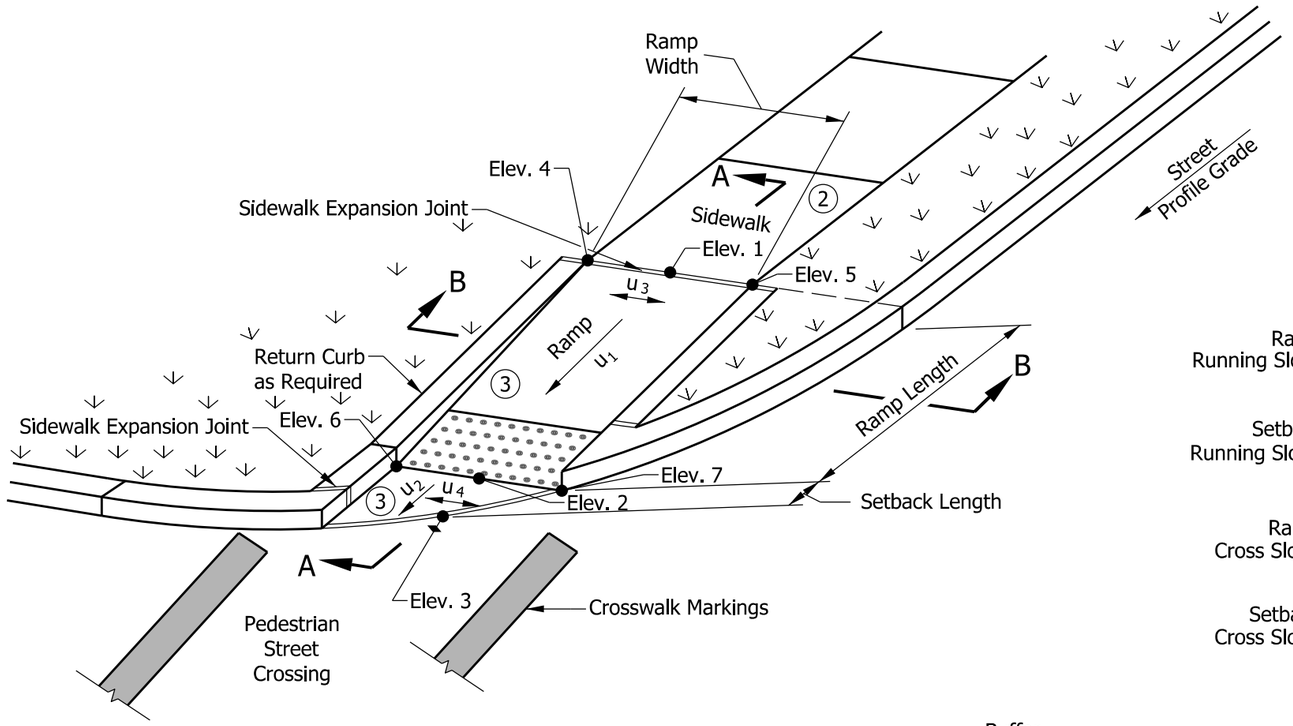

Component Slope Equations:

Ramp u_1 Running Slope $= \frac{|\text{Elev. 1} - \text{Elev. 2}|}{\text{Ramp Length}} \leq 8.33\%$

Setback u_2 Running Slope $= \frac{|\text{Elev. 2} - \text{Elev. 3}|}{\text{Setback Length}} \leq$ Profile Grade of Adjacent Street

Ramp u_3 Cross Slope $= \frac{|\text{Elev. 4} - \text{Elev. 5}|}{\text{Ramp Width}} \leq 2.00\%$ (4)

Setback u_4 Cross Slope $= \frac{|\text{Elev. 6} - \text{Elev. 7}|}{\text{Ramp Width}} \leq 2.00\%$ (4)

NOTES:

1. The bottom edge of the ramp or setback and top of curb shall be flush with the edge of adjacent pavement and gutter line.
2. A turning space is not required at the top of the ramp for a one-way directional perpendicular curb ramp.
3. Curb ramp surface shall be coarse broomed transverse to the running slope.
4. See Standard Drawing E 604-SWCR-01 for cross slope exceptions.
5. See Standard Drawing E 604-SWCR-12, -13, and -14 for Detectable Warning Surface placement, configuration, and details.
6. See Standard Drawing E 604-CCSJ-01 for sidewalk expansion joint details.

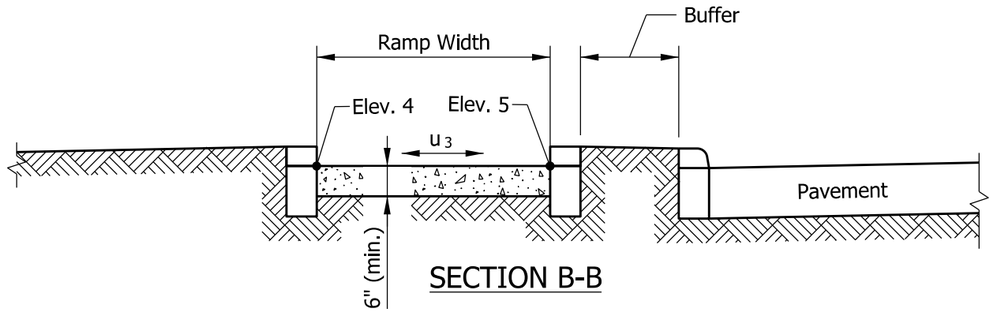

SECTION B-B

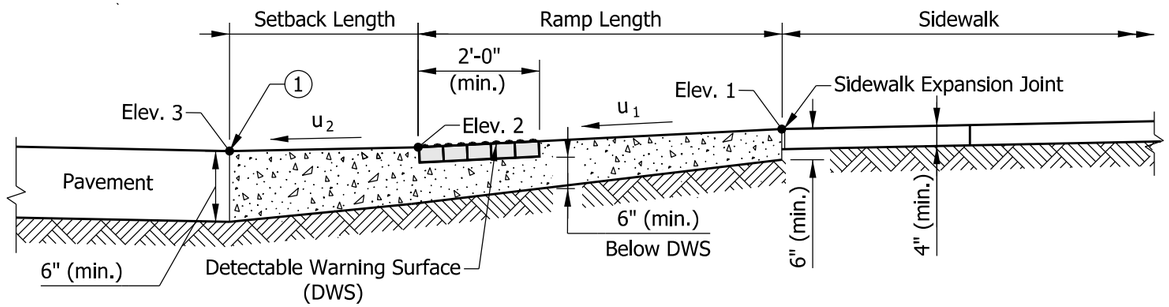

SECTION A-A

LEGEND:

- Buffer or Other Non-Walkable Surface
- Ramp
- Detectable Warning Surface

INDIANA DEPARTMENT OF TRANSPORTATION

ONE-WAY DIRECTIONAL PERPENDICULAR CURB RAMP COMPONENT DETAILS

SEPTEMBER 2018

STANDARD DRAWING NO. E 604-SWCR-06

ELIZABETH W. PHILLIPS
REGISTERED
No. 10200124
STATE OF INDIANA
PROFESSIONAL ENGINEER

/s/ Elizabeth W. Phillips 03/29/18
DESIGN STANDARDS ENGINEER DATE

/s/ John Leckie 04/25/18
CHIEF ENGINEER DATE

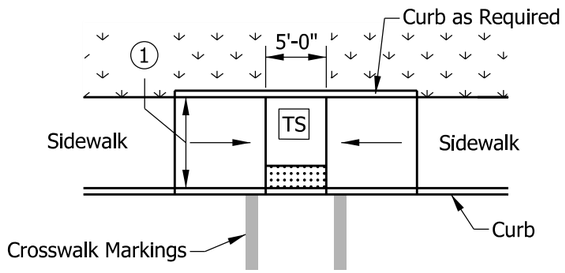

MIDBLOCK CROSSING CURB RAMP

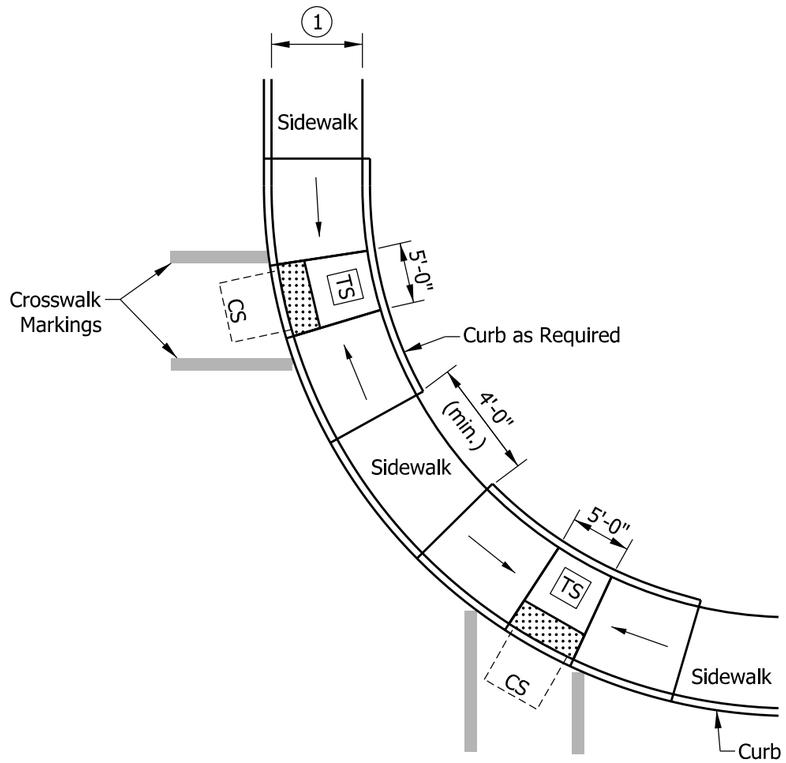

PAIRED PARALLEL CURB RAMPS ALONG LARGE RADIUS

NOTES:

1. Where there is no buffer between the sidewalk and curb the preferred minimum sidewalk width is 6 ft. Where a buffer is placed between the sidewalk and curb, the preferred minimum sidewalk width is 5 ft. See Standard Drawing Series E 604-SDWK for sidewalk details.

2. The turning space shall have a minimum clear dimension of 4 ft x 4 ft and a running slope of 2.00% maximum. Where the turning space is constrained at the back of the sidewalk, the minimum clear dimension shall be 4 ft x 5 ft, with the 5-ft dimension in the direction of the ramp running slope.

LEGEND:

- Buffer or Other Non-Walkable Surface
- Ramp
- Detectable Warning Surface
- TS — Turning Space
- CS — Clear Space

INDIANA DEPARTMENT OF TRANSPORTATION

PAIRED PARALLEL CURB RAMPS AND
MIDBLOCK CROSSING CURB RAMP
TYPICAL PLACEMENT

SEPTEMBER 2016

STANDARD DRAWING NO. E 604-SWCR-07

ELIZABETH W. PHILLIPS
REGISTERED
No. 10200124
STATE OF INDIANA
PROFESSIONAL ENGINEER

/s/ Elizabeth W. Phillips 03/15/16
DESIGN STANDARDS ENGINEER DATE

/s/ Mark A. Miller 03/18/16
CHIEF ENGINEER DATE

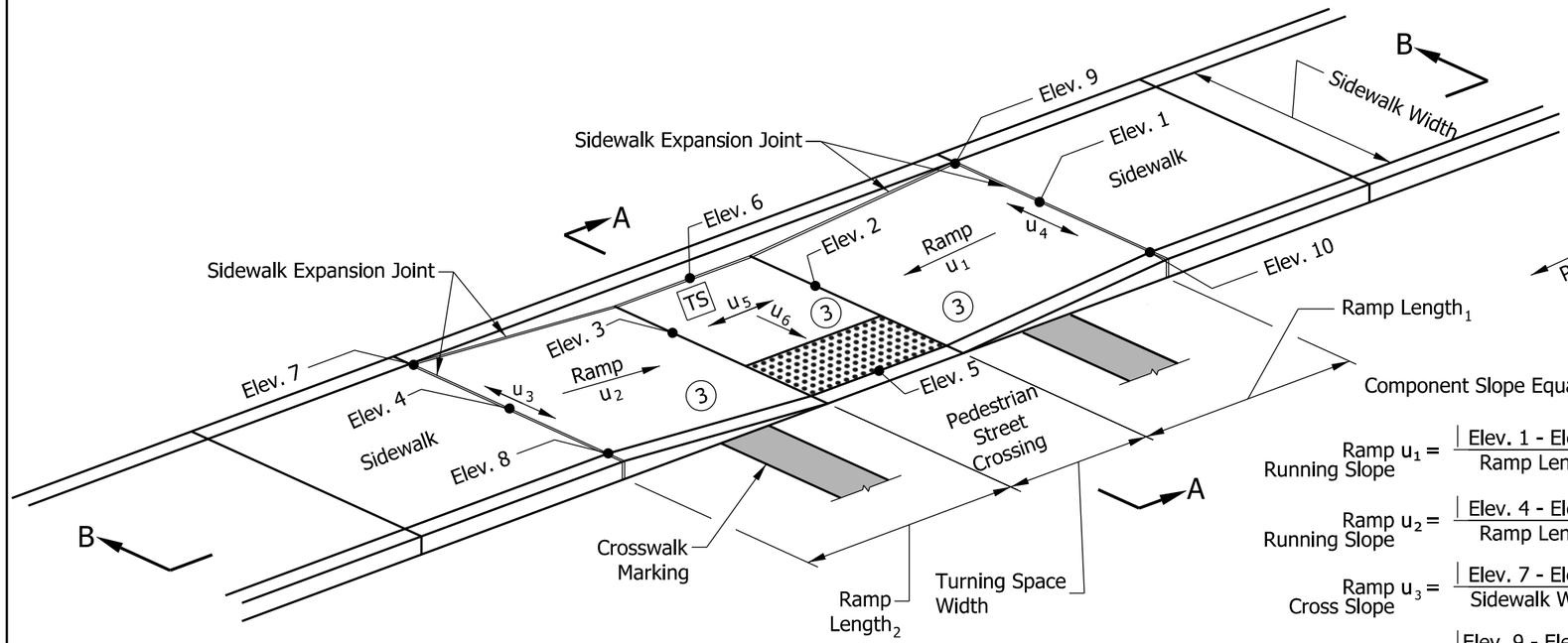

Component Slope Equations:

$$\text{Ramp } u_1 \text{ Running Slope} = \frac{|\text{Elev. 1} - \text{Elev. 2}|}{\text{Ramp Length}_1} \leq 8.33\%$$

$$\text{Ramp } u_2 \text{ Running Slope} = \frac{|\text{Elev. 4} - \text{Elev. 3}|}{\text{Ramp Length}_2} \leq 8.33\%$$

$$\text{Ramp } u_3 \text{ Cross Slope} = \frac{|\text{Elev. 7} - \text{Elev. 8}|}{\text{Sidewalk Width}} \leq 2.00\%$$

$$\text{Ramp } u_4 \text{ Cross Slope} = \frac{|\text{Elev. 9} - \text{Elev. 10}|}{\text{Sidewalk Width}} \leq 2.00\%$$

$$\text{Turning Space Cross Slope } u_5 = \frac{|\text{Elev. 2} - \text{Elev. 3}|}{\text{Turning Space Width}} \leq 2.00\% \ (5)$$

$$\text{Turning Space Running Slope } u_6 = \frac{|\text{Elev. 6} - \text{Elev. 5}|}{\text{Sidewalk Width}} \leq 2.00\%$$

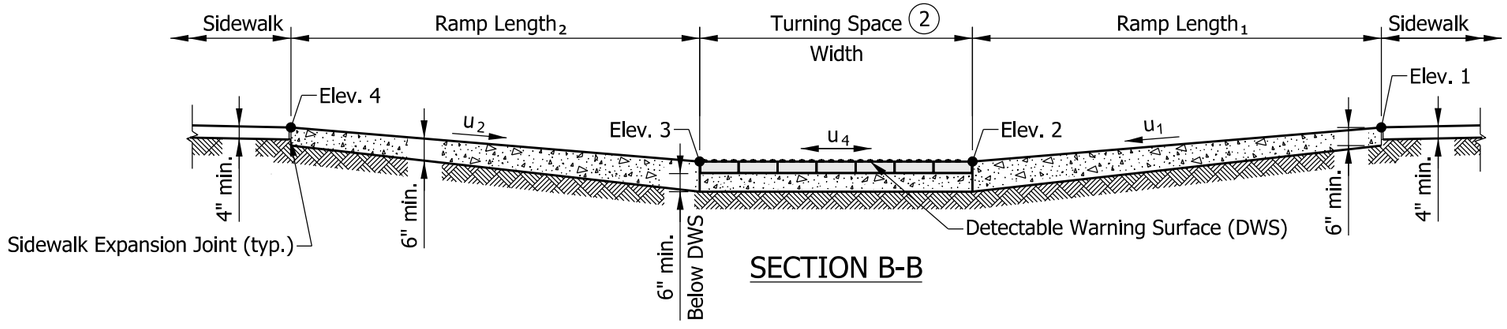

SECTION B-B

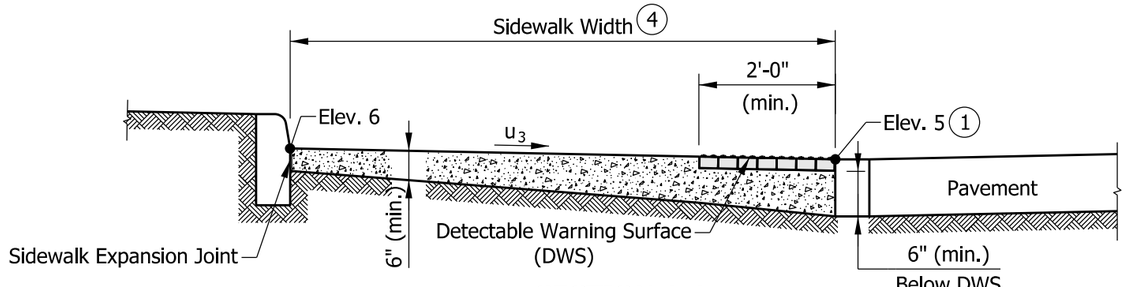

SECTION A-A

NOTES:

1. The bottom edge of the turning space and top of curb shall be flush with the edge of adjacent pavement and gutter line.
2. The turning space shall have a minimum clear dimension of 4 ft x 4 ft and a running slope of 2.00% maximum. Where the turning space is constrained at the back of the sidewalk, the minimum clear dimension shall be 4 ft x 5 ft, with the 5-ft dimension in the direction of the ramp running slope.
3. Curb ramp surface shall be coarse broomed transverse to the running slope.
4. Where there is no buffer between the sidewalk and curb, the preferred minimum sidewalk width is 6 ft. Where a buffer is placed between the sidewalk and curb, the preferred minimum sidewalk width is 5 ft. See Standard Drawing Series E 604-SDWK for sidewalk details.
5. See Standard Drawing E 604-SWCR-01 for cross slope exceptions.
6. See Standard Drawing E 604-SWCR-12, -13, and -14 for Detectable Warning Surface placement, configuration, and details.
7. See Standard Drawing E 604-CCSJ-01 for sidewalk expansion joint details.

LEGEND:

- Ramp
- Detectable Warning Surface
- TS — Turning Space

INDIANA DEPARTMENT OF TRANSPORTATION

PARALLEL CURB RAMP COMPONENT DETAILS

SEPTEMBER 2018

STANDARD DRAWING NO. E 604-SWCR-08

ELIZABETH W. PHILLIPS
REGISTERED
No. 10200124
STATE OF INDIANA
PROFESSIONAL ENGINEER

/s/ Elizabeth W. Phillips 03/29/18
DESIGN STANDARDS ENGINEER DATE

/s/ John Leckie 04/25/18
CHIEF ENGINEER DATE

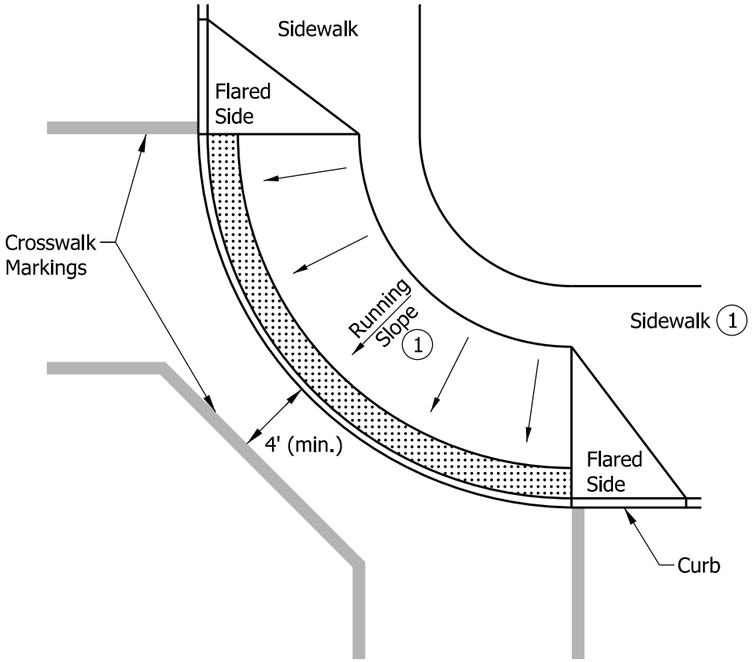

BLENDED TRANSITION CURB RAMP
WITH RUNNING SLOPE > 2.00%

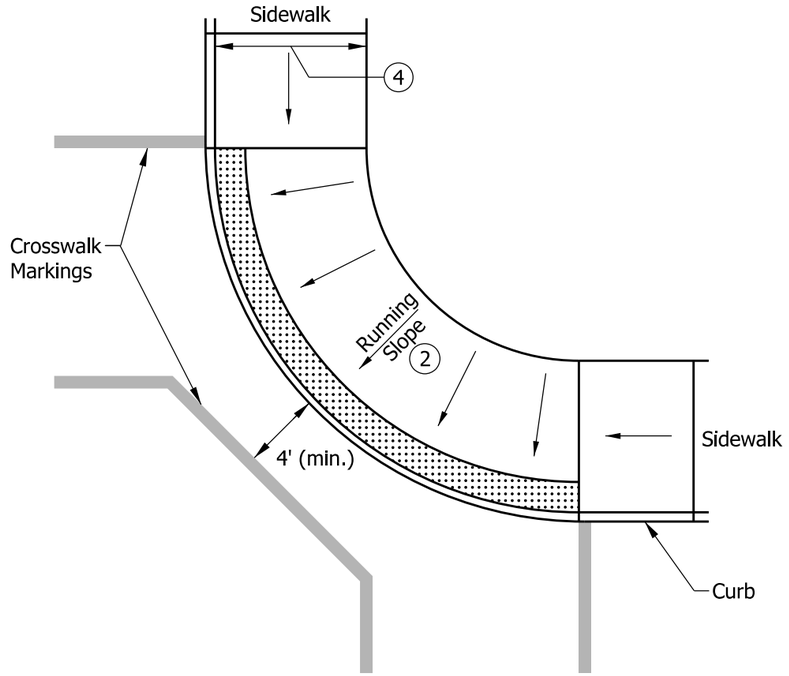

BLENDED TRANSITION CURB RAMP
WITH RUNNING SLOPE ≤ 2.00%

NOTES:

(1) Where the running slope is greater than 2.00%, a 4-ft minimum sidewalk shall continue behind the blended transition. The running slope shall not exceed 5.00%.

(2) Where the running slope is less than or equal to 2.00% a 4-ft minimum sidewalk is not required behind the blended transition.

(3) A diagonal curb ramp shall not be used for new construction. For an alteration project, a diagonal curb ramp shall be used only where existing physical conditions prevent paired curb ramps, a blended transition curb ramp, or a depressed corner curb ramp from being provided.

(4) Where there is no buffer between the sidewalk and curb the preferred minimum sidewalk width is 6 ft. Where a buffer is placed between the sidewalk and curb, the preferred minimum sidewalk width is 5 ft. See Standard Drawing Series E 604-SDWK for sidewalk details.

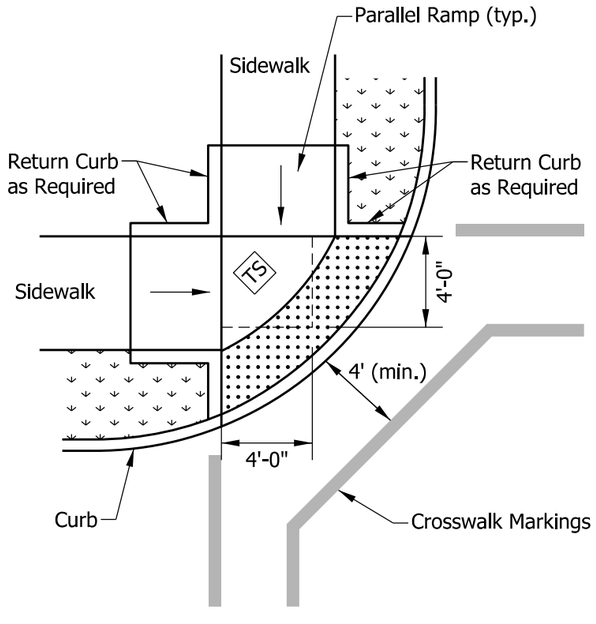

DEPRESSED CORNER CURB RAMP

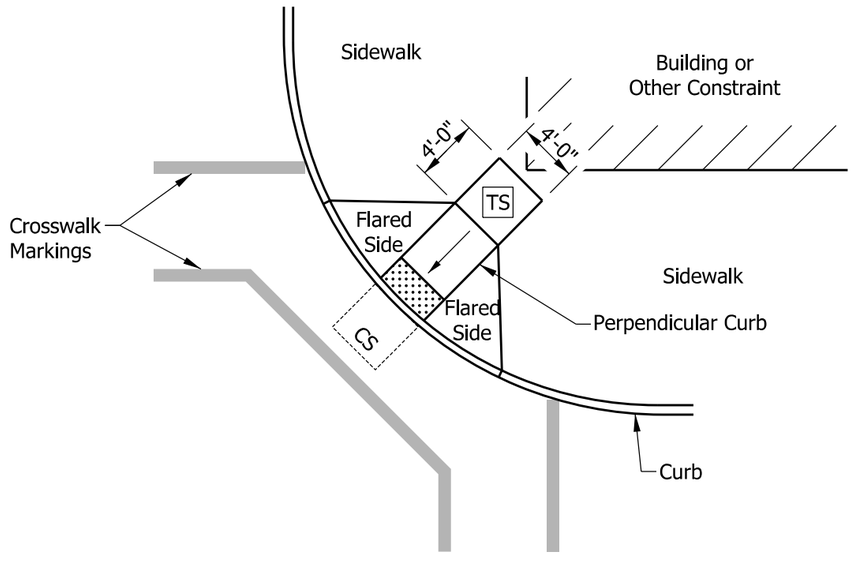

DIAGONAL CURB RAMP (3)

LEGEND:

- Buffer or Other Non-Walkable Surface
- Ramp
- Detectable Warning Surface
- TS — Turning Space
- CS — Clear Space

INDIANA DEPARTMENT OF TRANSPORTATION

BLENDED TRANSITION CURB RAMP, DEPRESSED CURB RAMP AND DIAGONAL CURB RAMP TYPICAL PLACEMENT

SEPTEMBER 2018

STANDARD DRAWING NO. E 604-SWCR-09

ELIZABETH W. PHILLIPS — REGISTERED — No. 10200124 — STATE OF INDIANA — PROFESSIONAL ENGINEER

/s/ Elizabeth W. Phillips 03/29/18
DESIGN STANDARDS ENGINEER DATE

/s/ John Leckie 04/25/18
CHIEF ENGINEER DATE

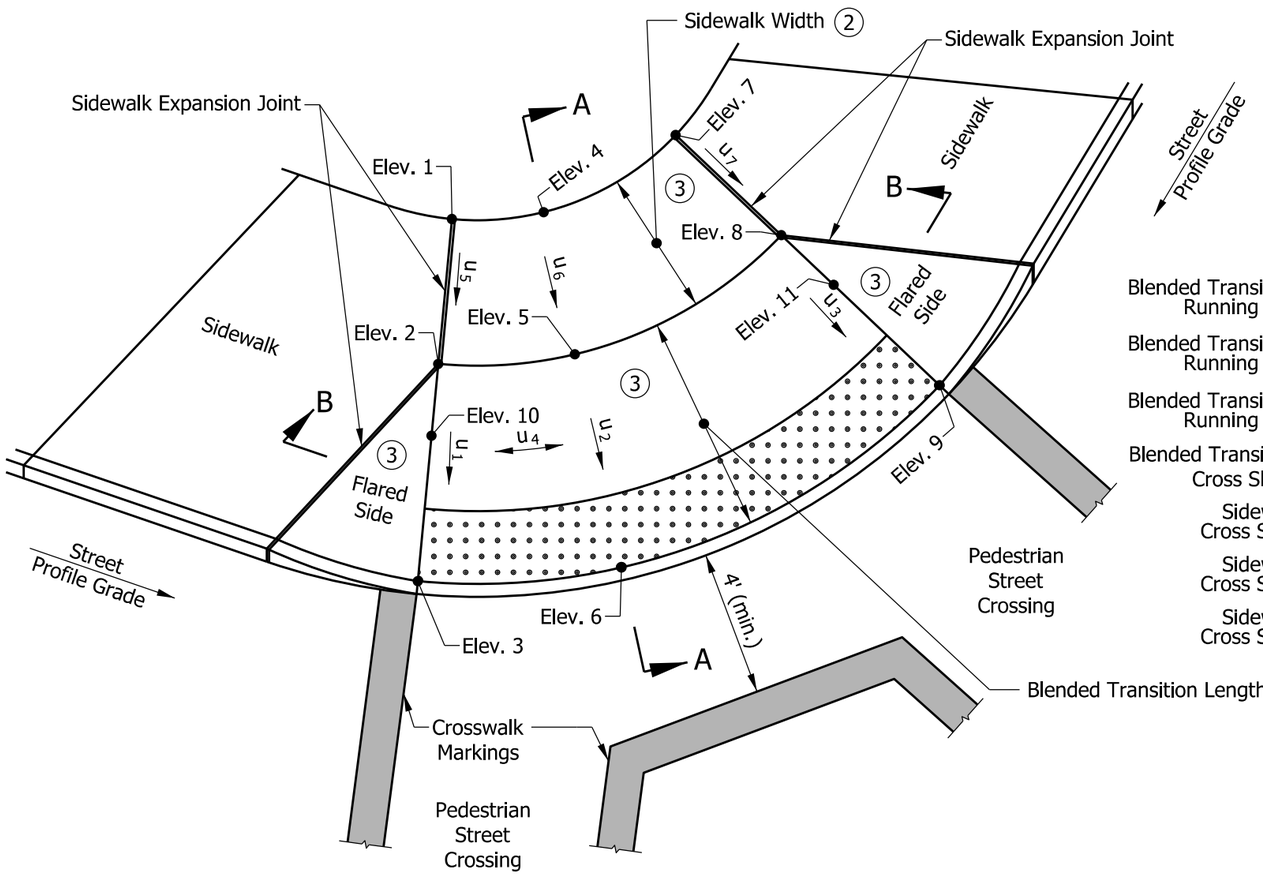

Component Slope Equations:

Blended Transition u_1 = Running Slope $= \frac{|\text{Elev. 2} - \text{Elev. 3}|}{\text{Blended Transition Length}} \leq 2.00\%$ (2)

Blended Transition u_2 = Running Slope $= \frac{|\text{Elev. 5} - \text{Elev. 6}|}{\text{Blended Transition Length}} \leq 2.00\%$ (2)

Blended Transition u_3 = Running Slope $= \frac{|\text{Elev. 8} - \text{Elev. 9}|}{\text{Blended Transition Length}} \leq 2.00\%$ (2)

Blended Transition u_4 = Cross Slope $= \frac{|\text{Elev. 10} - \text{Elev. 11}|}{\text{Blended Transition Width}} \leq 2.00\%$ (4)

Sidewalk u_5 = Cross Slope $= \frac{|\text{Elev. 1} - \text{Elev. 2}|}{\text{Sidewalk Width}} \leq 2.00\%$

Sidewalk u_6 = Cross Slope $= \frac{|\text{Elev. 4} - \text{Elev. 5}|}{\text{Sidewalk Width}} \leq 2.00\%$

Sidewalk u_7 = Cross Slope $= \frac{|\text{Elev. 7} - \text{Elev. 8}|}{\text{Sidewalk Width}} \leq 2.00\%$

NOTES:

1. The bottom edge of the blended transition and top of curb shall be flush with the edge of adjacent pavement and gutter line.
2. Where the running slope is less than or equal to 2.00% a 4-ft minimum sidewalk is not required, behind the blended transition. Where the running slope is greater than 2.00%, a 4-ft minimum sidewalk shall continue behind the blended transition and the running slope shall not exceed 5.00%.
3. Curb ramp surface shall be coarse broomed transverse to the running slope.
4. See Standard Drawing E 604-SWCR-01 for cross slope exceptions.
5. See Standard Drawing E 604-SWCR-12, -13, and -14 for Detectable Warning Surface placement, configuration, and details.
6. See Standard Drawing E 604-CCSJ-01 for sidewalk expansion joint details.

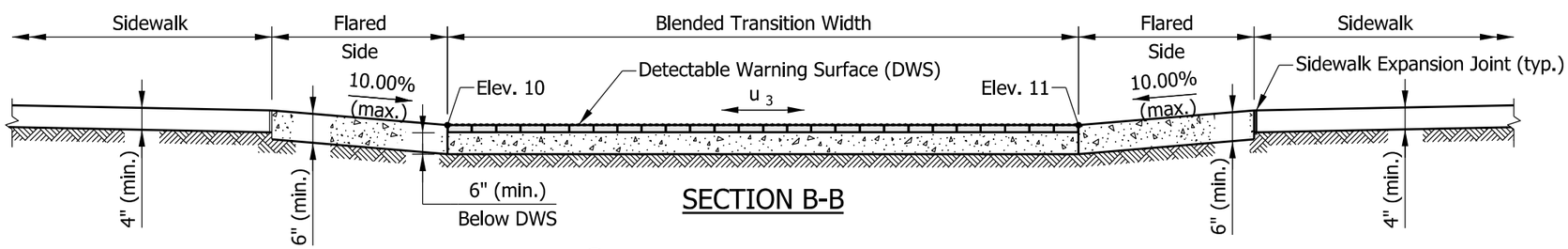

SECTION B-B

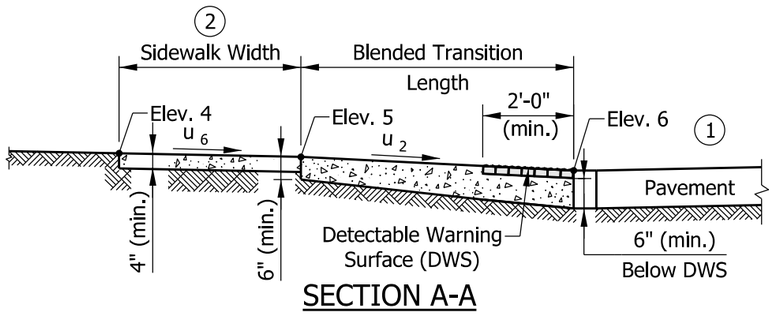

SECTION A-A

LEGEND:

Ramp

Detectable Warning Surface

INDIANA DEPARTMENT OF TRANSPORTATION

BLENDED TRANSITION CURB RAMP COMPONENT DETAILS

SEPTEMBER 2018

STANDARD DRAWING NO. E 604-SWCR-10

ELIZABETH W. PHILLIPS
REGISTERED
No. 10200124
STATE OF INDIANA
PROFESSIONAL ENGINEER

/s/ Elizabeth W. Phillips 03/29/18
DESIGN STANDARDS ENGINEER DATE

/s/ John Leckie 04/25/18
CHIEF ENGINEER DATE

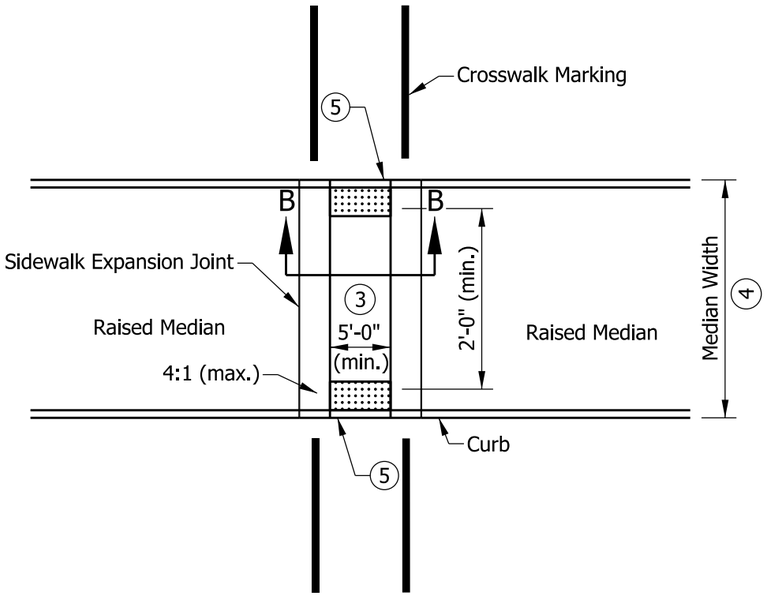

MEDIAN CUT-THROUGH
WITH TAPERED CURB

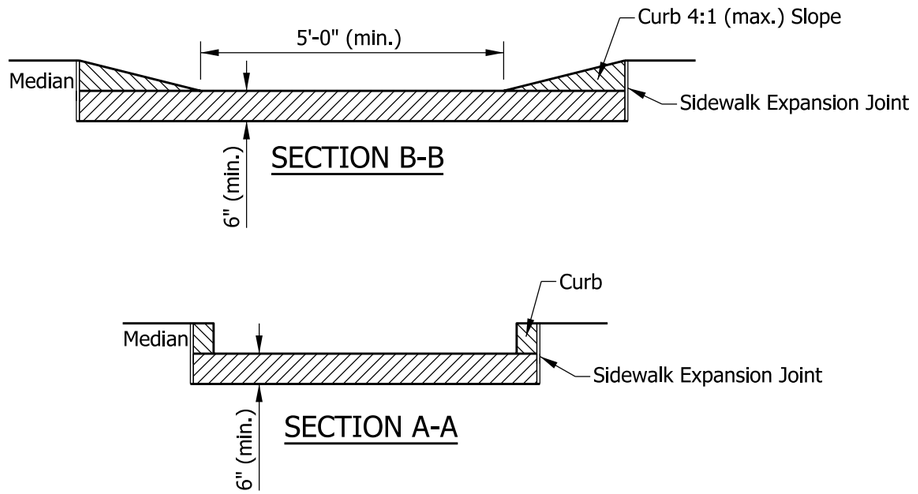

NOTES:

1. The minimum width of a median cut-through and median perpendicular curb ramp shall be 5 ft.
2. Where in-line or offset perpendicular curb ramps are used within a median, the turning space shall have a minimum clear dimension of 4 ft x 5 ft.
3. Where a median cut through is used the running slope shall be 5.00% maximum.
4. Where median width is less than 6 ft, detectable warning surfaces shall not be placed.
5. The bottom edge of the median cut-through or median perpendicular curb ramp and the top of curb shall be flush with the edge of adjacent pavement gutter line.
6. See Standard Drawing E 604-SWCR-01 for cross slope exceptions.
7. See Standard Drawing E 604-SWCR-12, -13, and -14 for Detectable Warning Surface placement, configuration, and details.
8. See Standard Drawing E 604-CCSJ-01 for sidewalk expansion joint details.

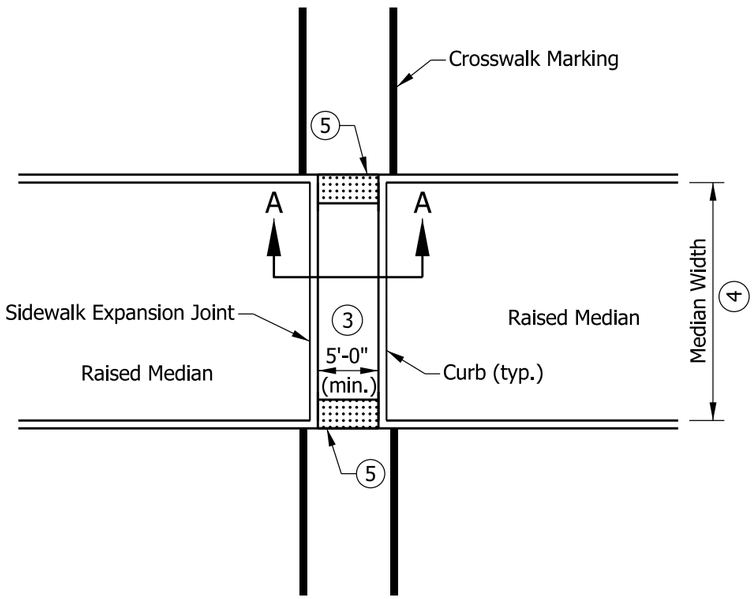

MEDIAN CUT-THROUGH
WITH CURB

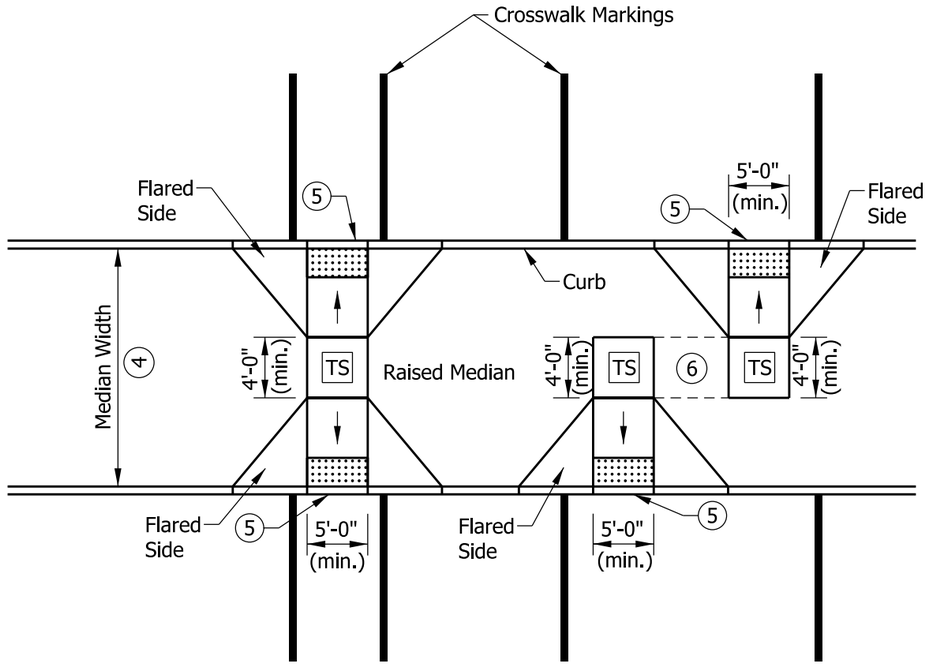

MEDIAN PERPENDICULAR CURB RAMPS

LEGEND:

- Ramp
- Detectable Warning Surface
- TS — Turning Space

INDIANA DEPARTMENT OF TRANSPORTATION

MEDIAN CUT-THROUGH AND
MEDIAN PERPENDICULAR CURB RAMP
TYPICAL PLACEMENT
SEPTEMBER 2023

STANDARD DRAWING NO. E 604-SWCR-11

SUBHI BAZLAMIT
REGISTERED
No.
12000143
STATE OF
INDIANA
PROFESSIONAL ENGINEER

Subhi Bazlamit 04/28/2023
DESIGN STANDARDS ENGINEER DATE

05/12/2023
CHIEF ENGINEER DATE

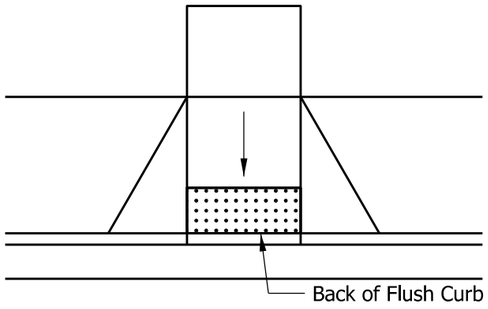

PERPENDICULAR CURB RAMP

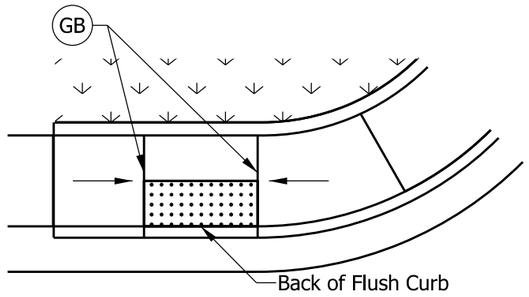

PARALLEL CURB RAMP (4)

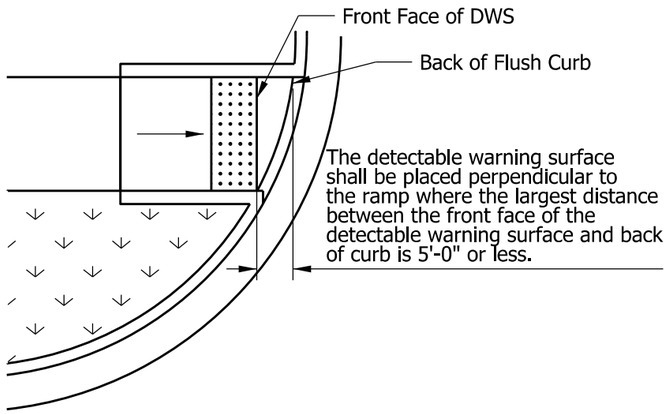

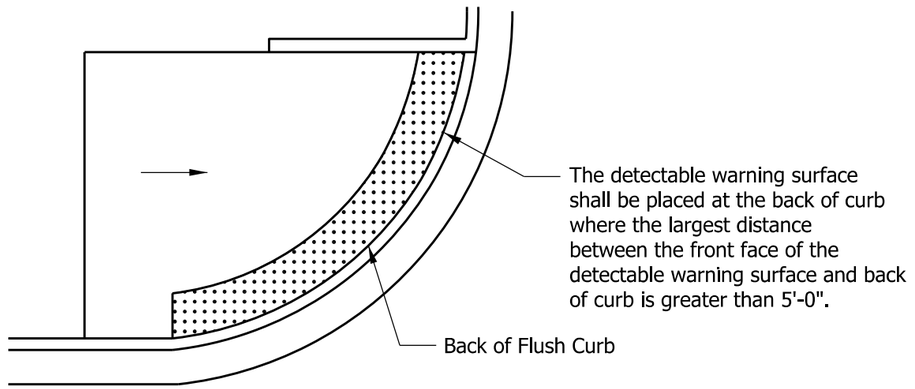

ONE-WAY DIRECTIONAL PERPENDICULAR CURB RAMPS ON A RADIUS (3)

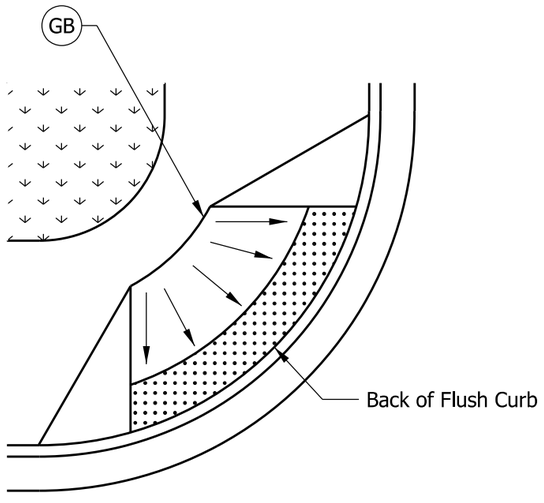

BLENDED TRANSITION CURB RAMP (5)

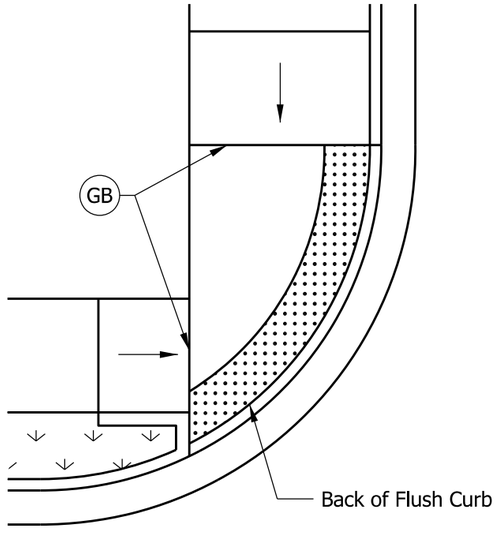

DEPRESSED CORNER CURB RAMP (5) (7)

NOTES:

1. A detectable warning surface shall be placed at each street, highway, or railroad crossing. See Standard Drawing E 604-SDWK-03 for a detectable warning surface placement at a sidewalk driveway crossing.
2. The detectable warning surface shall extend a minimum of 2 ft in the direction of pedestrian travel and extend the full width as shown. The detectable warning surface shall not be placed across a grade break.

(3) Where the distance from the face of the detectable warning surface is 5 ft or less from the back of curb, the detectable warning surface shall be placed perpendicular to the ramp. Where the distance from the face of the detectable warning surface is more than 5 ft from the back of curb, the detectable warning surface shall be placed at the back of curb as shown or in an alternate placement configuration. See Standard Drawing E 604-SWCR-13 for alternate detectable warning surface placement.

(4) The detectable warning surface on a parallel curb ramp shall be placed on the turning space at the flush transition between the street and turning space at the back of curb.

(5) The detectable warning surface on a blended transition or depressed corner shall be placed at the back of curb as shown or in an alternate placement configuration. See Standard Drawing E 604-SWCR-13 for alternate detectable warning surface placement.

6. See Standard Drawing E 604-SWCR-14 for detectable warning surface details.

LEGEND:

- Buffer or Other Non-Walkable Surface
- Detectable Warning Surface (DWS)
- Ramp
- GB Grade Break

INDIANA DEPARTMENT OF TRANSPORTATION

DETECTABLE WARNING SURFACE PLACEMENT AND CONFIGURATION

SEPTEMBER 2018

STANDARD DRAWING NO. E 604-SWCR-12

ELIZABETH W. PHILLIPS REGISTERED No. 10200124 STATE OF INDIANA PROFESSIONAL ENGINEER

/s/ Elizabeth W. Phillips 03/29/18
DESIGN STANDARDS ENGINEER DATE

/s/ John Leckie 04/25/18
CHIEF ENGINEER DATE

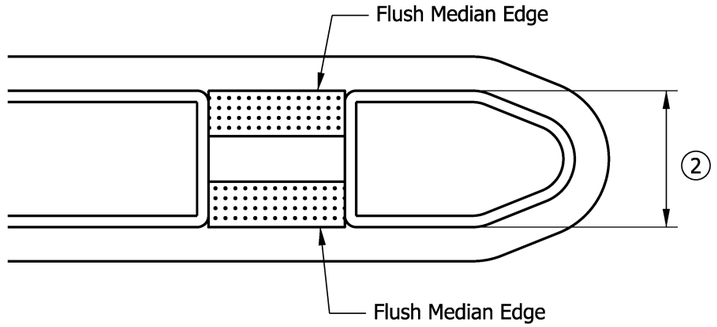

MEDIAN CUT-THROUGH

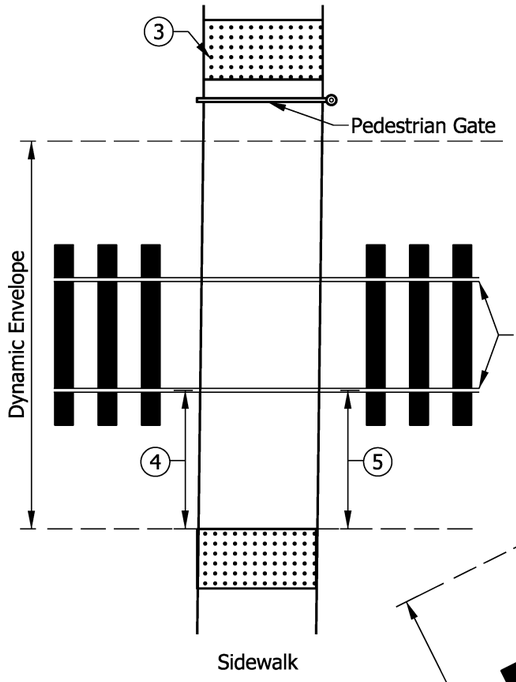

PERPENDICULAR RAILROAD CROSSING

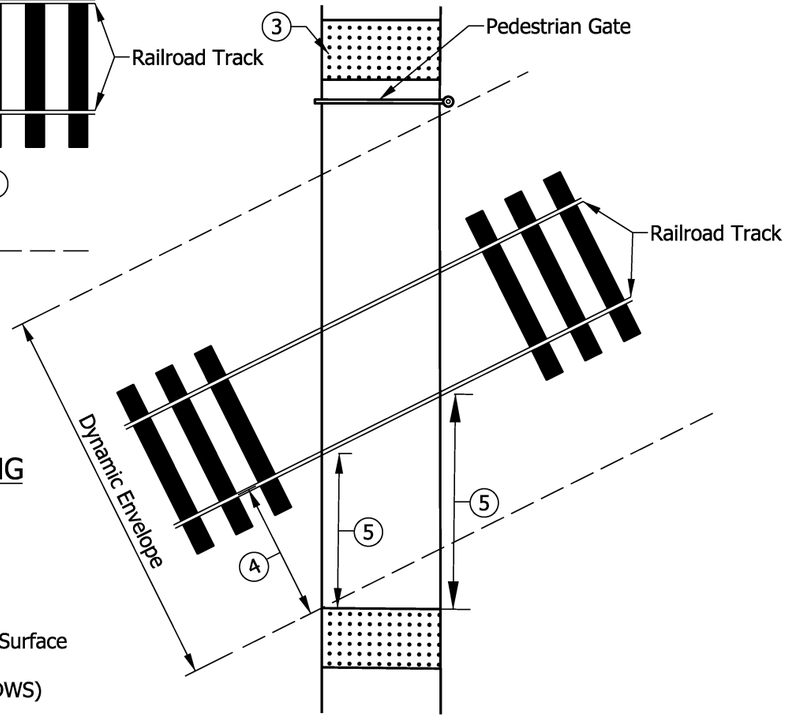

SKEWED RAILROAD CROSSING

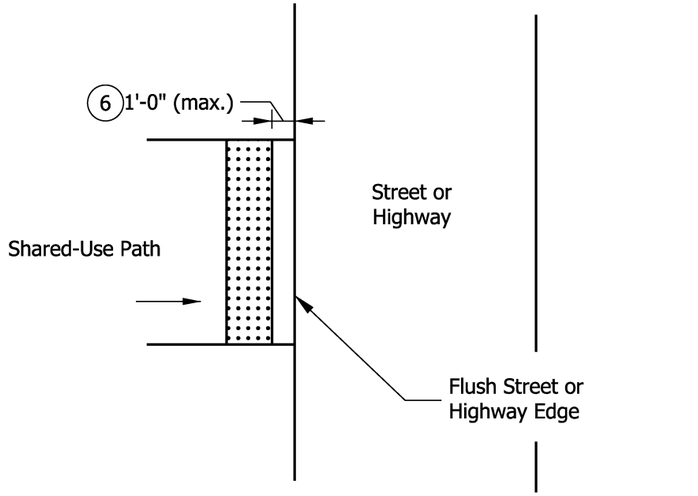

SHARED-USE PATH

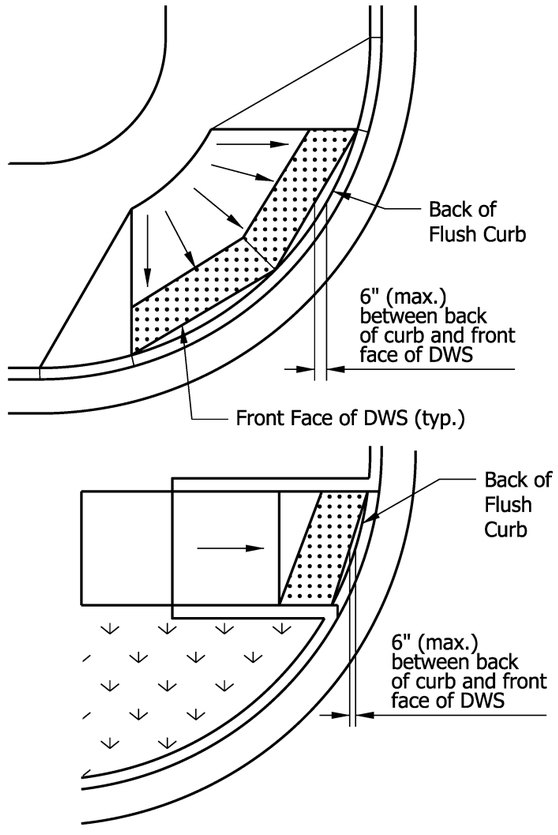

ALTERNATE DETECTABLE WARNING SURFACE PLACEMENT (7)

LEGEND:

- Buffer or Other Non-Walkable Surface
- Detectable Warning Surface (DWS)
- Ramp
- GB Grade Break

NOTES:

1. The detectable warning surface shall extend a minimum length of 2 ft in the direction of pedestrian travel and extend the full width as shown. The detectable warning surface shall not be placed across a grade break. The edges of adjacent panels shall be parallel and tightly abutted.
2. The detectable warning surface on a median cut-through shall be placed at the flush transition between the street and median cut-through. Where a median is less than 6 ft, a detectable warning surface shall not be placed.
3. Where a pedestrian gate is provided at a railroad crossing, the detectable warning surface shall be placed on the side of the gate opposite the railroad crossing.
4. The detectable warning surface shall be outside of the railroad dynamic envelope, 6 ft min. from the centerline of the nearest rail.
5. The edge of the detectable warning surface shall not be within the dynamic envelope and no greater than 15 ft from the centerline of the nearest rail.
6. Where shared-use path intersects a street or highway, the detectable warning surface shall be placed on the shared-use path within 1 ft of the street or highway edge.
7. DWS panel ends shall be placed at the back of curb. The distance between the back of curb and the front face of the detectable warning surface shall not exceed 6 in. between the ends.
8. See Standard Drawing E 604-SWCR-14 for detectable warning surface details.

INDIANA DEPARTMENT OF TRANSPORTATION

DETECTABLE WARNING SURFACE PLACEMENT AND CONFIGURATION

SEPTEMBER 2023

STANDARD DRAWING NO. E 604-SWCR-13

SUBHI BAZLAMIT REGISTERED No. 12000143 STATE OF INDIANA PROFESSIONAL ENGINEER

Subhi Bazlamit 04/28/2023
DESIGN STANDARDS ENGINEER DATE

05/08/2023
CHIEF ENGINEER DATE

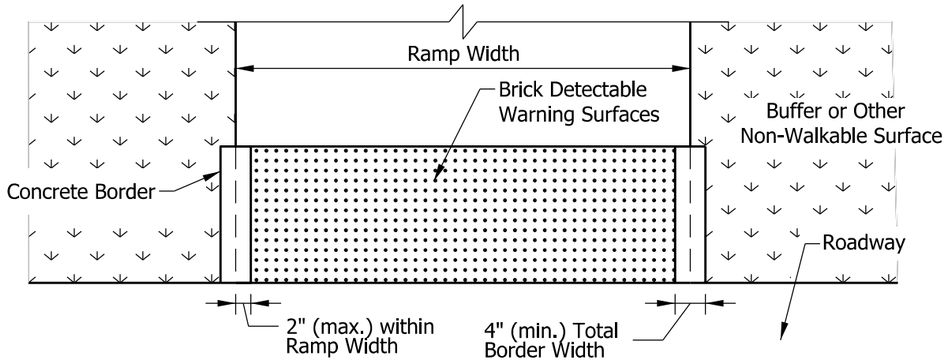

BRICK DETECTABLE WARNING SURFACE WITH CONCRETE BORDER ⑥ ⑦

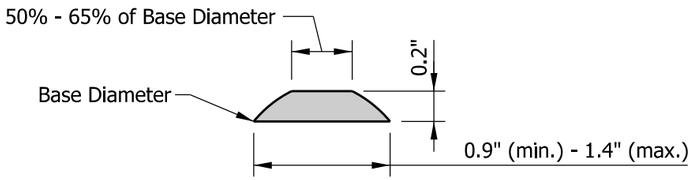

SECTION A-A

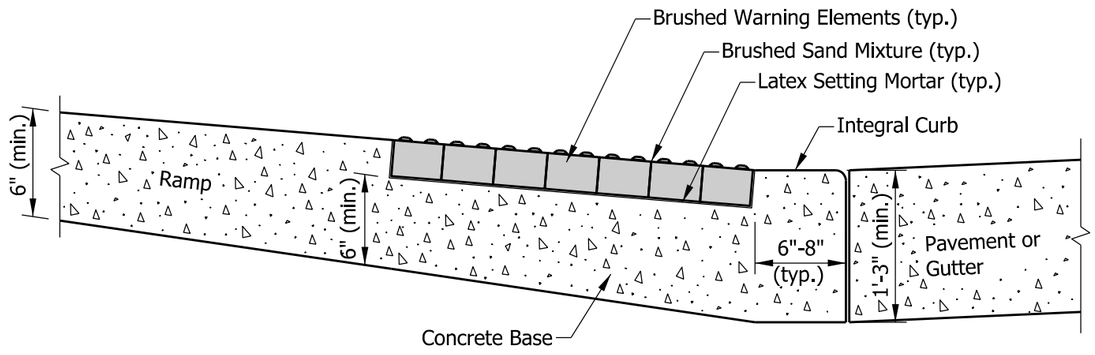

TYPICAL RAMP AND BRICK SURFACE CONSTRUCTION DETAIL

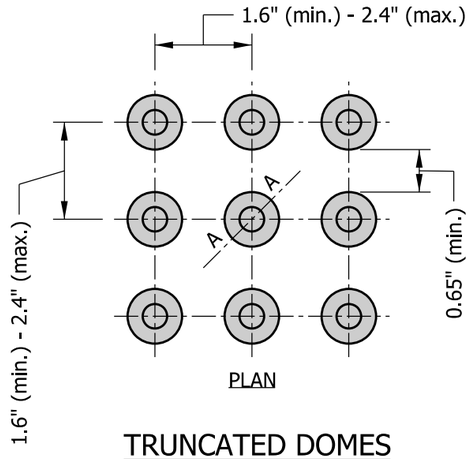

TRUNCATED DOMES

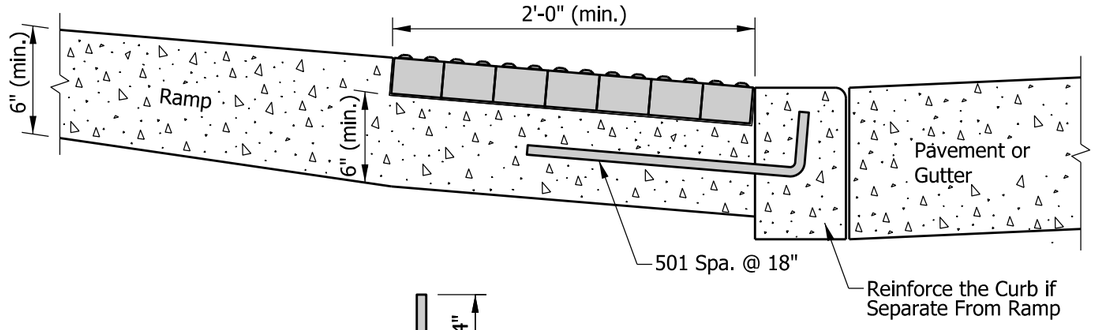

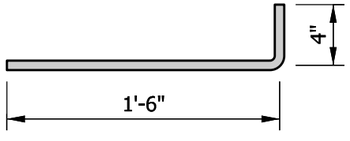

501 x 1'-10"

ALTERNATE CURB CONSTRUCTION

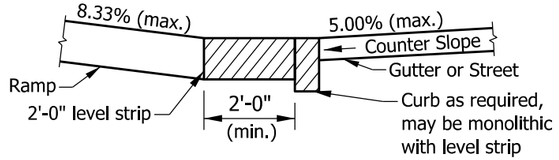

CHANGE OF GRADE > 11% ⑤

NOTES:

1. Detectable warning surface shall consist of truncated domes. Domes shall be aligned in a square or radial grid pattern with diameter and center-to-center spacing within the ranges specified.
2. The detectable warning surface may be field cut. Truncated dome spacing between adjacent panels shall be within the ranges specified.
3. The detectable warning surface shall contrast visually with adjacent surfaces, either light-on-dark or dark-on-light.
4. The detectable warning surface shall extend a minimum of 2 ft in the direction of pedestrian travel and extend the full width as shown. The detectable warning surface shall not be placed across a grade break.
5. The maximum counter slope of the gutter or street at the bottom of the ramp shall be 5.00%. Where the algebraic difference between the running slope and the counter slope exceeds 11%, a 2-ft minimum level strip should be provided at the bottom of the ramp.
6. Where a concrete border is used for forming, the border shall be cast monolithically with the curb ramp concrete. The concrete border shall not reduce the ramp width by more than 2 in. on each side.
7. Where forming other than a concrete border is used, the edge restraint shall not encroach upon the ramp width.

INDIANA DEPARTMENT OF TRANSPORTATION

DETECTABLE WARNING SURFACE DETAILS

SEPTEMBER 2018

STANDARD DRAWING NO. E 604-SWCR-14

ELIZABETH W. PHILLIPS REGISTERED No. 10200124 STATE OF INDIANA PROFESSIONAL ENGINEER

/s/ Elizabeth W. Phillips 03/29/18
DESIGN STANDARDS ENGINEER DATE

/s/ John Leckie 04/25/18
CHIEF ENGINEER DATE

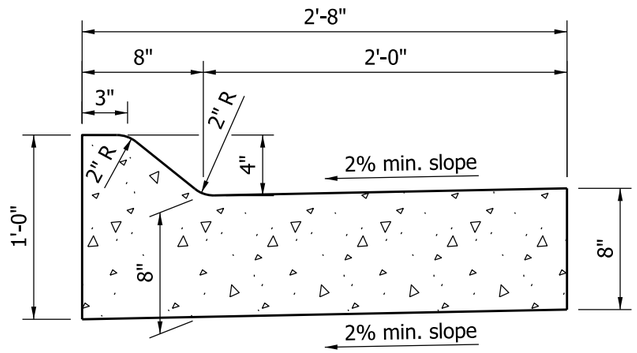

COMBINED CONCRETE CURB
AND GUTTER, TYPE B
(SLOPING)

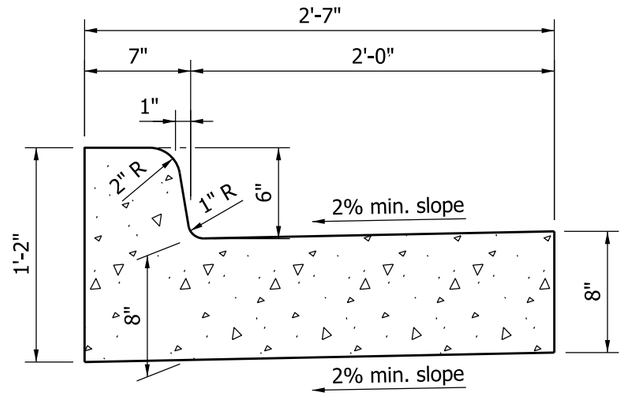

COMBINED CONCRETE CURB
AND GUTTER
(VERTICAL)

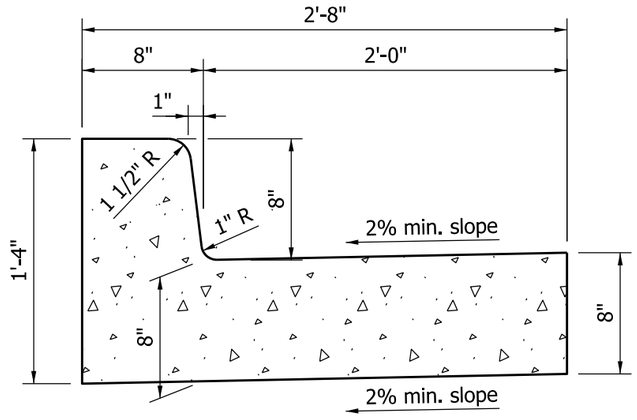

COMBINED CONCRETE CURB
AND GUTTER, TYPE C
(VERTICAL)

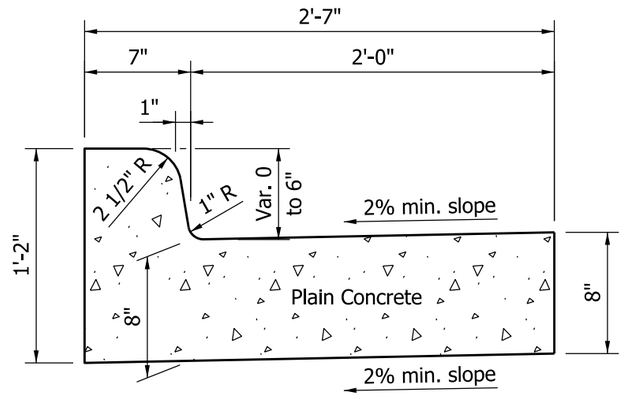

MONOLITHIC CURB
(VERTICAL)

INDIANA DEPARTMENT OF TRANSPORTATION

COMBINED CONCRETE CURB
AND GUTTER

SEPTEMBER 2011

STANDARD DRAWING NO. E 605-CCCG-01

RICHARD L. VanCLEAVE
REGISTERED
No. 9750
STATE OF INDIANA
PROFESSIONAL ENGINEER

DESIGN STANDARDS ENGINEER

/s/ Richard L. VanCleave 09/01/11
DESIGN STANDARDS ENGINEER DATE

/s/ Mark A. Miller 09/01/11
CHIEF HIGHWAY ENGINEER DATE

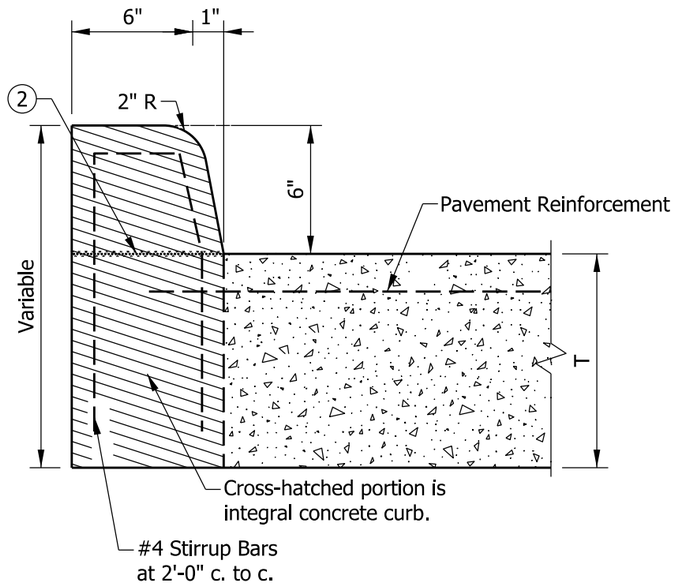

INTEGRAL CONCRETE CURB
(VERTICAL)

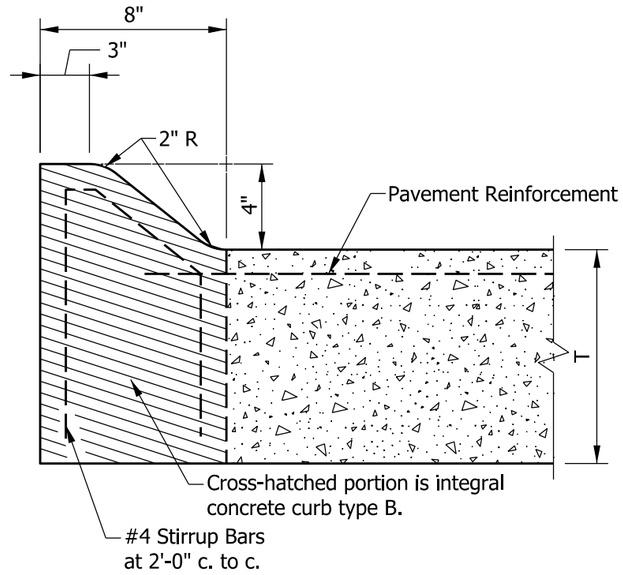

INTEGRAL CONCRETE CURB
TYPE B
(SLOPING)

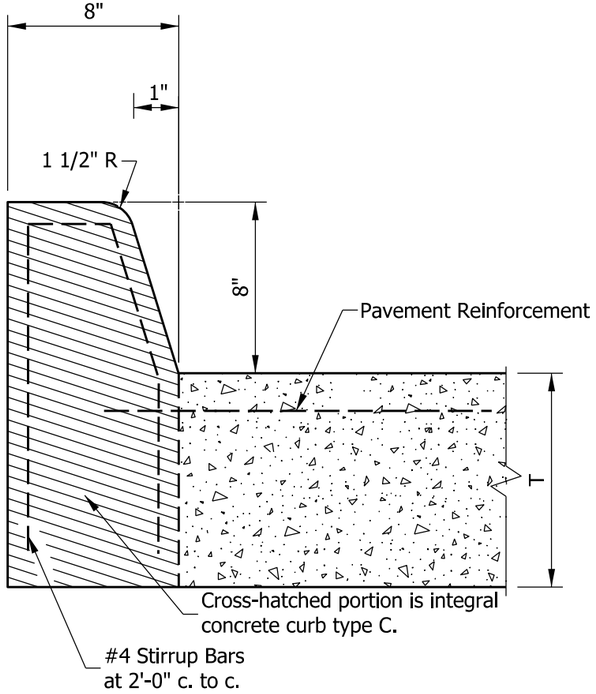

INTEGRAL CONCRETE CURB
TYPE C
(VERTICAL)

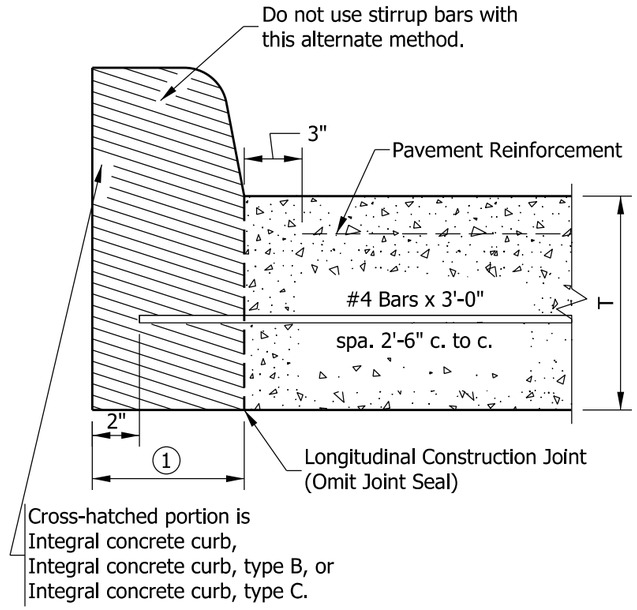

ALTERNATE METHOD
OF CONSTRUCTION FOR ALL TYPES
OF INTEGRAL CONCRETE CURB

NOTES:

1. 8 in. for integral concrete curb type B or C and 7 in. for integral concrete curb.
2. Concrete below this line may be poured with the pavement.

LEGEND:

T = Nominal Pavement Thickness

INDIANA DEPARTMENT OF TRANSPORTATION

INTEGRAL CONCRETE CURB

SEPTEMBER 2004

STANDARD DRAWING NO. E 605-CCIN-01

RICHARD L. VanCLEAVE
REGISTERED
No. 9750
STATE OF INDIANA
PROFESSIONAL ENGINEER

/s/ Richard L. VanCleave 9-01-04
DESIGN STANDARDS ENGINEER DATE

/s/ Richard K. Smutzer 9-01-04
CHIEF ENGINEER DATE

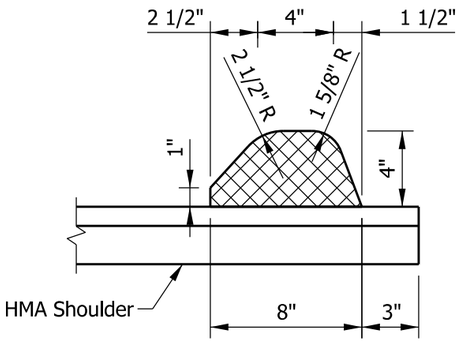

HMA CURB
(SLOPING)

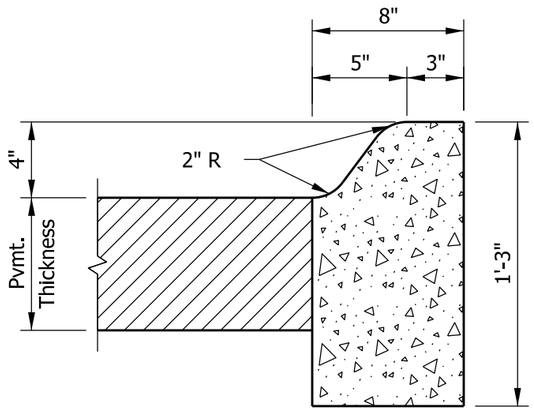

CONCRETE CURB
TYPE B
(SLOPING)

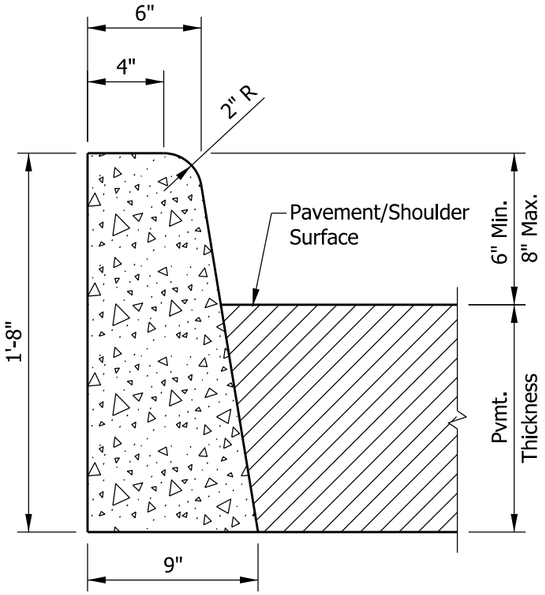

CONCRETE CURB
(VERTICAL)

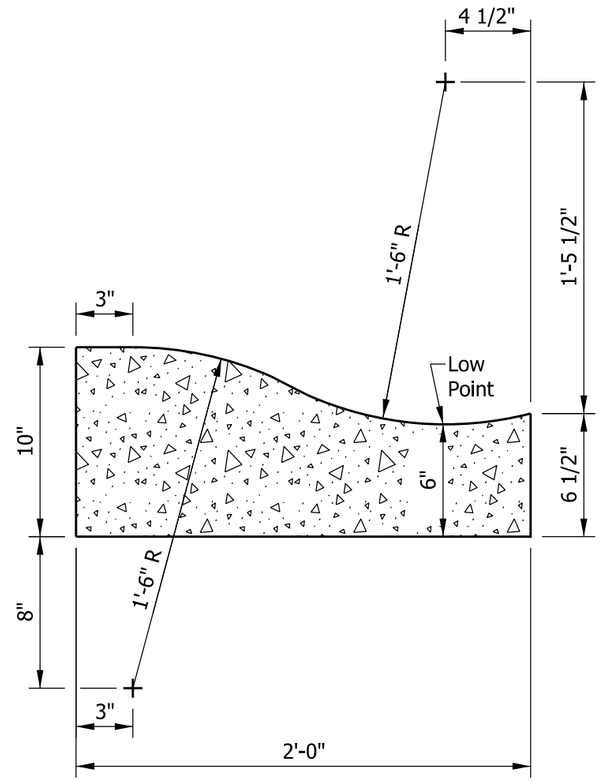

ROLLED CURB
(SLOPING)

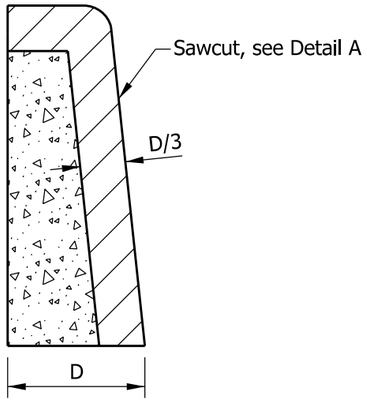

CURB SECTION
AT JOINT

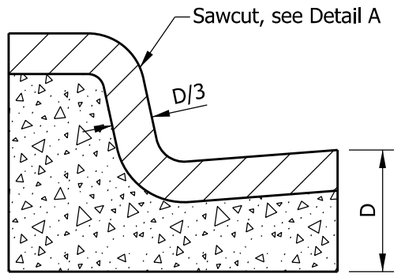

COMBINED CURB AND GUTTER
SECTION AT JOINT

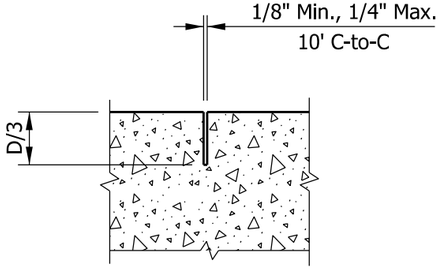

DETAIL A

SAWED CONTRACTION JOINTS FOR CURB AND COMBINED CURB & GUTTER

INDIANA DEPARTMENT OF TRANSPORTATION

CONCRETE AND HMA
CURBS AND SAWED JOINTS

SEPTEMBER 2014

STANDARD DRAWING NO. E-605-CCSJ-01

RICHARD L. VanCLEAVE
REGISTERED
No. 9750
STATE OF INDIANA
PROFESSIONAL ENGINEER

/s/ Richard L. VanCleave *06/20/13*
DESIGN STANDARDS ENGINEER DATE

/s/ Mark A. Miller *09/26/13*
CHIEF ENGINEER DATE

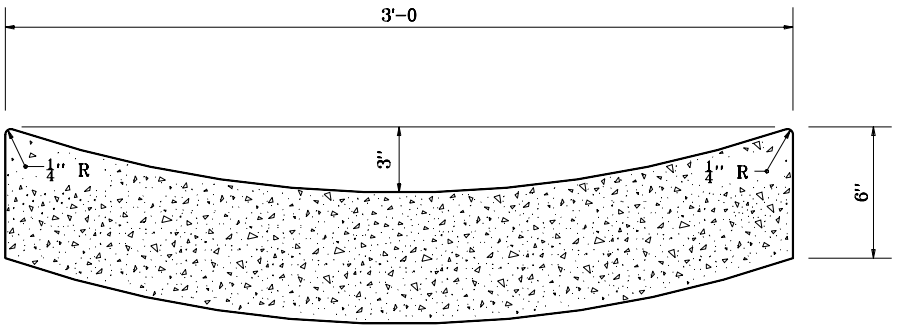

CONCRETE GUTTER

NOTES:

(1) For integral concrete curb

(2) For integral concrete curb Type C

(3) For integral concrete curb Type B

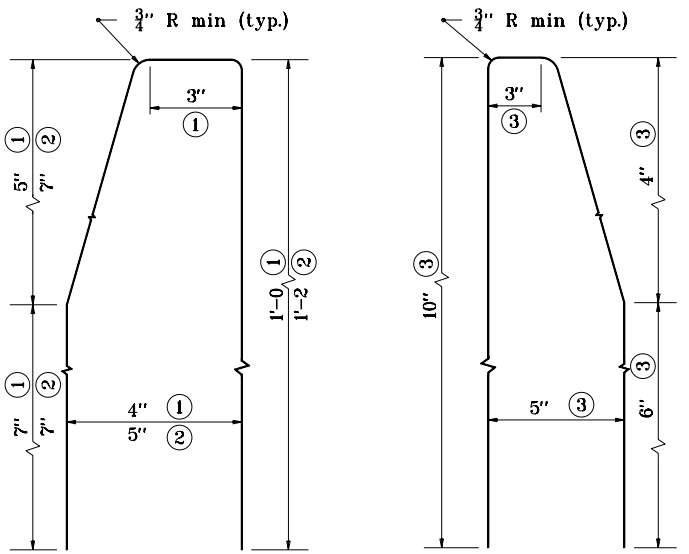

BENDING DIAGRAM FOR STIRRUPS

INDIANA DEPARTMENT OF TRANSPORTATION

CONCRETE GUTTER AND CURB STIRRUP BENDING DIAGRAM

APRIL 1995

STANDARD DRAWING NO. **E 605-CGCS-01**

ANTHONY L. UREMOVICH REGISTERED No. 18095 STATE OF INDIANA PROFESSIONAL ENGINEER

DESIGN STANDARDS ENGINEER

DETAILS PLACED IN THIS FORMAT	11-15-99
/s/ Anthony L. Uremovich DESIGN STANDARDS ENGINEER	11-15-99 DATE
/s/ Firooz Zandi CHIEF HIGHWAY ENGINEER	11-15-99 DATE
ORIGINALLY APPROVED	4-03-95

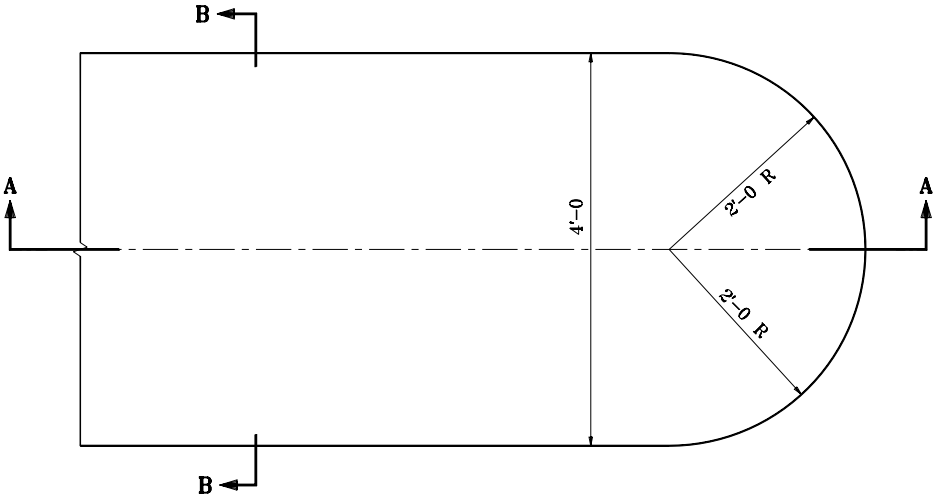

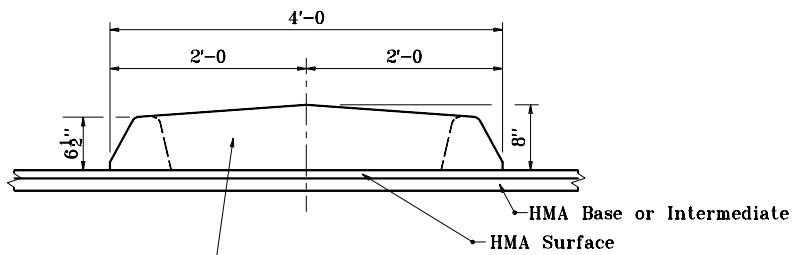

SECTION B–B

This section my be constructed as a monolithic unit or built up with an asphalt filler between two asphalt curbs.

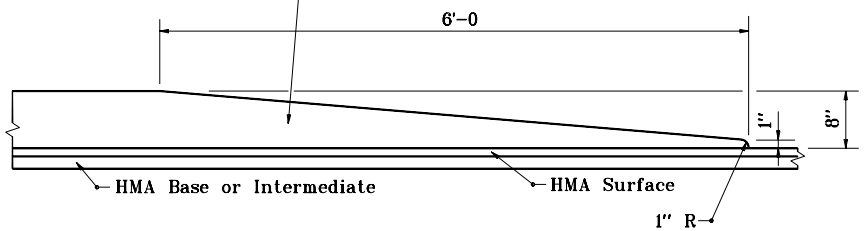

SECTION A–A

INDIANA DEPARTMENT OF TRANSPORTATION

HMA CENTER CURB TYPE A

JANUARY 2000

STANDARD DRAWING NO. **E 605–CNCB–01**

ANTHONY L. UREMOVICH REGISTERED No. 18095 STATE OF INDIANA PROFESSIONAL ENGINEER

DESIGN STANDARDS ENGINEER

/s/ Anthony L. Uremovich — DESIGN STANDARDS ENGINEER — 1–03–00 DATE

/s/ Firooz Zandi — CHIEF HIGHWAY ENGINEER — 1–03–00 DATE

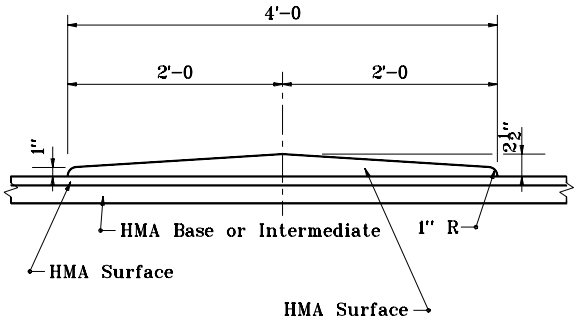

SECTION B–B

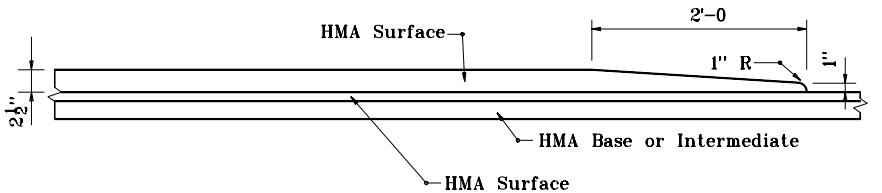

SECTION A–A

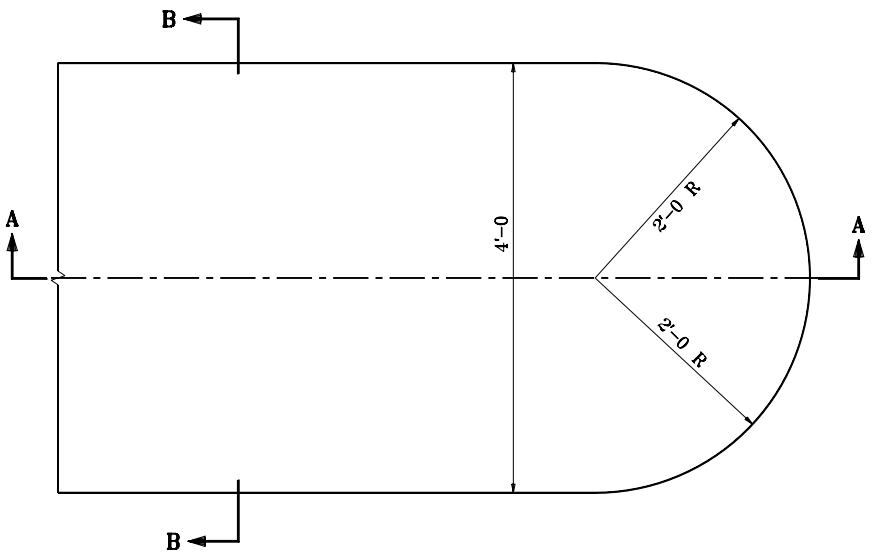

INDIANA DEPARTMENT OF TRANSPORTATION

HMA CENTER CURB TYPE B

JANUARY 2000

STANDARD DRAWING NO. E 605-CNCB-02

ANTHONY L. UREMOVICH REGISTERED No. 18095 STATE OF INDIANA PROFESSIONAL ENGINEER

DESIGN STANDARDS ENGINEER

/s/ Anthony L. Uremovich 1-03-00
DESIGN STANDARDS ENGINEER — DATE

/s/ Firooz Zandi 1-03-00
CHIEF HIGHWAY ENGINEER — DATE

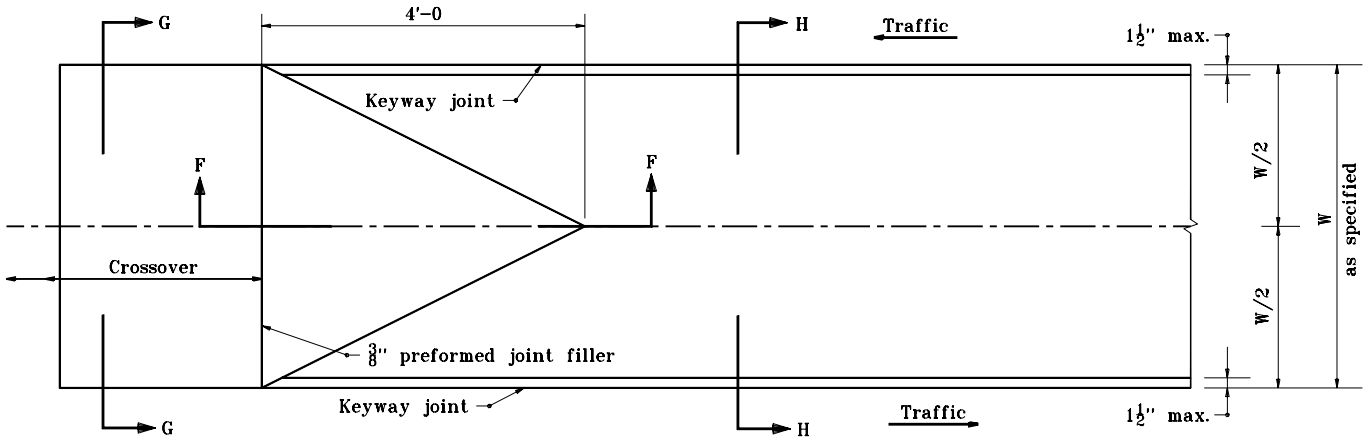

GENERAL NOTES

(1) For W greater than 4'-0 vary slope to hold 2" maximum height.

LEGEND

T = Normal pavement depth

W = Center curb width

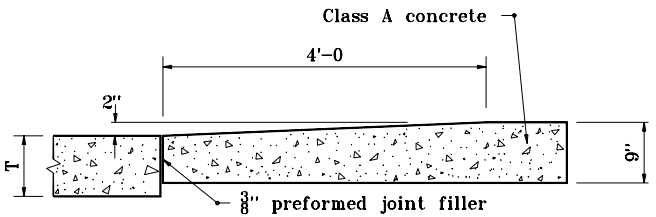

SECTION F-F

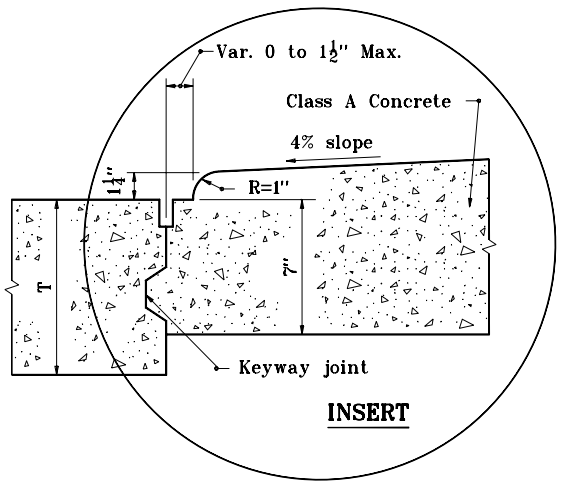

INSERT

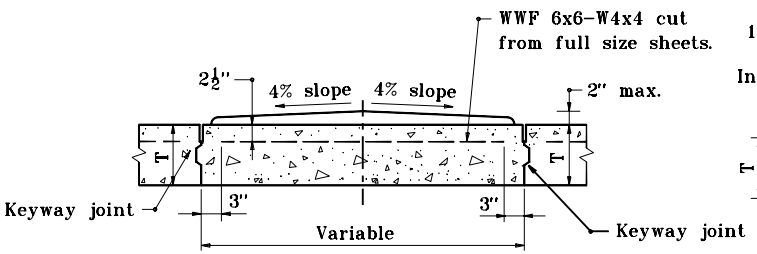

SECTION G-G

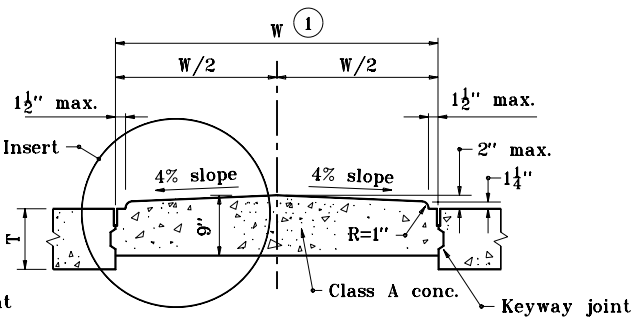

SECTION H-H

INDIANA DEPARTMENT OF TRANSPORTATION

CONCRETE CENTER CURB TYPE A

JANUARY 2001

STANDARD DRAWING NO. E 605-CNCC-01

ANTHONY L. UREMOVICH REGISTERED No. 18095 STATE OF INDIANA PROFESSIONAL ENGINEER

DESIGN STANDARDS ENGINEER

/s/ Anthony L. Uremovich 1-02-01
DESIGN STANDARDS ENGINEER — DATE

/s/ Firooz Zandi 1-02-01
CHIEF HIGHWAY ENGINEER — DATE

NOTES :

1. Curb radii and batter to conform to Type B curb, as shown on Standard Drawing E 605-CCSJ-01.

LEGEND

T = Normal pavement depth

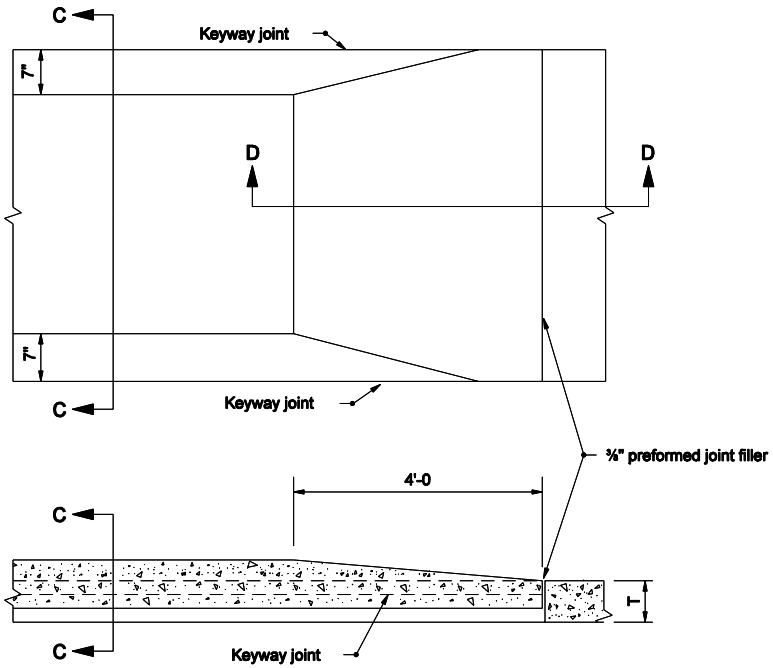

SECTION D-D

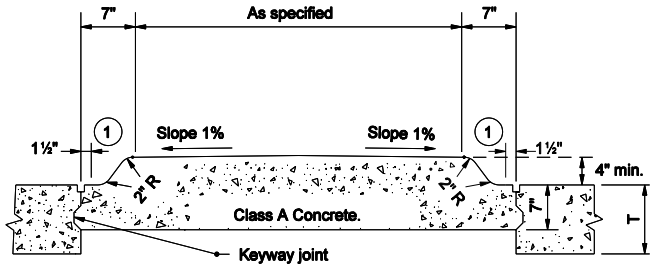

SECTION C-C

INDIANA DEPARTMENT OF TRANSPORTATION

CONCRETE CENTER CURB TYPE B

MARCH 2004

STANDARD DRAWING NO. E 605-CNCC-02

RICHARD L. VanCLEAVE REGISTERED No. 9750 STATE OF INDIANA PROFESSIONAL ENGINEER

DESIGN STANDARDS ENGINEER

/s/ Richard L. VanCleave 3/01/04
DESIGN STANDARDS ENGINEER DATE

/s/ Richard K. Smutzer 3/01/04
CHIEF HIGHWAY ENGINEER DATE

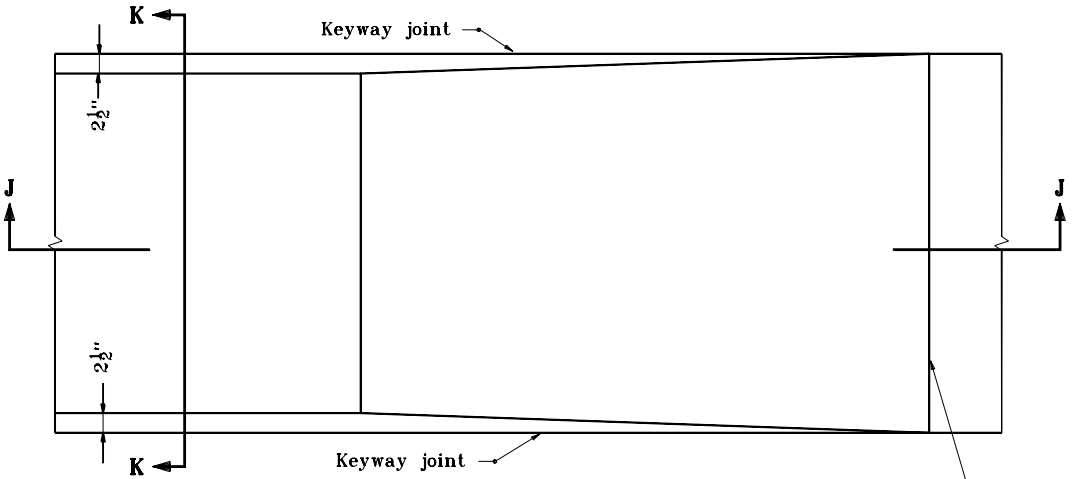

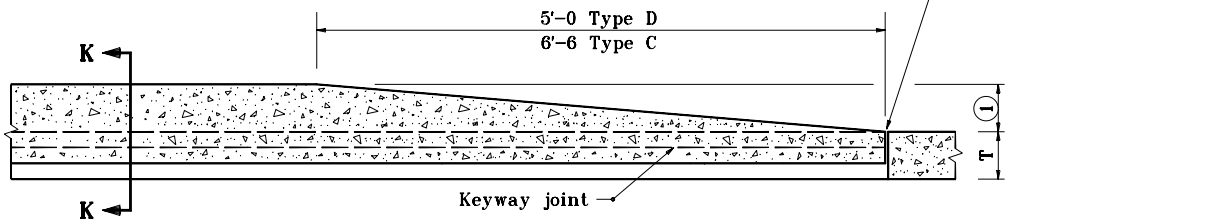

SECTION J-J

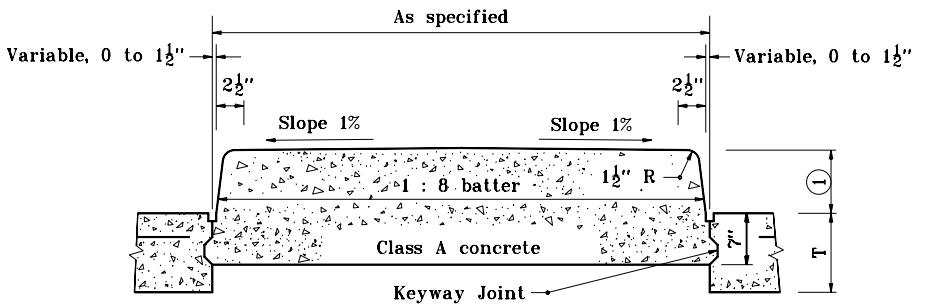

SECTION K-K

NOTES :

(1) 6" for concrete center curb, type D and 8" for concrete center curb, type C.

LEGEND

T = Normal pavement depth

INDIANA DEPARTMENT OF TRANSPORTATION

CONCRETE CENTER CURBS TYPE C & D

APRIL 1995

STANDARD DRAWING NO. **E 605-CNCC-03**

ANTHONY L. UREMOVICH REGISTERED No. 18095 STATE OF INDIANA PROFESSIONAL ENGINEER

DESIGN STANDARDS ENGINEER

DETAILS PLACED IN THIS FORMAT	11-15-99
/s/ Anthony L. Uremovich, DESIGN STANDARDS ENGINEER	11-15-99
/s/ Firooz Zandi, CHIEF HIGHWAY ENGINEER	11-15-99
ORIGINALLY APPROVED	4-03-95

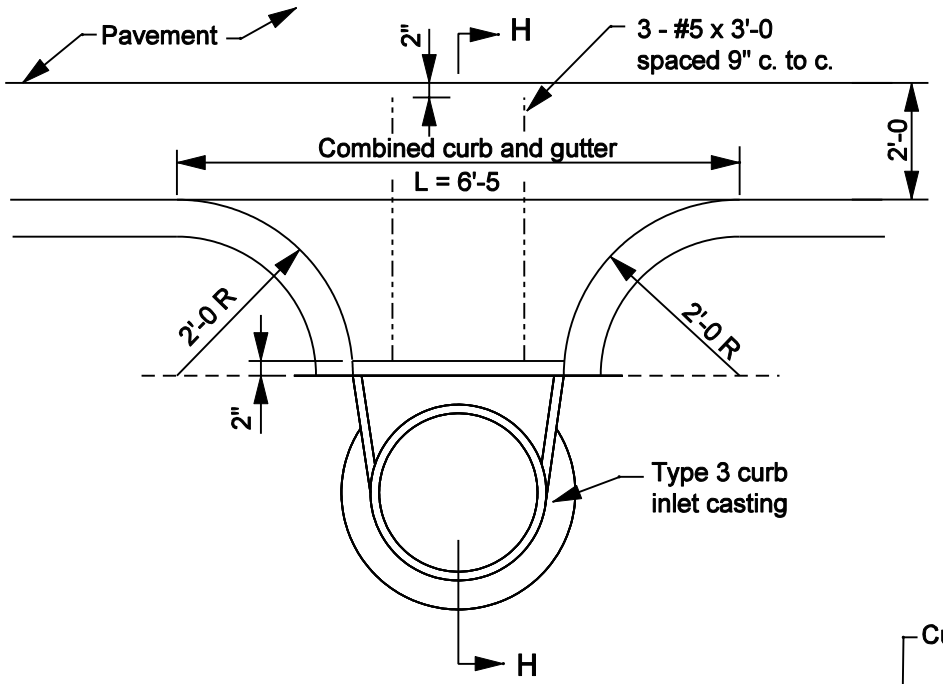

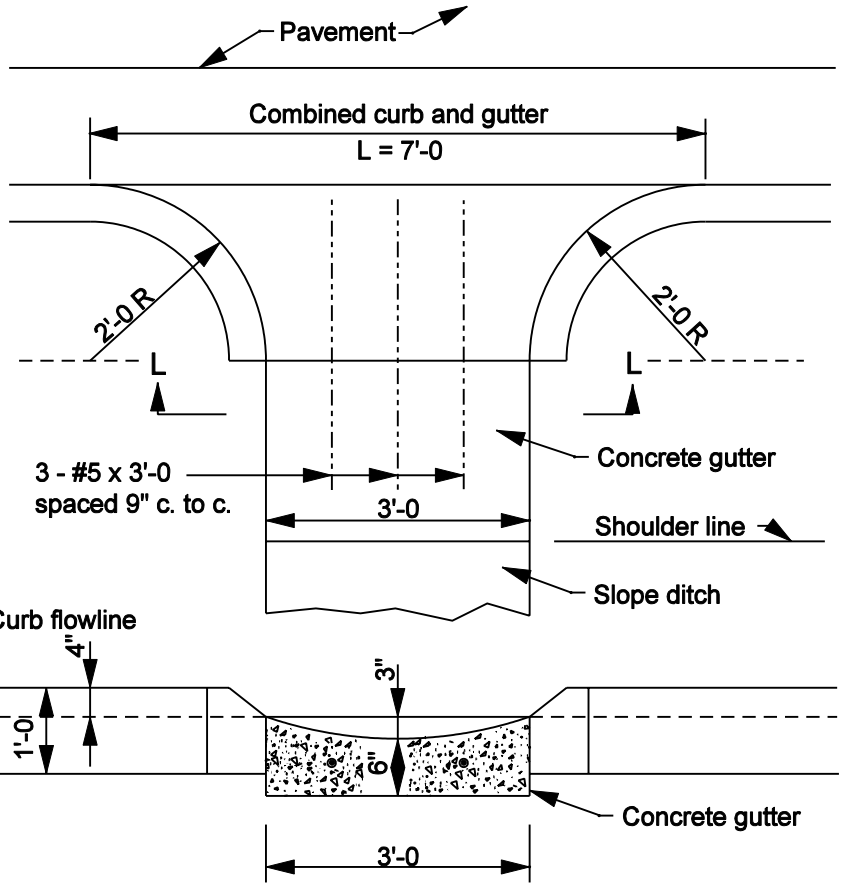

SECTION L-L

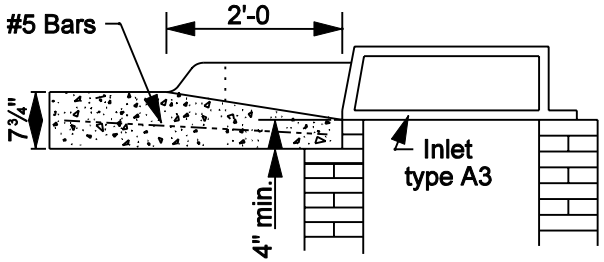

SECTION H-H

INDIANA DEPARTMENT OF TRANSPORTATION

COMBINED CURB AND GUTTER TURNOUTS

MARCH 2003

STANDARD DRAWING NO. E 605-CTCG-01

RICHARD L. VanCLEAVE REGISTERED No. 9750 STATE OF INDIANA PROFESSIONAL ENGINEER

DESIGN STANDARDS ENGINEER

/s/ Richard L. VanCleave 3-03-03
DESIGN STANDARDS ENGINEER DATE

/s/ Richard K. Smutzer 3-03-03
CHIEF HIGHWAY ENGINEER DATE

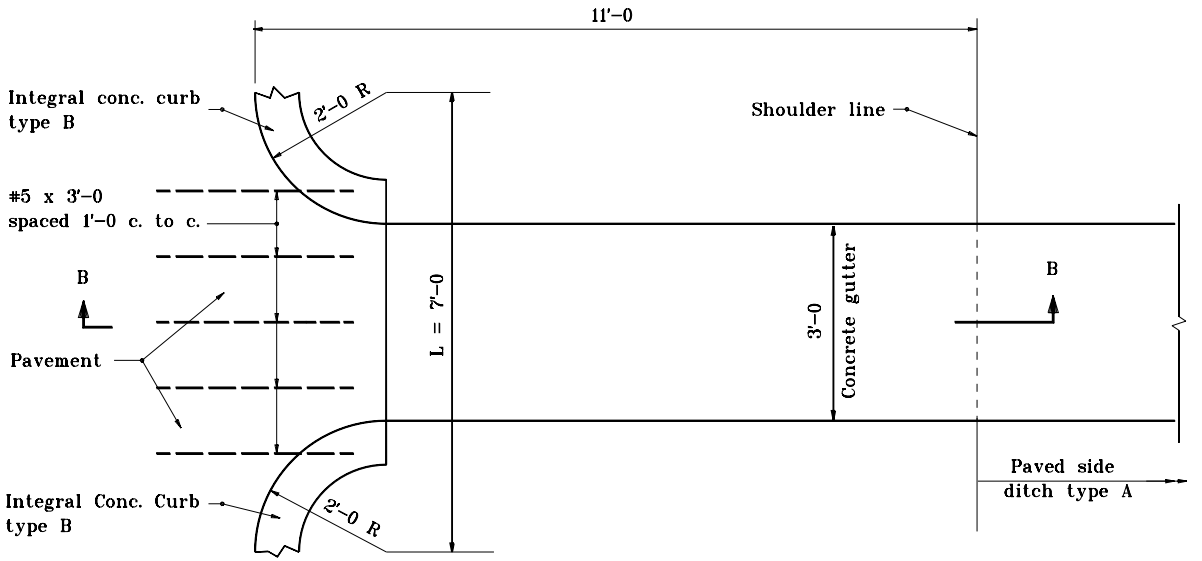

NOTES :

1. See Standard Drawing E 607-PSDT-01 for paved side ditch details.
2. See Standard Drawing E 501-CCPJ-08 for keyway joint details.

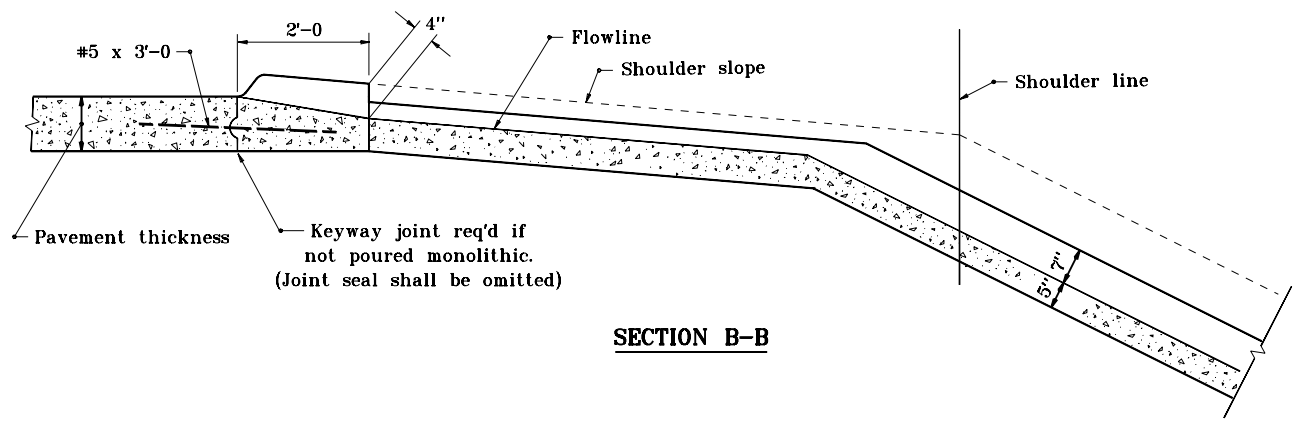

SECTION B-B

INDIANA DEPARTMENT OF TRANSPORTATION

CURB TURNOUT TO CONCRETE GUTTER & PAVED SIDE DITCH

SEPTEMBER 1997

STANDARD DRAWING NO. **E 605-CTCG-02**

ANTHONY L. UREMOVICH REGISTERED No. 18095 STATE OF INDIANA PROFESSIONAL ENGINEER

DESIGN STANDARDS ENGINEER

DETAILS PLACED IN THIS FORMAT	11-15-99
/s/ Anthony L. Uremovich DESIGN STANDARDS ENGINEER	11-15-99 DATE
/s/ Firooz Zandi CHIEF HIGHWAY ENGINEER	11-15-99 DATE
ORIGINALLY APPROVED	9-01-97

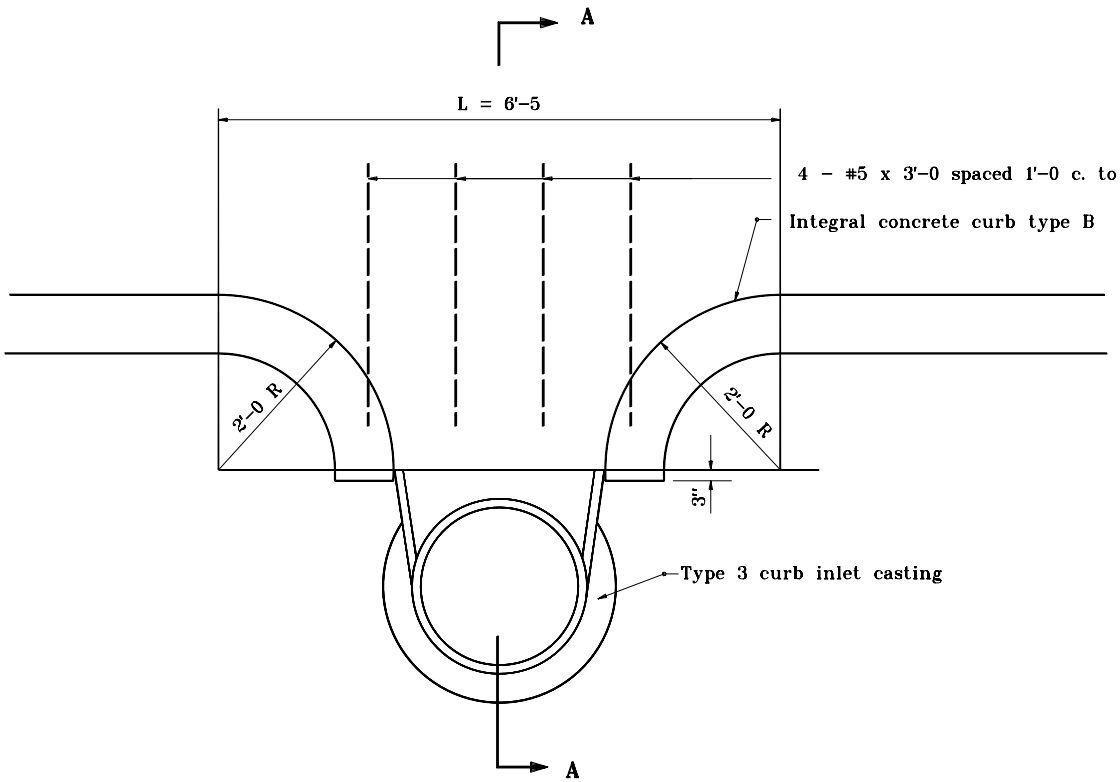

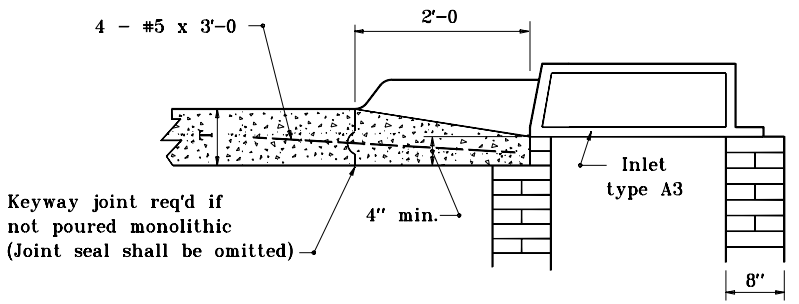

SECTION A-A

NOTES :

1. See Standard Drawing E 501-CCPJ-08 for keyway joint details.

INDIANA DEPARTMENT OF TRANSPORTATION

CURB TURNOUT TO A3 INLET

SEPTEMBER 1997

STANDARD DRAWING NO. **E 605-CTIN-01**

ANTHONY L. UREMOVICH REGISTERED No. 18095 STATE OF INDIANA PROFESSIONAL ENGINEER

DESIGN STANDARDS ENGINEER

DETAILS PLACED IN THIS FORMAT	11-15-99
/s/ Anthony L. Uremovich DESIGN STANDARDS ENGINEER	11-15-99 DATE
/s/ Firooz Zandi CHIEF HIGHWAY ENGINEER	11-15-99 DATE
ORIGINALLY APPROVED	9-01-97

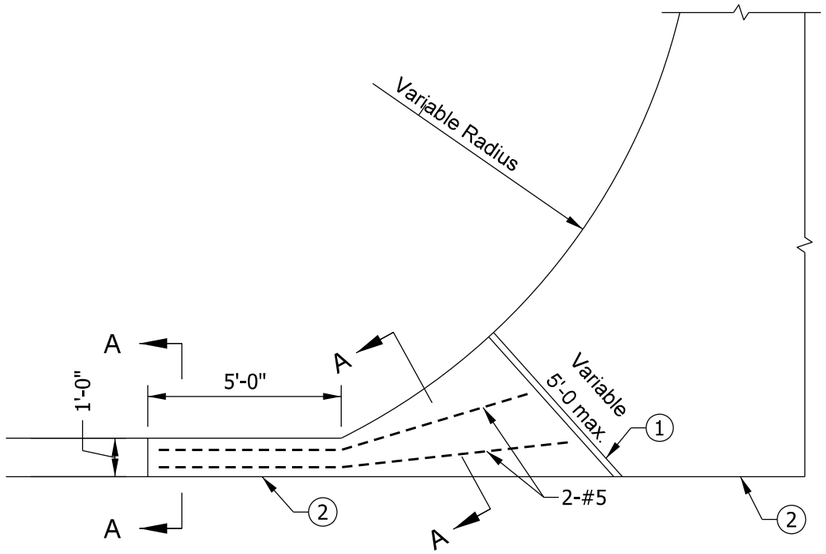

EAR CONSTRUCTION TYPE "A"

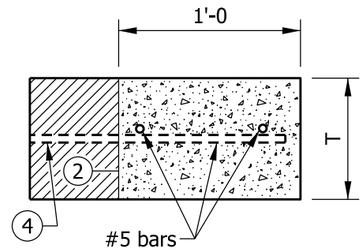

SECTION A-A

NOTES:

1. 1" performed joint filler (perpendicular to radius)
2. Longitudinal construction joint, see Standard Drawing series E 503-CCPJ.
3. Integral concrete curb
4. Where pavement is in place use retrofit construction tie bar.

T = Thickness of pavement

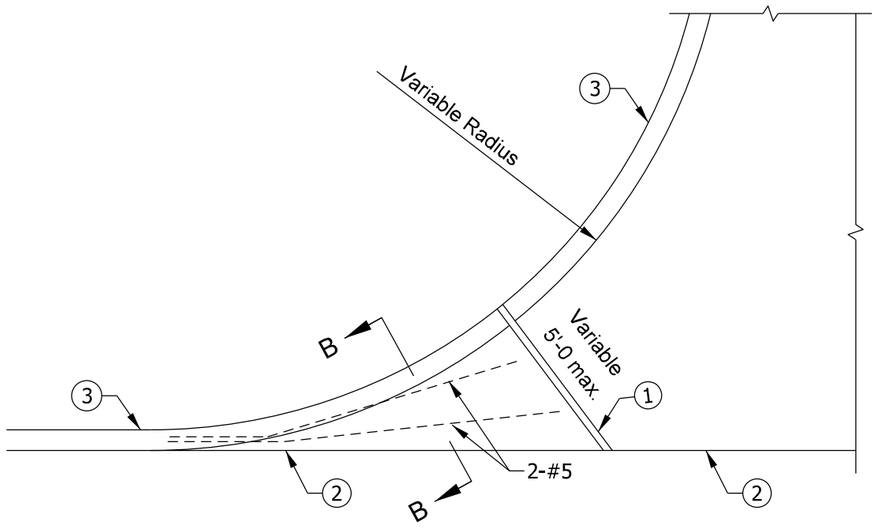

EAR CONSTRUCTION TYPE "B"

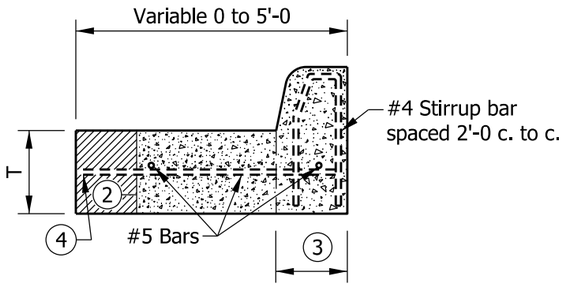

SECTION B-B

INDIANA DEPARTMENT OF TRANSPORTATION

EAR CONSTRUCTION
TYPE A & B

SEPTEMBER 2019

STANDARD DRAWING NO. E 605-ERCN-01

ELIZABETH W. PHILLIPS
REGISTERED
No. 10200124
STATE OF INDIANA
PROFESSIONAL ENGINEER

5/2/2019
DESIGN STANDARDS ENGINEER DATE

5/31/2019
CHIEF ENGINEER DATE

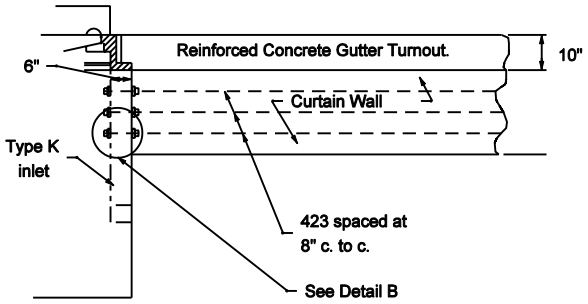

DETAIL A

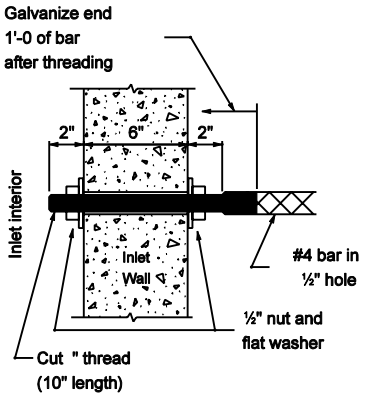

DETAIL B

GENERAL NOTES

1. For location of details and sections see Standard Drawing E 605-GTRC-03.

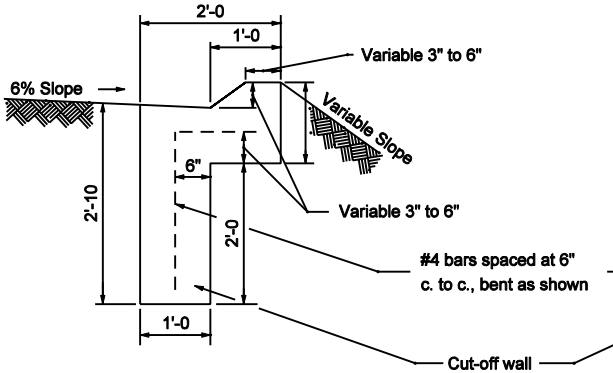

SECTION A-A

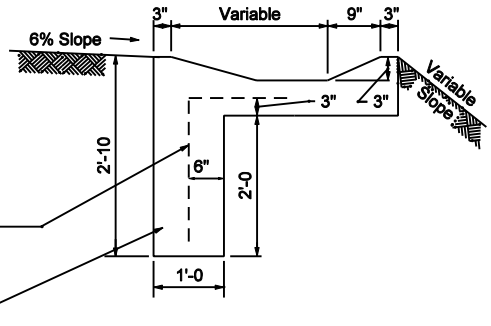

SECTION B-B

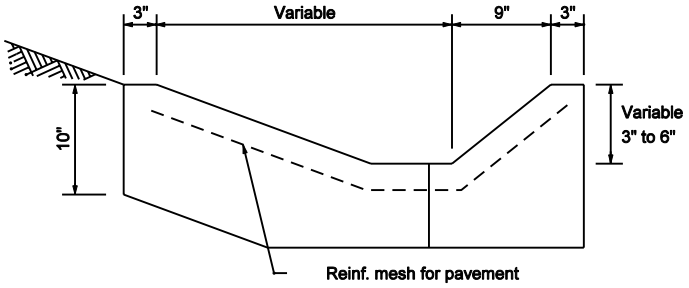

SECTION C-C

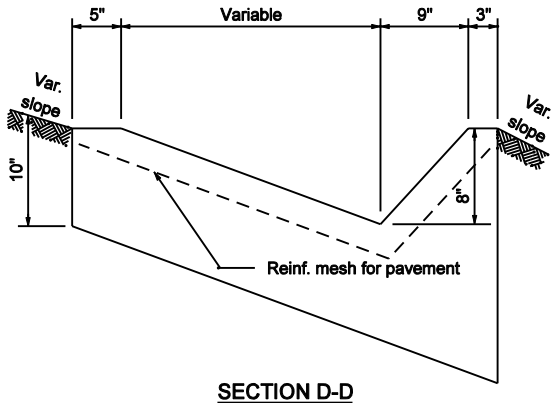

SECTION D-D

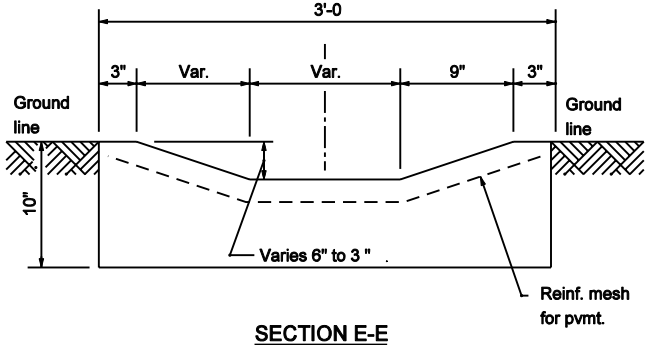

SECTION E-E

INDIANA DEPARTMENT OF TRANSPORTATION

REINFORCED CONCRETE GUTTER TURNOUT

MARCH 2003

STANDARD DRAWING NO. E 605-GTRC-01

RICHARD L. VanCLEAVE REGISTERED No. 9750 STATE OF INDIANA PROFESSIONAL ENGINEER

DESIGN STANDARDS ENGINEER

/s/ Richard L. VanCleave 3-03-03
DESIGN STANDARDS ENGINEER DATE

/s/ Richard K. Smutzer 3-03-03
CHIEF HIGHWAY ENGINEER DATE

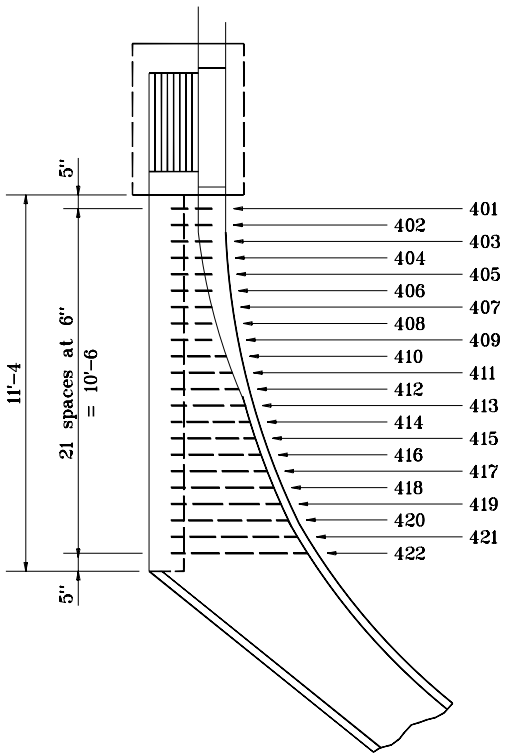

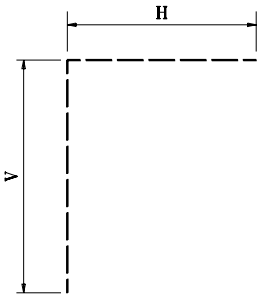

#4 BAR

MK	QTY.	SIZE	BAR LENGTHS		
			V	H	TOTAL
401	1	#4	2'-0	1'-3	3'-3
402				1'-4	3'-4
403				1'-5	3'-5
404				1'-6	3'-6
405				1'-7	3'-7
406				1'-8	3'-8
407				1'-9	3'-9
408				1'-10	3'-10
409				1'-11	3'-11
410				2'-0	4'-0
411				2'-2	4'-2
412				2'-4	4'-4
413				2'-6	4'-6
414				2'-8	4'-8
415				2'-10	4'-10
416				3'-0	5'-0
417				3'-4	5'-4
418				3'-6	5'-8
419				3'-11	5'-11
420				4'-2	6'-2
421				4'-6	6'-6
422			2'-0	4'-10	6'-10
423	3	#4	1'-3	3'-0	4'-3

MK 423 bars to be threaded, galvanized, and installed as shown in Detail B on Standard Drawing E 605-GTRC-01.

REINFORCING PLAN CONCRETE GUTTER TURNOUT

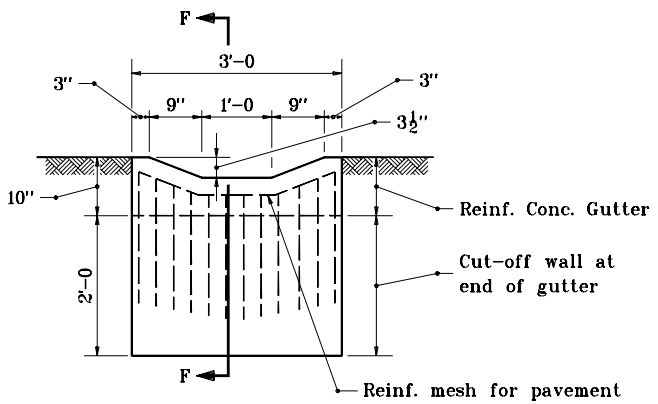

SECTION G-G

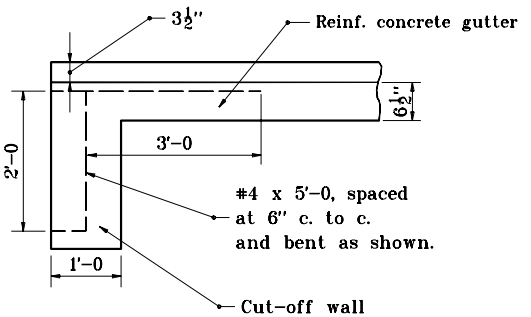

SECTION F-F

INDIANA DEPARTMENT OF TRANSPORTATION

REINFORCED CONCRETE GUTTER TURNOUT

SEPTEMBER 1997

STANDARD DRAWING NO. E 605-GTRC-02

ANTHONY L. UREMOVICH REGISTERED No. 18095 STATE OF INDIANA PROFESSIONAL ENGINEER

DESIGN STANDARDS ENGINEER

DETAILS PLACED IN THIS FORMAT 11-15-99

/s/ Anthony L. Uremovich 11-15-99
DESIGN STANDARDS ENGINEER DATE

/s/ Firooz Zandi 11-15-99
CHIEF HIGHWAY ENGINEER DATE

ORIGINALLY APPROVED 9-01-97

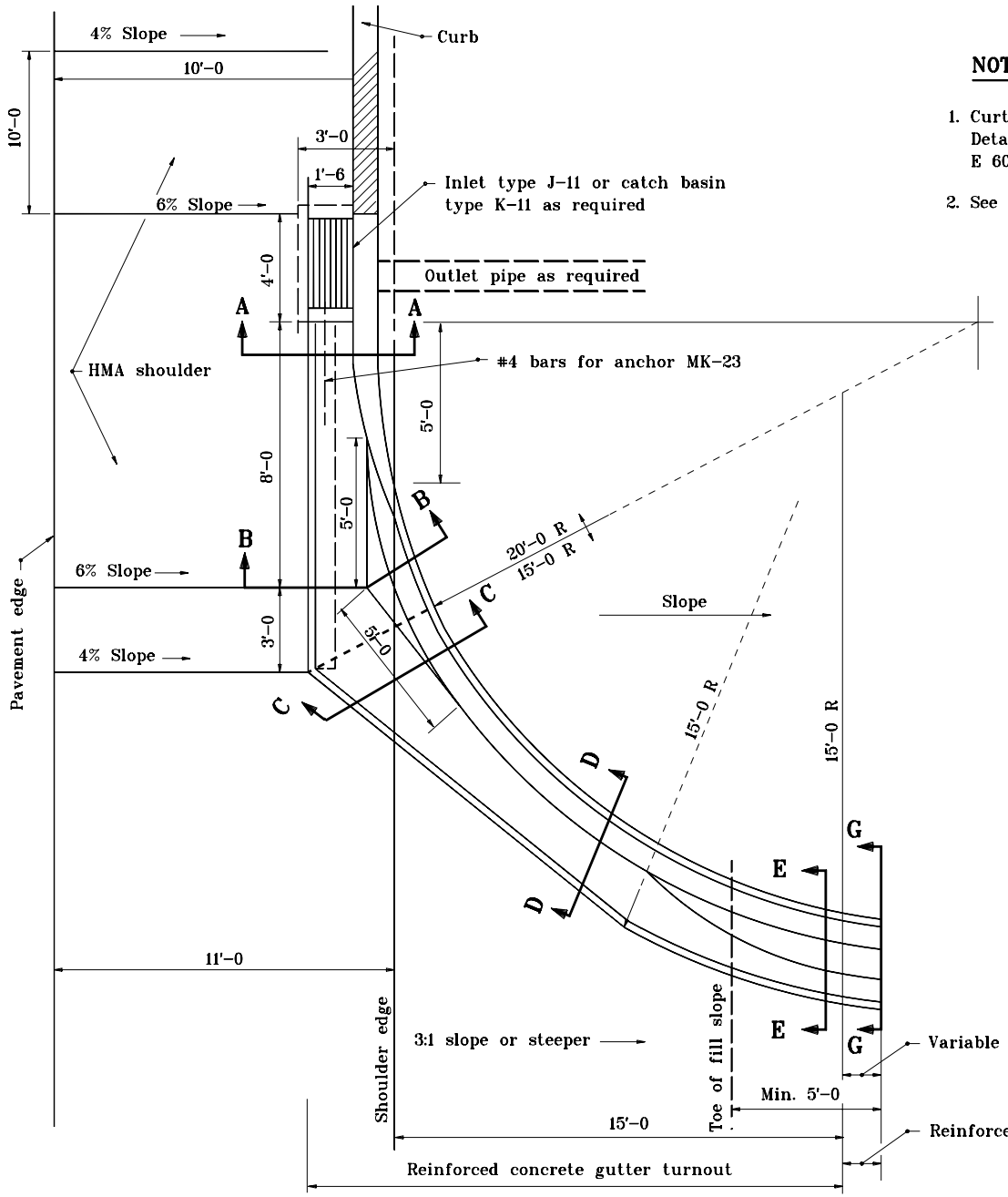

NOTES :

1. Curtain walls and #4 bars for anchor MK-23 shown in Detail A, Detail B, Section A-A, and Section B-B on Standard Drawing E 605-GTRC-01.
2. See Standard Drawing E 605-GTRC-02 for sections F-F and G-G.

INDIANA DEPARTMENT OF TRANSPORTATION

REINFORCED CONCRETE GUTTER TURNOUT

JANUARY 1999

STANDARD DRAWING NO. **E 605-GTRC-03**

ANTHONY L. UREMOVICH REGISTERED No. 18095 STATE OF INDIANA PROFESSIONAL ENGINEER

DESIGN STANDARDS ENGINEER

DETAILS PLACED IN THIS FORMAT	11-15-99
/s/ Anthony L. Uremovich, DESIGN STANDARDS ENGINEER	11-15-99
/s/ Firooz Zandi, CHIEF HIGHWAY ENGINEER	11-15-99
ORIGINALLY APPROVED	1-04-99

LEGEND

(1) Longitudinal joint

(3) Longitudinal construction joint

T = Nominal pavement thickness

Curve data variable
except tangent length = 50'–0

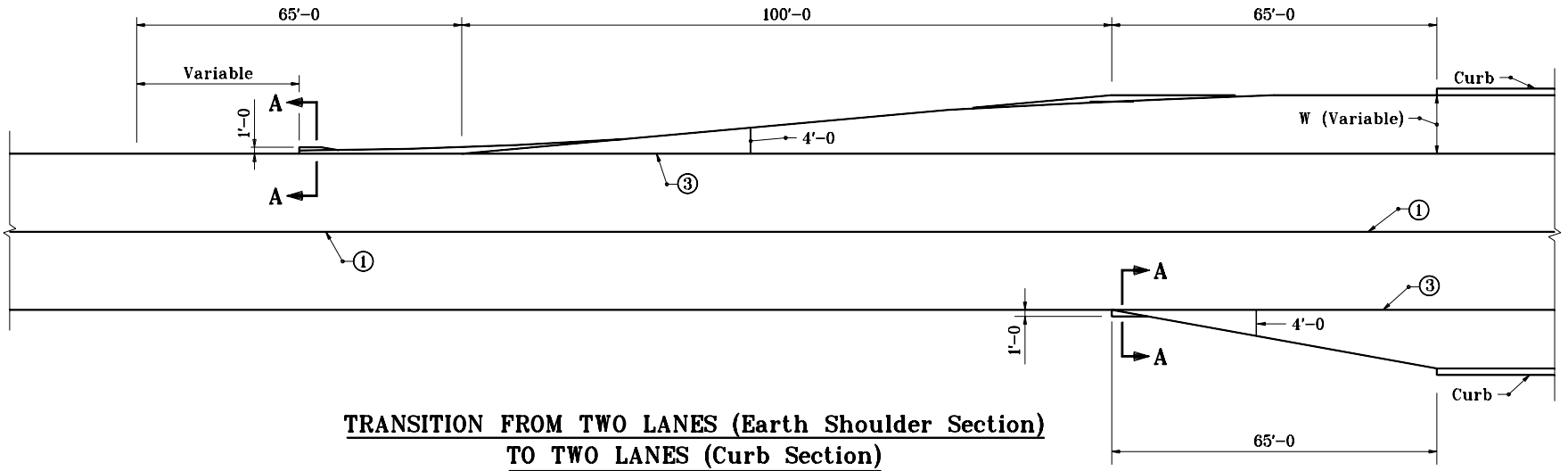

TRANSITION FROM TWO LANES (Earth Shoulder Section) TO TWO LANES (Curb Section)

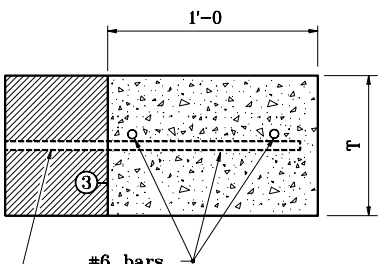

Omit dowel bars where pavement is in place.

SECTION A–A

INDIANA DEPARTMENT OF TRANSPORTATION

TRANSITION OF EARTH SHOULDER TO CURB SECTION

SEPTEMBER 1997

STANDARD DRAWING NO. **E 605–TSCS–01**

ANTHONY L. UREMOVICH REGISTERED No. 18095 STATE OF INDIANA PROFESSIONAL ENGINEER

DESIGN STANDARDS ENGINEER

DETAILS PLACED IN THIS FORMAT	11-15-99
/s/ Anthony L. Uremovich	11-15-99
DESIGN STANDARDS ENGINEER	DATE
/s/ Firooz Zandi	11-15-99
CHIEF HIGHWAY ENGINEER	DATE
ORIGINALLY APPROVED	9-01-97

INDEX	
SHEET NO.	SUBJECT
1	Pavement Corrugations, Index and General Notes
2	Shoulder Corrugations, HMA
3	Shoulder Corrugations, PCCP
4	Shoulder Corrugation Limits: Entrance and Exit Ramps
5	Shoulder Corrugation Limits for Approaches and Median Crossovers
6	Centerline Rumble Stripes
7	Edgeline Rumble Stripes
8	Shoulder Rumble Strips (Undivided Highway)
9	Rumble Stripe and Rumble Strip Limits: Intersection, Drive, Bridge, or Railroad

GENERAL NOTES:

1. Shoulder corrugations use a conventional millled pavement corrugation pattern.

2. Rumble strips and rumble stripes use a sinusoidal milled pavement corrugation pattern.

INDIANA DEPARTMENT OF TRANSPORTATION

PAVEMENT CORRUGATIONS,
INDEX AND GENERAL NOTES

SEPTEMBER 2023

STANDARD DRAWING NO. E 606-SHCG-01

DAVID H. BORUFF
REGISTERED
No.
60900348
STATE OF
INDIANA
PROFESSIONAL ENGINEER

05/04/23
DESIGN STANDARDS ENGINEER DATE

05/08/2023
CHIEF ENGINEER DATE

NOTES:

1. Continuous corrugation installation shall be used on interstates and intermittent installation shall be used on all other facilities.
2. Refer to E 606-SHCG-03 for corrugation instructions for HMA shoulders adjacent to a widened PCCP outside lane.

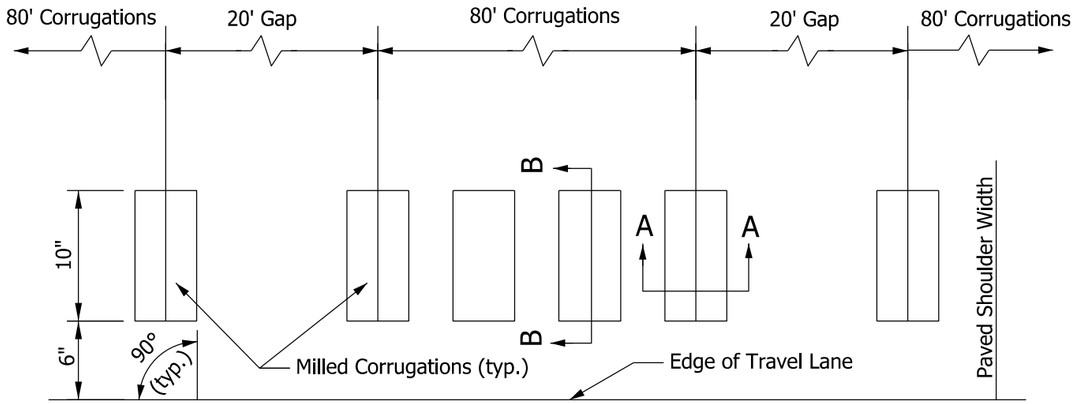

INTERMITTENT INSTALLATION
PLAN VIEW

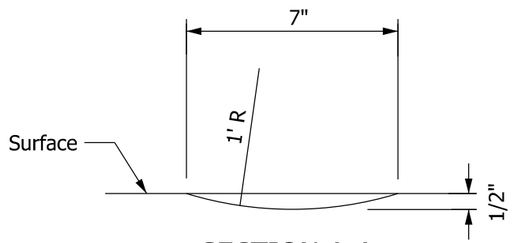

SECTION A-A

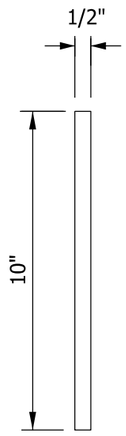

SECTION B-B

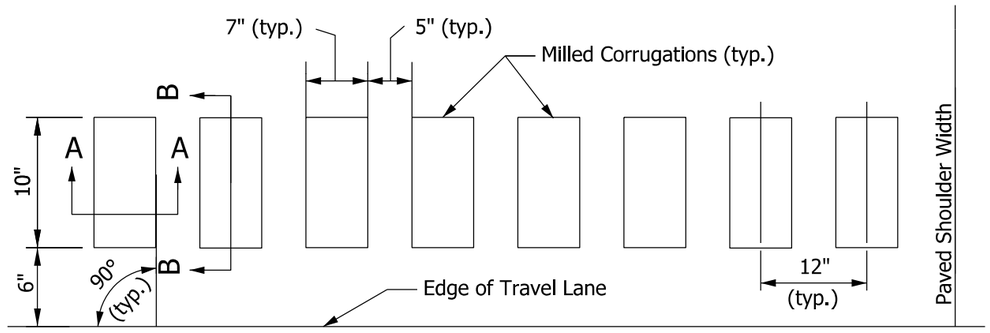

CONTINUOUS INSTALLATION
PLAN VIEW

INDIANA DEPARTMENT OF TRANSPORTATION

SHOULDER CORRUGATIONS, HMA

SEPTEMBER 2023

STANDARD DRAWING NO. E 606-SHCG-02

DAVID H. BORUFF
REGISTERED
No. 60900348
STATE OF INDIANA
PROFESSIONAL ENGINEER

David H Boruff — 05/04/23
DESIGN STANDARDS ENGINEER — DATE

05/08/2023
CHIEF ENGINEER — DATE

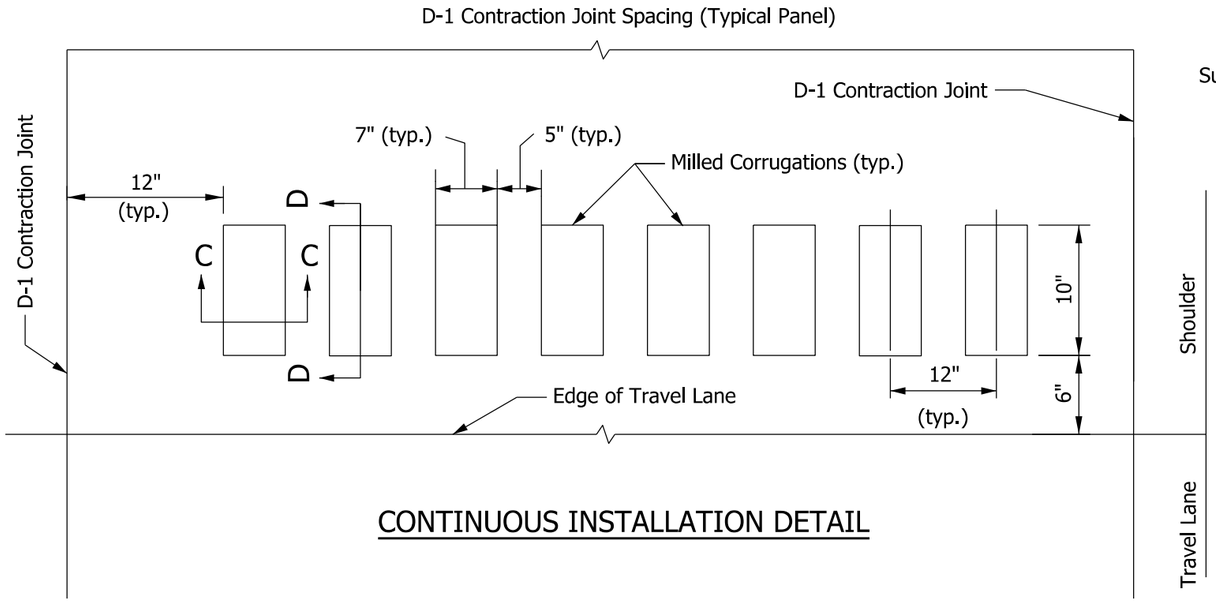

CONTINUOUS INSTALLATION DETAIL

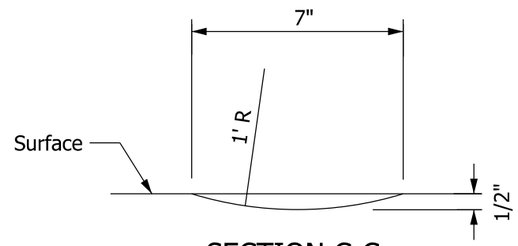

SECTION C-C

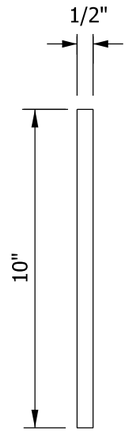

SECTION D-D

NOTES:

1. Continuous corrugations shall be required on every PCCP shoulder panel on interstates. Intermittent corrugations shall be required for all other facilities.
2. On facilities with a widened outside PCCP lane, the corrugations shall be installed on the portion of the PCCP located outside the edge of travel lane and in accordance with this sheet.

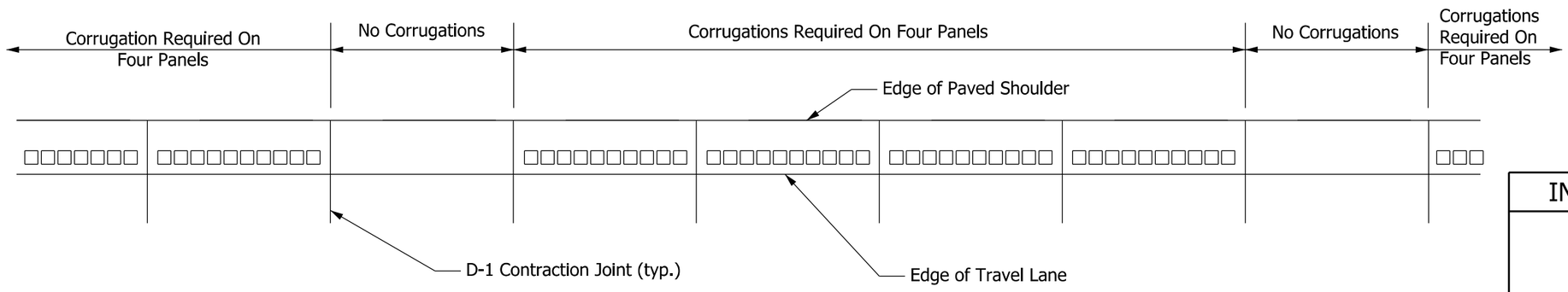

INTERMITTENT INSTALLATION DETAIL

INDIANA DEPARTMENT OF TRANSPORTATION

SHOULDER CORRUGATIONS, PCCP

SEPTEMBER 2023

STANDARD DRAWING NO. E 606-SHCG-03

DAVID H. BORUFF
REGISTERED
No.
60900348
STATE OF
INDIANA
PROFESSIONAL ENGINEER

05/04/23
DESIGN STANDARDS ENGINEER DATE

05/08/2023
CHIEF ENGINEER DATE

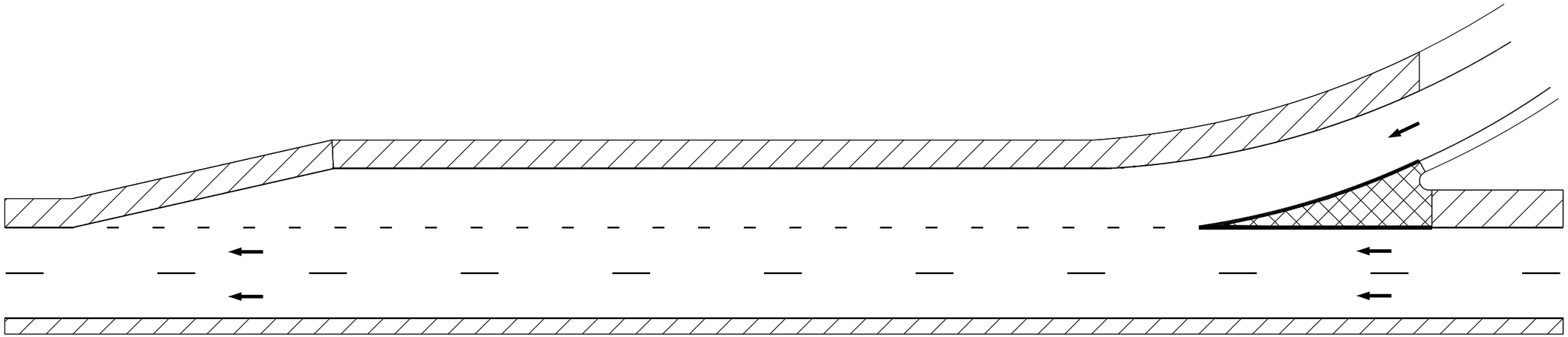

ENTRANCE RAMP

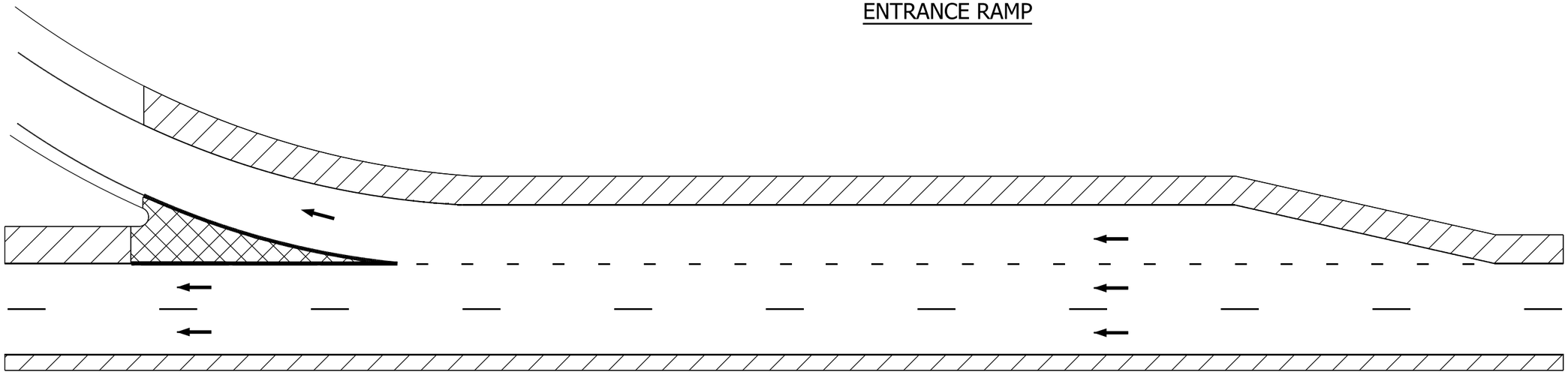

EXIT RAMP

LEGEND

- Gore Area (No Corrugations)
- Shoulder Corrugations
- Direction of Traffic

INDIANA DEPARTMENT OF TRANSPORTATION

SHOULDER CORRUGATION LIMITS: ENTRANCE AND EXIT RAMPS

SEPTEMBER 2023

STANDARD DRAWING NO. E 606-SHCG-04

DAVID H. BORUFF REGISTERED No. 60900348 STATE OF INDIANA PROFESSIONAL ENGINEER

David H. Boruff 05/04/23

DESIGN STANDARDS ENGINEER DATE

05/08/2023

CHIEF ENGINEER DATE

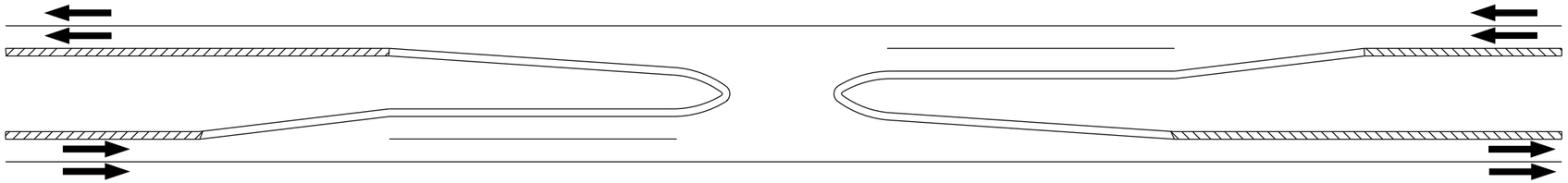

MEDIAN CROSSOVER / LEFT TURN LANE

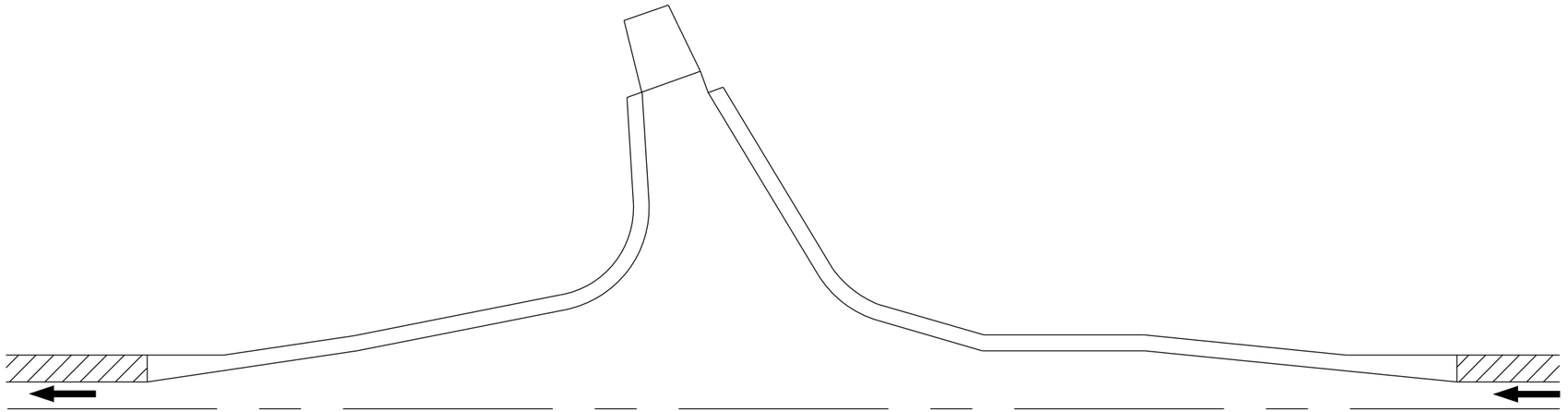

APPROACH WITH RIGHT TURN LANE

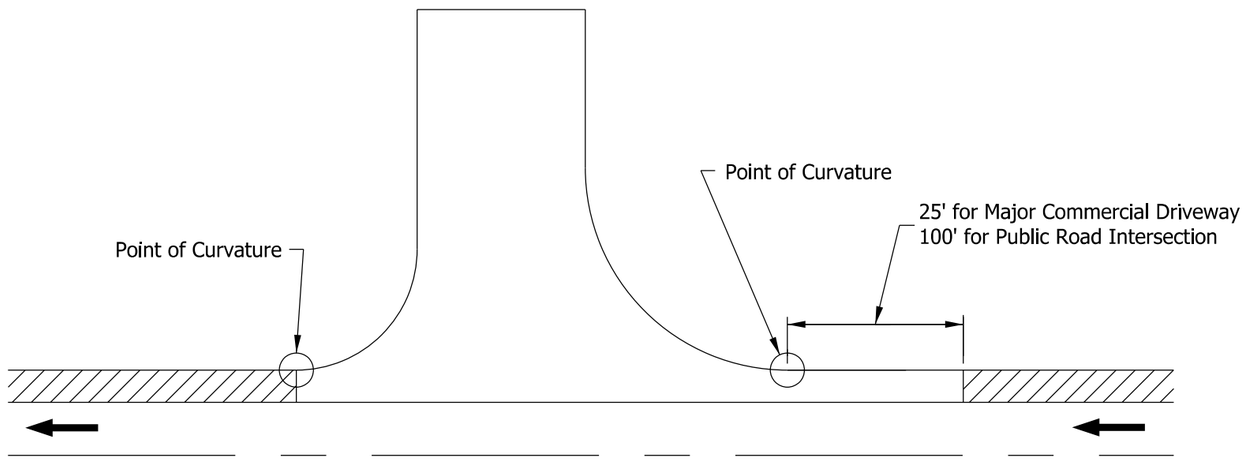

APPROACH WITHOUT RIGHT TURN LANE

LEGEND

Shoulder Corrugations

Direction of Traffic

INDIANA DEPARTMENT OF TRANSPORTATION

SHOULDER CORRUGATION LIMITS
FOR APPROACHES AND MEDIAN CROSSOVERS

SEPTEMBER 2023

STANDARD DRAWING NO. E 606-SHCG-05

DAVID H. BORUFF
REGISTERED
No. 60900348
STATE OF INDIANA
PROFESSIONAL ENGINEER

David H Boruff 05/04/23
DESIGN STANDARDS ENGINEER DATE

05/08/2023
CHIEF ENGINEER DATE

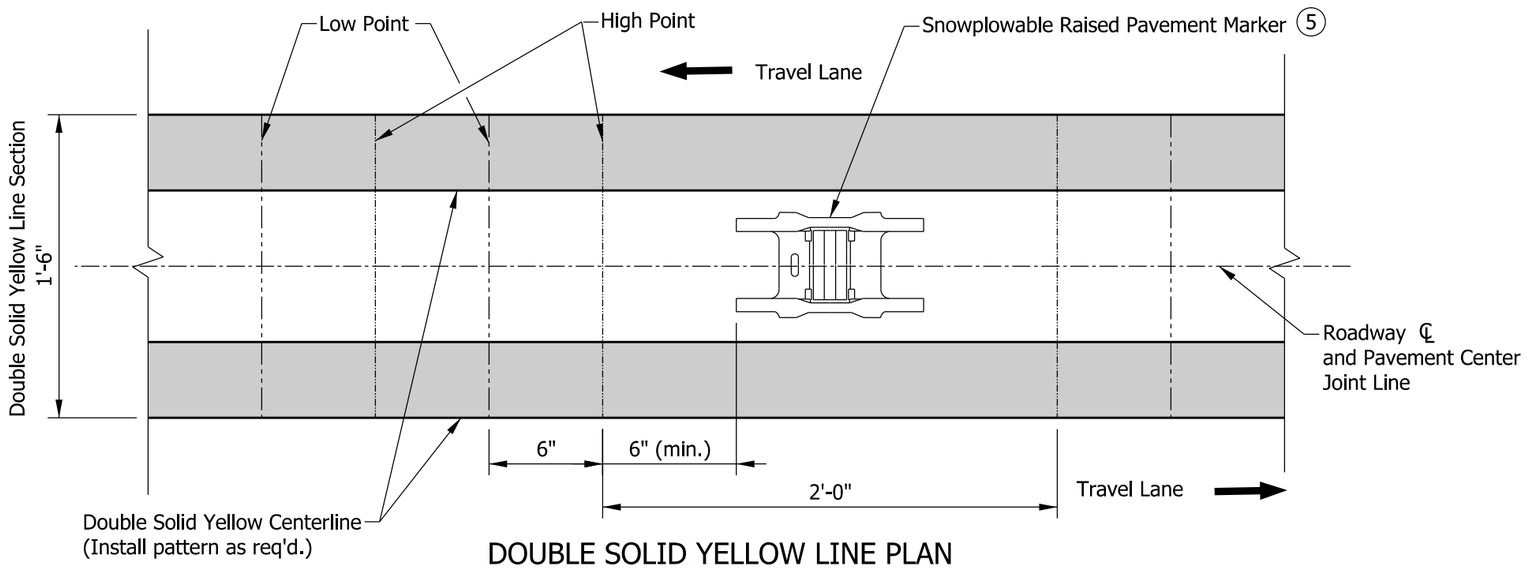

DOUBLE SOLID YELLOW LINE PLAN

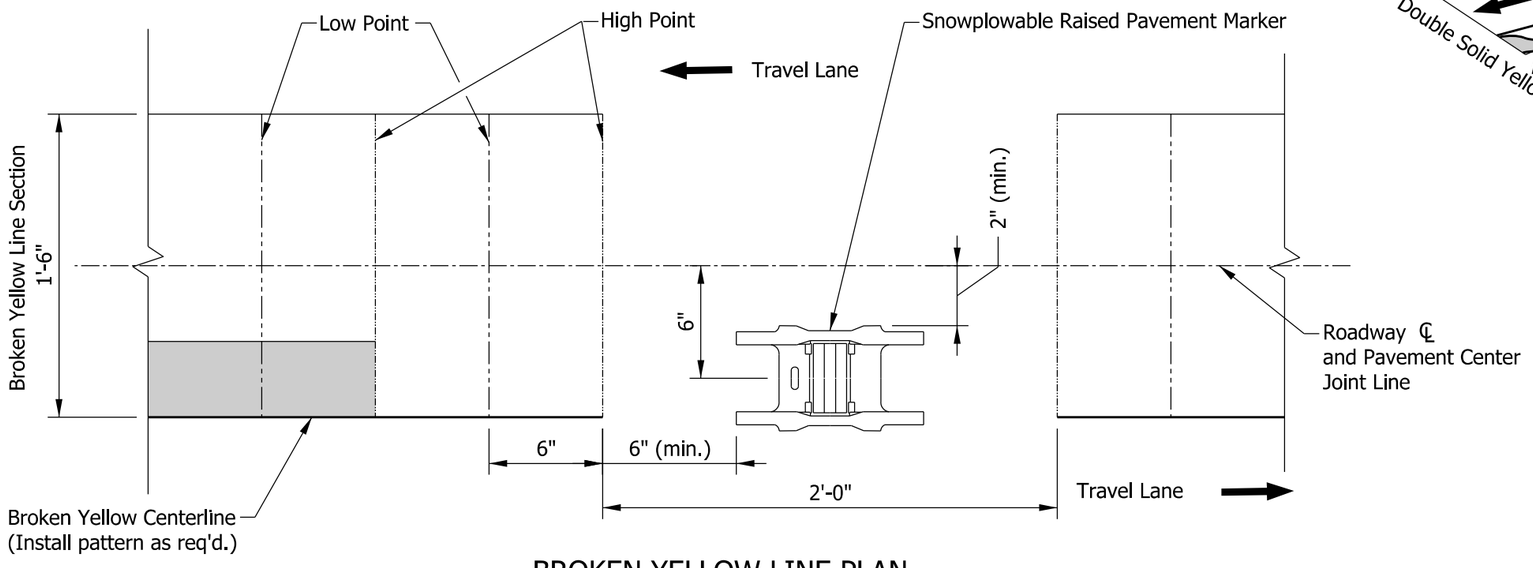

BROKEN YELLOW LINE PLAN

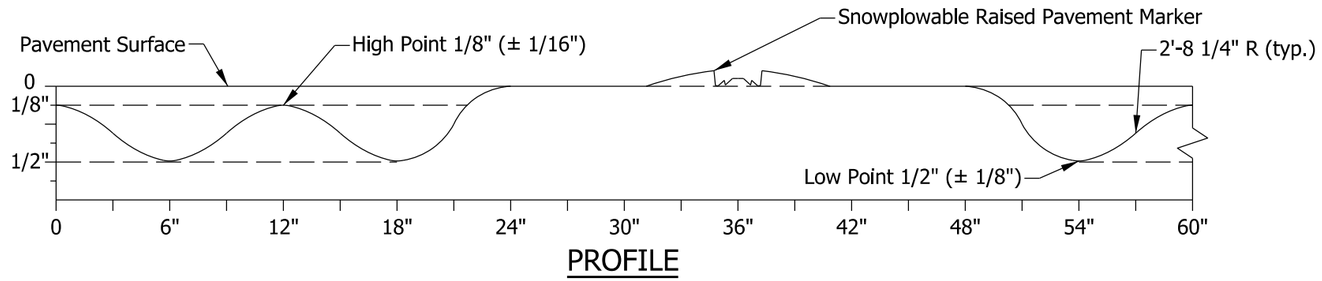

PROFILE

NOTES:

1. Rumble stripe shall be centered about the roadway centerline.
2. The liquid asphalt sealant width shall be a minimum of 24 in. centered on the pavement center joint line, and shall be extended, where directed, to provide coverage beyond the edge of the corrugation.
3. The corrugations shall be no closer than 6 in. to a casting or a concrete pavement transverse joint.
4. See Standard Drawing E 808-MKRM series for spacing of snowplowable raised pavement markers.

(5) On PCCP, the double solid yellow line shall be treated as a restricted area for snowplowable raised pavement markers and handled in accordance with 808.11(b).

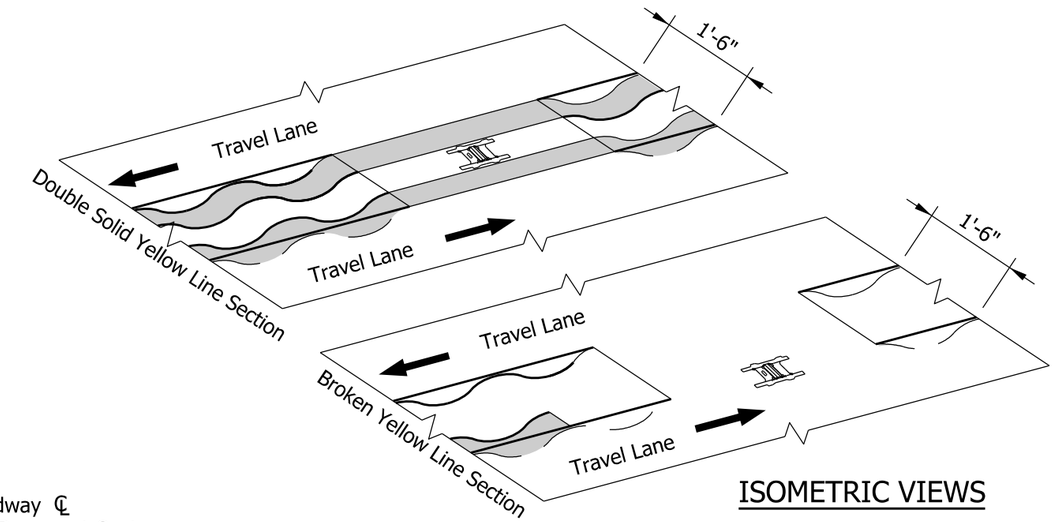

ISOMETRIC VIEWS

INDIANA DEPARTMENT OF TRANSPORTATION

CENTERLINE RUMBLE STRIPES

SEPTEMBER 2023

STANDARD DRAWING NO. E 606-SHCG-06

DAVID H. BORUFF
REGISTERED
No. 60900348
STATE OF INDIANA
PROFESSIONAL ENGINEER

David H Boruff 05/04/23
DESIGN STANDARDS ENGINEER DATE

05/08/2023
CHIEF ENGINEER DATE

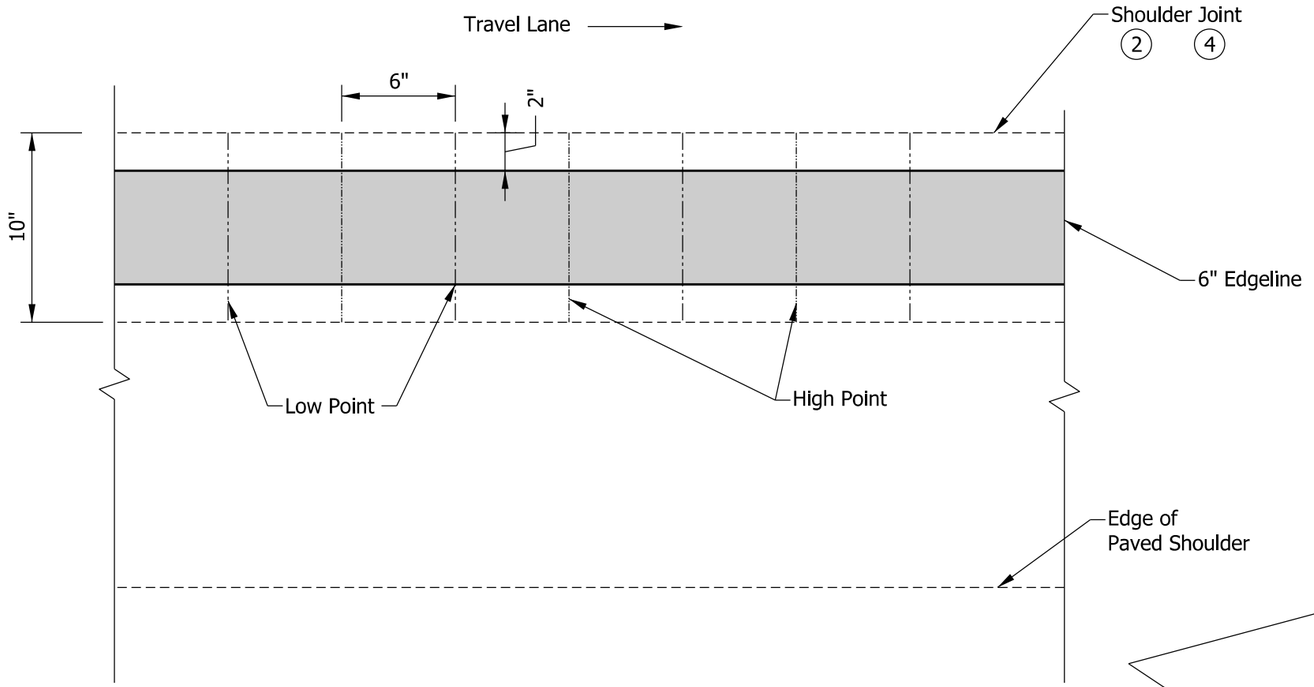

PLAN

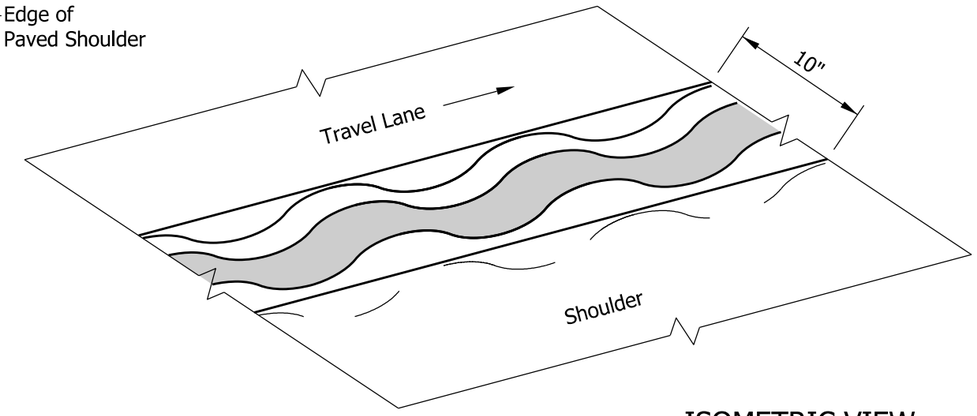

ISOMETRIC VIEW

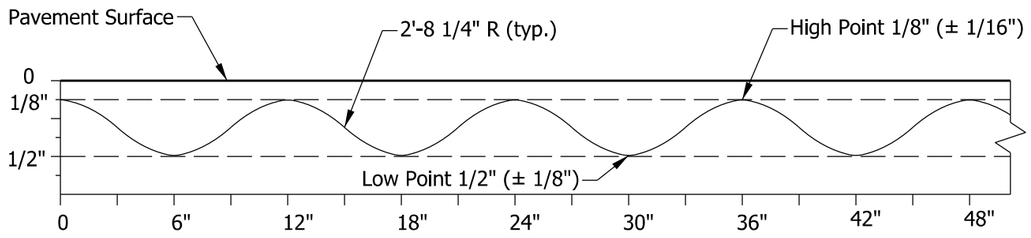

PROFILE

NOTES:

1. Where the paved shoulder width is at least 2 ft, a 12-ft longitudinal gap in the corrugations shall be provided every 60 ft to accommodate bicycles.

(2) If shoulder joint is present, the liquid asphalt sealant width shall be a minimum of 24 in. centered on the shoulder joint line.

3. The corrugations shall be no closer than 6 in. to a casting or a concrete pavement transverse joint.

(4) Near edge of travel lane if shoulder joint is not apparent.

INDIANA DEPARTMENT OF TRANSPORTATION

EDGELINE RUMBLE STRIPES

SEPTEMBER 2023

STANDARD DRAWING NO. E 606-SHCG-07

DAVID H. BORUFF
REGISTERED
No. 60900348
STATE OF INDIANA
PROFESSIONAL ENGINEER

05/04/23
DESIGN STANDARDS ENGINEER — DATE

05/08/2023
CHIEF ENGINEER — DATE

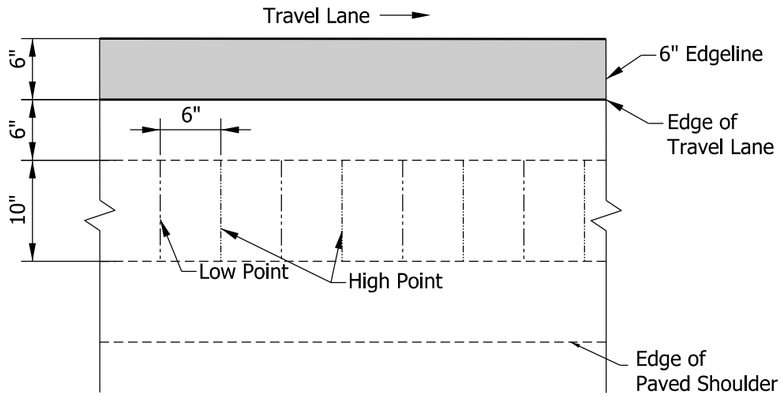

PLAN VIEW - WITH NO SHOULDER JOINT

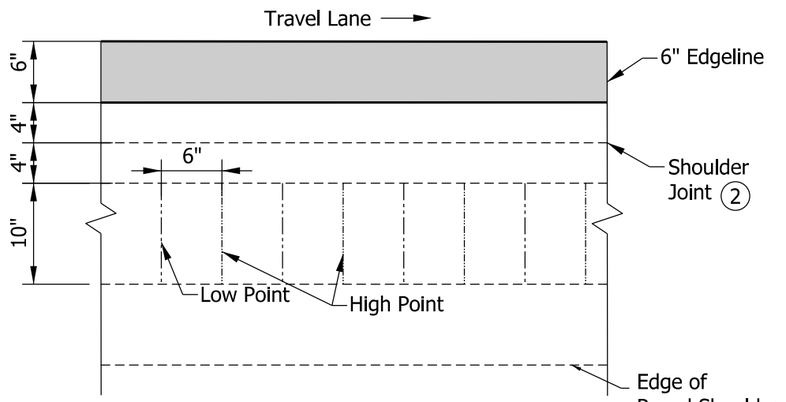

PLAN VIEW - WITH SHOULDER JOINT

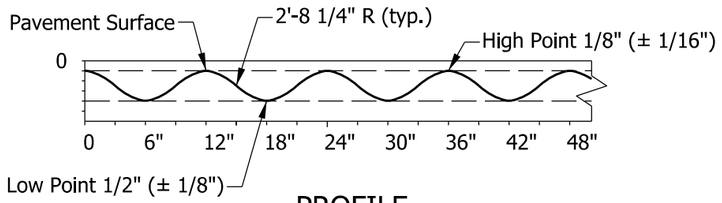

PROFILE

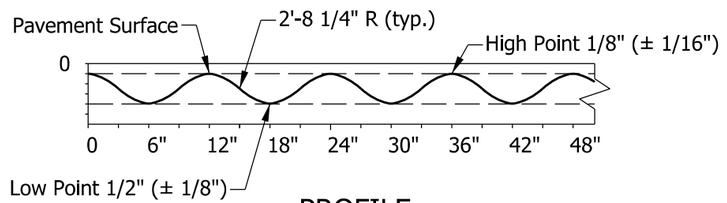

PROFILE

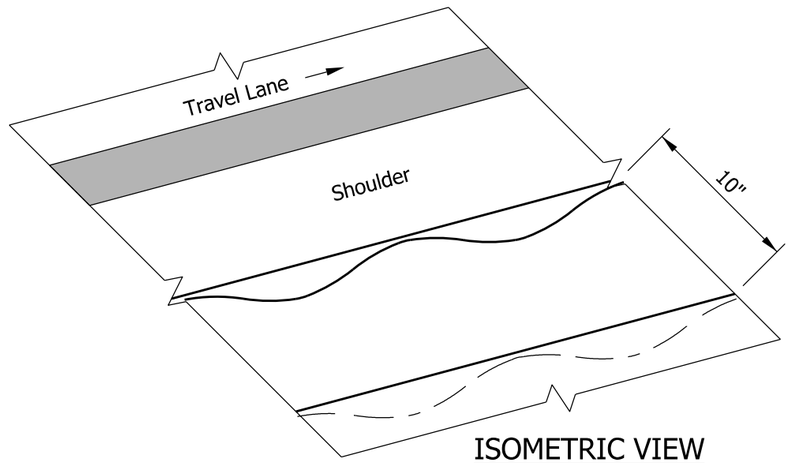

ISOMETRIC VIEW

NOTES:

1. Where the paved shoulder width is at least 3 ft, a 12 ft longitudinal gap in the corrugations shall be provided every 60 ft to accommodate bicycles.

(2) The liquid asphalt sealant width shall be a minimum of 24 in. centered on the shoulder joint line.

3. The corrugations shall be no closer than 6 in. to a casting.

INDIANA DEPARTMENT OF TRANSPORTATION

SHOULDER RUMBLE STRIPS
(UNDIVIDED HIGHWAY)

SEPTEMBER 2023

STANDARD DRAWING NO. E 606-SHCG-08

DAVID H. BORUFF
REGISTERED
No.
60900348
STATE OF
INDIANA
PROFESSIONAL ENGINEER

David H Boruff 05/04/23
DESIGN STANDARDS ENGINEER DATE

05/08/2023
CHIEF ENGINEER DATE

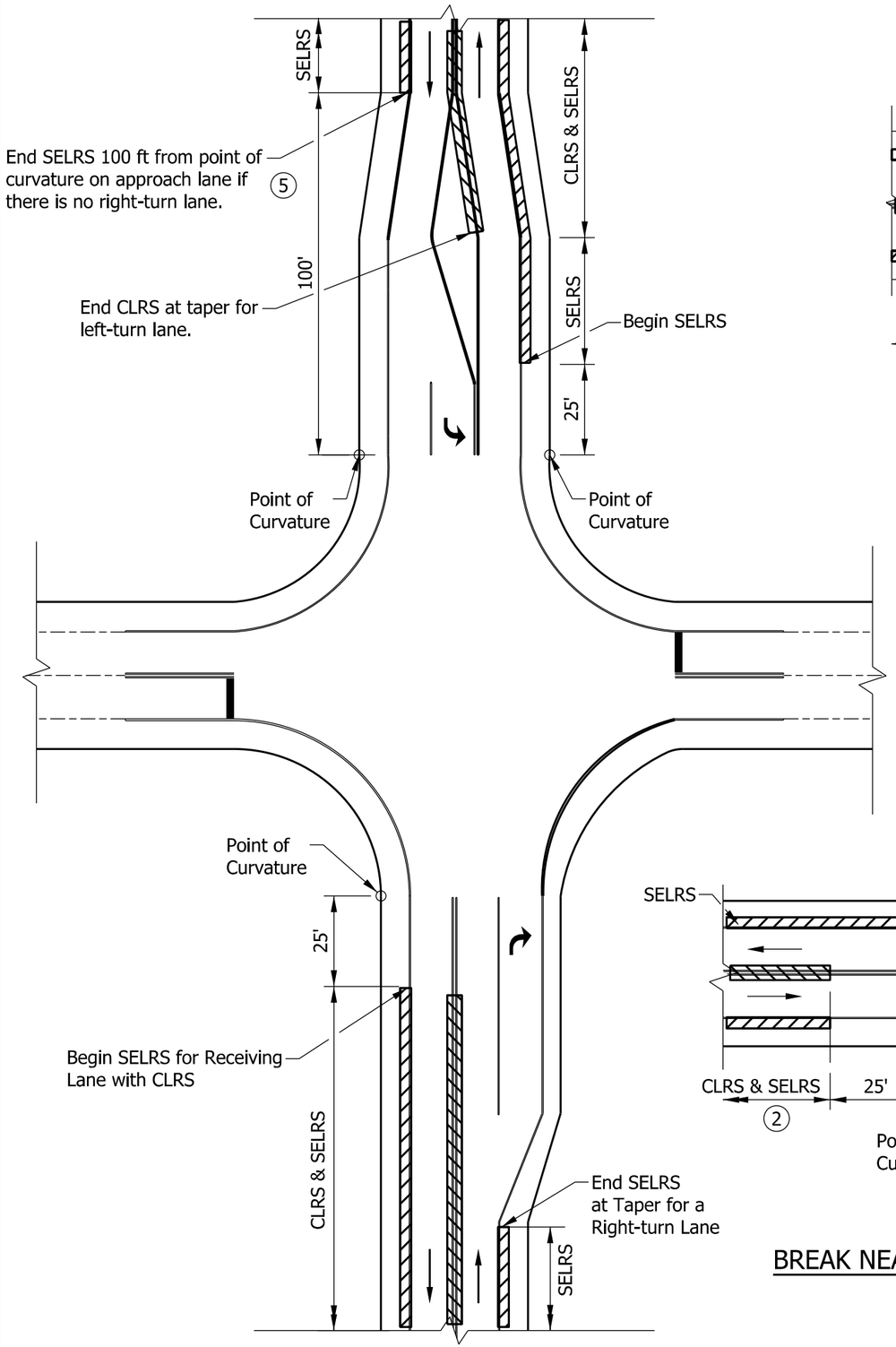

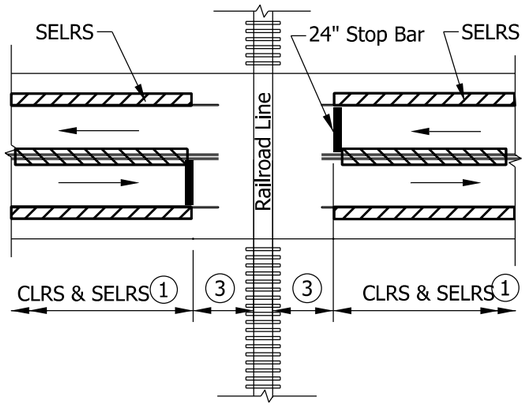

BREAK NEAR A RAILROAD CROSSING

NOTES:

1. Corrugations shall begin or end at the stop bar location.
2. Corrugations shall be continued through driveway access points for minor driveways.
3. Gap shall be 15 ft for a railroad crossing without gates or signals and 25 ft for railroad crossing with gates or signals.
4. For a bridge deck, end corrugations a maximum of 5 ft and a minimum of 6 in. before an approach slab and begin corrugations a minimum of 6 in. and a maximum of 5 ft after the approach slab on the other side of the bridge deck.
5. If there is no right-turn lane and the paved shoulder width is 8 ft or greater the corrugations shall end 400 ft from the point of curvature on approach lane.

KEY:

CLRS = Centerline Longitudinal Rumble Stripe
SELRS = Shoulder Longitudinal Rumble Strip or Edgeline Longitudinal Rumble Stripe

BREAK NEAR AN INTERSECTION

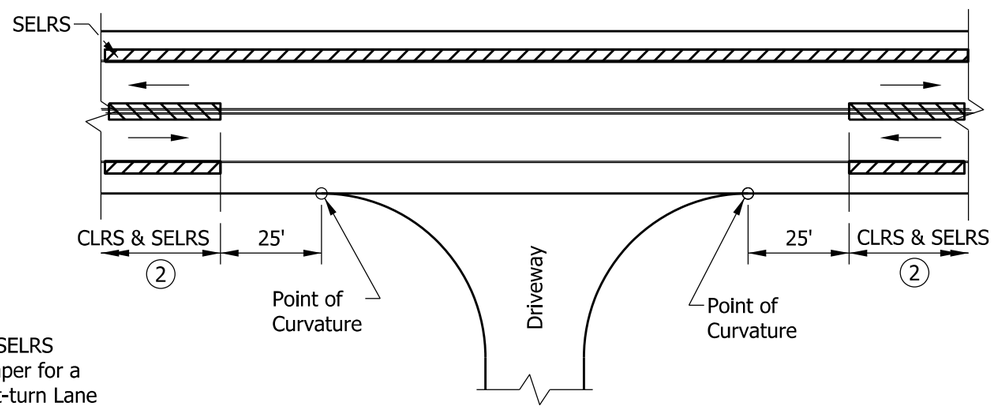

BREAK NEAR A COMMERCIAL OR INDUSTRIAL DRIVEWAY

INDIANA DEPARTMENT OF TRANSPORTATION

RUMBLE STRIPE AND RUMBLE STRIP LIMITS:
NEAR AN INTERSECTION,
DRIVE, BRIDGE, OR RAILROAD
SEPTEMBER 2023

STANDARD DRAWING NO. E 606-SHCG-09

DAVID H. BORUFF REGISTERED No. 60900348 STATE OF INDIANA PROFESSIONAL ENGINEER

David H Boruff 05/04/23
DESIGN STANDARDS ENGINEER DATE

05/08/2023
CHIEF ENGINEER DATE

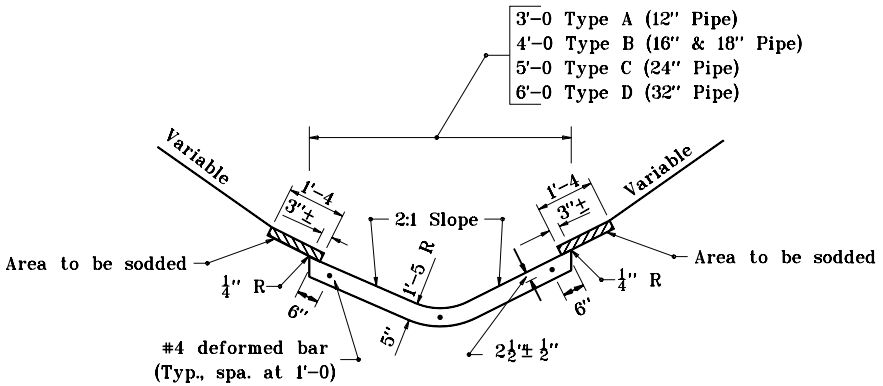

ELEVATION VIEW

PAVED SIDE DITCH TYPES A THROUGH D

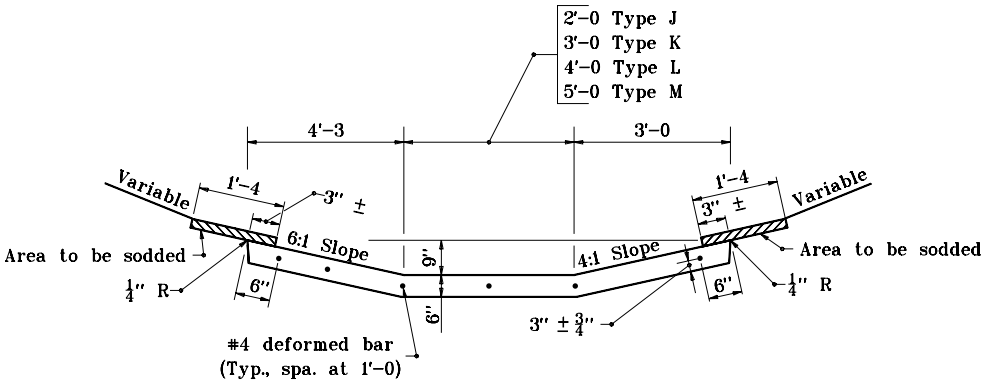

ELEVATION VIEW

PAVED SIDE DITCH TYPES J THROUGH M

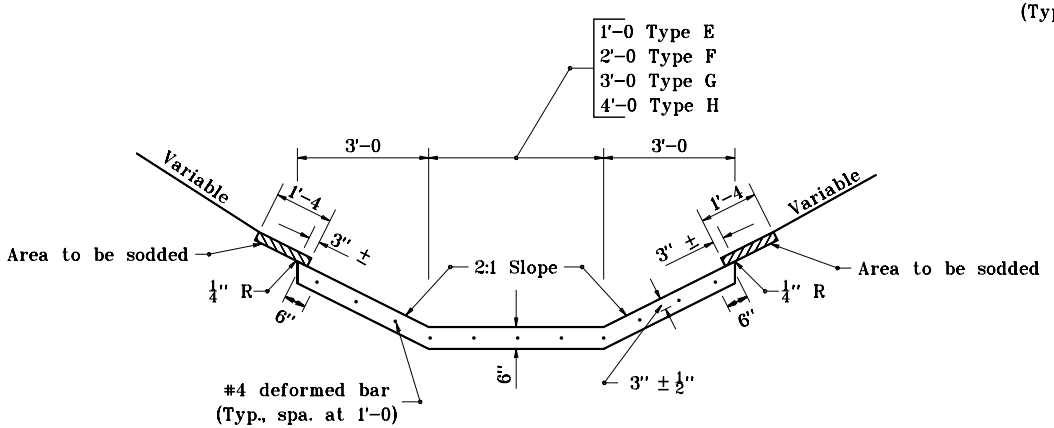

ELEVATION VIEW

PAVED SIDE DITCH TYPES E THROUGH H

INDIANA DEPARTMENT OF TRANSPORTATION

PAVED SIDE DITCH ELEVATIONS

SEPTEMBER 2000

STANDARD DRAWING NO. **E 607–PSDT–01**

ANTHONY L. UREMOVICH REGISTERED No. 18095 STATE OF INDIANA PROFESSIONAL ENGINEER

DESIGN STANDARDS ENGINEER

/s/ Anthony L. Uremovich 9–01–00
DESIGN STANDARDS ENGINEER — DATE

/s/ Firooz Zandi 9–01–00
CHIEF HIGHWAY ENGINEER — DATE

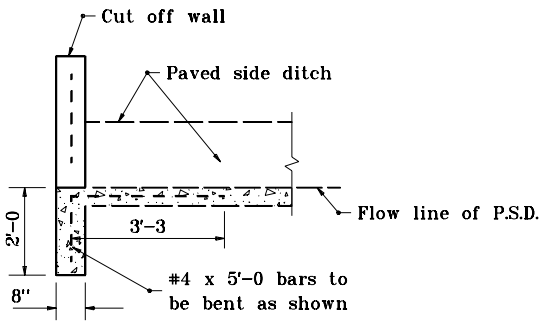

SECTION A-A

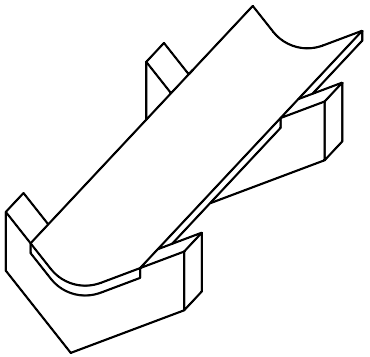

ISOMETRIC VIEW

PAVED SIDE DITCH TYPE A THROUGH D

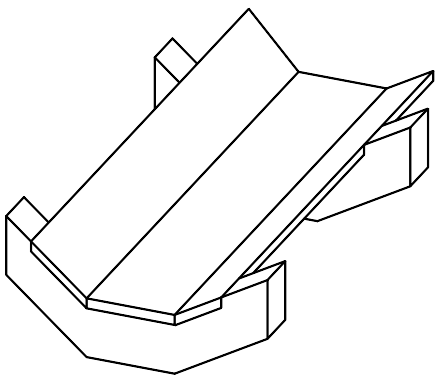

ISOMETRIC VIEW

PAVED SIDE DITCH TYPES J THROUGH M

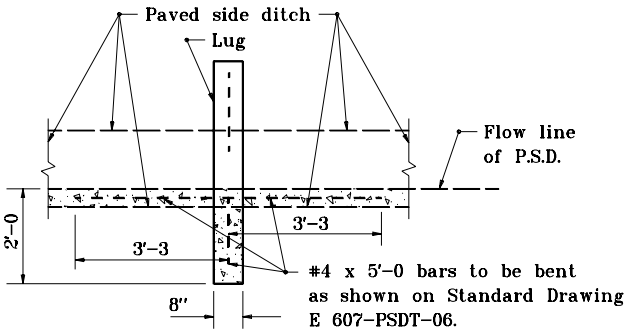

SECTION B-B

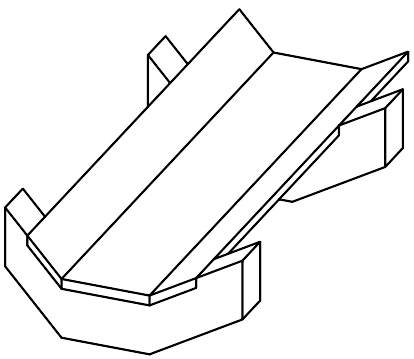

ISOMETRIC VIEW

PAVED SIDE DITCH TYPE E THROUGH H

INDIANA DEPARTMENT OF TRANSPORTATION

PAVED SIDE DITCH SECTIONS AND ISOMETRICS

SEPTEMBER 1997

STANDARD DRAWING NO. **E 607-PSDT-02**

ANTHONY L. UREMOVICH REGISTERED No. 18095 STATE OF INDIANA PROFESSIONAL ENGINEER

DESIGN STANDARDS ENGINEER

DETAILS PLACED IN THIS FORMAT 11-15-99

/s/ Anthony L. Uremovich 11-15-99
DESIGN STANDARDS ENGINEER DATE

/s/ Firooz Zandi 11-15-99
CHIEF HIGHWAY ENGINEER DATE

ORIGINALLY APPROVED 9-01-97

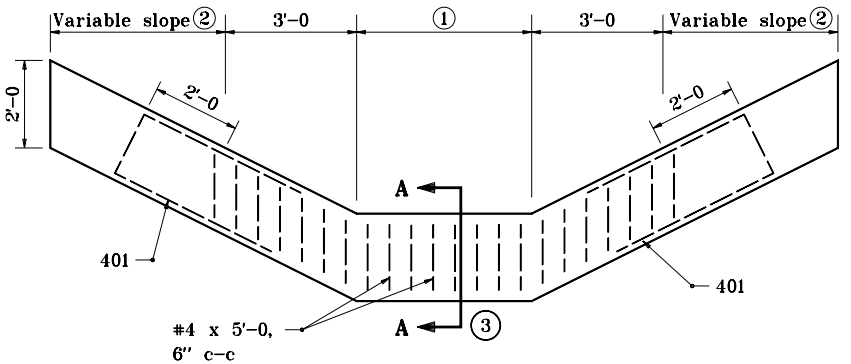

ELEVATION VIEW

CUT-OFF WALL FOR PAVED SIDE DITCH TYPES E THROUGH H

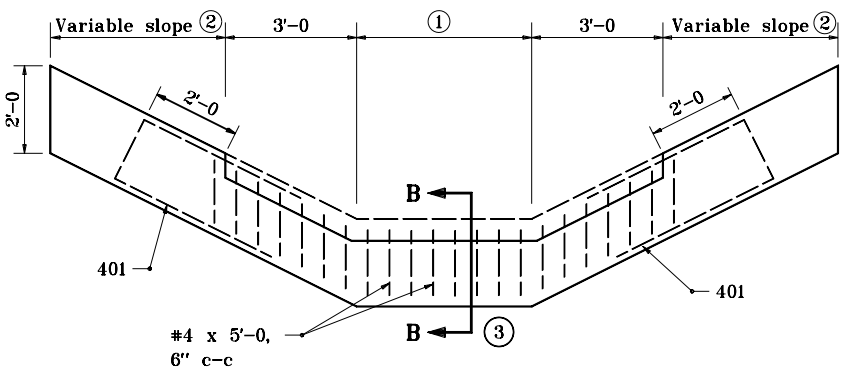

ELEVATION VIEW

LUG FOR PAVED SIDE DITCH TYPES E THROUGH H

GENERAL NOTES

① 1'-0 For Type E
2'-0 For Type F
3'-0 For Type G
4'-0 For Type H

② 3'-0 For Type E & F
4'-0 For Type G & H

③ See Standard Drawing E 607-PSDT-02 for Sections A-A and B-B.

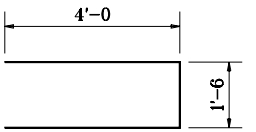

401 x 9'-6

INDIANA DEPARTMENT OF TRANSPORTATION

PAVED SIDE DITCH CUT-OFF WALL AND LUG

SEPTEMBER 1997

STANDARD DRAWING NO. **E 607-PSDT-03**

ANTHONY L. UREMOVICH REGISTERED No. 18095 STATE OF INDIANA PROFESSIONAL ENGINEER

DESIGN STANDARDS ENGINEER

DETAILS PLACED IN THIS FORMAT	11-15-99
/s/ Anthony L. Uremovich	11-15-99
DESIGN STANDARDS ENGINEER	DATE
/s/ Firooz Zandi	11-15-99
CHIEF HIGHWAY ENGINEER	DATE
ORIGINALLY APPROVED	9-01-97

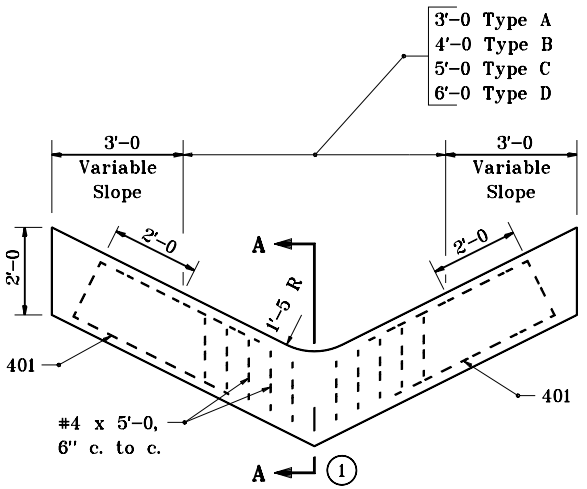

ELEVATION VIEW

CUT-OFF WALL FOR PAVED SIDE DITCH TYPES A THROUGH D

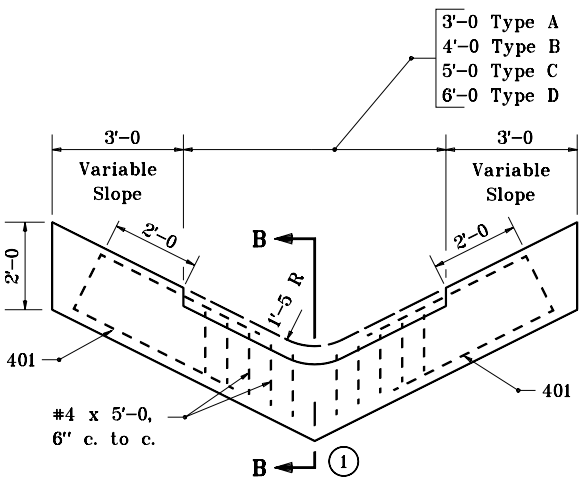

ELEVATION VIEW

LUG FOR PAVED SIDE DITCH TYPES A THROUGH D

GENERAL NOTES

(1) See Standard Drawing E 607-PSDT-02 for Sections A-A and B-B.

2. See Standard Drawing E 607-PSDT-03 for 401 bending diagram.

INDIANA DEPARTMENT OF TRANSPORTATION

PAVED SIDE DITCH CUT-OFF WALL AND LUG

SEPTEMBER 1997

STANDARD DRAWING NO. **E 607-PSDT-04**

ANTHONY L. UREMOVICH REGISTERED No. 18095 STATE OF INDIANA PROFESSIONAL ENGINEER

DESIGN STANDARDS ENGINEER

DETAILS PLACED IN THIS FORMAT 11-15-99

/s/ Anthony L. Uremovich 11-15-99
DESIGN STANDARDS ENGINEER DATE

/s/ Firooz Zandi 11-15-99
CHIEF HIGHWAY ENGINEER DATE

ORIGINALLY APPROVED 9-01-97

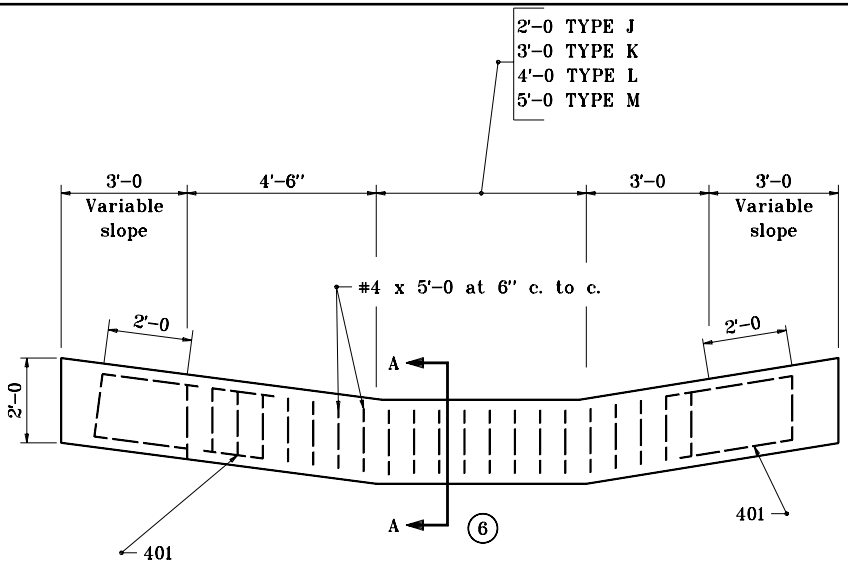

ELEVATION VIEW
CUT-OFF WALL FOR PAVED SIDE DITCH TYPES J THROUGH M

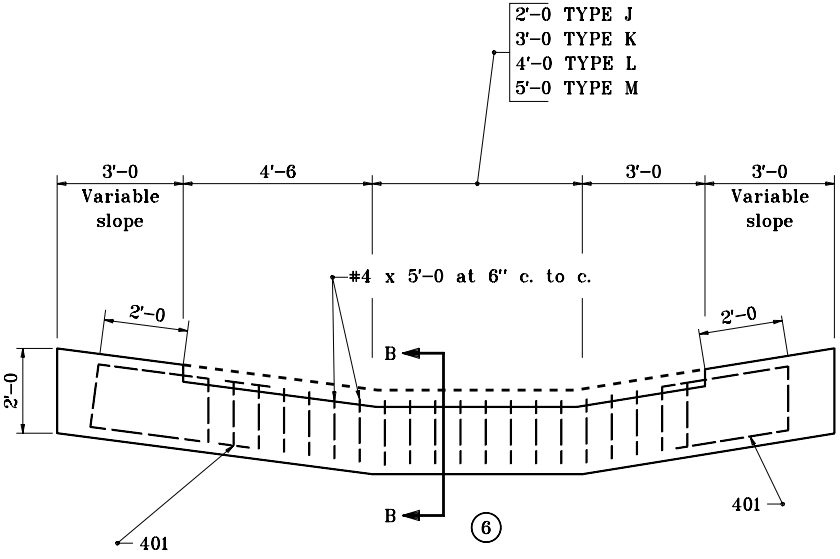

ELEVATION VIEW
LUG FOR PAVED SIDE DITCH TYPES J THROUGH M

GENERAL NOTES

1. The 6:1 sloped side shall be placed nearest the roadway.

2. Cutt-off walls shall be used at the begining and end of all paved side ditch.

3. Lugs shall be used at the following locations:

   a. 10 ft downslope from a grade change.
   b. 10 ft downslope from the intersection of different types of paved side ditch.
   c. At the downslope end of a transition between different types of paved side ditch.
   d. At the intervals as follows:

Interval	Grade
200 ft	3% to 5%
150 ft	5% to 8%
100 ft	8% to 10%
50 ft	10% & above

4. Paved side ditch transitions shall be required at intersections with earth ditches and pipe culverts. These transitions shall be converted to equivalent lengths of the type of paved side ditch specified at these locations.

5. Transitions of 10 ft or less shall be required between two different types of paved side ditch. Such transitions shall be converted to equivalent lengths of the larger type of paved side ditch specified at these locations.

(6) See Standard Drawing E 607-PSDT-04 for Sections A-A and B-B.

7. See Standard Drawing E 607-PSDT-03 for 401 bending diagram.

INDIANA DEPARTMENT OF TRANSPORTATION

P.S.D. CUT-OFF WALL & LUG AND GENERAL NOTES

JANUARY 2000

STANDARD DRAWING NO. **E 607-PSDT-05**

ANTHONY L. UREMOVICH REGISTERED No. 18095 STATE OF INDIANA PROFESSIONAL ENGINEER

DESIGN STANDARDS ENGINEER

/s/ Anthony L. Uremovich 1-03-00
DESIGN STANDARDS ENGINEER — DATE

/s/ Firooz Zandi 1-03-00
CHIEF HIGHWAY ENGINEER — DATE

GENERAL NOTES

1. See Standard Drawing E 607-PSDT-02 for Section B-B.

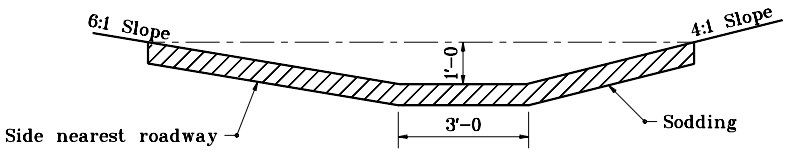

STANDARD 3' BOTTOM DITCH

(LOCATED WITHIN CLEAR ZONE)

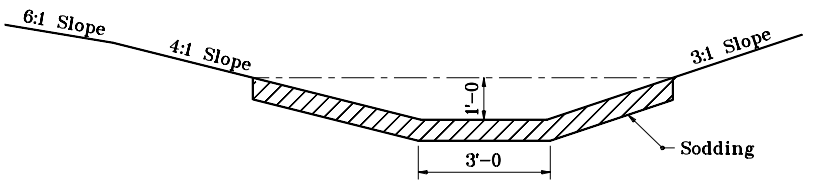

SPECIAL 3' BOTTOM DITCH

(LOCATED BEYOND CLEAR ZONE)

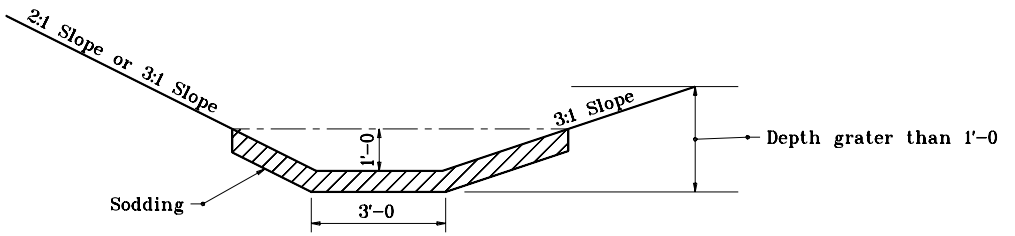

SPECIAL 3' BOTTOM DITCH

(LOCATED BEYOND CLEAR ZONE)

SODDED DITCH DETAILS

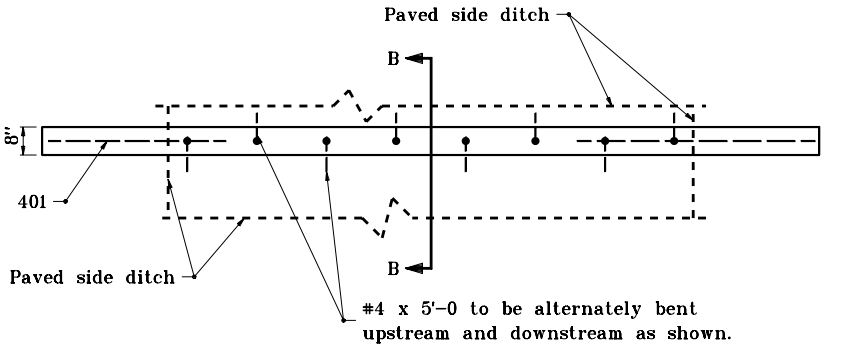

PLAN VIEW OF LUG (TYPICAL FOR ALL TYPES)

INDIANA DEPARTMENT OF TRANSPORTATION

P.S.D. LUGS & SODDED DITCH DETAILS

SEPTEMBER 1997

STANDARD DRAWING NO. **E 607-PSDT-06**

ANTHONY L. UREMOVICH REGISTERED No. 18095 STATE OF INDIANA PROFESSIONAL ENGINEER

DESIGN STANDARDS ENGINEER

DETAILS PLACED IN THIS FORMAT 7-27-99

/s/ Anthony L. Uremovich 7-27-99
DESIGN STANDARDS ENGINEER DATE

/s/ Firooz Zandi 7-27-99
CHIEF HIGHWAY ENGINEER DATE

ORIGINALLY APPROVED 9-01-97

GENERAL NOTES

(1) 660#/syd HMA mixture for patching required. Width of patch to be equal to width of asphalt shoulder in place.

(2) For pavement grades of 1% or steeper.

(3) For pavement grades of flatter than 1%.

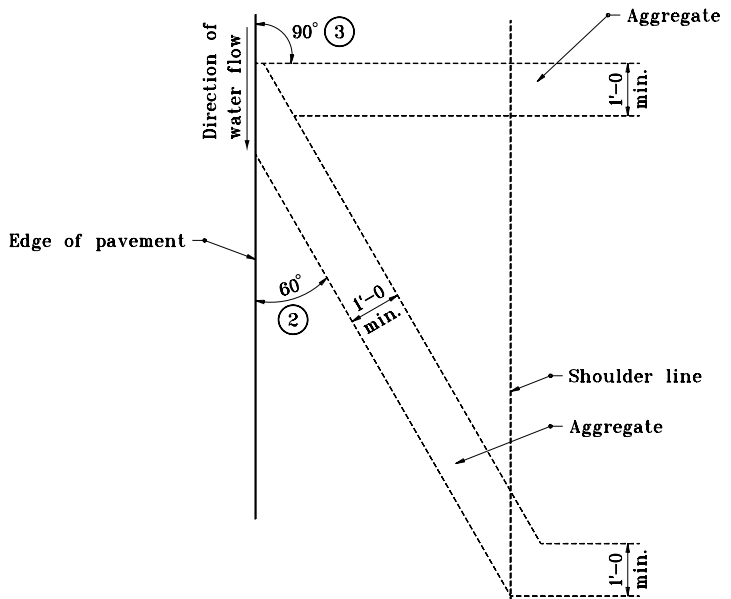

PLAN VIEW

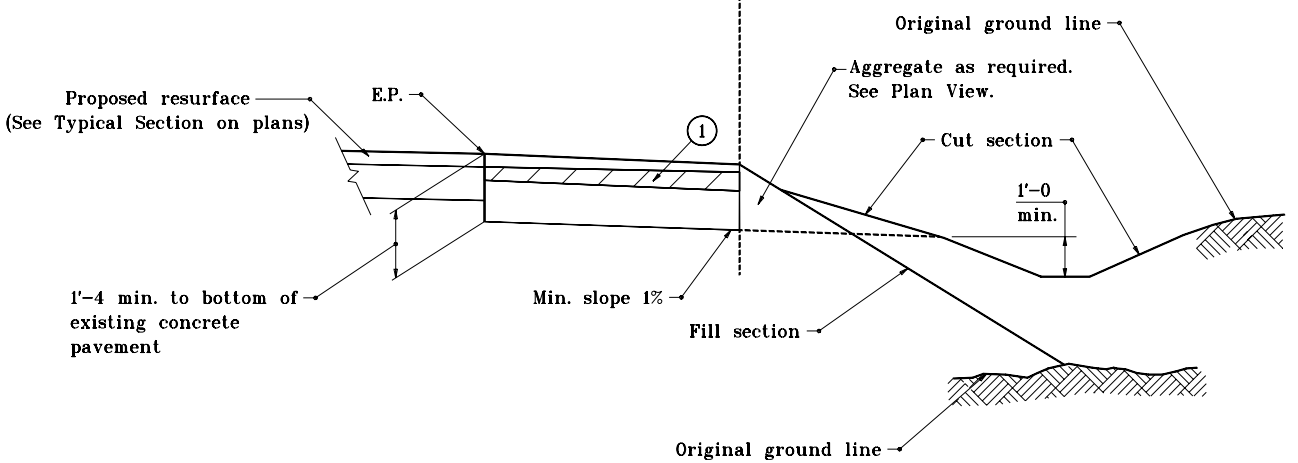

ELEVATION

SHOULDER DRAIN

INDIANA DEPARTMENT OF TRANSPORTATION

SHOULDER DRAIN

MAY 1998

STANDARD DRAWING NO. **E 608-SHDR-01**

ANTHONY L. UREMOVICH REGISTERED No. 18095 STATE OF INDIANA PROFESSIONAL ENGINEER

DESIGN STANDARDS ENGINEER

DETAILS PLACED IN THIS FORMAT	11-15-99
/s/ Anthony L. Uremovich DESIGN STANDARDS ENGINEER	11-15-99 DATE
/s/ Firooz Zandi CHIEF HIGHWAY ENGINEER	11-15-99 DATE
ORIGINALLY APPROVED	5-01-98

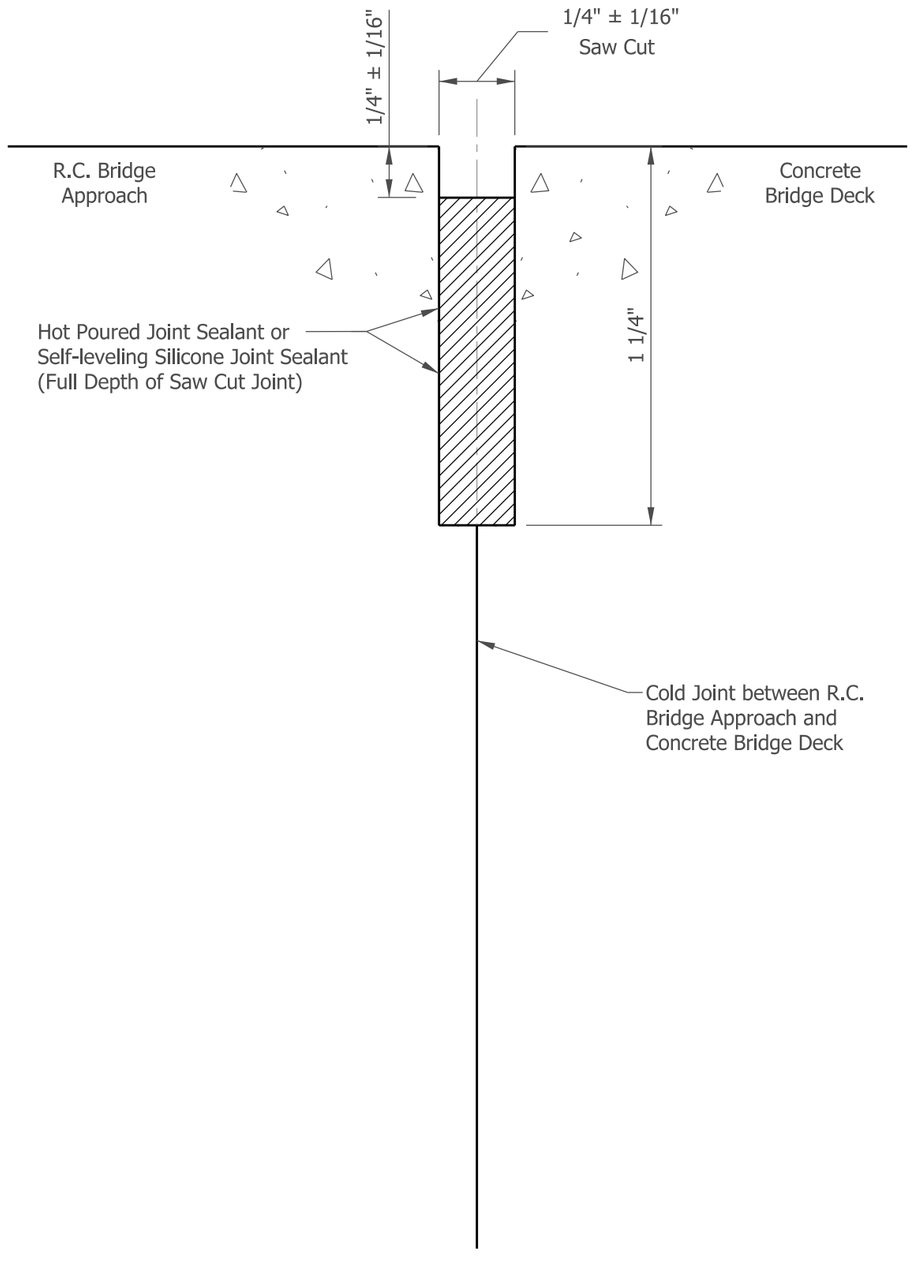

NOTES:

1. See Standard Drawing series E-609-RCBA for joint location.

INDIANA DEPARTMENT OF TRANSPORTATION

TYPE I-A JOINT

SEPTEMBER 2024

STANDARD DRAWING NO. E 609-BRJT-01

ELIZABETH P. MOUSER
REGISTERED
No.
10200124
STATE OF
INDIANA
PROFESSIONAL ENGINEER

04/09/2024
DESIGN STANDARDS ENGINEER DATE

04/16/2024
CHIEF ENGINEER DATE

INDEX	
SHEET NO.	SUBJECT
1	Reinforced Concrete Bridge Approach Index and General Notes
2	Reinforced Concrete Bridge Approach Square
3	Reinforced Concrete Bridge Approach Skewed
4	Reinforced Concrete Bridge Approach Section, Pavement Ledge, and Bar Bending Details

GENERAL NOTES:

1. All reinforcing bars shall be epoxy coated.
2. See Standard Drawing series E 609-TBAE for RCBA extensions used with bridge railing transitions.

INDIANA DEPARTMENT OF TRANSPORTATION

REINFORCED CONCRETE BRIDGE APPROACH
INDEX AND GENERAL NOTES

SEPTEMBER 2021

STANDARD DRAWING NO. E 609-RCBA-01

3/24/21
DESIGN STANDARDS ENGINEER DATE

3/29/2021
CHIEF ENGINEER DATE

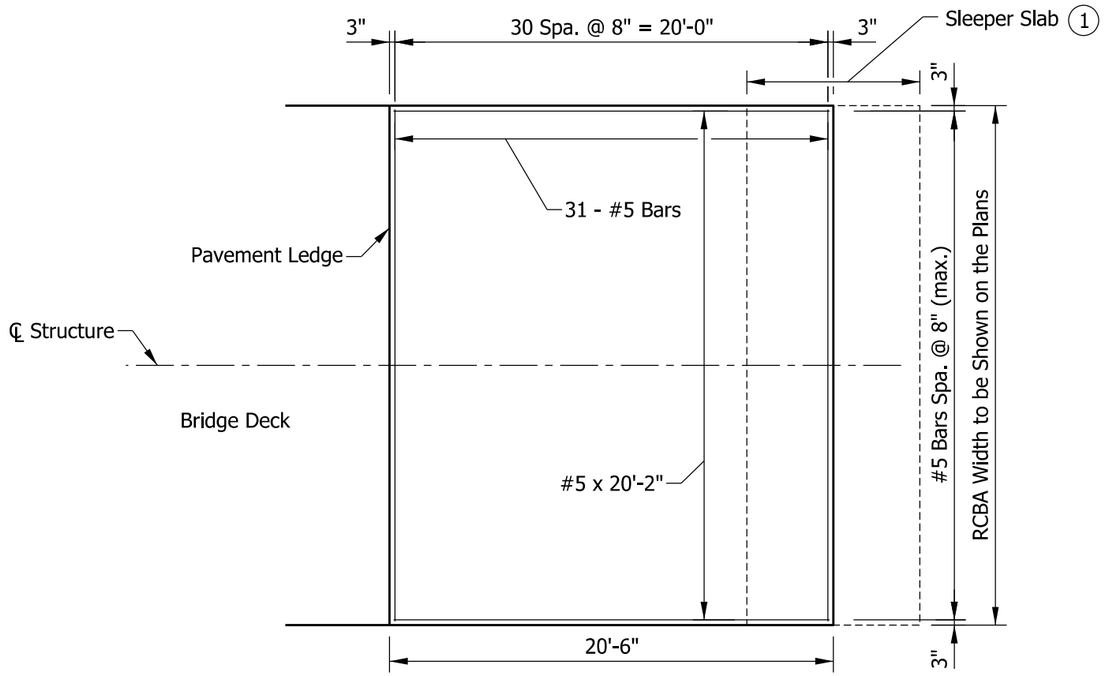

PLAN SHOWING TOP REINFORCING

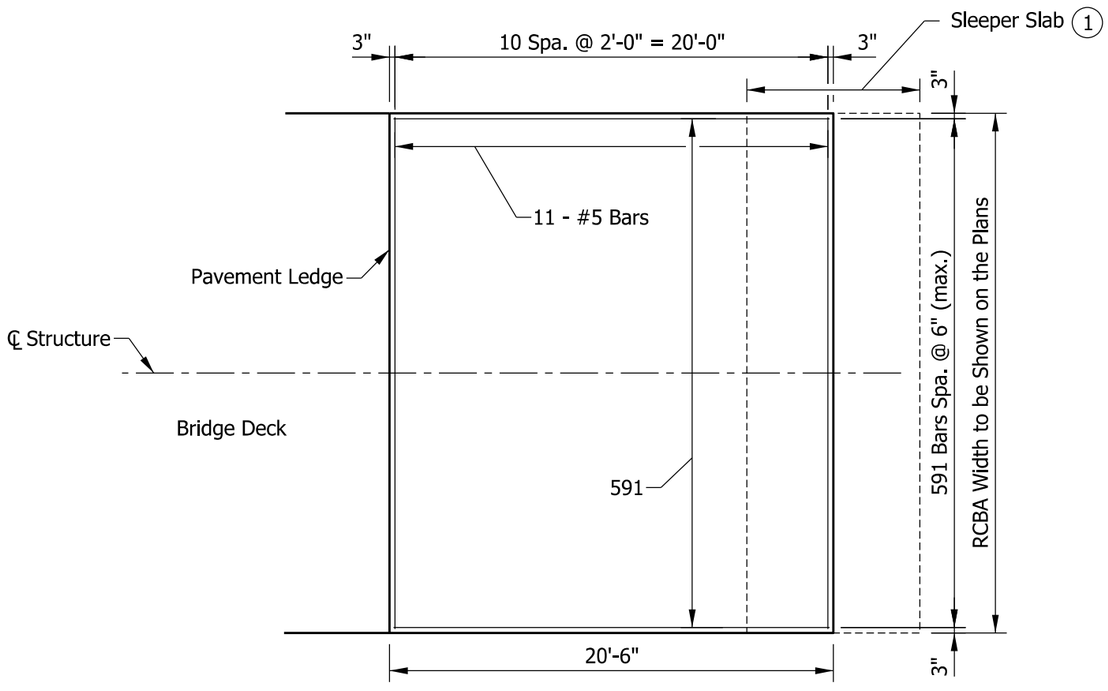

PLAN SHOWING BOTTOM REINFORCING

NOTES:

(1) When shown on the plans, see Standard Drawing series E 503-BATJ for terminal joint and sleeper slab details.

KEY:

RCBA = Reinforced Concrete Bridge Approach

INDIANA DEPARTMENT OF TRANSPORTATION

REINFORCED CONCRETE BRIDGE APPROACH SQUARE

SEPTEMBER 2020

STANDARD DRAWING NO. E 609-RCBA-02

ELIZABETH W. PHILLIPS
REGISTERED
No. 10200124
STATE OF INDIANA
PROFESSIONAL ENGINEER

03/10/20
DESIGN STANDARDS ENGINEER DATE

04/02/20
CHIEF ENGINEER DATE

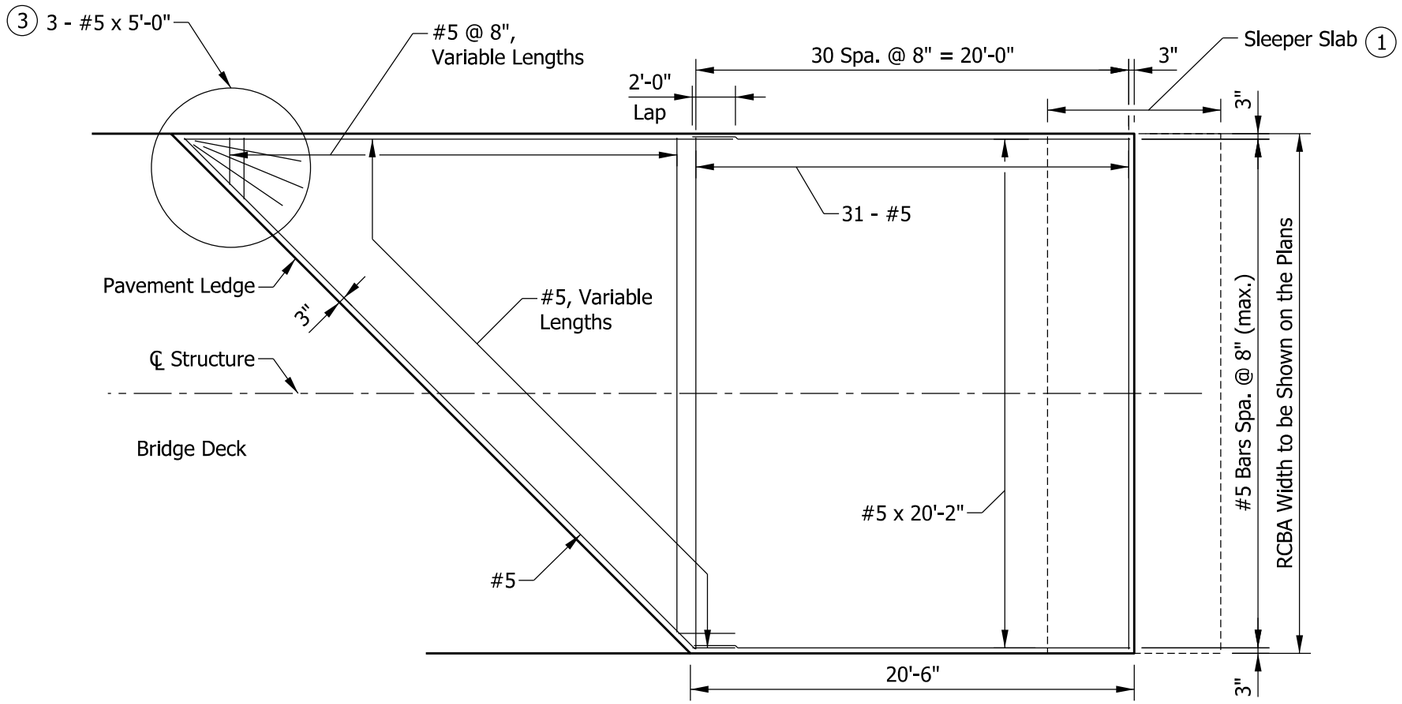

PLAN SHOWING TOP REINFORCING

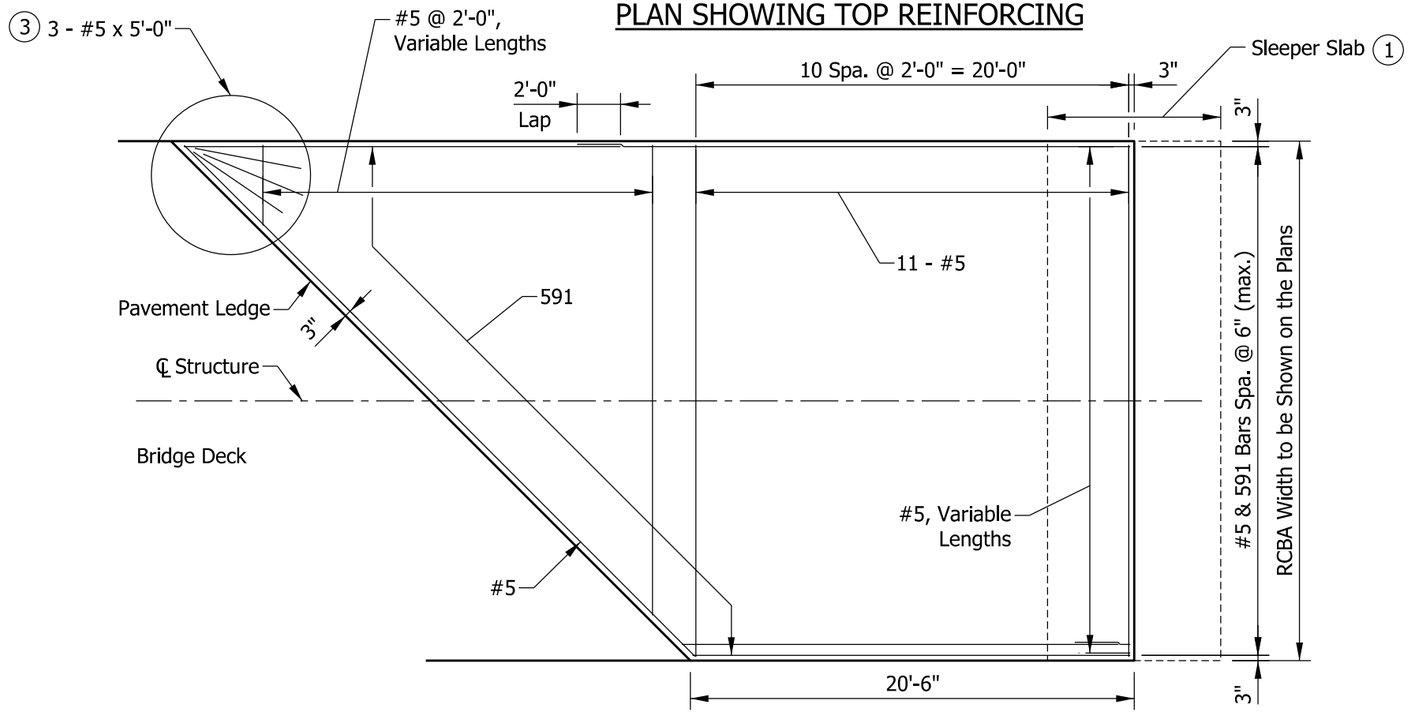

PLAN SHOWING BOTTOM REINFORCING

NOTES:

1. When shown on the plans, see Standard Drawing series E 503-BATJ for terminal joint and sleeper slab details.
2. Variable-length #5 bars shall be detailed by means of cutting diagrams on the plans.
3. For skew > 15 degrees where variable-length transverse bars would be shorter than 2 ft 0 in., a fanned configuration of three #5 x 5'-0" reinforcing bars shall be provided.

KEY:

RCBA = Reinforced Concrete Bridge Approach

INDIANA DEPARTMENT OF TRANSPORTATION

REINFORCED CONCRETE BRIDGE APPROACH SKEWED

SEPTEMBER 2020

STANDARD DRAWING NO. E 609-RCBA-03

ELIZABETH W. PHILLIPS
REGISTERED
No. 10200124
STATE OF INDIANA
PROFESSIONAL ENGINEER

03/10/20
DESIGN STANDARDS ENGINEER — DATE

04/02/20
CHIEF ENGINEER — DATE

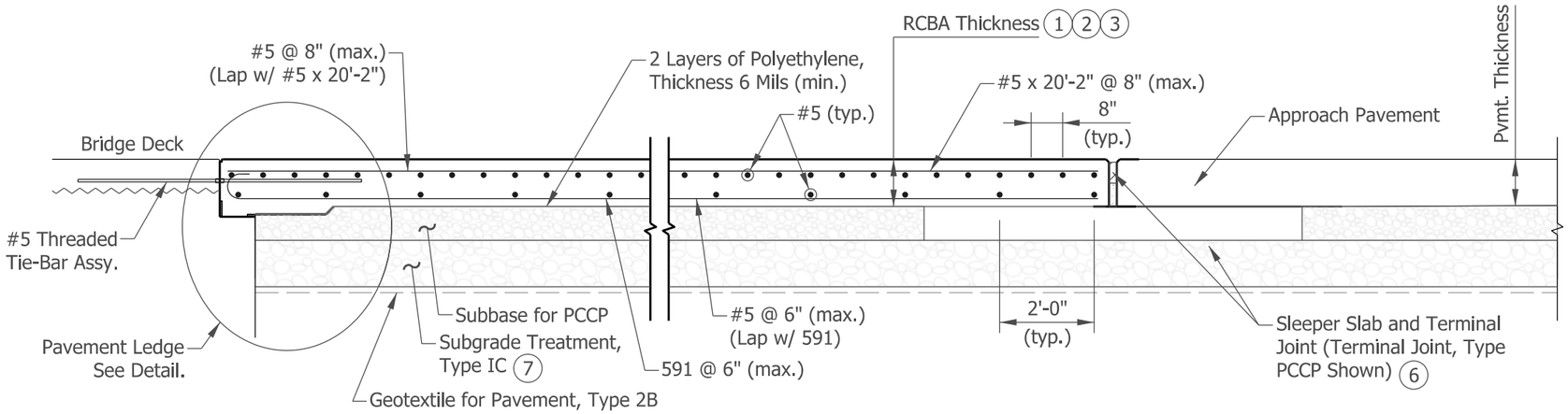

SECTION THROUGH APPROACH

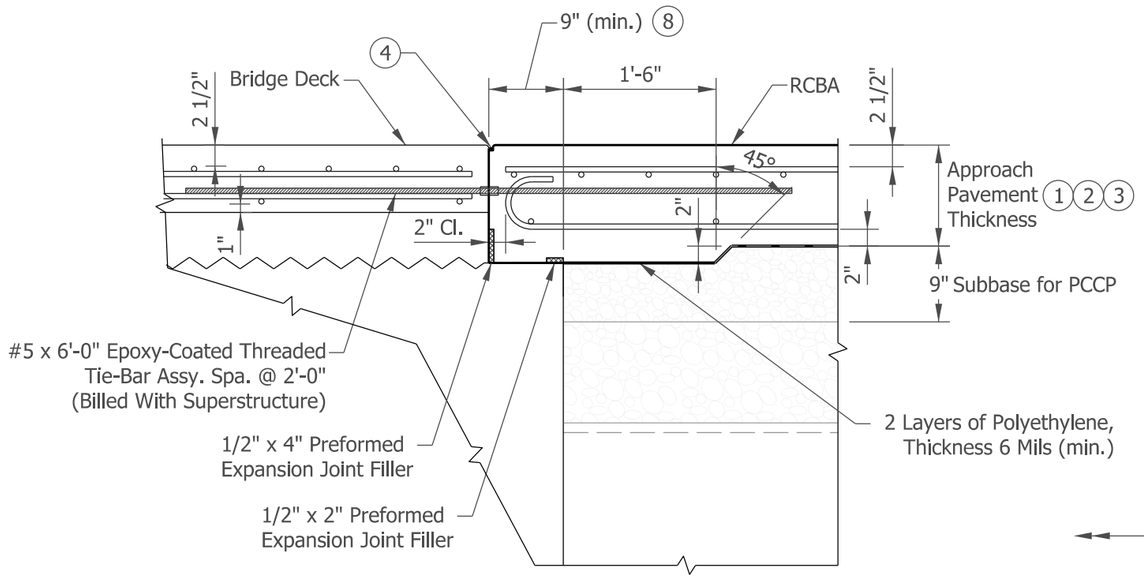

PAVEMENT LEDGE DETAIL

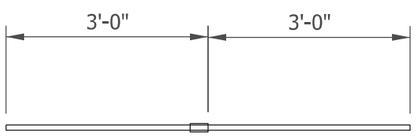

#5E x 6'-0" Epoxy-Coated
Threaded Tie-Bar Assembly

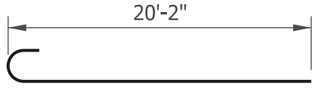

591 x 20'-9"

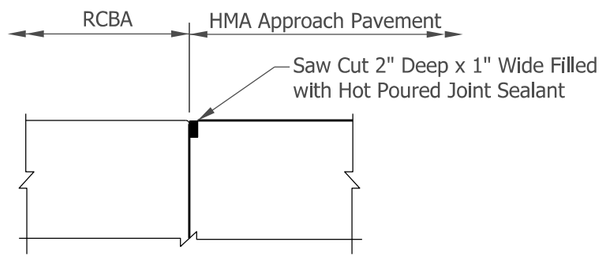

RCBA END DETAIL
(ONLY APPLICABLE AT LOCATIONS
WITHOUT TERMINAL JOINT)

NOTES:

1. See plans for approach pavement thickness.
2. For HMA approach pavement:
   RCBA = 10 in. if design year AADT < 1000
   RCBA = 12 in. if design year AADT ≥ 1000
3. For PCCP approach pavement:
   RCBA = 12 in. if pavement thickness < 12 in.
   RCBA = Same as pavement thickness, if pavement thickness ≥ 12 in.
4. See Standard Drawing series E 609-BRJT for joint type I-A details.
5. See Standard Drawing series E 703-BRST for reinforcing-bar bending details and notes.
6. When shown on the plans, see Standard Drawing series E 503-BATJ for terminal joint and sleeper slab details.
7. When the RCBA is constructed without a terminal joint, subgrade treatment shall be omitted and geotextile shall be placed under subbase for PCCP.
8. See plans for project specific pavement ledge dimensions.

INDIANA DEPARTMENT OF TRANSPORTATION

REINFORCED CONCRETE BRIDGE APPROACH SECTION, PAVEMENT LEDGE, AND BAR BENDING DETAILS

SEPTEMBER 2025

STANDARD DRAWING NO. E 609-RCBA-04

ELIZABETH P. MOUSER
REGISTERED
No. 10200124
STATE OF INDIANA
PROFESSIONAL ENGINEER

01/22/2025
DESIGN STANDARDS ENGINEER — DATE

01/31/2025
CHIEF ENGINEER — DATE

INDEX	
SHEET NO.	SUBJECT
1	RCBA Extension for Bridge Railing Transition Index and General Notes
2	RCBA Extension for Bridge Railing Transition Plan, Section A-A Details, and RCBA Extension Dimensions
3	RCBA Extension for Bridge Railing Transition Bill of Materials, Bar Bending, and Section B-B Details

GENERAL NOTES:

1. All reinforcing bars shall be epoxy coated.
2. See Standard Drawing series E 609-RCBA for reinforced concrete bridge approach slab details.

INDIANA DEPARTMENT OF TRANSPORTATION

RCBA EXTENSION FOR
BRIDGE RAILING TRANSITION
INDEX AND GENERAL NOTES

SEPTEMBER 2021

STANDARD DRAWING NO. E 609-TBAE-01

JEREMY C. HUNTER
REGISTERED
No.
PE10505669
STATE OF
INDIANA
PROFESSIONAL ENGINEER

Jeremy C Hunter 3/16/2021
DESIGN STANDARDS ENGINEER DATE

03/17/2021
CHIEF ENGINEER DATE

RCBA EXTENSION DIMENSIONS				
Transition	Length, L	Width, W	No. Top Bars, M	No. Bottom Bars, N
TFC	15'-10"	1'-6"	24	9
TFT	20'-2"	1'-6"	31	11
TPF-1	15'-10"	1'-0"	24	9
TPS-1	15'-10"	1'-0"	24	9
TTF-2	20'-2"	1'-6"	31	11
TTX	20'-6"	1'-2"	31	11

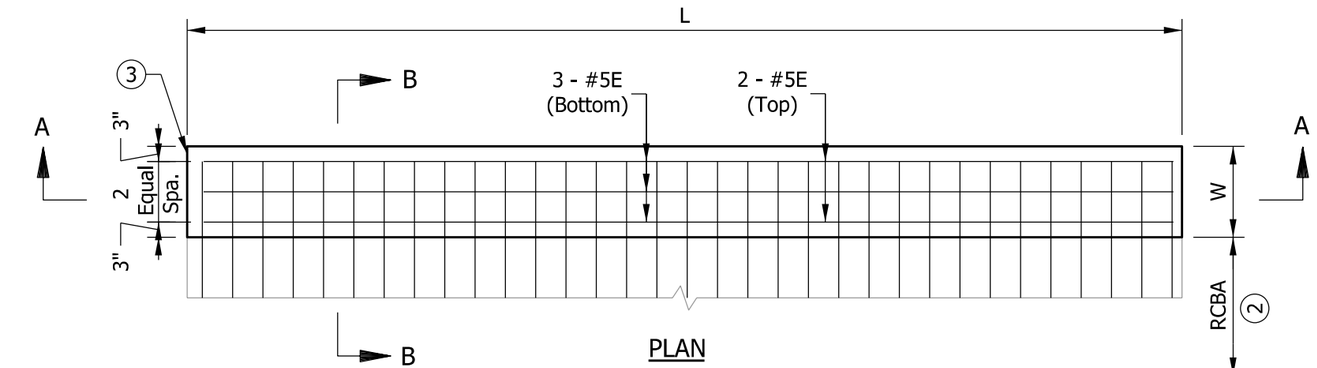

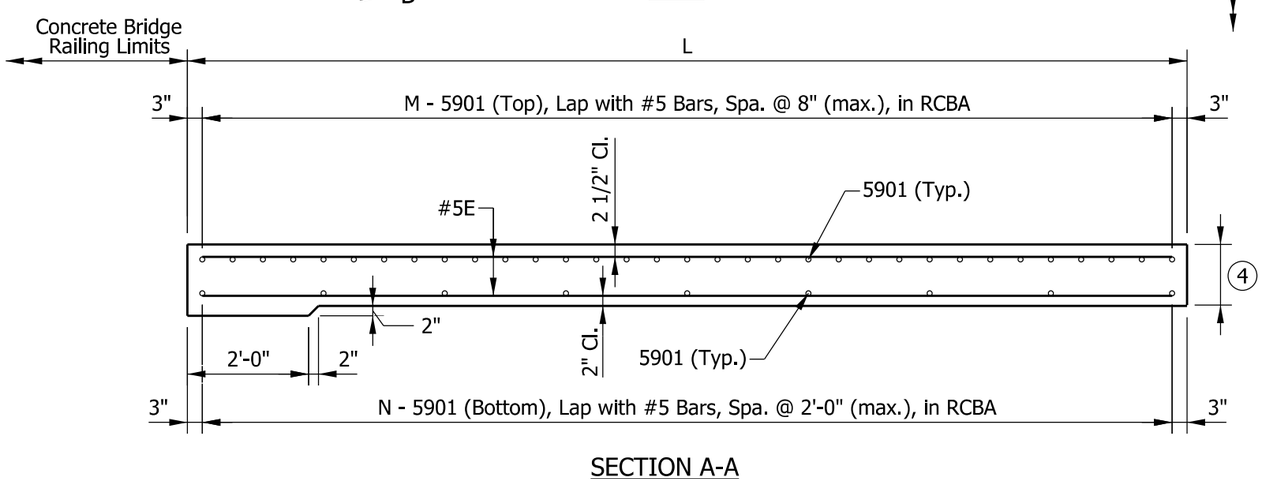

NOTES:

1. Typical concrete bridge railing transition reinforcing not shown for clarity.
2. See Standard Drawing series E 609-RCBA and the plans for reinforced concrete bridge approach details.
3. The end of the reinforced concrete bridge approach extension shall match the construction at the bridge end as shown on the plans.
4. See the plans for thickness of RCBA and its extension.

INDIANA DEPARTMENT OF TRANSPORTATION

RCBA EXTENSION FOR BRIDGE RAILING TRANSITION PLAN, SECTION A-A DETAILS, AND RCBA EXTENSION DIMENSIONS

SEPTEMBER 2021

STANDARD DRAWING NO. E 609-TBAE-02

JEREMY C. HUNTER REGISTERED No. PE10505669 STATE OF INDIANA PROFESSIONAL ENGINEER

Jeremy C Hunter 3/16/2021
DESIGN STANDARDS ENGINEER DATE

03/17/2021
CHIEF ENGINEER DATE

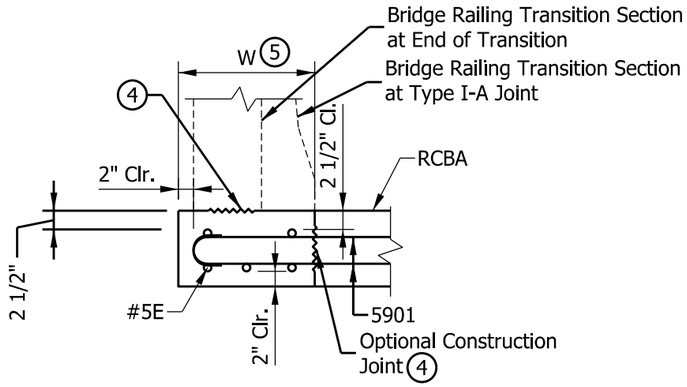

SECTION B-B

(Bridge Railing Transitions Type (2))

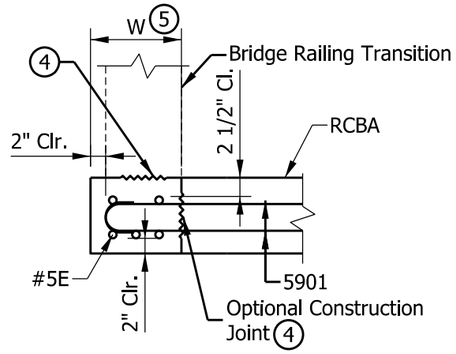

SECTION B-B

(Bridge Railing Transitions Type (3))

NOTES:

1. See Standard Drawing series E 703-BRST for reinforcing bar bending details and notes.

(2) •See Standard Drawing series E 706-TTFC for concrete bridge railing transition type TFC details.
•See Standard Drawing series E 706-TTFT for concrete bridge railing transition type TFT details.

(3) •See Standard Drawing series E 706-TTPP for concrete bridge railing transition type TPF-1 and type TPS-1 details.
•See Standard Drawing series E 706-TTTF for concrete bridge railing transition type TTF-2 details.
•See Standard Drawing series E 706-TTTX for concrete bridge railing transition type TTX details.

(4) Construction joint type A. See Standard Drawing series E 702-CJTA for details.

(5) See RCBA Extension Dimensions Table for width.

BILL OF MATERIALS FOR TYPE TPS-1			
Quantities are for one RCBA extension			
EPOXY COATED REINFORCING BARS			
MARK OR SIZE	NO. OF BARS	LENGTH	WEIGHT
5901	33	4'-4"	149
#5	5	15'-6"	81
Total Epoxy Coated Reinforcing Bars			230 LBS
MISCELLANEOUS			
RCBA Extension Area			1.8 SYS

BILL OF MATERIALS FOR TYPE TFC			
Quantities are for one RCBA extension			
EPOXY COATED REINFORCING BARS			
MARK OR SIZE	NO. OF BARS	LENGTH	WEIGHT
5901	33	4'-4"	149
#5	5	15'-6"	81
Total Epoxy Coated Reinforcing Bars			230 LBS
MISCELLANEOUS			
RCBA Extension Area			2.6 SYS

BILL OF MATERIALS FOR TYPE TPF-1			
Quantities are for one RCBA extension			
EPOXY COATED REINFORCING BARS			
MARK OR SIZE	NO. OF BARS	LENGTH	WEIGHT
5901	33	4'-4"	149
#5	5	15'-6"	81
Total Epoxy Coated Reinforcing Bars			230 LBS
MISCELLANEOUS			
RCBA Extension Area			1.8 SYS

BILL OF MATERIALS FOR TYPE TTF-2			
Quantities are for one RCBA extension			
EPOXY COATED REINFORCING BARS			
MARK OR SIZE	NO. OF BARS	LENGTH	WEIGHT
5901	42	4'-4"	190
#5	5	19'-10"	103
Total Epoxy Coated Reinforcing Bars			293 LBS
MISCELLANEOUS			
RCBA Extension Area			3.4 SYS

BILL OF MATERIALS FOR TYPE TFT			
Quantities are for one RCBA extension			
EPOXY COATED REINFORCING BARS			
MARK OR SIZE	NO. OF BARS	LENGTH	WEIGHT
5901	42	4'-4"	190
#5	5	19'-10"	103
Total Epoxy Coated Reinforcing Bars			293 LBS
MISCELLANEOUS			
RCBA Extension Area			3.4 SYS

BILL OF MATERIALS FOR TYPE TTX			
Quantities are for one RCBA extension			
EPOXY COATED REINFORCING BARS			
MARK OR SIZE	NO. OF BARS	LENGTH	WEIGHT
5901	42	4'-4"	190
#5	5	20'-2"	105
Total Epoxy Coated Reinforcing Bars			295 LBS
MISCELLANEOUS			
RCBA Extension Area			2.7 SYS

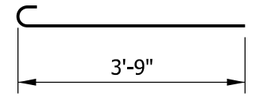

5901 x 4'-4"

INDIANA DEPARTMENT OF TRANSPORTATION

RCBA EXTENSION FOR BRIDGE RAILING TRANSITION BILL OF MATERIALS, BAR BENDING, AND SECTION B-B DETAILS

SEPTEMBER 2021

STANDARD DRAWING NO. E 609-TBAE-03

JEREMY C. HUNTER REGISTERED No. PE10505669 STATE OF INDIANA PROFESSIONAL ENGINEER

Jeremy C Hunter 3/16/2021
DESIGN STANDARDS ENGINEER DATE

03/17/2021
CHIEF ENGINEER DATE

INDEX	
SHEET NO.	SUBJECT
1	Drives Index and General Notes
2	Class I Drive (Residential)
3	Class II Drive (Residential)
4	Class III Drive (Commercial)
5	Class IV Drive (Commercial)
6	Class V Drive (Field Entrance)
7	Class VI Drive (Industrial)
8	Class VII Drive (Industrial)
9	Class I and Class III Drives Approach Grades
10	Class II and Class IV Drives Sections
11	Class II, IV & V Drives Approach Grades
12	Class VI Drive Approach Grades
13	Class VII Drive Approach Grades
14	Joint Placement, Corner Reinforcing, Monolithic Curb, and Concrete Curb and Gutter Details
15	Private Drive Crossover Plans
16	Private and Commercial Drive Crossover Sections
17	Commercial Drive Crossover Plans
18	Pavement Wedge and Pay Limits for Class II, IV and VII Drives

GENERAL NOTES:

1. When the maximum approach grade of ±10% does not meet the grade of the existing drive before the R/W line, the approach grade of ±10% shall extend beyond the R/W to the point of intersection with the existing driveway grade. Construction beyond the R/W line shall be done in temporary R/W.

2. The appropriate pipe end treatment should be provided for pipes located either inside the clear zone or outside the clear zone.

3. The minimum driveway pavement sections for Class III, IV, VI and VII Drives have been designed for an average annual daily truck traffic (AADTT) 400, Truck Class 4 and above. If the AADTT is greater than 400 per day, the required pavement section shall be as shown elsewhere on the plans.

4. For Class III, IV, VI and VII Drives, if length of the driveway is more than 15 feet, then D-1 contraction joints are required in transverse direction. Spacing shall be 1/2 the length of the driveway or 15 feet maximum.

5. Embankment slopes within the mainline clear zone for new construction/reconstruction projects or within the obstruction-free zone for 3R projects should be as shown in the table on Standard Drawing E 610-PRAP-01. Outside the clear zone or the obstruction-free zone, the embankment slopes should desirably be 4:1 but not steeper than 3:1.

INDIANA DEPARTMENT OF TRANSPORTATION

DRIVES
INDEX AND GENERAL NOTES

SEPTEMBER 2026

STANDARD DRAWING NO. E 610-DRIV-01

ELIZABETH P. MOUSER
REGISTERED
No.
10200124
STATE OF
INDIANA
PROFESSIONAL ENGINEER

03/02/2026
DESIGN STANDARDS ENGINEER DATE

04/08/2026
CHIEF ENGINEER DATE

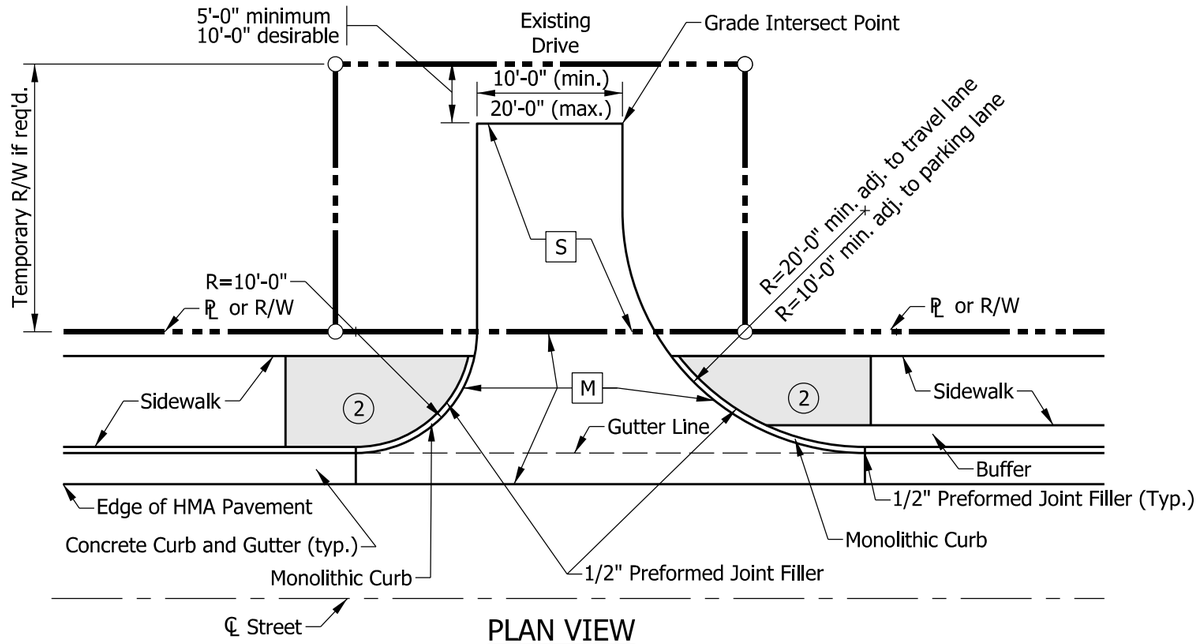

PLAN VIEW
CONCRETE CURB AND GUTTER

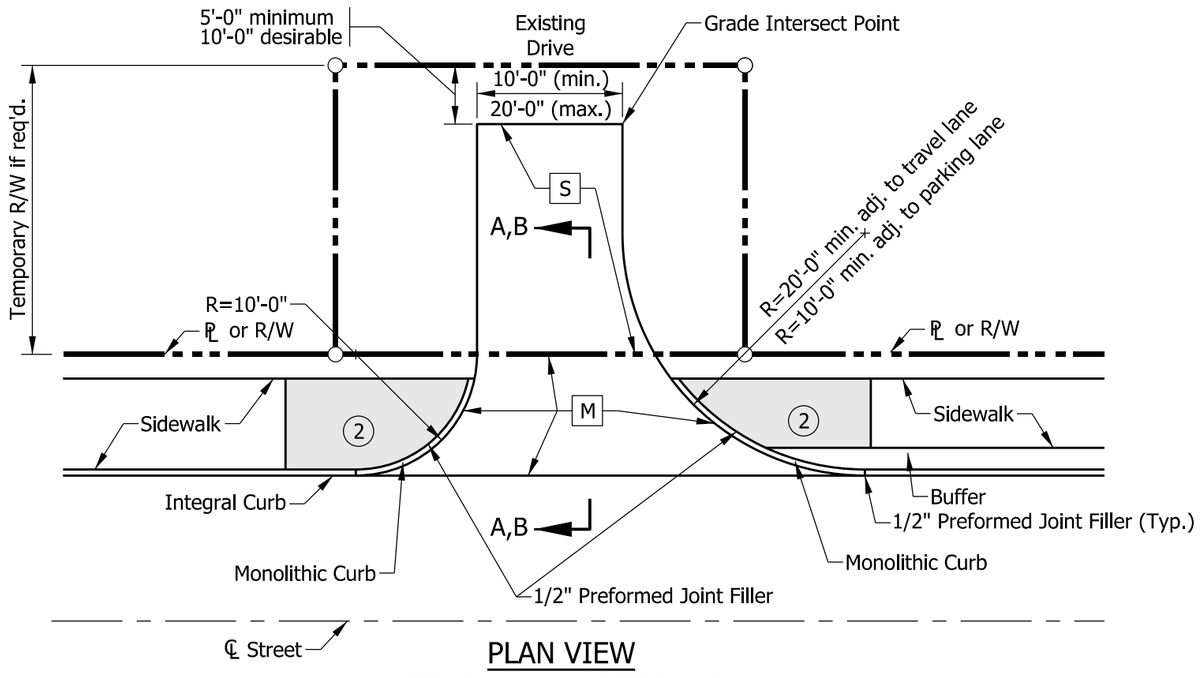

PLAN VIEW
INTEGRAL CONCRETE CURB

NOTES:

1. See Standard Drawing series E 610-DRIV-14 for joint placement, corner reinforcing, monolithic curb, and concrete curb and gutter details.

(2) See Standard Drawing E 604-SDWK-03 sidewalk driveway crossing details.

3. See Standard Drawing E 610-DRIV-09 for Sections A-A and B-B.

LEGEND

M PCCP for Approaches, 6 in., on
Dense Graded Subbase, 6 in., on
Subgrade Treatment Type II (6 in. Coarse Aggregate No. 53)

S For type and thickness equivalent to surface in place, see plans.

Sidewalk Elevation Transition

INDIANA DEPARTMENT OF TRANSPORTATION

CLASS I DRIVE
(RESIDENTIAL)

SEPTEMBER 2026

STANDARD DRAWING NO. E 610-DRIV-02

ELIZABETH P. MOUSER
REGISTERED
No. 10200124
STATE OF INDIANA
PROFESSIONAL ENGINEER

03/02/2026
DESIGN STANDARDS ENGINEER DATE

04/08/2026
CHIEF ENGINEER DATE

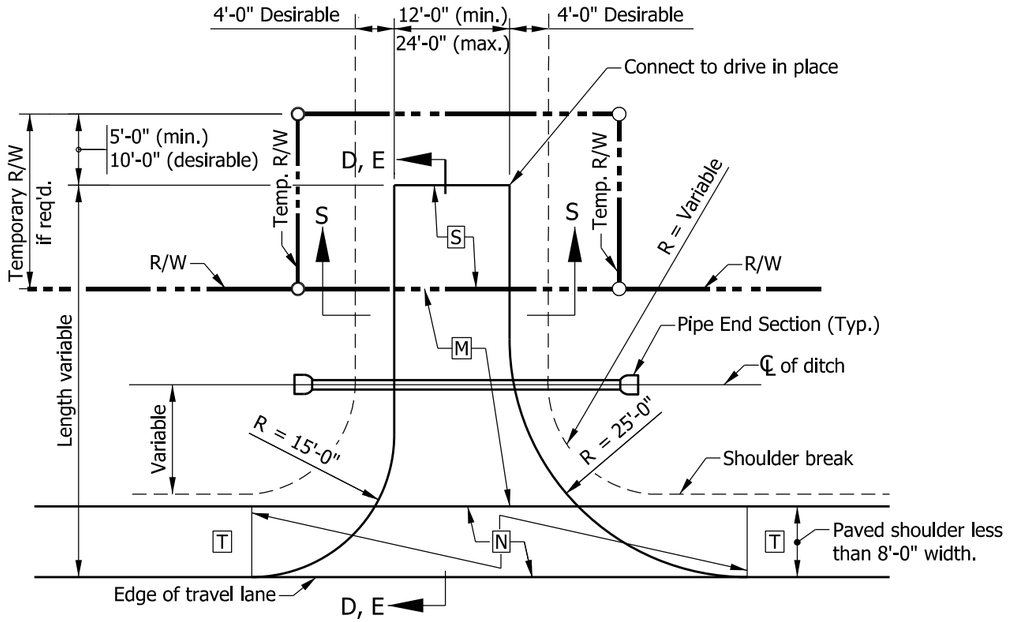

PLAN VIEW

(PAVED SHOULDER LESS THAN 8'-0" IN WIDTH OR UNPAVED SHOULDER)

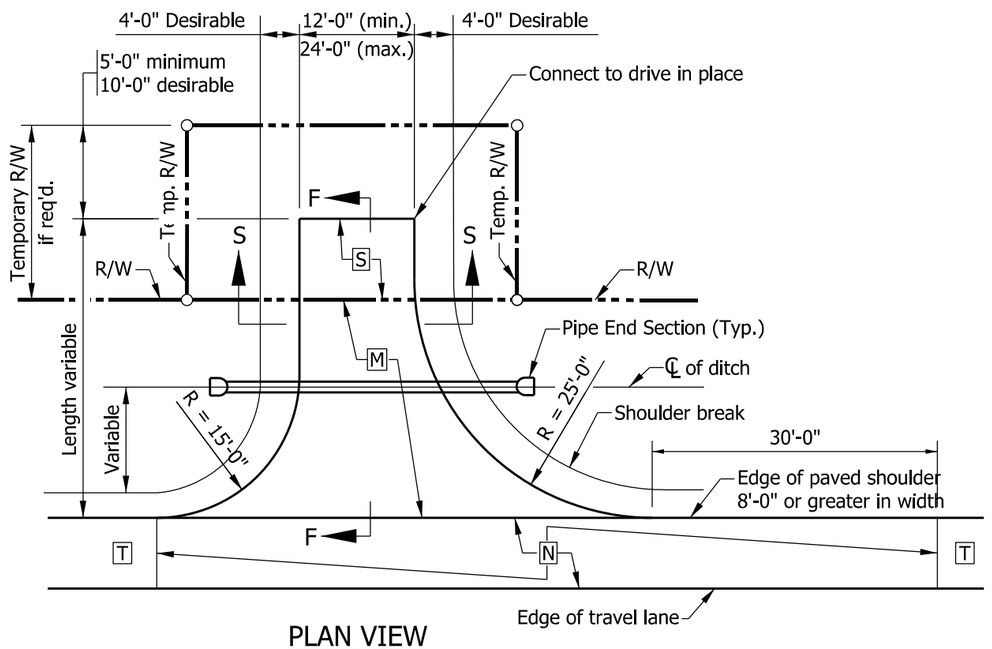

PLAN VIEW

(PAVED SHOULDER 8'-0" OR GREATER IN WIDTH)

NOTES:

1. See Standard Drawing E 610-DRIV-10 for Section S-S.
2. See Standard Drawing E 610-DRIV-11 for Sections D-D, E-E, and F-F for approach grades.
3. The radii for PCCP Class II drives shall be constructed using corner reinforcement as detailed in Standard Drawing E 610-DRIV-14.
4. For PCCP Drives see Standard Drawing E 610-DRIV-14 for joint placement details.

LEGEND

[M] HMA for Approaches, Type B, consisting of:
165 lbs/syd HMA Surface, Type B, on
275 lbs/syd HMA Intermediate, Type B, on
6 in. Compacted Aggregate No. 53, on
Subgrade Treatment Type II (6 in. Coarse Aggregate No. 53)
or
PCCP for Approaches, 6 in., on
Dense Graded Subbase, 6 in., on
Subgrade Treatment Type II (6 in. Coarse Aggregate No. 53)

[N] The greater thickness of either the drive [M] or the paved shoulder [T] section.

[S] For type and thickness equivalent to surface in place, see plans.

[T] Plan shoulder section.

INDIANA DEPARTMENT OF TRANSPORTATION

CLASS II DRIVE
(RESIDENTIAL)

SEPTEMBER 2026

STANDARD DRAWING NO. E 610-DRIV-03

ELIZABETH P. MOUSER
REGISTERED
No. 10200124
STATE OF INDIANA
PROFESSIONAL ENGINEER

03/02/2026
DESIGN STANDARDS ENGINEER DATE

04/08/2026
CHIEF ENGINEER DATE

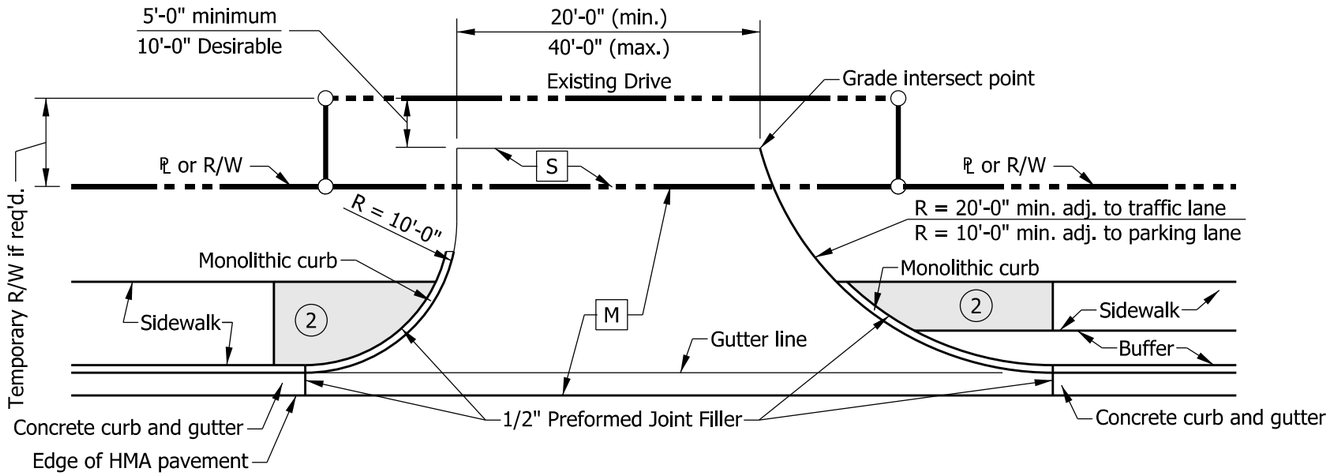

PLAN VIEW
CONCRETE CURB AND GUTTER

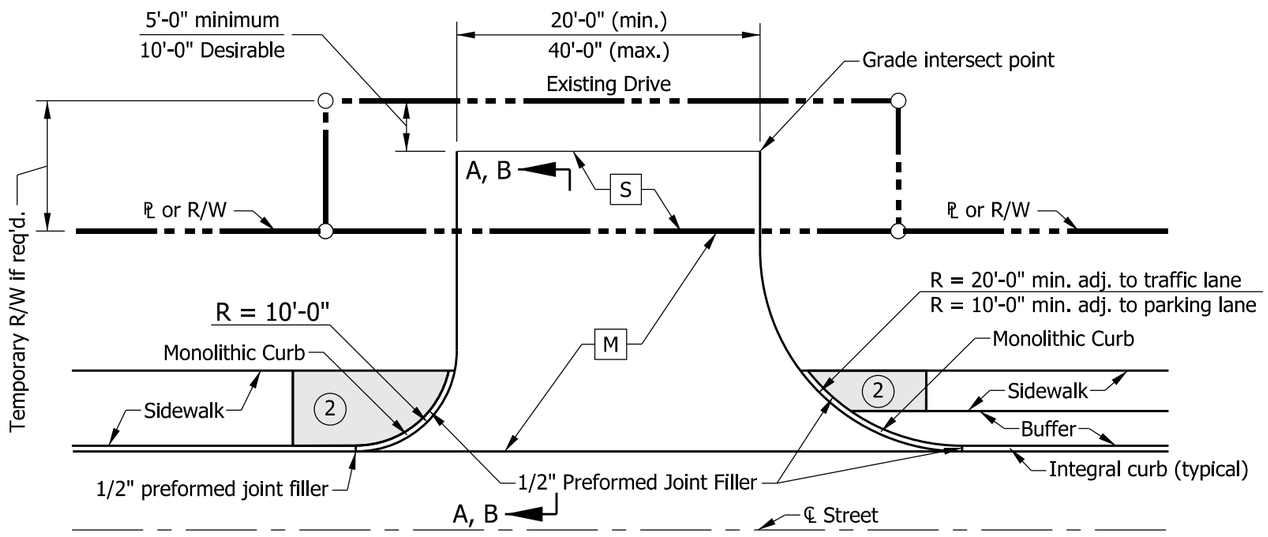

PLAN VIEW
INTEGRAL CONCRETE CURB

NOTES:

1. See Standard Drawing E 610-DRIV-09 for Section A-A, and Section B-B.
2. See Standard Drawing E 604-SDWK-03 for sidewalk driveway crossing details.
3. See Standard Drawing E 610-DRIV-14 for joint placement, monolithic curb, and concrete curb and gutter details.

LEGEND

AADTT ≤ 400

M PCCP for Approaches, 9 in., on
Dense Graded Subbase, 6 in., on
Geogrid Type IB on
Subgrade Treatment Type II (6 in. Coarse Aggregate No. 53)

S For type and thickness equivalent to surface in place, see plans.

Sidewalk elevation transitions.

INDIANA DEPARTMENT OF TRANSPORTATION

CLASS III DRIVE
(COMMERCIAL)

SEPTEMBER 2026

STANDARD DRAWING NO. E 610-DRIV-04

ELIZABETH P. MOUSER
REGISTERED
No. 10200124
STATE OF INDIANA
PROFESSIONAL ENGINEER

DESIGN STANDARDS ENGINEER — DATE 03/02/2026

CHIEF ENGINEER — DATE 04/08/2026

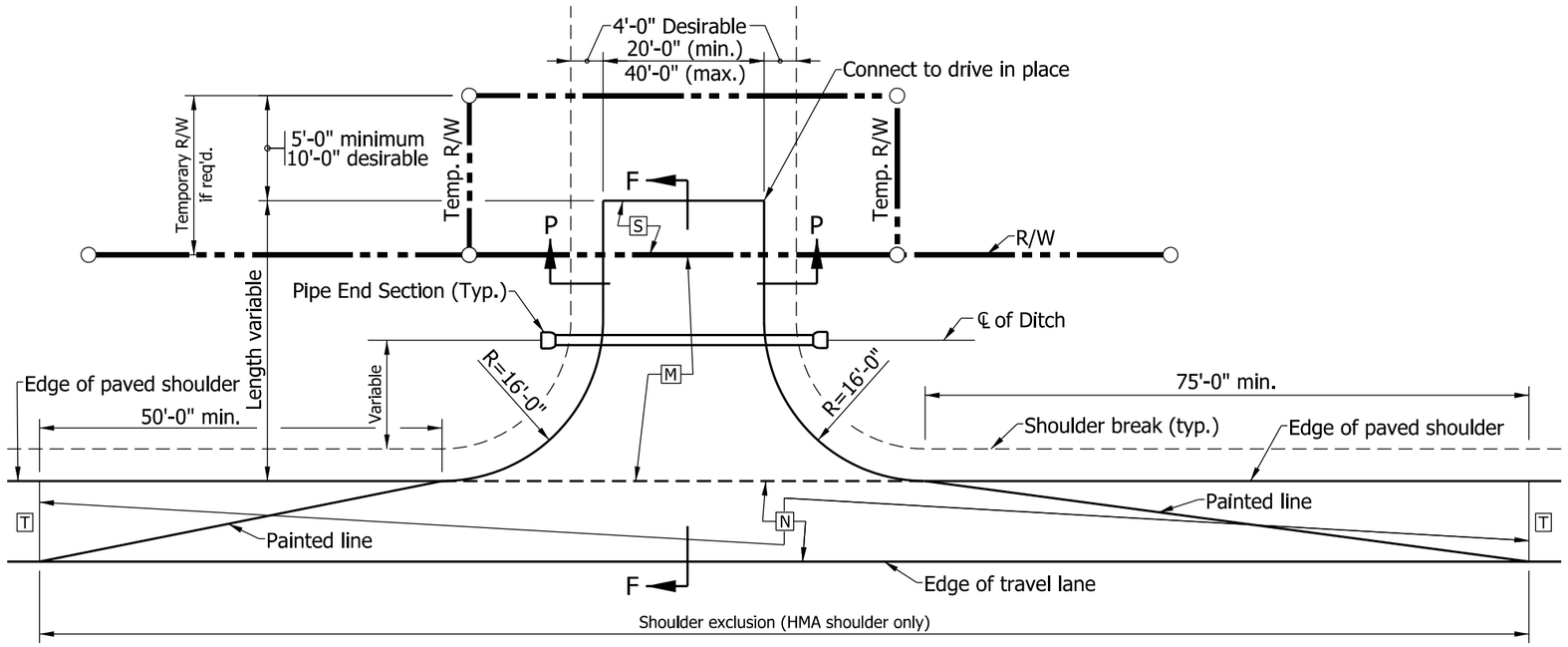

PLAN VIEW

(PAVED SHOULDER 8'-0" FEET OR GREATER IN WIDTH)

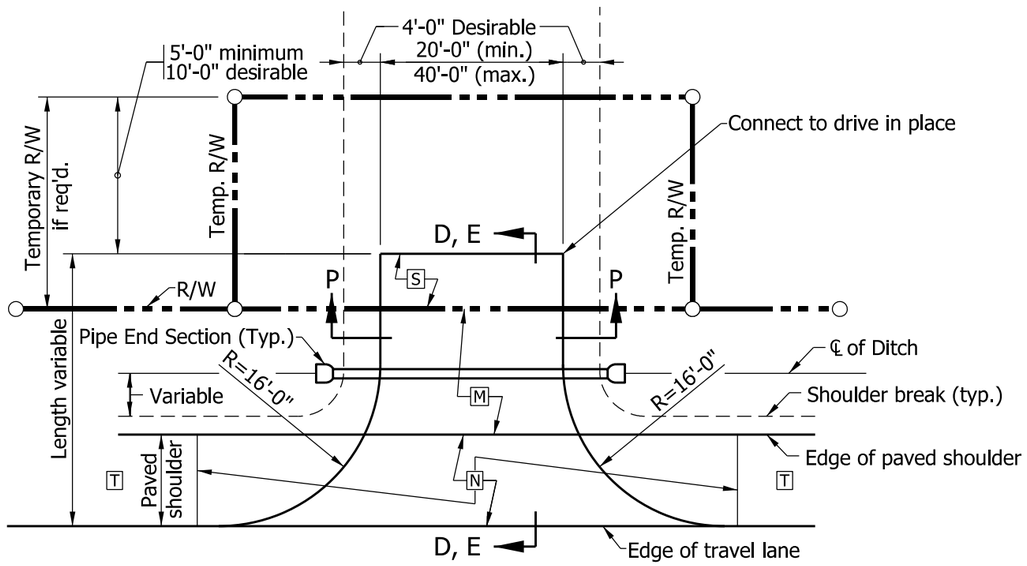

PLAN VIEW

(PAVED SHOULDER LESS THAN 8'-0" IN WIDTH OR UNPAVED SHOULDER)

NOTES:

1. See Standard Drawing E 610-DRIV-11 for Sections D-D, E-E and F-F.
2. See Standard Drawing E 610-DRIV-10 for Section P-P.
3. For PCCP Drives, see Standard Drawing E 610-DRIV-14 for joint placement details.

LEGEND

AADTT ≤ 400

[M] HMA for Approaches, Type B, consisting of:
165 lbs/syd HMA Surface, Type B, on
275 lbs/syd HMA Intermediate, Type B, on
660 lbs/syd HMA Base, Type B, on
Subgrade Treatment Type II (6 in. Coarse Aggregate No. 53), on
Geogrid, Type IB
or
PCCP for Approaches, 9 in., on
Dense Graded Subbase, 6 in., on
Geogrid Type IB on
Subgrade Treatment Type II (6 in. Coarse Aggregate No. 53)

[N] The greater thickness of either the drive [M] or the paved shoulder [T] section.

[S] For type and thickness equivalent to surface in place, see plans.

[T] Plan shoulder section.

INDIANA DEPARTMENT OF TRANSPORTATION

CLASS IV DRIVE (COMMERCIAL)

SEPTEMBER 2026

STANDARD DRAWING NO. E 610-DRIV-05

ELIZABETH P. MOUSER
REGISTERED
No. 10200124
STATE OF INDIANA
PROFESSIONAL ENGINEER

03/02/2026
DESIGN STANDARDS ENGINEER — DATE

04/08/2026
CHIEF ENGINEER — DATE

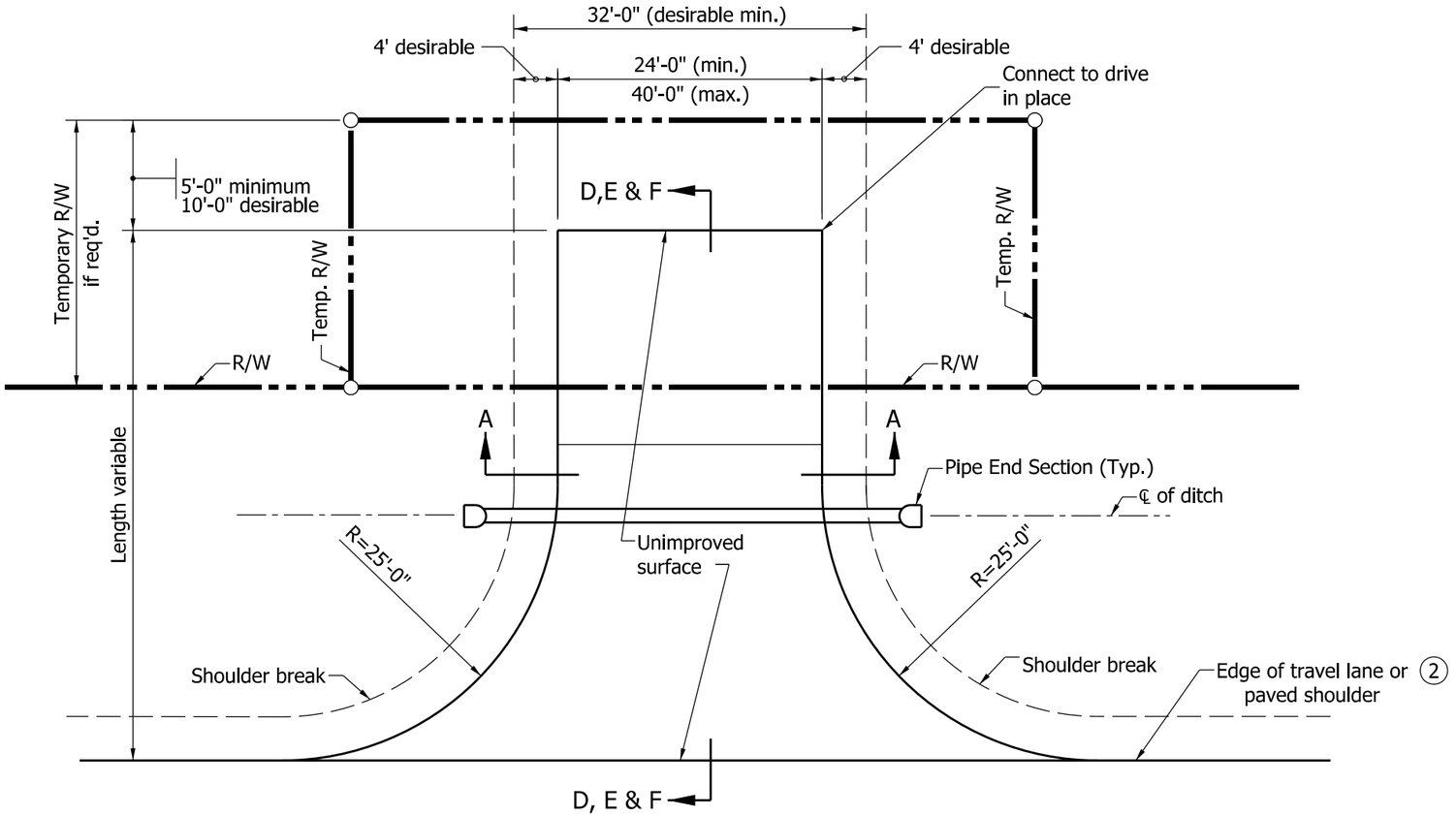

PLAN VIEW

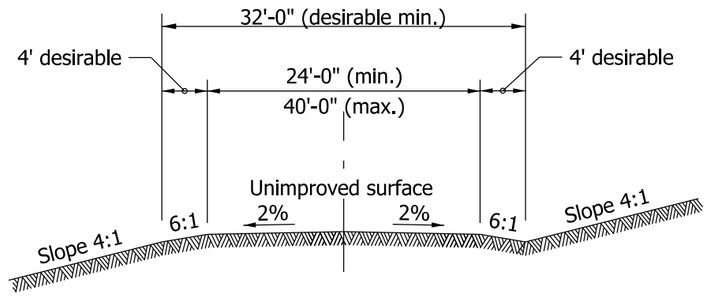

SECTION A-A

NOTES:

1. See Standard Drawing E 610-DRIV-11 for Sections D-D, E-E and F-F.

(2) Where the shoulder is earth or aggregate or the paved width is less than 8 ft, the drive radii shall be tangent to the edge of the travel lane. Where the paved shoulder width is 8 ft or more, the drive radii shall be tangent to the edge of the paved shoulder.

INDIANA DEPARTMENT OF TRANSPORTATION

CLASS V DRIVE
(FIELD ENTRANCE)

SEPTEMBER 2026

STANDARD DRAWING NO. E 610-DRIV-06

ELIZABETH P. MOUSER
REGISTERED
No. 10200124
STATE OF INDIANA
PROFESSIONAL ENGINEER

03/02/2026
DESIGN STANDARDS ENGINEER — DATE

04/08/2026
CHIEF ENGINEER — DATE

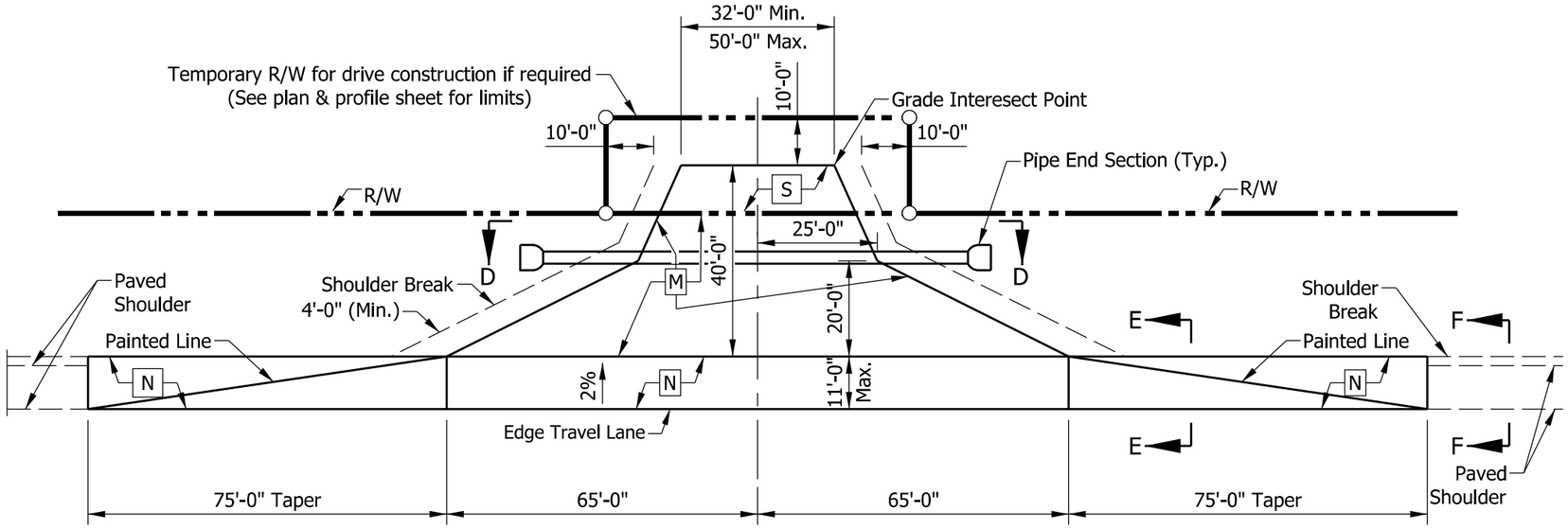

PLAN VIEW

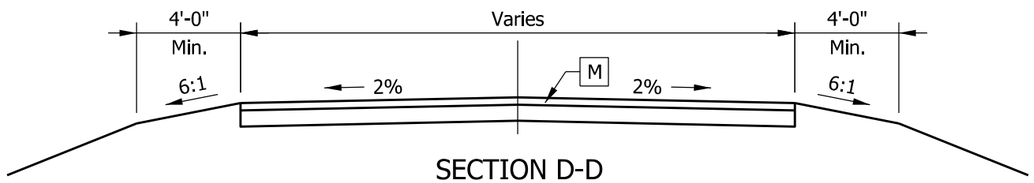

SECTION D-D

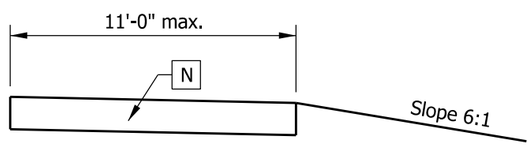

SECTION E-E

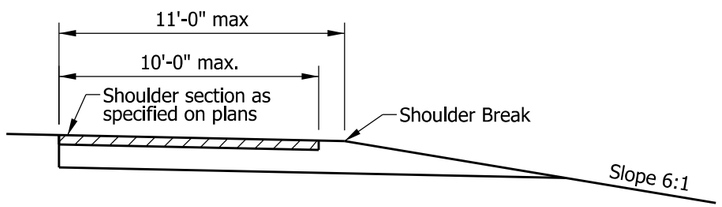

SECTION F-F

NOTES:

1. See Standard Drawing E 610-DRIV-12 for drive approach grades.
2. Class VI Drive accommodates a WB-67 (IDV) design vehicle with a 45 ft turning radius.
3. For PCCP Drives, see Standard Drawing E 610-DRIV-14 for joint placement details.

LEGEND

AADTT ≤ 400

[M] HMA for Approaches, Type B, consisting of;
165 lbs/syd HMA Surface, Type B, on
275 lbs/syd HMA Intermediate, Type B, on
660 lbs/syd HMA Base, Type B, on
Subgrade Treatment Type II (6 in. Coarse Aggregate No. 53), on
Geogrid, Type IB
or
PCCP for Approaches, 9 in., on
Dense Graded Subbase, 6 in., on
Geogrid Type IB on
Subgrade Treatment Type II (6 in. Coarse Aggregate No. 53)

[N] The greater thickness of either the drive [M] or the paved shoulder section.

[S] For type and thickness equivalent to surface in place, see plans.

INDIANA DEPARTMENT OF TRANSPORTATION

CLASS VI DRIVE (INDUSTRIAL)

SEPTEMBER 2026

STANDARD DRAWING NO. E 610-DRIV-07

ELIZABETH P. MOUSER
REGISTERED
No. 10200124
STATE OF INDIANA
PROFESSIONAL ENGINEER

DESIGN STANDARDS ENGINEER — DATE 03/02/2026

CHIEF ENGINEER — DATE 04/08/2026

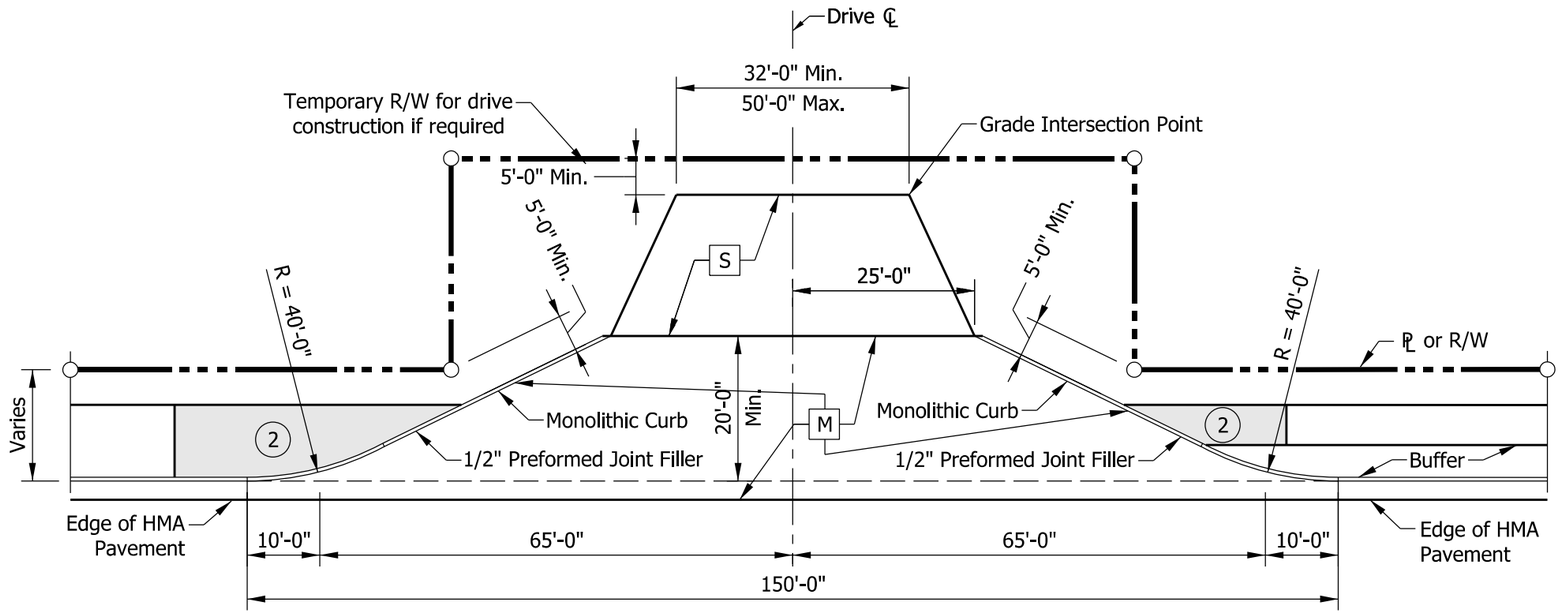

PLAN VIEW
CONCRETE CURB & GUTTER

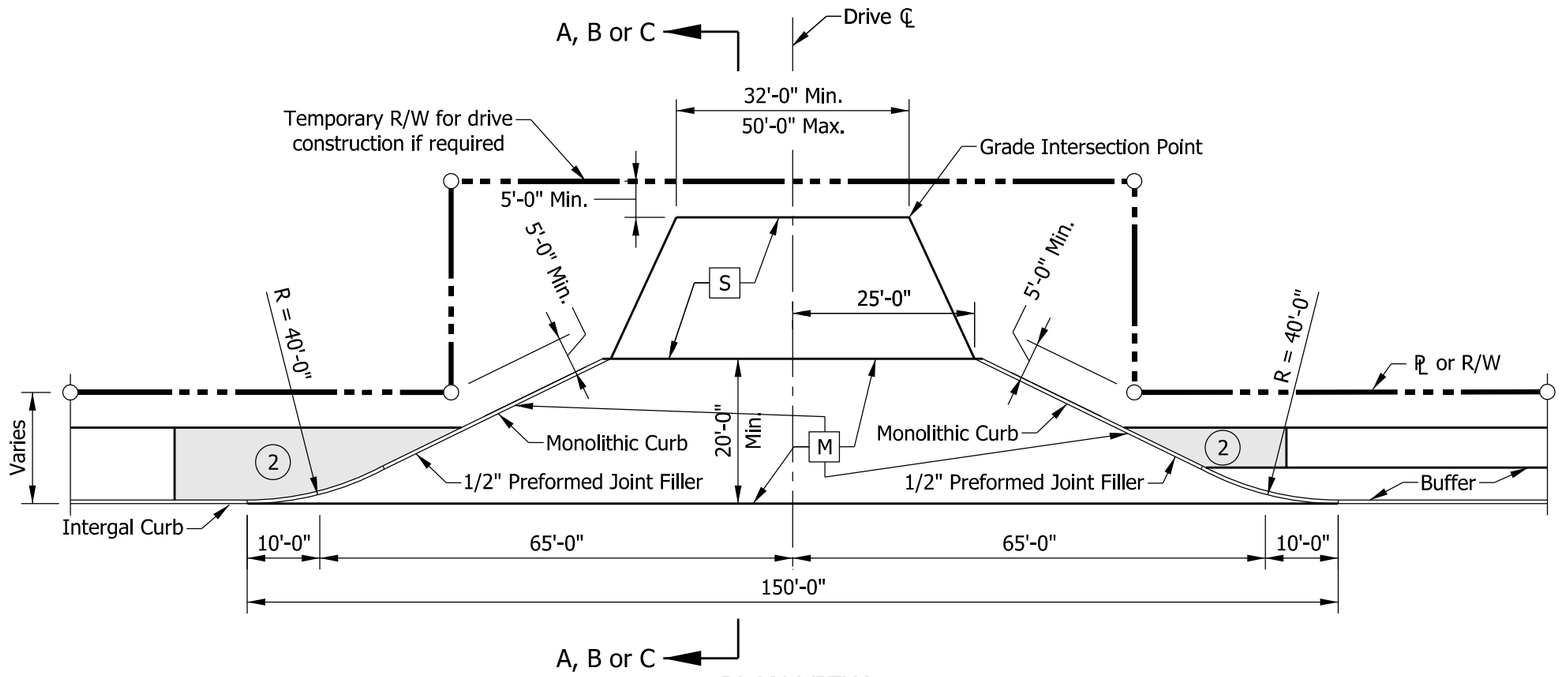

PLAN VIEW
INTEGRAL CONCRETE CURB

NOTES:

1. See Standard Drawing E 610-DRIV-12 for Sections A-A, B-B and C-C.
2. See Standard Drawing E 604-SDWK-03 sidewalk driveway crossing details.
3. See Standard Drawing E 610-DRIV-14 for joint placement, monolithic curb, and concrete curb and gutter details.

LEGEND

AADTT ≤ 400

M HMA for Approaches, Type B, consisting of:
165 lbs/syd HMA Surface, Type B, on
275 lbs/syd HMA Intermediate, Type B, on
660 lbs/syd HMA Base, Type B, on
Subgrade Treatment Type II (6 in. Coarse Aggregate No.53) on
Geogrid, Type IB
or
PCCP for Approaches, 9 in., on
Dense Graded Subbase, 6 in., on
Geogrid, Type IB on
Subgrade Treatment Type II (6 in. Coarse Aggregate No. 53)

S For type and thickness equivalent to surface in place, see plans.

INDIANA DEPARTMENT OF TRANSPORTATION

CLASS VII DRIVE
(INDUSTRIAL)

SEPTEMBER 2026

STANDARD DRAWING NO. E 610-DRIV-08

ELIZABETH P. MOUSER REGISTERED No. 10200124 STATE OF INDIANA PROFESSIONAL ENGINEER

03/02/2026
DESIGN STANDARDS ENGINEER DATE

04/08/2026
CHIEF ENGINEER DATE

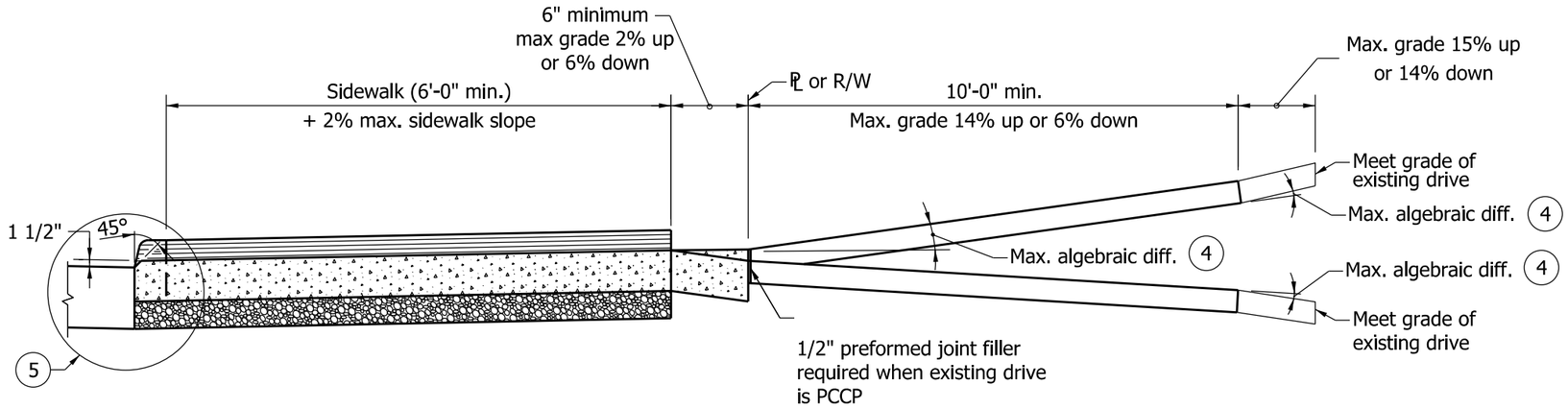

SECTION A-A
(SIDEWALK ABUTS BACKFACE OF CURB)

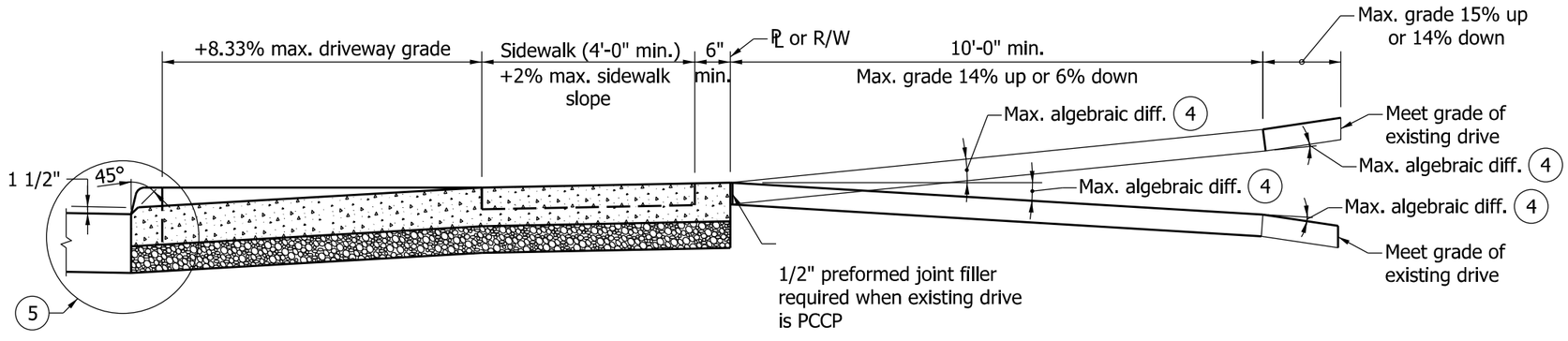

SECTION B-B
(SIDEWALK SEPARATED FROM BACK OF CURB BY BUFFER)

NOTES:

1. See Standard Drawing E 610-DRIV-02 for Class I Drive pavement section.
2. See Standard Drawing E 610-DRIV-04 for Class III Drive pavement section.
3. See Standard Drawing E 604-SDWK-03 for sidewalk driveway crossing details.

(4) The maximum algebraic difference in grades shall not exceed 8% for crested grade nor 12% for sagged grade.

(5) See Standard Drawing E 610-DRIV-14 for joint placement, monolithic curb, and concrete curb and gutter details.

LEGEND

= Curb ramp or sidewalk elevation transition.

= PCCP

INDIANA DEPARTMENT OF TRANSPORTATION

CLASS I AND CLASS III DRIVE
APPROACH GRADES

SEPTEMBER 2026

STANDARD DRAWING NO. E 610-DRIV-09

ELIZABETH P. MOUSER
REGISTERED
No. 10200124
STATE OF INDIANA
PROFESSIONAL ENGINEER

Elizabeth P Mouser 03/02/2026
DESIGN STANDARDS ENGINEER DATE

04/08/2026
CHIEF ENGINEER DATE

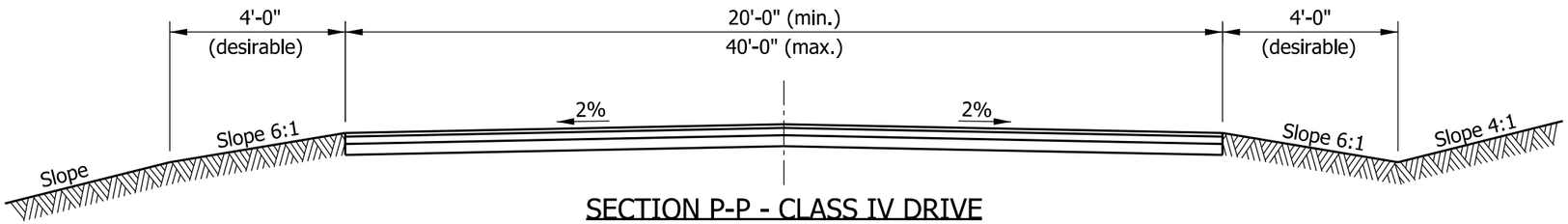

SECTION P-P - CLASS IV DRIVE

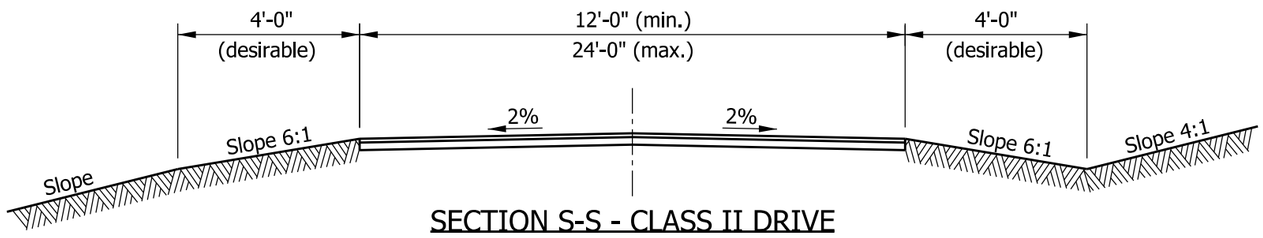

SECTION S-S - CLASS II DRIVE

NOTES:

1. See Standard Drawing E 610-DRIV-03 for Class II Drive details.
2. See Standard Drawing E 610-DRIV-05 for Class IV Drive details.

INDIANA DEPARTMENT OF TRANSPORTATION

CLASS II AND CLASS IV DRIVE SECTIONS

SEPTEMBER 2026

STANDARD DRAWING NO. E 610-DRIV-10

ELIZABETH P. MOUSER
REGISTERED
No. 10200124
STATE OF INDIANA
PROFESSIONAL ENGINEER

03/02/2026
DESIGN STANDARDS ENGINEER DATE

04/08/2026
CHIEF ENGINEER DATE

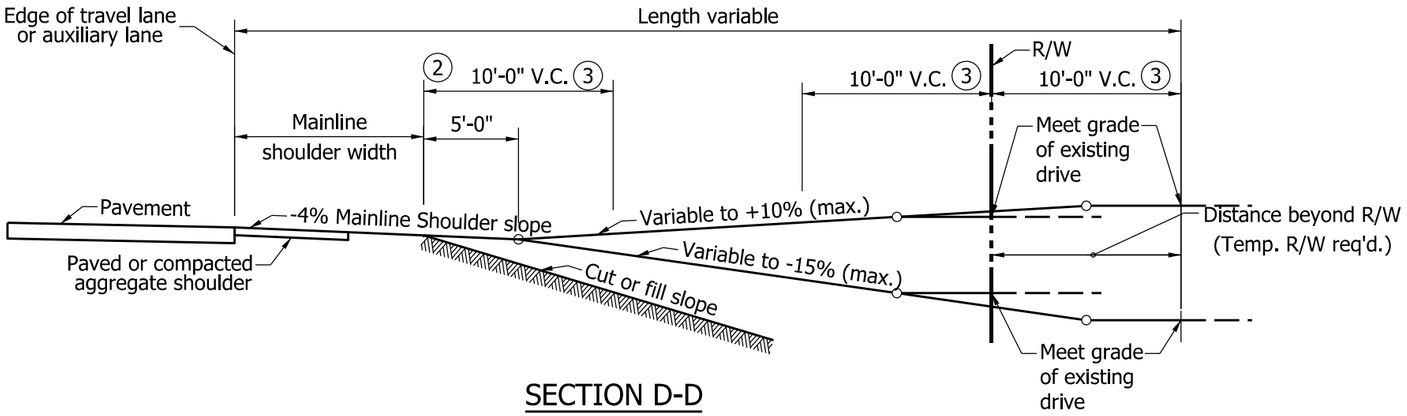

SECTION D-D

(TO BE USED WITH PAVED SHOULDER LESS THAN 8'-0" WIDE OR COMPACTED AGGREGATE SHOULDER)

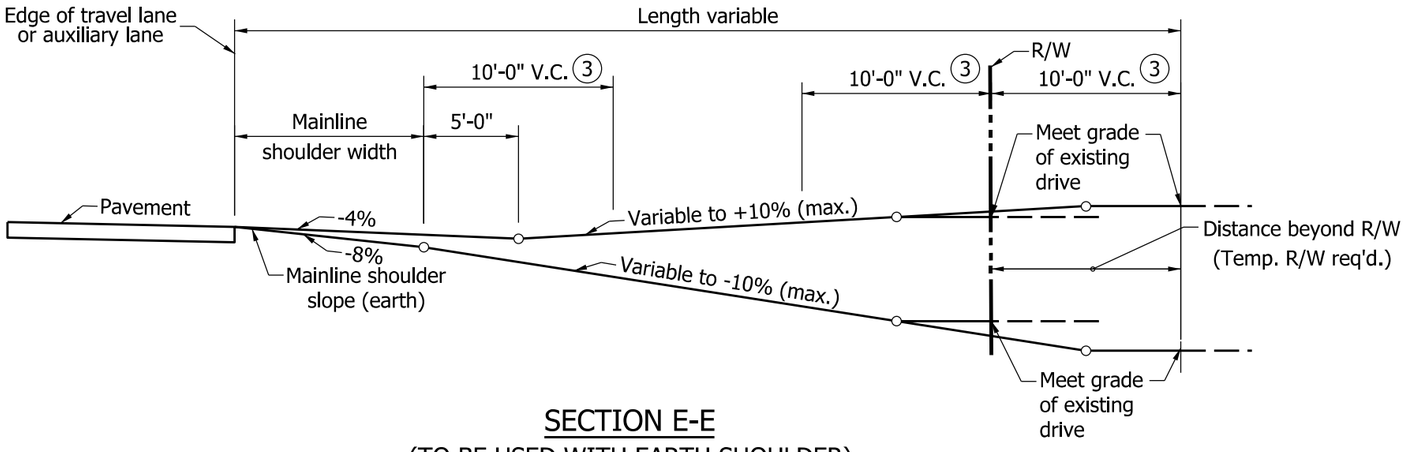

SECTION E-E

(TO BE USED WITH EARTH SHOULDER)

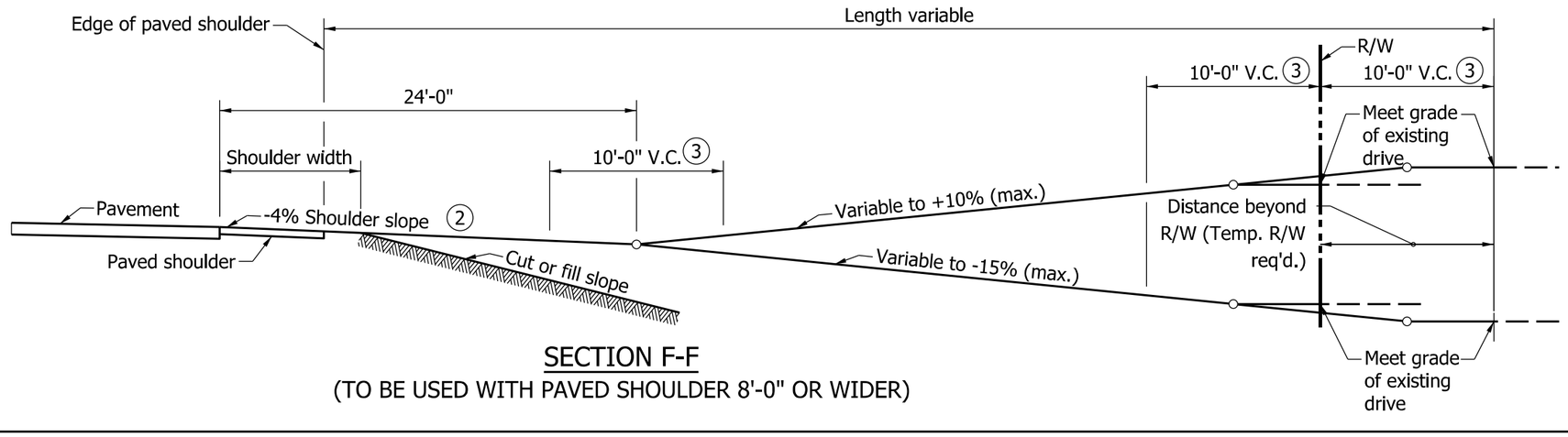

SECTION F-F

(TO BE USED WITH PAVED SHOULDER 8'-0" OR WIDER)

NOTES:

1. See Standard Drawing E 610-DRIV-03, -05 and -06 for location of Sections D-D, E-E and F-F.

(2) Where physical restrictions limits the space available for the construction of a drive from a roadway in an embankment section, the downgrade breakpoint of the drive may begin at the edge of the shoulder without a crest vertical curve. The algebraic difference in grades shall not exceed 11%.

(3) The maximum algebraic difference in grades shall not exceed 11% for crested grade and 14% for sagged grades.

INDIANA DEPARTMENT OF TRANSPORTATION

CLASS II, IV & V DRIVE APPROACH GRADES

SEPTEMBER 2026

STANDARD DRAWING NO. E 610-DRIV-11

ELIZABETH P. MOUSER REGISTERED No. 10200124 STATE OF INDIANA PROFESSIONAL ENGINEER

Elizabeth P Mouser 03/02/2026
DESIGN STANDARDS ENGINEER DATE

04/08/2026
CHIEF ENGINEER DATE

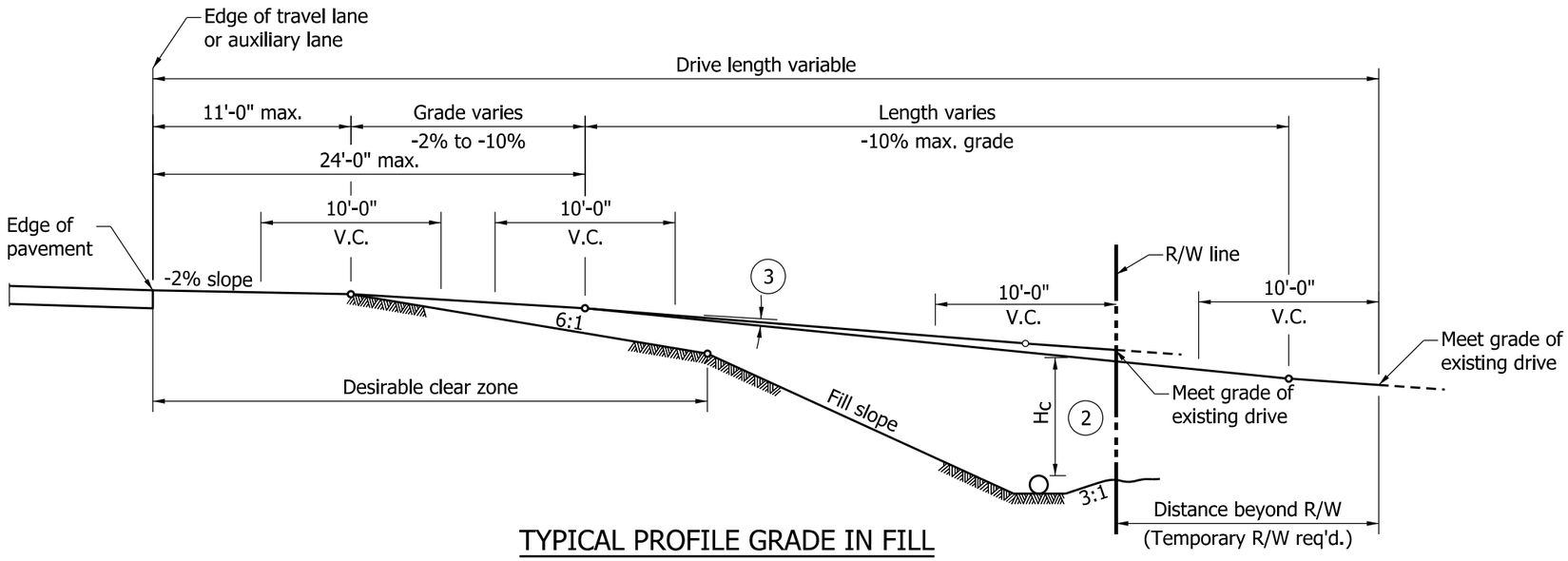

TYPICAL PROFILE GRADE IN FILL

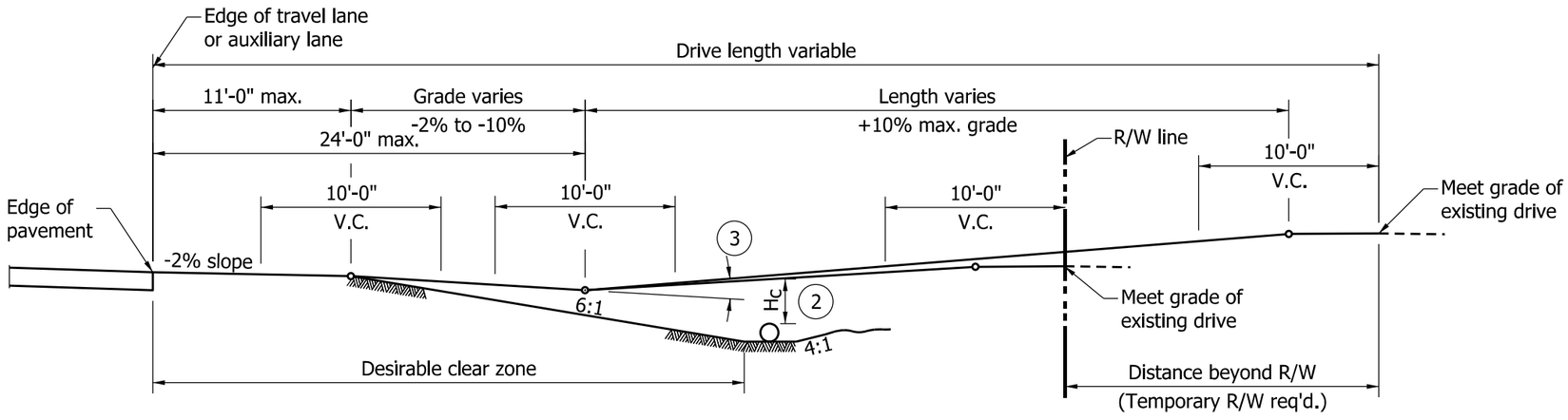

TYPICAL PROFILE GRADE IN CUT

NOTES:

1. See Standard Drawing E 610-DRIV-07 for plan and sections of Class VI Drive.

(2) The earth cover shall be 1 ft or greater.

(3) The maximum algebraic difference in grades shall not exceed 11% for crested grade and 14% for sagged grades.

INDIANA DEPARTMENT OF TRANSPORTATION

CLASS VI DRIVE
APPROACH GRADES

SEPTEMBER 2026

STANDARD DRAWING NO. E 610-DRIV-12

ELIZABETH P. MOUSER
REGISTERED
No. 10200124
STATE OF INDIANA
PROFESSIONAL ENGINEER

03/02/2026
DESIGN STANDARDS ENGINEER DATE

04/08/2026
CHIEF ENGINEER DATE

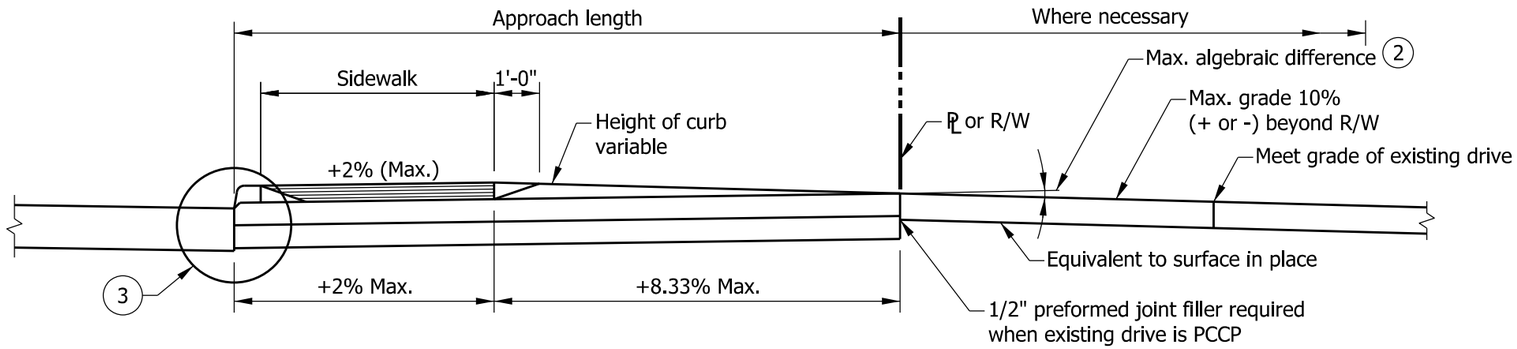

SECTION A-A

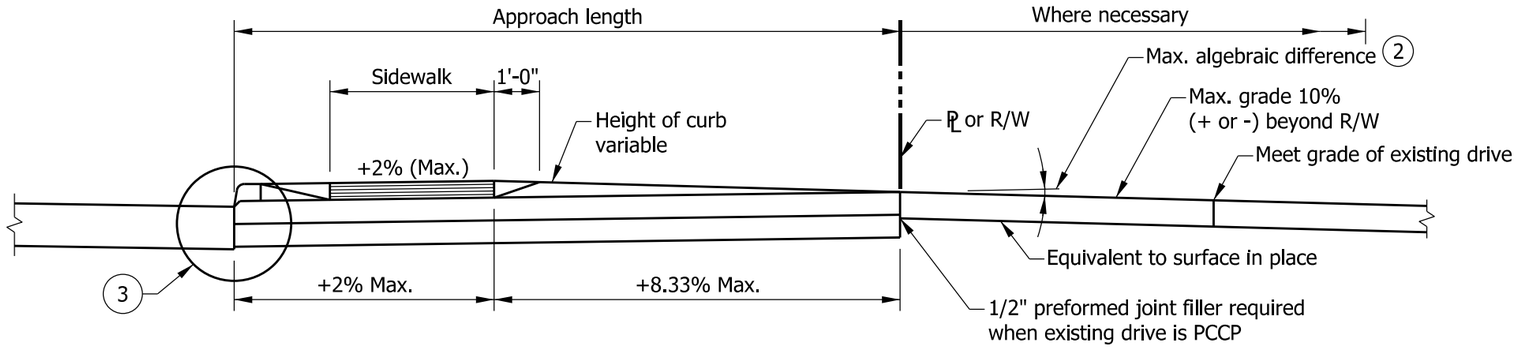

SECTION B-B

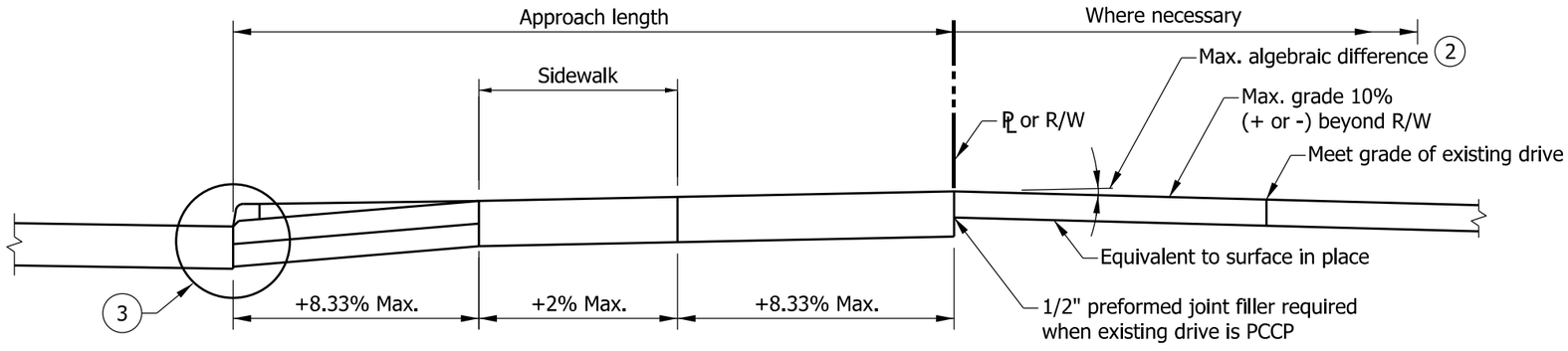

SECTION C-C

NOTES:

1. See Standard Drawing E 610-DRIV-08 for Class VII Drive details.

(2) The maximum algebraic difference in grades shall not exceed 8% for crested grades and 12% for sagged grade.

(3) See Standard Drawing E 610-DRIV-14 for joint placement, monolithic curb, and concrete curb and gutter details.

INDIANA DEPARTMENT OF TRANSPORTATION

CLASS VII DRIVE
APPROACH GRADES

SEPTEMBER 2026

STANDARD DRAWING NO. E 610-DRIV-13

ELIZABETH P. MOUSER
REGISTERED
No.
10200124
STATE OF
INDIANA
PROFESSIONAL ENGINEER

03/02/2026
DESIGN STANDARDS ENGINEER DATE

04/08/2026
CHIEF ENGINEER DATE

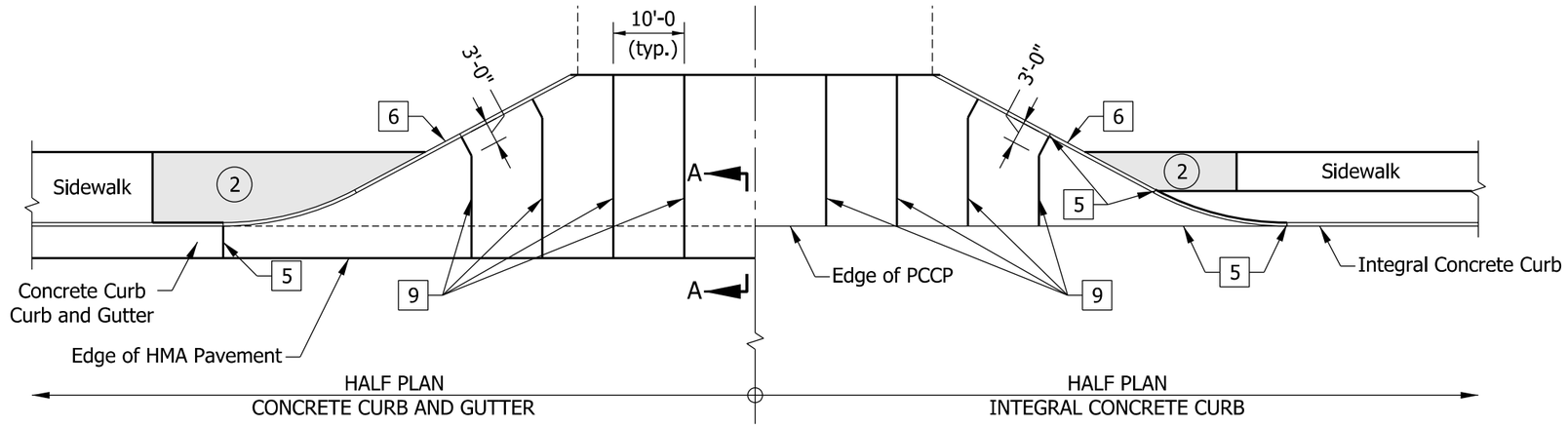

JOINT PLACEMENT DETAIL FOR PCCP DRIVES

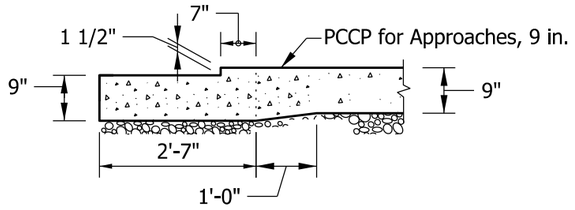

CLASS III AND CLASS VII DRIVE
CONCRETE CURB AND GUTTER DETAIL

SECTION A-A

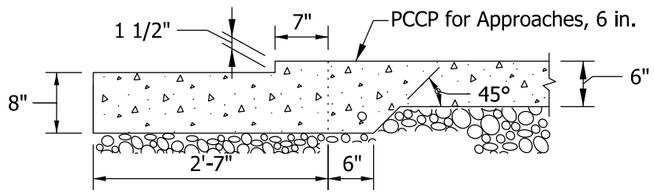

CLASS I DRIVE
CONCRETE CURB AND GUTTER DETAIL

SECTION A-A

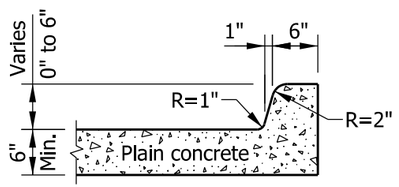

MONOLITHIC CURB

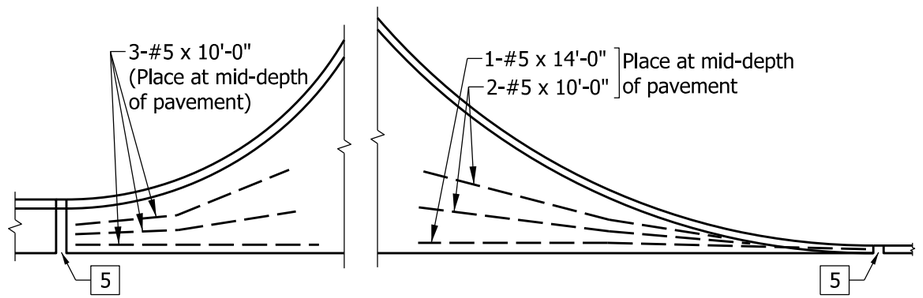

CONCRETE CURB AND GUTTER INTEGRAL CONCRETE CURB

TYPICAL CORNER REINFORCING FOR CLASS I DRIVE

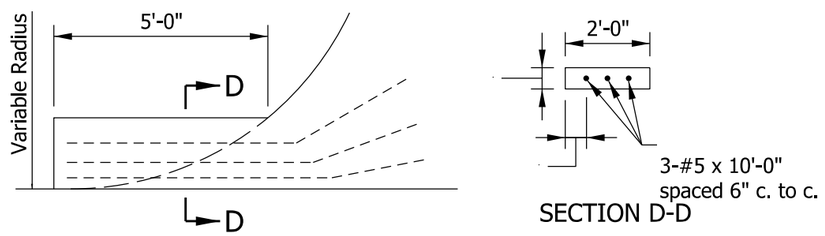

TYPICAL CORNER REINFORCING FOR CLASS II DRIVE

NOTES:

1. See Standard Drawing E 503-CCPJ for joint details.
2. See Standard Drawing E 604-SDWK-03 for sidewalk driveway crossing details.

LEGEND

- 5 1/2" Preformed Joint Filler
- 6 Monolithic Curb
- 9 Longitudinal Joint

INDIANA DEPARTMENT OF TRANSPORTATION

JOINT PLACEMENT, CORNER REINFORCING, MONOLITHIC CURB, AND CONCRETE CURB AND GUTTER DETAILS

SEPTEMBER 2026

STANDARD DRAWING NO. E 610-DRIV-14

ELIZABETH P. MOUSER REGISTERED No. 10200124 STATE OF INDIANA PROFESSIONAL ENGINEER

DESIGN STANDARDS ENGINEER — DATE 03/02/2026

CHIEF ENGINEER — DATE 04/08/2026

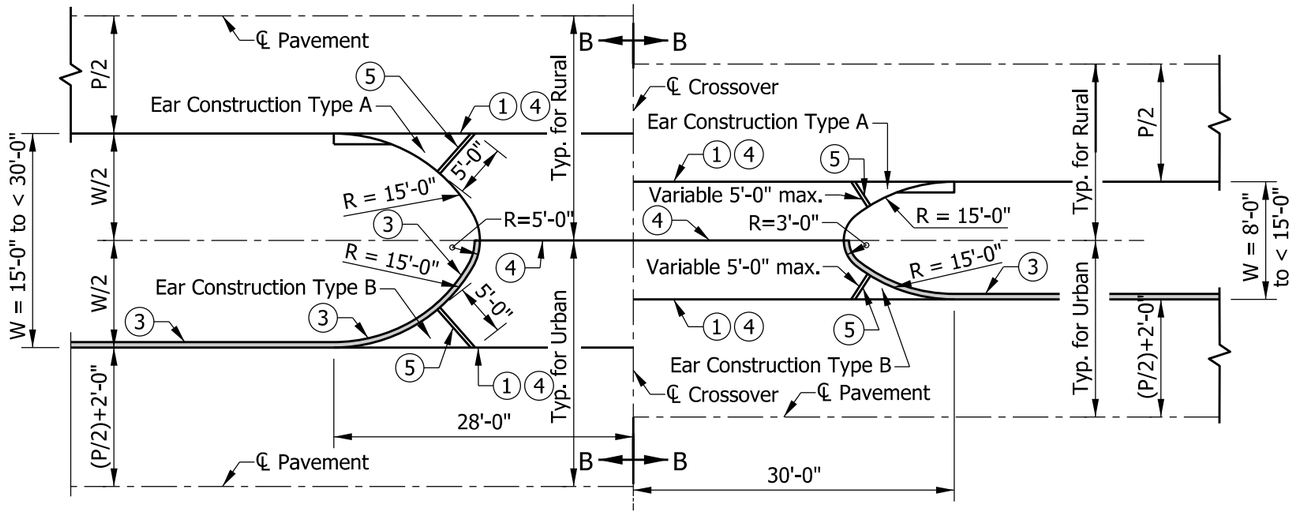

PRIVATE DRIVE CROSSOVER PLAN FOR W = 8'-0" to less than 30'-0"

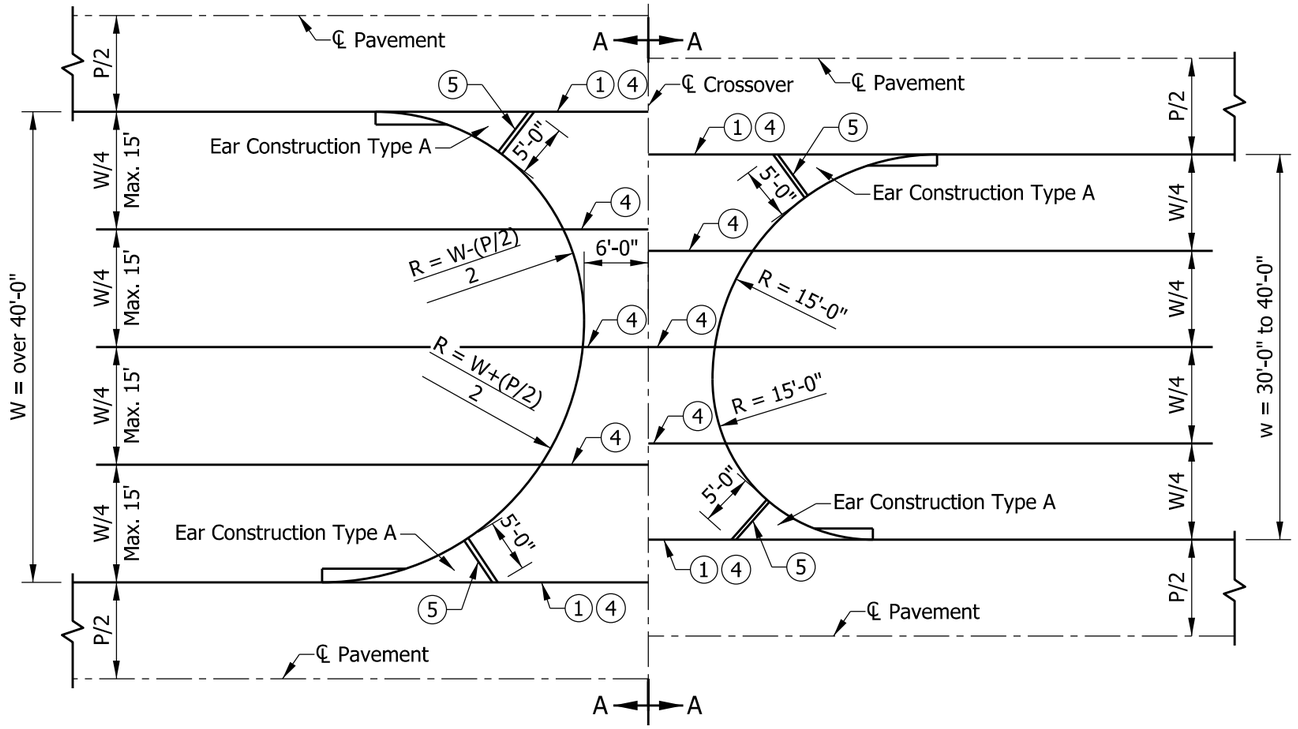

PRIVATE DRIVE CROSSOVER PLAN FOR W = 30'-0" to over 40'-0"

NOTES:

(1) Thickened edge

2. See Standard Drawings:

   E 605-ERCN-01 for Ear Construction Type "A" and Type "B" details.
   E 610-DRIV-16 for sections A-A and B-B.

(3) See Standard Drawing E 605-CCIN-01 for Integral Concrete Curb details.

(4) Longitudinal Joint, see Standard Drawing series E 503-CCPJ for joint details.

(5) 1 inch Preformed Joint Filler.

6. See Standard Drawing E 610-DRIV-16 for sections A-A and B-B for PCCP AND HMA pavement.

LEGEND

P/2 = Width of travel lanes

W = Width of median

INDIANA DEPARTMENT OF TRANSPORTATION

PRIVATE DRIVE CROSSOVER PLANS

SEPTEMBER 2026

STANDARD DRAWING NO. E 610-DRIV-15

ELIZABETH P. MOUSER REGISTERED No. 10200124 STATE OF INDIANA PROFESSIONAL ENGINEER

03/02/2026
DESIGN STANDARDS ENGINEER DATE

04/08/2026
CHIEF ENGINEER DATE

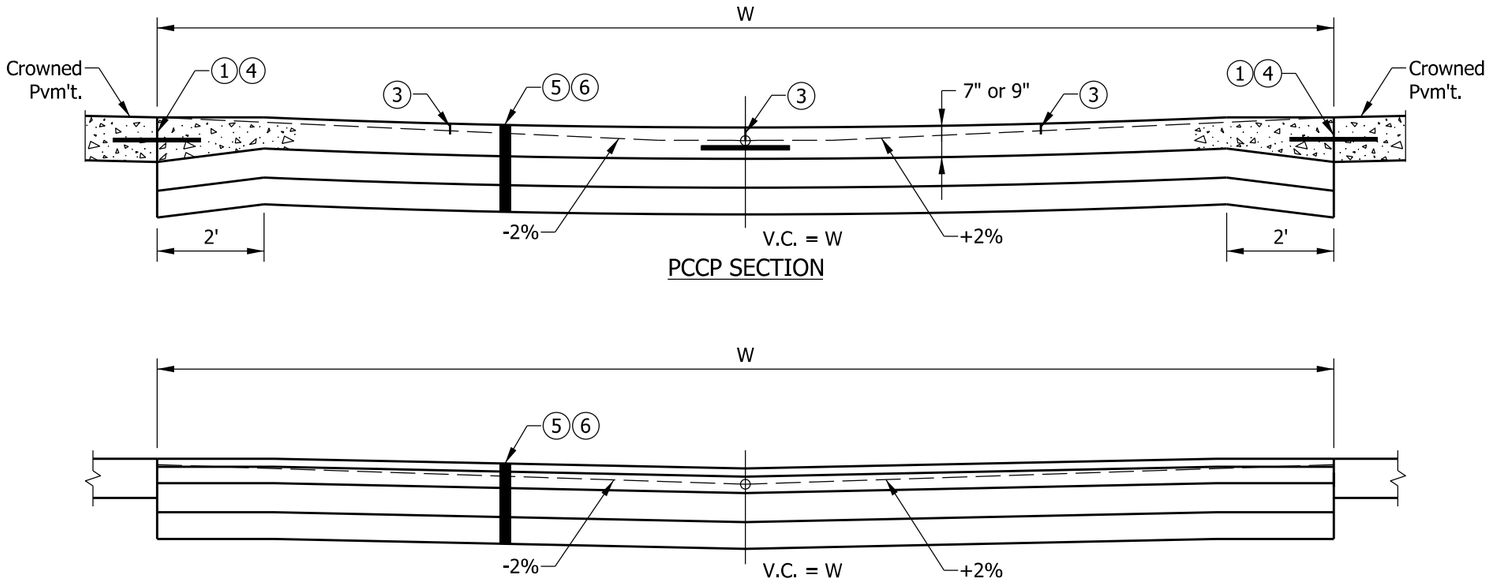

PCCP SECTION

HMA SECTION

SECTION A-A

SECTION TO BE USED WITH CROWN PAVEMENT

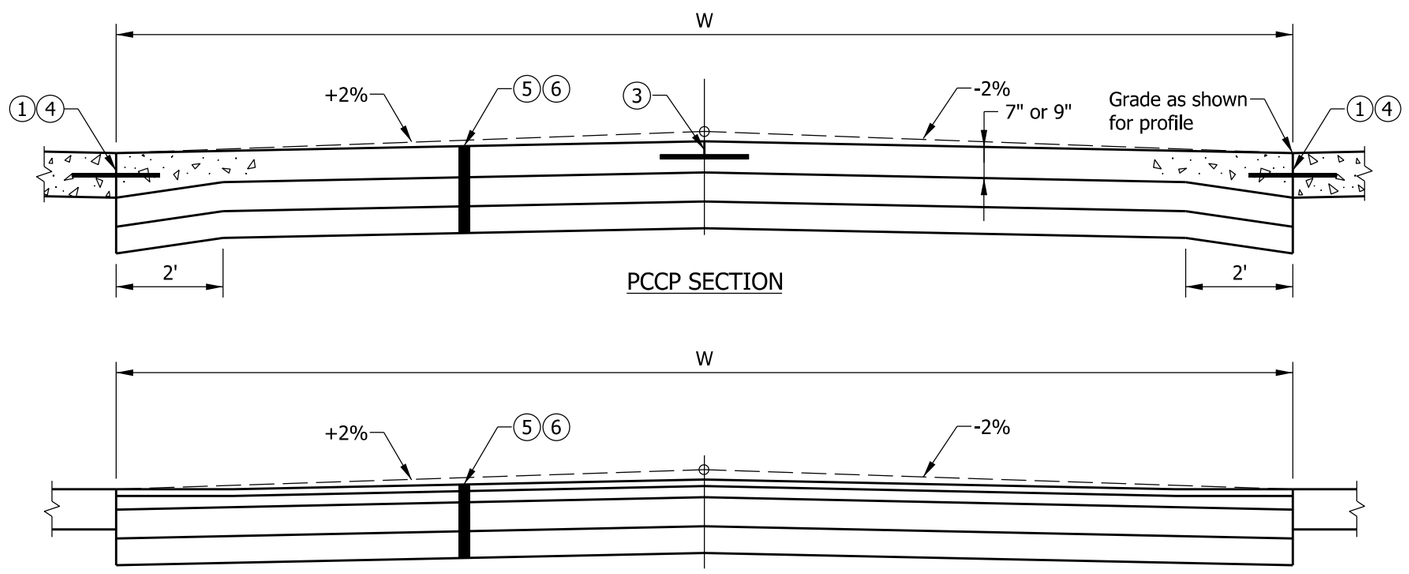

PCCP SECTION

HMA SECTION

SECTION B-B

SECTION TO BE USED WITH 3-IN. TILTED PAVEMENT

NOTES:

(1) Thickened edge to be same thickness as mainline pavement.

2. See Standard Drawing E 610-DRIV-15 for location of sections A-A and B-B.

(3) Contraction Joint Type D-1. See Standard Drawing E 503-CCPJ-03 for details, and Standard Drawing E 610-DRIV-14 for spacing.

(4) Longitudinal Joint, see Standard Drawing series E 503-CCPJ for joint details.

(5) Private Drive Crossover shall be constructed of HMA or PCCP as shown on the plans, unless otherwise directed.
For AADTT ≤ 50
HMA for Approaches, Type B, consisting of:
165 lbs/yd² HMA Surface Type B on
275 lbs/yd² HMA Intermediate, Type B on
6 in. Compacted Aggregate, No. 53 on
Subgrade Treatment, Type II (6 in. Coarse Aggregate, No. 53)
or
PCCP for Approaches, 6 in., on
Dense Graded Subbase, 6 in., on
Subgrade Treatment Type II (6 in. Coarse Aggregate, No. 53)

(6) Commercial Drive Crossover shall be constructed of HMA or PCCP as shown on the plans, unless otherwise directed.
For AADTT ≤ 400
HMA for Approaches, Type B, consisting of:
165 lbs/yd² HMA Surface Type B on
275 lbs/yd² HMA Intermediate, Type B on
660 lbs/yd² HMA Base, Type B on
Subgrade Treatment, Type II (6 in. Coarse Aggregate, No. 53) on
Geogrid Type IB
or
PCCP for Approaches, 9 in. on
Dense Graded Subbase, 6 in., on
Geogrid Type IB on
Subgrade Treatment Type II (6 in. Coarse Aggregate, No. 53)

INDIANA DEPARTMENT OF TRANSPORTATION

PRIVATE AND COMMERCIAL DRIVE CROSSOVER SECTIONS

SEPTEMBER 2026

STANDARD DRAWING NO. E 610-DRIV-16

ELIZABETH P. MOUSER
REGISTERED
No. 10200124
STATE OF INDIANA
PROFESSIONAL ENGINEER

Elizabeth P Mouser 03/02/2026
DESIGN STANDARDS ENGINEER DATE

04/08/2026
CHIEF ENGINEER DATE

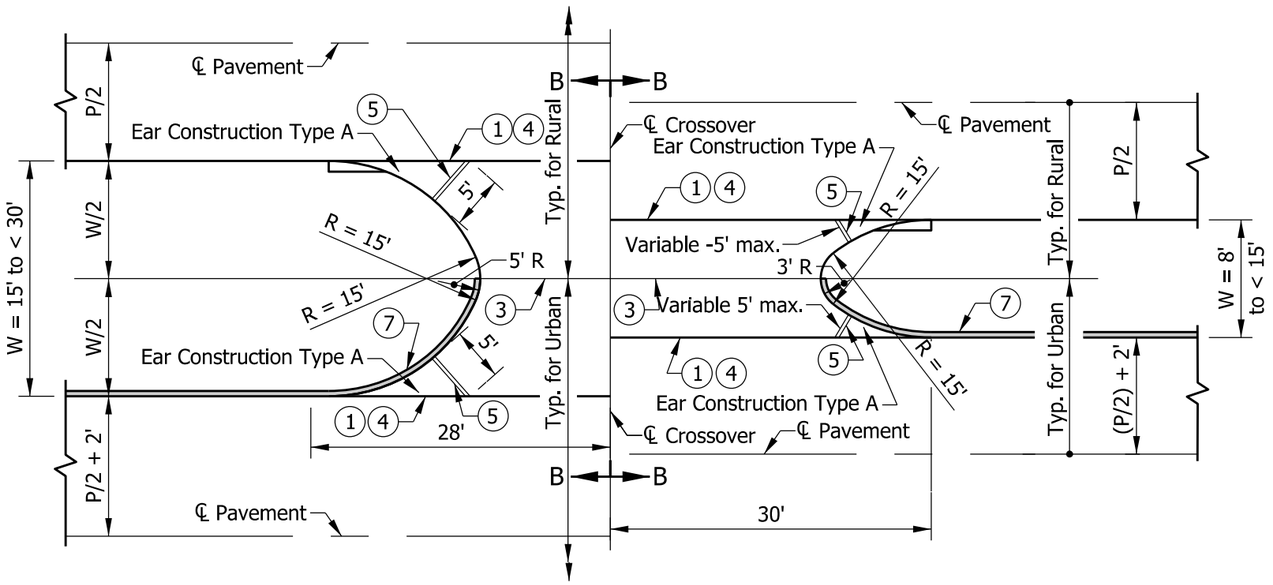

COMMERCIAL DRIVE CROSSOVER PLAN FOR W = 8' to less than 30'

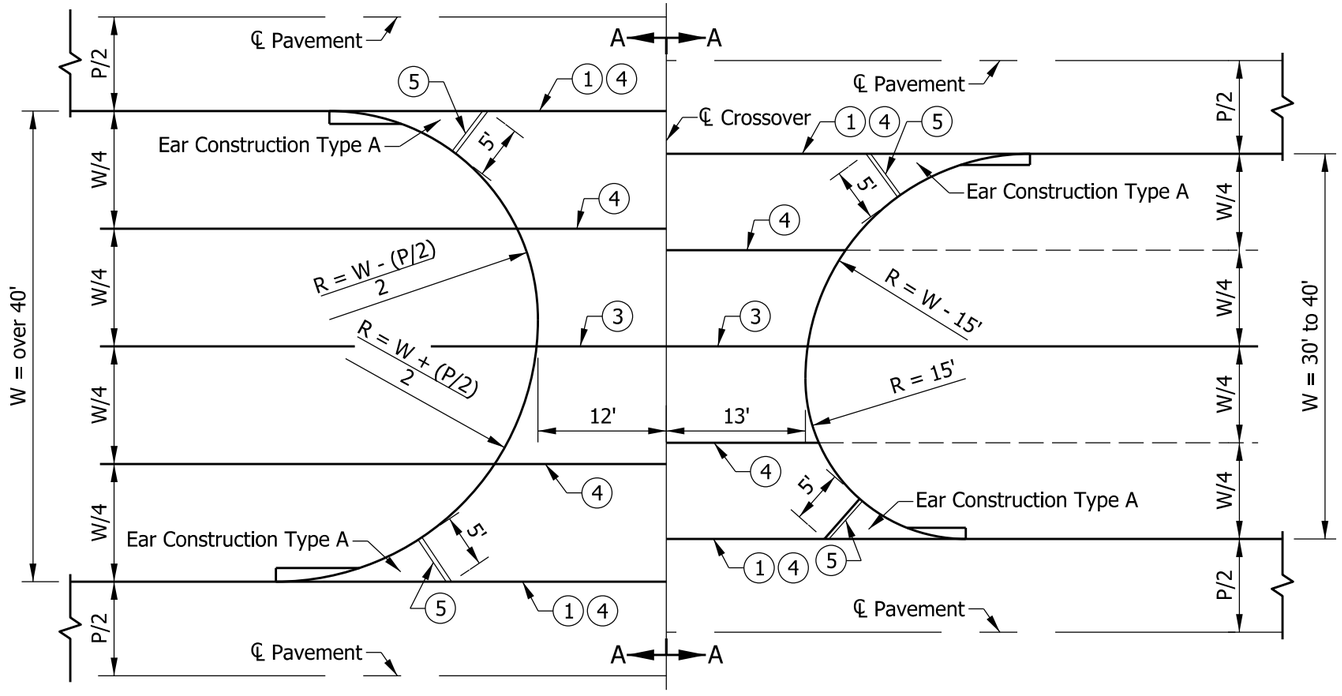

COMMERCIAL DRIVE CROSSOVER PLAN FOR W = 30' to over 40'

NOTES:

1. Thickened edge.
2. See Standard Drawing:
   E 605-ERCN-01 for Ear Construction for Type "A" and Type "B" details.
3. Contraction Joint, Type D-1, see Standard Drawing series E 503-CCPJ for joint details.
4. Longitudinal joint, see Standard Drawing series E 503-CCPJ for joint details.
5. 1 inch Preformed Joint Filler.
6. Grades for commercial drive crossover shall be the same as for private drive crossover. See Standard Drawing E 610-DRIV-16 for sections A-A and B-B for PCCP and HMA pavement.
7. See Standard Drawing E 605-CCIN-01 for Integral Concrete Curb details.

LEGEND

P/2 = Width of travel lanes

W = Width of median

INDIANA DEPARTMENT OF TRANSPORTATION

COMMERCIAL DRIVE CROSSOVER PLANS

SEPTEMBER 2026

STANDARD DRAWING NO. E 610-DRIV-17

ELIZABETH P. MOUSER REGISTERED No. 10200124 STATE OF INDIANA PROFESSIONAL ENGINEER

DESIGN STANDARDS ENGINEER — DATE 03/02/2026

CHIEF ENGINEER — DATE 04/08/2026

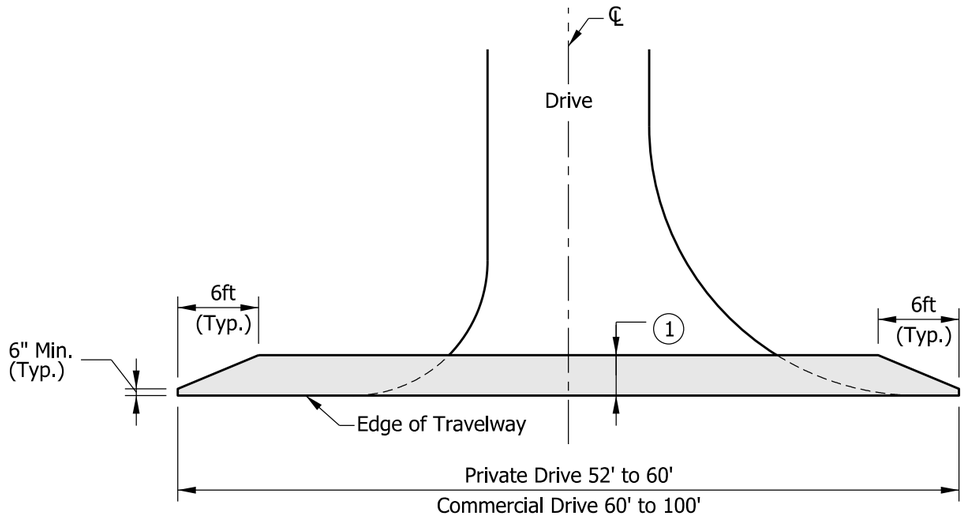

PAVEMENT WEDGE PLAN VIEW

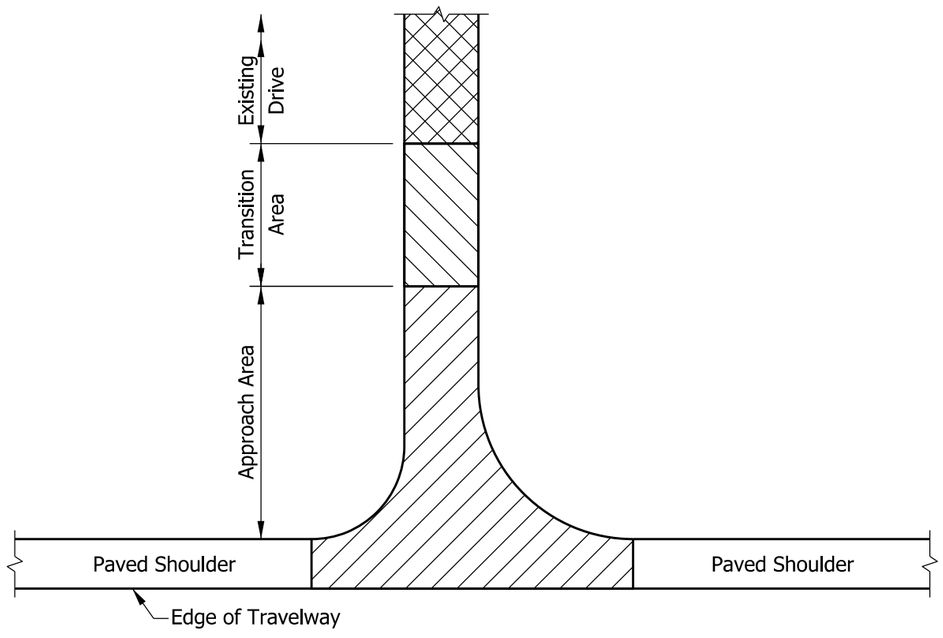

PAY LIMITS FOR CLASS II, IV, AND VI DRIVES

NOTES:

(1) 3 ft or wider as necessary to feather to existing grade.

2. Pavement wedge to be centered on centerline of drive.

3. The pay limits shown herein generally apply to Class II, IV, and VI Drives.

4. Approach Area - HMA for Approaches or PCCP for Approaches. This area typically extends from the edge of an 8 foot or wider paved shoulder to the right of way or property line or within a few feet of the right of way or property line where the new drive meets the grade of the existing drive, depending on the site-specific conditions. Where the paved shoulder width is less than 8 feet, this area will be measured from the edge of travelway.

5. Transition Area - an equivalent pavement section to the existing drive. This area typically extends from the right of way or property line to a point on the property owner's drive where the new drive grade can match the existing drive grade.

LEGEND

Drive area to be treated with HMA for Approaches

INDIANA DEPARTMENT OF TRANSPORTATION

PAVEMENT WEDGE AND PAY LIMITS FOR CLASS II, IV AND VI DRIVES

SEPTEMBER 2026

STANDARD DRAWING NO. E 610-DRIV-18

ELIZABETH P. MOUSER
REGISTERED
No. 10200124
STATE OF INDIANA
PROFESSIONAL ENGINEER

03/02/2026
DESIGN STANDARDS ENGINEER — DATE

04/08/2026
CHIEF ENGINEER — DATE

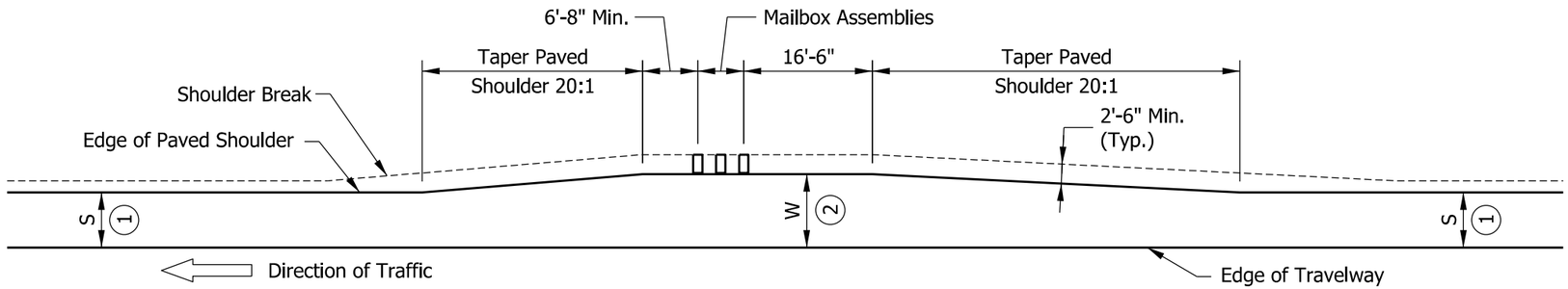

TYPICAL MAILBOX APPROACH

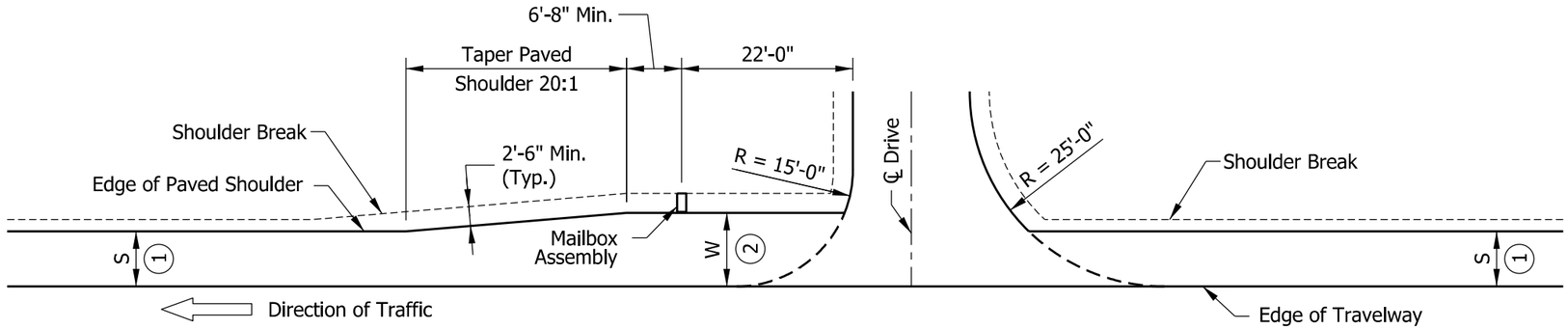

COMBINATION MAILBOX APPROACH & DRIVE
(Mailbox Located Beyond Drive)

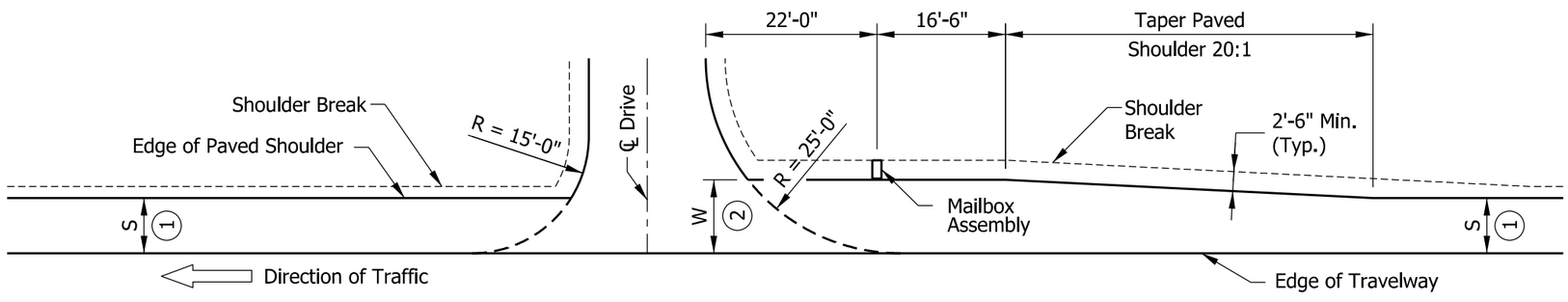

COMBINATION MAILBOX APPROACH & DRIVE
(Mailbox Located in Advance of Drive)

NOTES:

1. S = Normal width of paved shoulder as shown on plans.
2. See plans for W.
3. Mailbox approach pavement section shall be the same as the shoulder pavement section.

INDIANA DEPARTMENT OF TRANSPORTATION

MAILBOX APPROACHES
HIGH SPEED ROADWAY
(V ≥ 50 MPH)
SEPTEMBER 2014

STANDARD DRAWING NO. E 610-MBAP-01

RICHARD L. VanCLEAVE
REGISTERED
No. 9750
STATE OF INDIANA
PROFESSIONAL ENGINEER

/s/ Richard L. VanCleave 02/20/14
DESIGN STANDARDS ENGINEER DATE

/s/ Mark A. Miller 03/03/14
CHIEF ENGINEER DATE

NOTES:

1. S = Normal width of paved shoulder as shown on plans.
2. See plans for W.
3. Mailbox approach pavement section shall be the same as the shoulder pavement section.

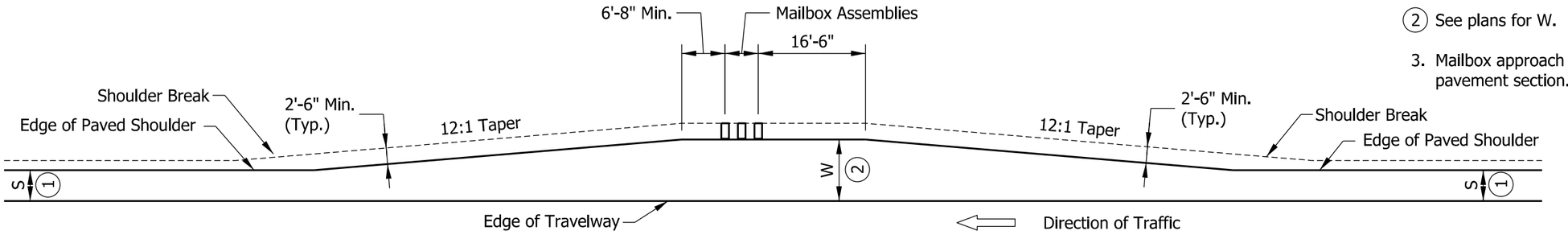

TYPICAL MAILBOX APPROACH

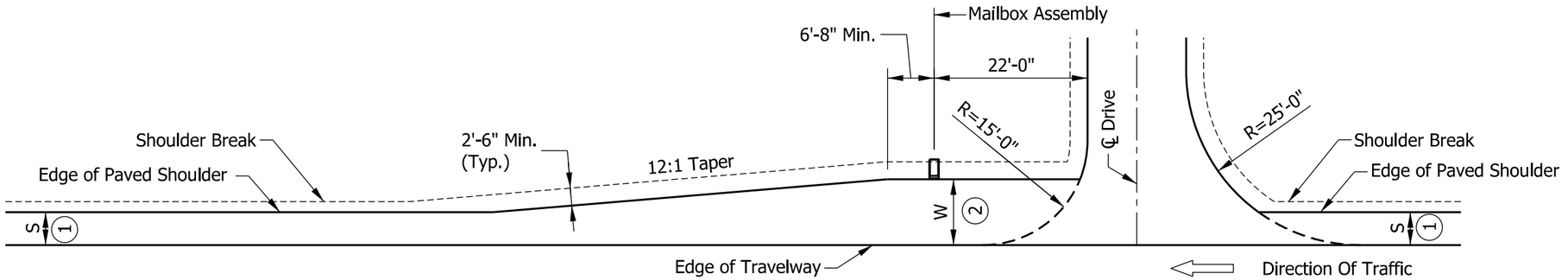

COMBINATION MAILBOX APPROACH & DRIVE
(Mailbox Located Beyond Drive)

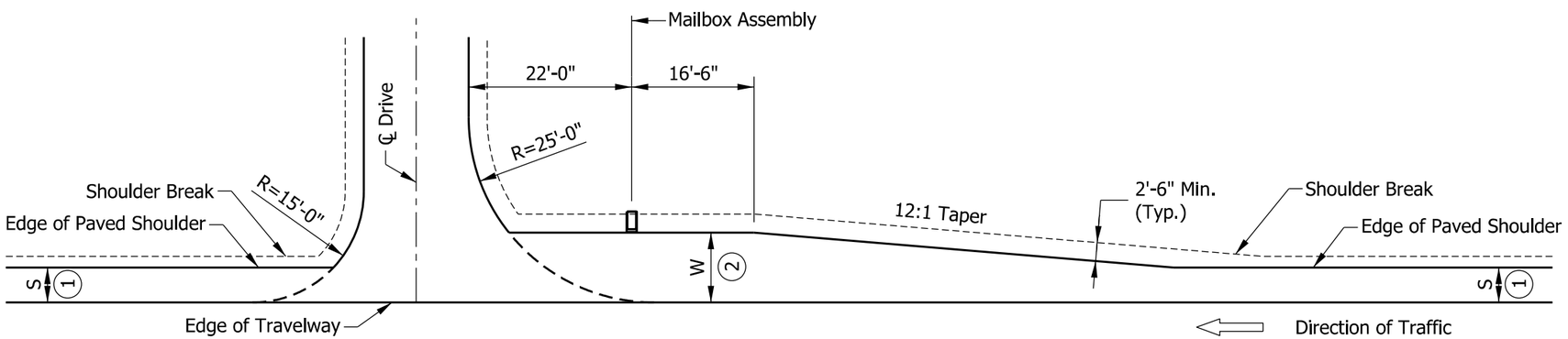

COMBINATION MAILBOX APPROACH & DRIVE
(Mailbox Located in Advance of Drive)

INDIANA DEPARTMENT OF TRANSPORTATION

MAILBOX APPROACHES
LOW SPEED ROADWAY
(V ≤ 45 MPH)
SEPTEMBER 2014

STANDARD DRAWING NO. E 610-MBAP-02

RICHARD L. VanCLEAVE
REGISTERED
No. 9750
STATE OF INDIANA
PROFESSIONAL ENGINEER

/s/ Richard L. VanCleave 02/20/14
DESIGN STANDARDS ENGINEER DATE

/s/ Mark A. Miller 03/03/14
CHIEF ENGINEER DATE

INDEX

SHEET NO.	SUBJECT
1	Public Road Approach Index and General Notes
2	Public Road Approach Type A
3	Public Road Approach Type B
4	Public Road Approach Type A & Type B Table of Values
5	Public Road Approach Type C
6	Public Road Approach Type C Table of Values
7	Public Road Approach Type D
8	Public Road Approach Type D Table of Values
9	Public Road Approach Pay Limit Details
10	Street or Alley Approach PCCP or HMA Mainline Pavement
11	Public Road Approach Overlay Paving Transition

GENERAL NOTES:

1. Embankment slopes on either side of an approach or drive within the mainline clear zone for new construction/reconstruction projects or the obstruction free zone on 3R projects should conform to the following table:

DESIGN SPEED		≥ 50 mph		≤ 45 (mph)
Design Year AADT		≥ 6000	< 6000	All
Multi-Lane Divided, All Functional Classes	Incoming Slope	10:1	10:1	10:1
	Outgoing Slope	4:1	4:1	4:1
Multi-Lane Undivided, All Functional Classes	Incoming Slope	10:1	6:1	6:1
	Outgoing Slope	4:1	4:1	4:1
2-Lane Arterial or Collector		6:1	6:1	4:1
2-Lane Local Road		4:1	4:1	4:1

Outside the clear zone or the obstruction free zone, the embankment slopes should desirably be 4:1 but not steeper than 3:1.

2. Cross culverts under the public road approach which cannot be located outside the mainline clear zone will require appropriate end treatments at each end as shown on the plans.

3. If the approach is to be constructed of PCCP, the details shall be as shown elsewhere in the plan for thickness, joint type, and location.

TABLE A

Design Speed (mph)	MINIMUM LENGTH OF RIGHT TURN LANE (excluding taper) , ft							
	Downgrade Slope in %				Upgrade Slope in %			
	6 to 5	4.99 to 4	3.99 to 3	2.99 to 0	0 to 2.99	3 to 3.99	4 to 4.99	5 to 6
40	435	410	385	320	320	290	275	260
45	520	495	465	385	385	350	330	310
50	590	560	525	435	435	395	370	350
55	650	615	580	480	480	435	410	385
60	720	680	640	530	530	480	455	425

INDIANA DEPARTMENT OF TRANSPORTATION

PUBLIC ROAD APPROACH
INDEX SHEET AND GENERAL NOTES

SEPTEMBER 2026

STANDARD DRAWING NO. E 610-PRAP-01

ELIZABETH P. MOUSER REGISTERED No. 10200124 STATE OF INDIANA PROFESSIONAL ENGINEER

DESIGN STANDARDS ENGINEER — DATE 03/02/2026

CHIEF ENGINEER — DATE 04/08/2026

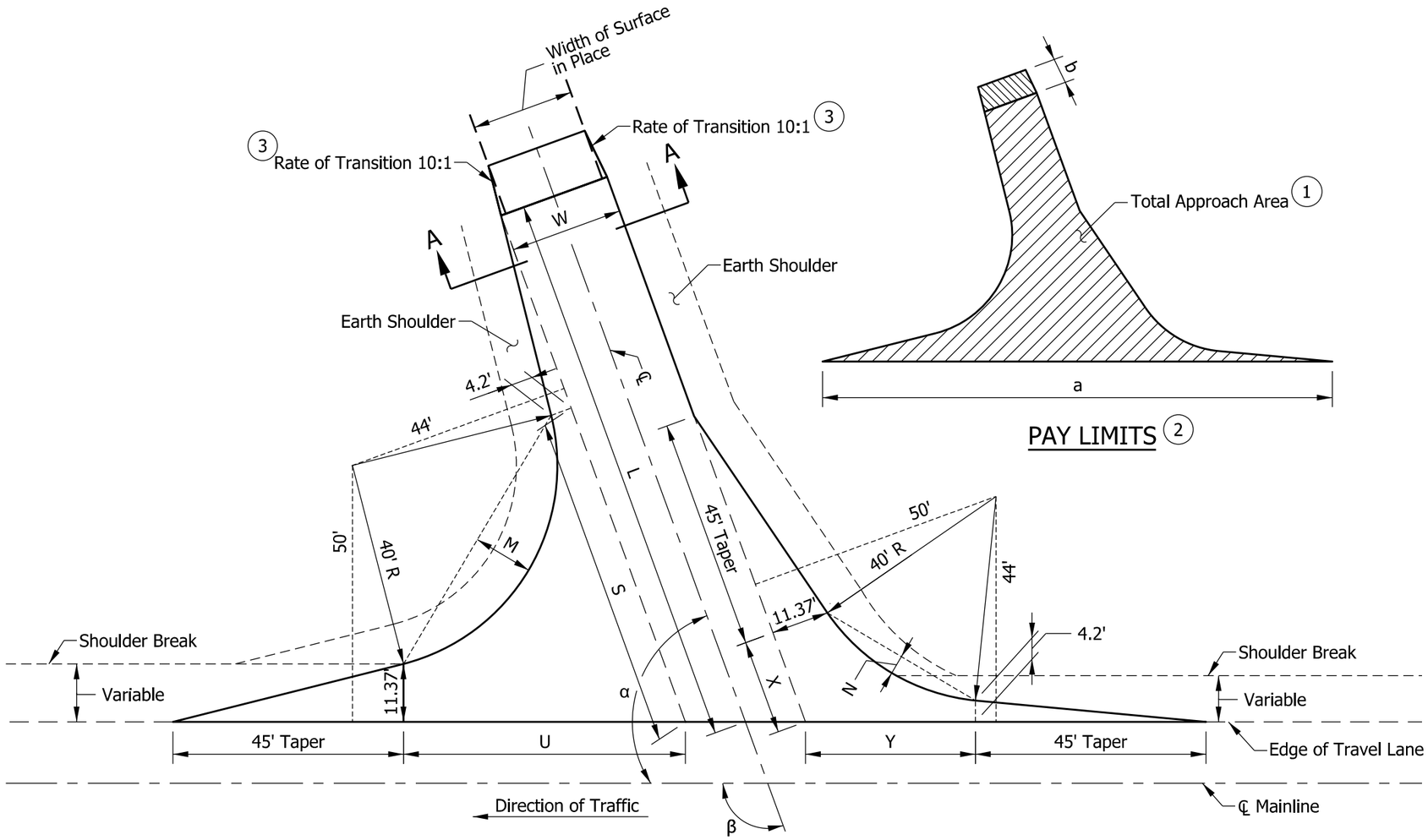

PUBLIC ROAD APPROACH TYPE A

PAY LIMITS 2

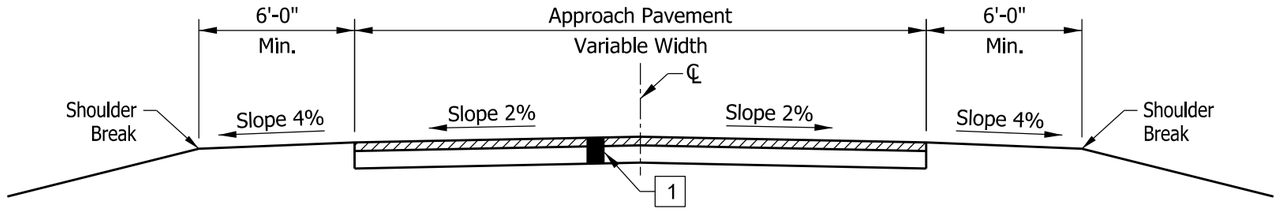

SECTION A-A MINIMUM PAVEMENT SECTION 4

NOTES:

1. See Standard Drawing E 610-PRAP-04 for Table of Values.
2. See Table on Standard Drawing E 610-PRAP-09 for additional pay limits details.
3. If the existing pavement is asphalt, the transition area shall be the same section as the approach and will be included in the pay limits for HMA for Approaches.
4. If the AADTT (Trucks Class 4 and above) is greater than 400 on the public road, the required pavement section shall be as shown elsewhere in the plans.

LEGEND

1 AADTT ≤ 400
HMA for Approaches, Type B, consisting of:
165 lbs/syd HMA Surface, Type B, on
275 lbs/syd HMA Intermediate, Type B, on
660 lbs/syd HMA Base, Type B, on
Subgrade Treatment Type II (6 in. Coarse Aggregate No. 53) on
Geogrid Type IB

INDIANA DEPARTMENT OF TRANSPORTATION

PUBLIC ROAD APPROACH
TYPE A

SEPTEMBER 2026

STANDARD DRAWING NO. E 610-PRAP-02

ELIZABETH P. MOUSER
REGISTERED
No. 10200124
STATE OF INDIANA
PROFESSIONAL ENGINEER

DESIGN STANDARDS ENGINEER — DATE 03/02/2026

CHIEF ENGINEER — DATE 04/08/2026

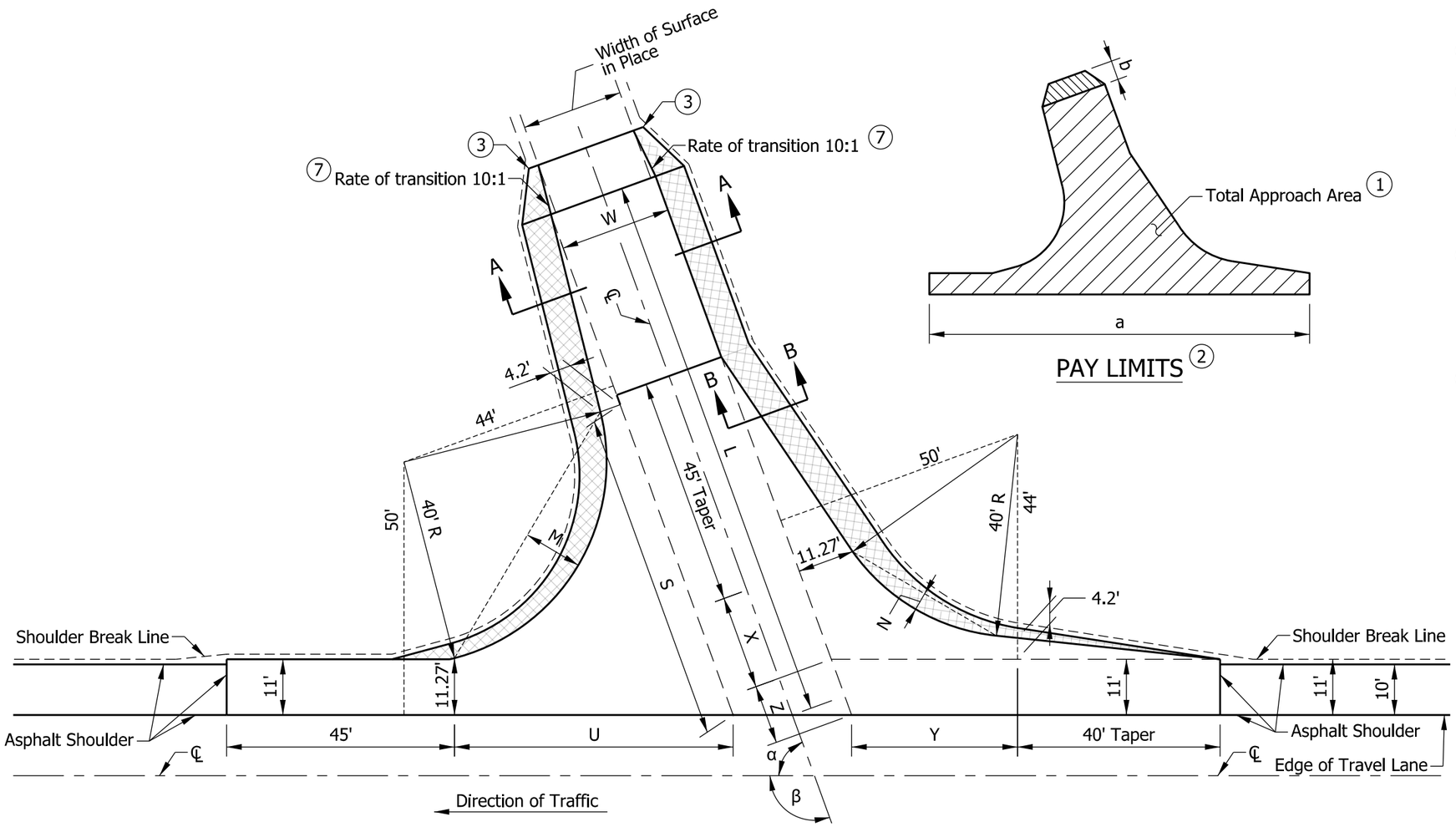

PUBLIC ROAD APPROACH TYPE B

PAY LIMITS 2

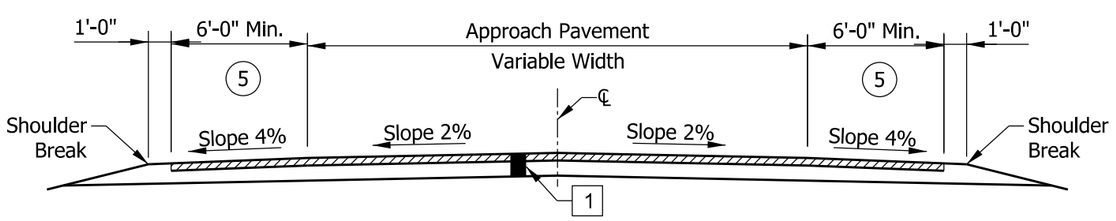

SECTION A-A MINIMUM PAVEMENT SECTION

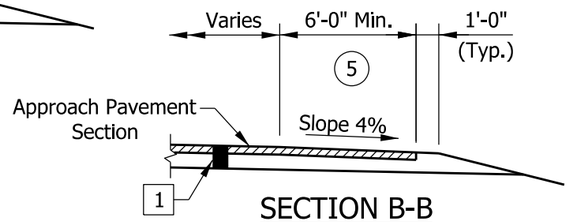

SECTION B-B

NOTES:

1. See Standard Drawing E 610-PRAP-04 for Table of Values.
2. See Standard Drawing E 610-PRAP-09 for pay limits details.
3. Match existing shoulder width. Minimum width is 2 ft.
4. If the AADTT (Trucks Class 4 and above) is greater than 400 on the public road, the required pavement section shall be as shown elsewhere in the plans.
5. The minimum shoulder width should match the existing public road or be 6 ft, which ever is larger.
6. The cross hatch ▨ shoulder area indicates the limits where the shoulder is the same as the approach pavement.
7. If the existing pavement is asphalt, the transition area shall be the same section as the approach and will be included in the pay limits for HMA for Approaches.

LEGEND

1 AADTT ≤ 400
HMA for Approaches, Type B, consisting of:
165 lbs/syd HMA Surface, Type B, on
275 lbs/syd HMA Intermediate, Type B, on
660 lbs/syd HMA Base, Type B, on
Subgrade Treatment Type II (6 in. Coarse Aggregate No. 53) on
Geogrid Type IB

INDIANA DEPARTMENT OF TRANSPORTATION

PUBLIC ROAD APPROACH
TYPE B

SEPTEMBER 2026

STANDARD DRAWING NO. E 610-PRAP-03

ELIZABETH P. MOUSER REGISTERED No. 10200124 STATE OF INDIANA PROFESSIONAL ENGINEER

03/02/2026
DESIGN STANDARDS ENGINEER DATE

04/08/2026
CHIEF ENGINEER DATE

β	L						Z	U	S	M	X	Y	N	TOTAL APPROACH AREA						β
	TYPE A			TYPE B										TYPE A			TYPE B			
	W=20	W=22	W=24	W=20	W=22	W=24								W=20	W=22	W=24	W=20	W=22	W=24	
(°)	(ft)	(ft)	(ft)	(ft)	(ft)	(ft)	(ft)	(ft)	(ft)	(ft)	(ft)	(ft)	(ft)	(sys)	(sys)	(sys)	(sys)	(sys)	(sys)	(°)
110	108.87	109.23	109.60	108.87	109.23	109.60	11.71	55.02	65.23	11.66	18.63	33.20	3.72	531.19	556.20	584.87	645.05	670.14	695.38	110
109	107.48	107.82	108.17	107.48	107.82	108.17	11.63	53.75	64.04	11.42	19.32	33.74	3.86	524.90	549.63	574.51	639.55	664.28	689.15	109
108	106.12	106.45	106.77	106.12	106.45	106.77	11.57	52.51	62.88	11.19	20.02	34.28	4.02	518.88	543.25	567.78	634.32	658.70	683.22	108
107	104.80	105.10	105.41	104.80	105.10	105.41	11.50	51.30	61.74	10.94	20.72	34.84	4.17	513.11	537.15	561.32	629.37	653.40	677.37	107
106	103.50	103.79	104.48	103.50	103.79	104.08	11.44	50.11	60.64	10.70	21.44	35.40	4.33	507.60	531.30	555.13	624.67	648.37	672.20	106
105	102.24	102.51	102.77	102.24	102.51	102.77	11.39	48.95	59.56	10.46	22.16	35.98	4.49	502.33	525.70	549.20	620.23	643.61	667.10	105
104	101.00	101.25	101.50	101.00	102.25	101.50	11.34	47.81	58.51	10.23	22.88	36.56	4.65	497.30	520.35	543.52	616.04	639.10	662.26	104
103	99.79	100.02	100.25	99.79	100.02	100.25	11.29	46.70	57.48	9.99	23.62	37.16	4.81	492.50	515.24	538.06	612.10	634.83	657.68	103
102	98.60	98.81	99.02	98.60	98.81	99.02	11.25	45.81	56.48	9.76	24.36	37.77	4.98	487.92	510.35	532.88	608.39	630.82	653.34	102
101	97.44	97.63	97.83	97.44	97.63	97.83	11.21	44.54	55.49	9.54	25.10	38.39	5.15	483.57	505.69	527.91	604.91	627.04	649.25	101
100	96.30	96.47	96.65	96.30	96.47	96.65	11.17	43.50	54.54	9.31	25.86	39.02	5.35	479.42	501.26	523.16	601.66	623.49	645.40	100
99	95.18	95.34	95.50	95.18	95.34	95.50	11.14	42.47	53.60	9.09	26.63	39.66	5.50	475.49	497.03	518.64	598.63	620.17	641.78	99
98	94.09	94.23	94.37	94.09	94.23	94.37	11.11	41.46	52.68	8.87	27.41	40.31	5.68	471.77	493.02	514.34	595.83	617.08	638.39	98
97	93.10	93.13	93.26	93.01	93.13	93.26	11.08	40.47	51.78	8.65	28.19	40.98	5.86	468.25	489.22	510.24	593.24	614.21	635.23	97
96	91.96	92.06	92.17	91.96	92.06	92.17	11.06	39.50	50.90	8.44	28.99	41.66	6.04	464.93	485.62	506.36	590.86	611.56	632.29	96
95	90.92	91.01	91.10	90.92	91.01	91.10	11.04	38.64	50.04	8.22	29.79	42.35	6.22	461.80	482.21	502.68	588.70	609.12	629.58	95
94	89.90	89.97	90.04	89.90	89.97	90.04	11.03	37.60	49.20	8.01	30.61	43.05	6.41	458.87	479.02	499.20	586.74	606.89	627.07	94
93	88.90	88.96	89.01	88.90	88.96	89.01	11.02	36.68	48.38	7.80	31.44	43.77	6.60	456.12	476.01	495.91	584.99	604.88	624.79	93
92	87.92	87.96	87.99	87.92	87.96	87.99	11.01	35.77	47.57	7.60	32.28	44.50	6.80	453.57	473.19	492.83	583.45	603.07	622.71	92
91	86.96	86.97	86.99	88.96	88.94	88.93	11.00	34.88	46.78	7.39	33.14	45.24	6.99	451.20	470.56	489.94	586.57	606.29	626.01	91
90	86.00	86.00	86.00	90.00	90.00	90.00	11.00	34.00	46.00	7.19	34.00	46.00	7.19	449.01	468.12	487.23	589.85	609.85	629.85	90
89	85.07	85.05	85.04	91.06	91.07	91.09	11.00	33.14	45.24	6.99	34.88	46.78	7.39	447.01	465.87	484.72	593.33	613.61	633.90	89
88	84.15	84.12	84.08	92.13	92.16	92.20	11.01	32.28	44.50	6.80	35.77	47.57	7.60	445.18	463.80	482.40	597.03	617.58	638.16	88
87	83.24	83.19	83.14	93.22	93.27	93.33	11.02	31.44	43.77	6.60	36.68	48.38	7.80	443.54	461.91	480.26	600.93	621.77	642.64	87
86	83.30	83.37	83.44	94.33	94.40	94.47	11.03	30.61	43.05	6.41	37.60	49.20	8.01	444.20	462.79	481.60	605.04	626.18	647.34	86
85	84.42	84.51	84.59	95.46	95.55	95.64	11.04	29.79	42.35	6.22	38.64	50.04	8.22	447.35	466.32	485.34	609.37	630.80	652.27	85
84	85.55	85.65	85.76	96.61	96.72	96.82	11.06	28.99	41.66	6.04	39.50	50.90	8.44	450.69	469.96	489.27	613.92	635.65	657.42	84
83	86.70	86.82	86.94	97.78	97.90	98.03	11.08	28.19	40.98	5.86	40.47	51.78	8.65	454.22	473.79	493.41	618.70	640.72	662.81	83
82	87.87	88.01	88.15	98.97	99.11	99.26	11.11	27.41	40.31	5.68	41.46	52.68	8.87	457.95	477.82	497.75	623.70	646.03	668.43	82
81	89.05	89.21	89.37	100.19	100.35	100.51	11.14	26.63	39.66	5.50	42.47	53.60	9.09	461.88	482.05	502.30	628.93	651.58	674.30	81
80	90.26	90.44	90.61	101.43	101.61	101.78	11.17	25.86	39.02	5.35	43.50	54.54	9.31	466.00	486.49	507.06	634.40	657.37	680.42	80
79	91.49	91.68	91.88	102.69	102.89	103.08	11.21	25.10	38.39	5.15	44.54	55.49	9.54	470.34	491.15	512.04	640.11	663.40	686.78	79
78	92.74	92.95	93.16	103.96	104.20	104.41	11.25	24.36	37.77	4.98	45.61	56.48	9.76	474.89	496.02	517.24	646.07	669.69	693.41	78
77	94.01	94.24	94.47	105.30	105.53	105.76	11.29	23.62	37.16	4.81	46.70	57.48	9.99	479.66	501.11	522.67	652.78	676.24	700.31	77
76	95.31	95.56	95.81	106.64	106.89	107.14	11.34	22.88	36.56	4.65	47.81	58.51	10.23	484.65	506.44	528.34	658.75	683.06	707.48	76
75	96.63	96.90	97.17	108.02	108.29	108.55	11.39	22.16	35.98	4.49	48.95	59.56	10.46	489.87	511.99	534.24	665.50	690.16	714.94	75
74	97.98	98.26	98.55	109.42	109.71	110.00	11.44	21.44	35.40	4.33	50.11	60.64	10.70	495.32	517.79	540.39	672.52	697.54	722.68	74
73	99.36	99.66	99.97	110.86	111.16	111.47	11.50	20.72	34.84	4.17	51.30	61.74	10.94	501.01	523.84	546.80	679.82	705.21	730.72	73
72	100.76	101.08	101.41	112.33	112.65	112.98	11.57	20.02	34.28	4.02	52.51	62.88	11.18	506.96	530.14	553.47	687.42	713.18	739.08	72
71	102.20	102.54	102.88	113.83	114.17	114.52	11.63	19.32	33.74	3.86	53.75	64.04	11.42	513.16	536.71	560.42	695.32	721.46	747.75	71
70	103.66	104.03	104.39	115.37	115.73	116.10	11.71	18.63	33.20	3.72	55.02	65.23	11.66	519.62	543.55	567.64	703.54	730.07	756.76	70

NOTES:

1. See Standard Drawing E 610-PRAP-02 for Public Road Approach Type A.
2. See Standard Drawing E 610-PRAP-03 for Public Road Approach Type B.
3. If intersection control angle is less than 70° or greater than 110° a special design will be required.

LEGEND:

α = ANGLE OF TURN
The angle through which a vehicle travels on the public road approach toward making a right hand turn. It is measured from the tangent on which a vehicle approaches the intersecting road to the corresponding tangent on the intersecting road to which the vehicle turns.

β = INTERSECTION CONTROL ANGLE

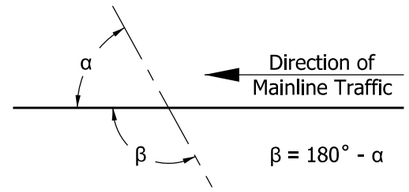

INDIANA DEPARTMENT OF TRANSPORTATION

PUBLIC ROAD APPROACH
TYPE A & TYPE B
TABLE OF VALUES
SEPTEMBER 2026

STANDARD DRAWING NO. E 610-PRAP-04

ELIZABETH P. MOUSER
REGISTERED
No. 10200124
STATE OF INDIANA
PROFESSIONAL ENGINEER

03/02/2026
DESIGN STANDARDS ENGINEER DATE

04/08/2026
CHIEF ENGINEER DATE

NOTES:

(1) Match existing shoulder width. Minimum width is 2 ft.

(2) See Standard Drawing E 610-PRAP-01 for Table A.

(3) See Standard Drawing E 610-PRAP-06 for Table of Values.

(4) See Standard Drawing E 610-PRAP-09 for pay limits details.

(5) The pavement section for the auxiliary lane shall be as detailed elsewhere in the plans.

6. If the AADTT (Trucks Class 4 and above) is greater than 400 on the public road, the required pavement section shall be shown elsewhere in the plans.

(7) The minimum shoulder width should match the existing public road or be 6 ft, which ever is larger.

8. The cross hatch ▨ shoulder area indicates the limits where the shoulder is the same as the approach pavement.

(9) If the existing pavement is asphalt, the transition area shall be the same section as the approach and will be included in the pay limits for HMA for Approaches .

PAY LIMITS (4)

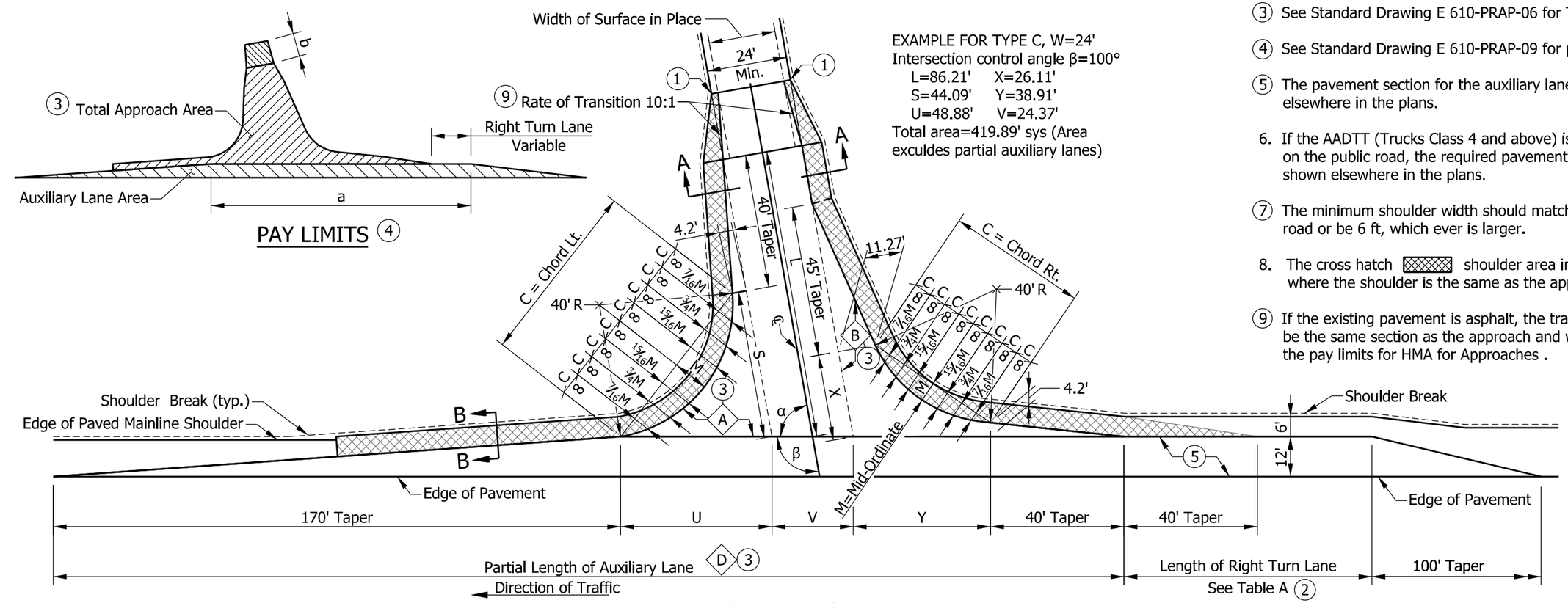

PUBLIC ROAD APPROACH TYPE C

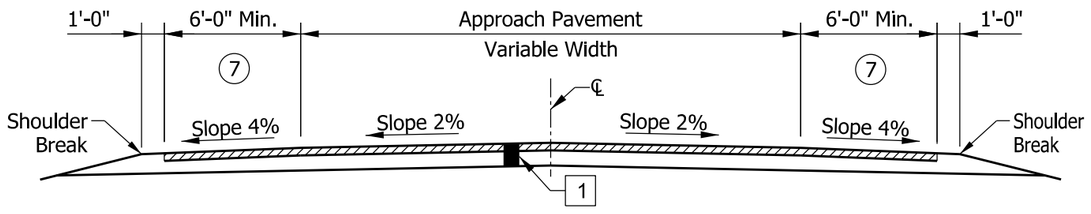

SECTION A-A MINIMUM PAVEMENT SECTION

LEGEND

1 AADTT ≤ 400
HMA for Approaches, Type B, consisting of:
165 lbs/syd HMA Surface, Type B, on
275 lbs/syd HMA Intermediate, Type B, on
660 lbs/syd HMA Base, Type B, on
Subgrade Treatment, Type II (6 in. Coarse Aggr. No. 53) on Geogrid Type IB

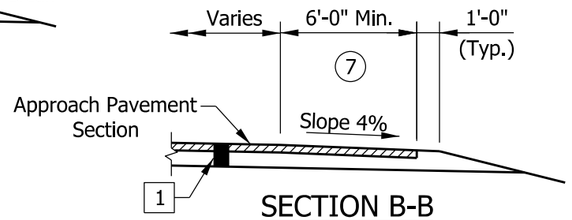

SECTION B-B

INDIANA DEPARTMENT OF TRANSPORTATION

PUBLIC ROAD APPROACH
TYPE C

SEPTEMBER 2026

STANDARD DRAWING NO. E 610-PRAP-05

ELIZABETH P. MOUSER REGISTERED No. 10200124 STATE OF INDIANA PROFESSIONAL ENGINEER

03/02/2026
DESIGN STANDARDS ENGINEER DATE

04/08/2026
CHIEF ENGINEER DATE

β	L	S	U	X	Y	V	Shoulder Gap	Chord		M		Approach Areas			Auxiliary Lane Part. Area	β
								Lt.	Rt.	Lt.	Rt.	A	B	Total	D	
(°)	(ft)	(ft)	(ft)	(ft)	(ft)	(ft)	(ft)	(ft)	(ft)	(ft)	(ft)	(sys)	(sys)	(sys)	(sys)	(°)
110	99.29	54.29	58.51	18.86	33.10	25.54	327.15	61.27	33.78	14.28	3.74	115.63	86.31	466.70	322.87	110
109	99.74	53.17	57.44	19.56	33.64	25.38	326.46	60.82	34.41	14.01	3.89	112.05	88.00	465.28	321.94	109
108	95.97	52.07	56.39	20.26	34.18	25.24	325.81	60.36	35.04	13.75	4.04	108.60	89.73	454.24	321.08	108
107	94.66	50.99	55.37	20.96	34.74	25.10	325.21	59.90	35.66	13.49	4.19	105.27	91.50	449.20	320.27	107
106	93.38	49.94	54.38	21.68	35.30	24.97	324.65	59.44	36.29	13.23	4.35	102.05	93.32	444.39	319.53	106
105	92.13	48.92	53.41	22.40	35.88	24.85	324.13	58.97	36.91	12.97	4.51	98.94	95.17	439.79	318.84	105
104	90.90	47.91	52.46	23.31	36.46	24.73	323.66	58.49	37.52	12.71	4.67	95.89	97.11	435.44	318.21	104
103	89.70	46.93	51.53	23.86	37.06	24.63	323.22	58.01	38.14	12.46	4.84	93.00	99.00	431.22	317.63	103
102	88.51	45.96	50.63	24.60	37.66	24.54	322.83	57.53	38.75	12.21	5.01	91.44	101.00	427.22	317.11	102
101	87.35	45.02	49.74	25.35	38.28	24.45	322.48	57.04	39.36	11.96	5.18	87.44	103.11	423.56	316.63	101
100	86.21	44.09	48.88	26.11	38.91	24.37	322.16	56.55	39.97	11.71	5.35	84.89	105.22	419.89	316.21	100
99	85.09	43.19	48.03	26.88	39.55	24.30	321.88	56.06	40.57	11.46	5.53	82.33	107.33	416.56	315.85	99
98	83.98	42.30	47.20	27.66	40.21	24.24	321.65	55.56	41.17	11.22	5.70	79.89	109.56	413.33	315.53	98
97	82.90	41.42	46.39	28.45	40.87	24.18	321.44	55.05	41.77	10.98	5.88	77.44	111.78	410.33	315.26	97
96	81.83	40.57	45.60	29.24	41.55	24.13	321.28	54.54	42.36	10.74	6.07	75.22	114.11	407.56	315.04	96
95	80.77	39.72	44.82	30.05	42.24	24.09	321.15	54.03	42.95	10.50	6.25	73.00	116.44	404.89	314.87	95
94	79.74	38.90	44.06	30.87	42.94	24.06	321.06	53.51	43.54	10.27	6.44	70.78	118.89	402.33	314.75	94
93	78.71	38.08	43.32	31.70	43.66	24.03	321.01	52.99	44.12	10.03	6.63	68.67	121.44	400.11	314.68	93
92	77.12	37.28	42.58	32.54	44.39	24.01	320.99	52.47	44.70	9.80	6.83	66.67	124.00	396.33	314.65	92
91	78.19	36.50	41.87	33.40	45.13	24.00	321.01	51.94	45.28	9.58	7.02	64.78	126.67	399.89	314.67	91
90	79.26	35.72	41.16	34.26	45.89	24.00	321.06	51.41	45.86	9.35	7.22	62.89	129.44	403.56	314.75	90
89	80.35	34.96	40.48	35.14	46.67	24.00	321.15	50.87	46.43	9.13	7.42	61.00	132.22	407.44	314.86	89
88	81.46	34.21	39.80	36.04	47.46	24.01	321.27	50.33	46.99	8.91	7.63	59.22	135.11	411.56	315.03	88
87	82.58	33.47	39.13	36.95	48.27	24.03	321.44	49.78	47.56	8.69	7.83	57.44	138.00	415.67	315.25	87
86	83.71	32.75	38.48	37.87	49.09	24.06	321.63	49.24	48.11	8.47	8.04	55.78	141.00	420.11	315.51	86
85	84.86	32.03	37.84	38.81	49.93	24.09	321.87	48.68	48.67	8.26	8.25	54.22	144.11	424.67	315.82	85
84	86.03	31.32	37.21	39.77	50.79	24.13	322.14	48.13	49.22	8.05	8.47	52.67	147.44	429.44	316.18	84
83	87.22	30.62	36.60	40.74	51.67	24.18	322.45	47.57	49.77	7.84	8.68	51.11	150.67	434.44	316.60	83
82	88.42	29.93	35.39	41.73	53.48	24.30	322.79	47.00	50.32	7.63	8.90	49.67	154.11	439.47	317.06	82
81	89.64	29.26	35.39	42.74	53.48	24.30	323.18	46.44	50.86	7.43	9.12	48.22	157.56	444.78	317.57	81
80	90.89	28.58	34.81	43.77	54.42	24.37	323.60	45.87	51.39	7.23	9.35	46.78	161.22	450.33	318.13	80
79	92.15	27.92	34.23	44.82	55.38	24.45	324.06	45.29	51.93	7.03	9.57	45.56	164.89	456.11	318.75	79
78	93.44	27.27	33.67	45.89	56.36	24.54	324.56	44.72	52.46	6.83	9.80	44.22	168.67	462.11	319.42	78
77	94.75	26.62	33.11	46.98	57.37	24.63	325.11	44.14	52.98	6.64	10.03	42.89	172.67	468.22	320.14	77
76	96.09	25.98	32.56	48.09	58.39	24.73	325.69	43.55	53.50	6.45	10.26	41.78	176.78	474.67	320.92	76
75	97.45	25.35	32.02	49.23	59.45	24.85	326.32	42.97	54.02	6.26	10.50	40.56	180.89	481.22	321.76	75
74	98.83	24.72	31.50	50.39	60.52	24.97	326.99	42.37	54.53	6.07	10.73	39.44	185.22	488.11	322.65	74
73	100.25	24.10	30.98	51.58	61.63	25.10	327.70	41.78	55.04	5.89	10.97	38.22	189.67	495.22	323.60	73
72	101.70	23.49	30.46	52.80	62.76	25.24	328.46	41.18	55.55	5.71	11.21	37.11	194.22	502.56	324.61	72
71	103.17	22.88	29.96	54.04	63.92	25.38	329.27	40.58	56.05	5.53	11.46	36.11	199.00	510.18	325.69	71
70	104.68	22.28	29.46	55.31	65.12	25.54	330.12	39.98	56.54	5.35	11.70	35.11	203.89	518.11	326.83	70

NOTES:

1. See Standard Drawing E 610-PRAP-05 for Public Road Approach Type C.
2. If intersection control angle is less than 70° or greater than 110° a special design will be required.

LEGEND:

α = ANGLE OF TURN
The angle through which a vehicle travels on the public road approach toward making a right hand turn. It is measured from the tangent on which a vehicle approaches the intersecting road to the corresponding tangent on the intersecting road to which the vehicle turns.

β = INTERSECTION CONTROL ANGLE

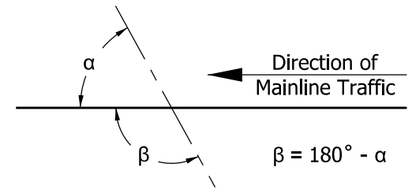

INDIANA DEPARTMENT OF TRANSPORTATION

PUBLIC ROAD APPROACH
TYPE C
TABLE OF VALUES
SEPTEMBER 2026

STANDARD DRAWING NO. E 610-PRAP-06

ELIZABETH P. MOUSER REGISTERED No. 10200124 STATE OF INDIANA PROFESSIONAL ENGINEER

03/02/2026
DESIGN STANDARDS ENGINEER DATE

04/08/2026
CHIEF ENGINEER DATE

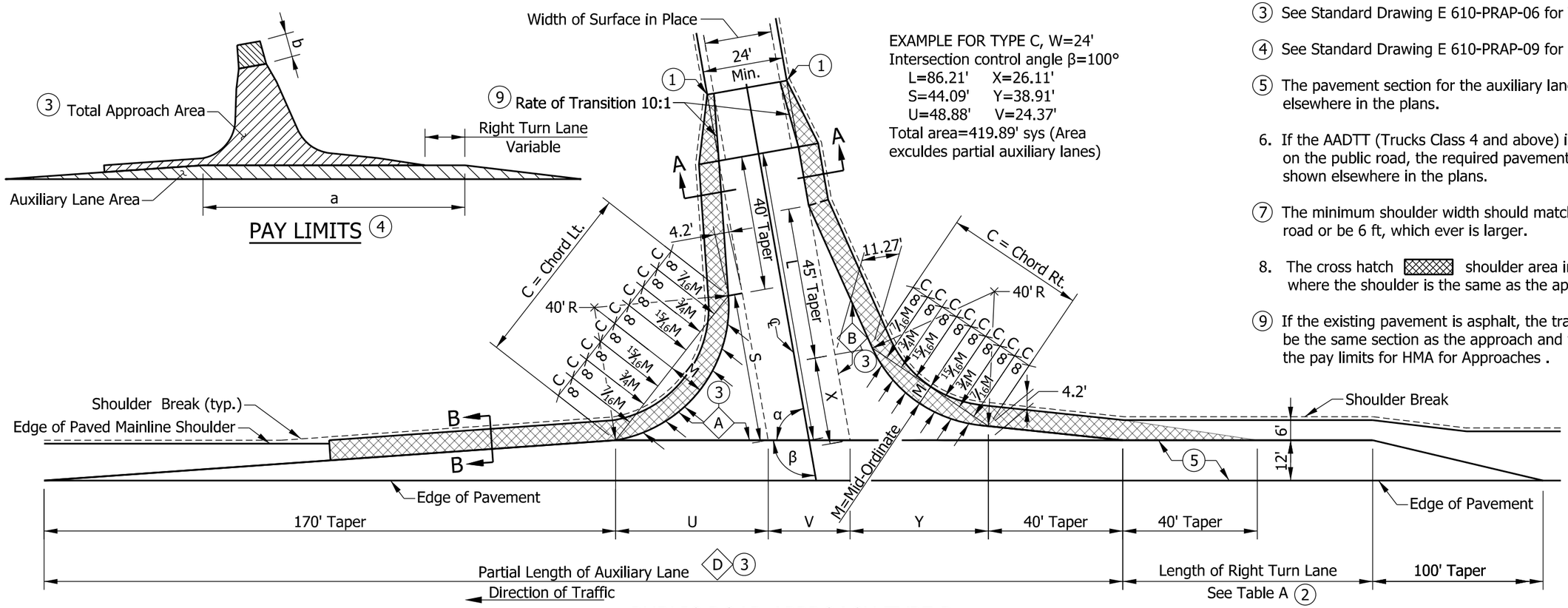

PUBLIC ROAD APPROACH TYPE D

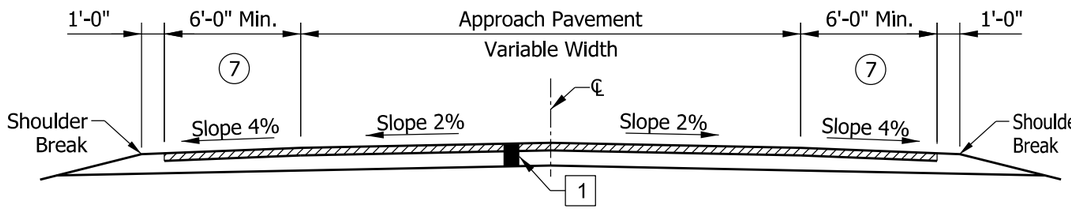

SECTION A-A MINIMUM PAVEMENT SECTION

LEGEND

[1] AADTT ≤ 400
HMA for Approaches, Type B, consisting of:
165 lbs/syd HMA Surface, Type B, on
275 lbs/syd HMA Intermediate, Type B, on
660 lbs/syd HMA Base, Type B, on
Subgrade Treatment, Type II (6 in. Coarse Aggr. No. 53) on
Geogrid Type IB

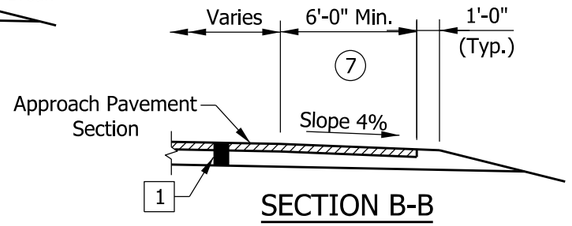

SECTION B-B

NOTES:

(1) Match existing shoulder width. Minimum width is 2 ft.

(2) See Standard Drawing E 610-PRAP-01 for Table A.

(3) See Standard Drawing E 610-PRAP-06 for Table of Values.

(4) See Standard Drawing E 610-PRAP-09 for pay limits details.

(5) The pavement section for the auxiliary lane shall be as detailed elsewhere in the plans.

6. If the AADTT (Trucks Class 4 and above) is greater than 400 on the public road, the required pavement section shall be shown elsewhere in the plans.

(7) The minimum shoulder width should match the existing public road or be 6 ft, which ever is larger.

8. The cross hatch ▨ shoulder area indicates the limits where the shoulder is the same as the approach pavement.

(9) If the existing pavement is asphalt, the transition area shall be the same section as the approach and will be included in the pay limits for HMA for Approaches .

INDIANA DEPARTMENT OF TRANSPORTATION

PUBLIC ROAD APPROACH
TYPE D

SEPTEMBER 2026

STANDARD DRAWING NO. E 610-PRAP-07

ELIZABETH P. MOUSER
REGISTERED
No. 10200124
STATE OF INDIANA
PROFESSIONAL ENGINEER

03/02/2026
DESIGN STANDARDS ENGINEER DATE

04/08/2026
CHIEF ENGINEER DATE

β	L	S	U	X	Y	V	Shoulder Gap	Chord		M		Approach Areas			Auxiliary Lane Part. Area	β
								Lt.	Rt.	Lt.	Rt.	A	B	Total	D	
(°)	(ft)	(ft)	(ft)	(ft)	(ft)	(ft)	(ft)	(ft)	(ft)	(ft)	(ft)	(sys)	(sys)	(sys)	(sys)	(°)
110	109.97	65.61	65.50	25.46	29.21	25.54	320.25	52.66	29.14	9.98	2.75	335.88	174.50	803.64	373.67	110
109	108.40	64.26	64.09	26.22	29.83	25.38	319.31	52.34	29.79	9.75	2.88	329.40	176.97	795.42	372.41	109
108	106.85	62.98	62.72	26.97	30.46	25.24	318.41	51.81	30.43	9.52	3.01	323.11	179.49	787.55	371.22	108
107	105.35	61.68	61.37	27.74	31.11	25.10	317.57	51.27	31.08	9.30	3.14	317.01	182.07	780.00	370.10	107
106	105.08	60.43	60.06	28.52	31.76	24.97	316.78	50.73	31.72	9.07	3.28	311.08	184.70	775.99	369.04	106
105	106.08	59.22	58.77	29.30	32.42	24.85	316.04	50.19	32.36	8.85	3.42	305.33	187.38	775.60	368.06	105
104	107.10	58.03	57.52	30.09	33.10	24.73	315.35	49.65	33.00	8.63	3.56	299.74	190.12	775.45	367.13	104
103	108.12	56.87	56.28	30.89	33.78	24.63	314.70	49.10	33.63	8.42	3.71	294.31	192.92	775.54	366.26	103
102	109.15	55.74	55.08	31.70	34.48	24.54	314.10	48.54	34.26	8.21	3.85	289.03	195.78	775.87	365.46	102
101	110.18	54.63	53.90	32.52	35.19	24.45	313.54	47.99	34.89	8.00	4.01	283.89	198.70	776.42	364.72	101
100	111.23	53.54	52.74	33.35	35.91	24.37	313.02	47.43	35.52	7.79	4.16	278.90	201.68	777.19	364.03	100
99	112.28	52.48	51.61	34.18	36.65	24.30	312.55	46.86	36.14	7.58	4.32	274.04	204.73	778.19	363.40	99
98	113.35	51.45	50.49	35.03	37.39	24.24	312.12	46.30	36.77	7.38	4.47	269.31	207.85	779.42	362.83	98
97	114.42	50.43	49.40	35.89	38.15	24.18	311.73	45.72	37.38	7.18	4.64	264.70	211.04	780.86	362.31	97
96	115.51	49.44	48.33	36.77	38.93	24.13	311.39	45.15	38.00	6.98	4.80	260.21	214.31	782.53	361.85	96
95	116.60	48.46	47.27	37.65	39.71	24.09	311.08	44.57	38.61	6.78	4.97	255.84	217.65	784.42	361.44	95
94	117.71	47.51	46.24	38.55	40.52	24.06	310.82	43.99	39.22	6.59	5.14	251.58	221.01	786.54	361.09	94
93	118.83	46.57	45.22	39.46	41.33	24.03	310.59	43.41	39.83	6.40	5.31	247.43	224.56	788.87	360.79	93
92	119.96	45.66	44.22	40.38	42.17	24.01	310.40	42.82	40.43	6.21	5.48	243.38	228.15	791.43	360.54	92
91	121.11	44.76	43.24	41.32	43.01	24.00	310.26	42.23	41.03	6.03	5.66	239.43	231.82	794.21	360.34	91
90	122.27	43.88	42.27	42.27	43.88	24.00	310.15	41.63	41.63	5.84	5.84	235.58	235.58	797.21	360.20	90
89	123.45	43.01	41.32	43.24	44.76	24.00	310.08	41.03	42.23	5.66	6.03	231.82	239.43	800.44	360.11	89
88	124.64	42.17	40.38	44.22	45.66	24.01	310.06	40.43	42.82	5.48	6.21	228.15	243.38	803.90	360.07	88
87	125.85	41.33	39.46	45.22	46.57	24.03	310.07	39.83	43.41	5.31	6.40	224.56	247.38	807.60	360.09	87
86	127.08	40.52	38.55	46.24	47.51	24.06	310.12	39.22	43.99	5.14	6.59	221.06	251.56	811.52	360.16	86
85	128.32	39.71	37.65	47.27	48.46	24.09	310.21	38.61	44.57	4.97	6.78	217.65	255.84	815.69	360.28	85
84	129.59	38.93	36.77	48.33	49.44	24.13	310.34	38.00	45.15	4.80	6.98	214.31	260.21	820.09	360.45	84
83	130.87	38.15	35.89	49.40	50.43	24.18	310.51	37.38	45.72	4.64	7.18	211.04	264.70	824.74	360.67	83
82	132.18	37.39	35.03	50.49	51.45	24.24	310.72	36.77	46.30	4.47	7.38	207.85	269.31	829.64	360.95	82
81	133.51	36.65	34.18	51.61	52.48	24.30	310.97	36.14	46.86	4.32	7.58	204.73	274.04	834.79	361.29	81
80	134.86	35.91	33.35	52.74	53.54	24.37	311.26	35.52	47.43	4.16	7.79	201.68	278.90	840.20	361.68	80
79	136.23	35.19	32.52	53.90	54.63	24.45	311.59	34.89	47.99	4.01	8.00	198.70	283.89	845.87	362.12	79
78	137.63	34.48	31.70	55.08	55.74	24.54	311.97	34.26	48.54	3.85	8.21	195.78	289.03	851.82	362.63	78
77	139.06	33.78	30.89	56.28	56.87	24.63	312.39	33.63	49.10	3.71	8.42	192.92	294.31	858.04	363.19	77
76	140.51	33.10	30.09	57.52	58.03	24.73	312.85	33.00	49.65	3.56	8.63	190.12	299.74	864.55	363.80	76
75	141.99	32.42	29.30	58.77	59.22	24.85	313.36	32.36	50.19	3.42	8.85	187.38	305.33	871.35	364.48	75
74	143.50	31.76	28.52	60.06	60.43	24.97	313.92	31.72	50.73	3.28	9.07	184.70	311.08	878.44	365.22	74
73	145.04	31.11	27.74	61.37	61.68	25.10	313.92	31.08	51.27	3.14	9.30	182.07	317.01	885.85	366.02	73
72	146.61	30.46	26.97	62.72	62.96	25.24	315.17	30.43	51.81	3.01	9.52	179.49	323.11	893.57	366.89	72
71	148.22	29.83	26.22	64.09	64.26	25.38	315.86	29.79	52.34	2.88	9.75	176.97	329.40	901.63	367.82	71
70	149.87	29.21	25.46	65.50	65.61	25.54	316.61	29.14	52.86	2.75	9.99	174.50	335.88	910.02	368.81	70

NOTES:

1. See Standard Drawing E 610-PRAP-07 for Public Road Approach Type D.
2. If intersection control angle is less than 70° or greater than 110° a special design will be required.

LEGEND:

α = ANGLE OF TURN
The angle through which a vehicle travels on the public road approach toward making a right hand turn. It is measured from the tangent on which a vehicle approaches the intersecting road to the corresponding tangent on the intersecting road to which the vehicle turns.

β = INTERSECTION CONTROL ANGLE

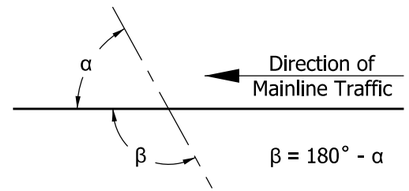

INDIANA DEPARTMENT OF TRANSPORTATION

PUBLIC ROAD APPROACH
TYPE D
TABLE OF VALUES
SEPTEMBER 2026

STANDARD DRAWING NO. E 610-PRAP-08

ELIZABETH P. MOUSER REGISTERED No. 10200124 STATE OF INDIANA PROFESSIONAL ENGINEER

DESIGN STANDARDS ENGINEER — DATE 03/02/2026

CHIEF ENGINEER — DATE 04/08/2026

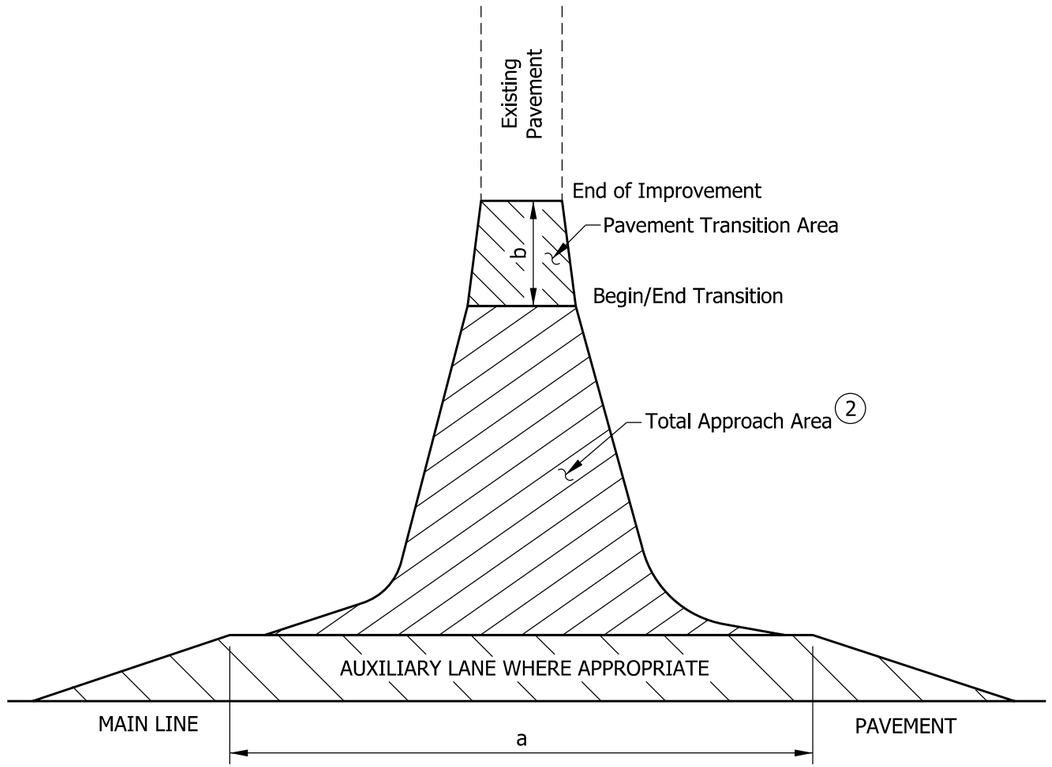

NOTES:

1. The pay limits shown hereon generally apply to Types A, B, C and D Public Road Approaches as shown on Standard Drawings E 610-PRAP-02, -03, -05 and -07 respectively.

(2) See Tables of Values on Standard Drawings E 610- PRAP-04, -06 and -08.

LEGEND

b < 100 ft, HMA or PCCP for Approaches
b ≥ 100 ft, QC/QA-HMA, QC/QA-PCCP or PCCP

HMA or PCCP for Approaches

a < 100 ft, HMA or PCCP for Approaches
a ≥ 100 ft, QC/QA-HMA, QC/QA-PCCP or PCCP

INDIANA DEPARTMENT OF TRANSPORTATION

PUBLIC ROAD APPROACH PAY LIMIT DETAILS

SEPTEMBER 2026

STANDARD DRAWING NO. E 610-PRAP-09

ELIZABETH P. MOUSER
REGISTERED
No. 10200124
STATE OF INDIANA
PROFESSIONAL ENGINEER

03/02/2026
DESIGN STANDARDS ENGINEER — DATE

04/08/2026
CHIEF ENGINEER — DATE

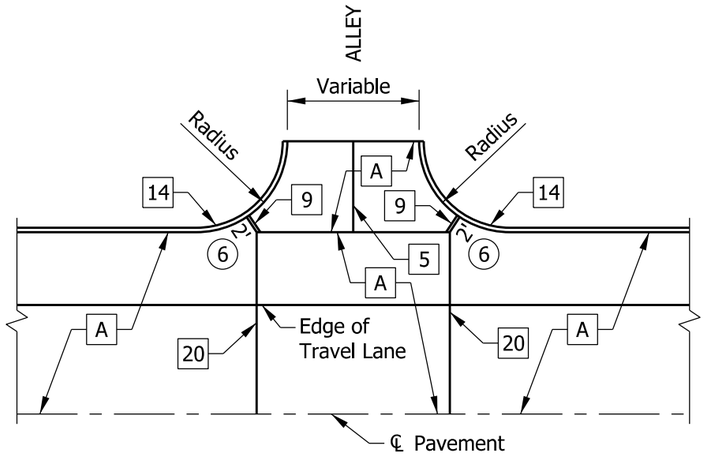

ALLEY APPROACH
WITH PCCP MAINLINE PAVEMENT

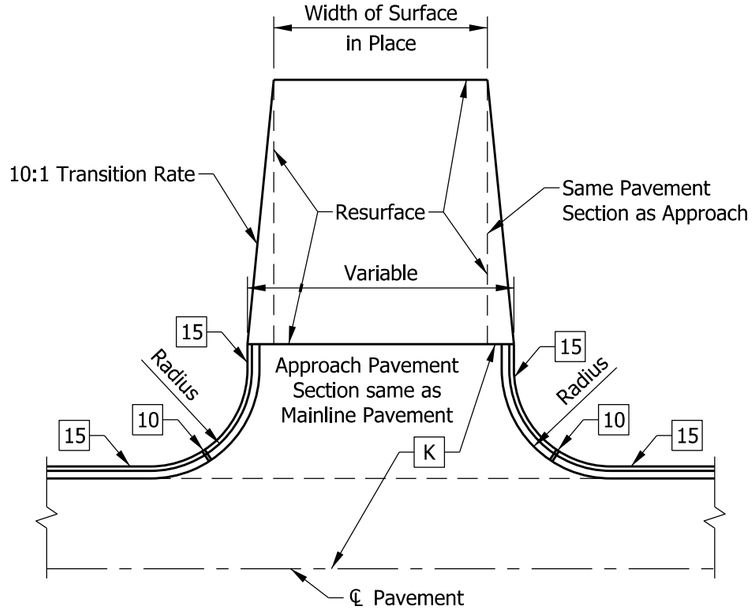

STREET OR ALLEY APPROACH
WITH HMA MAINLINE PAVEMENT

NOTES:

1. Radii of 25 ft at minor cross streets shall be provided where space permits.
2. Radii of 30 ft or more at major cross streets where WB-15 trucks and or buses turn repeatedly.
3. Radii of 40 ft or more at major cross streets shall be provided where WB-40 trucks and buses repeatedly turn.
4. Provide radii of 60 ft or more at the intersection of two State or U.S. highways and streets servicing heavy industrial areas requiring repeated turns by the Indiana Design Vehicle.
5. Radius of 10 ft min. to 20 ft min. for alley approaches shall be provided where space permits.

(6) Ear Construction Type B. See Standard Drawing E 605-ERCN-01.

7. For Approaches with PCCP Pavement, see Standard Drawing series E 503-CCPJ for joint details.
8. For PCCP Approaches, if approach length is more than 15 ft, then the D-1 Contraction Joints are required in the transverse direction. Spacing shall be 1/2 the length of the approach or 15 ft max.

LEGEND

[A] PCCP	[10] 1/2 in. Preformed Joint Filler
[K] HMA Pavement	[14] Integral Concrete Curb
[5] Longitudinal Joint	[15] Combined Curb and Gutter
[9] 1 in. Preformed Joint Filler	[20] Contraction Joint

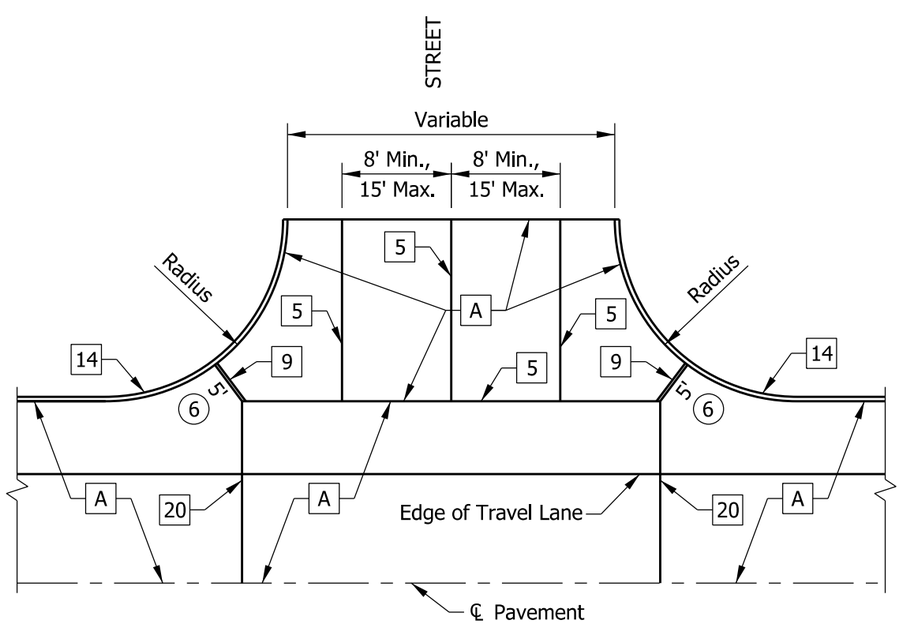

STREET APPROACH
WITH PCCP MAINLINE PAVEMENT

INDIANA DEPARTMENT OF TRANSPORTATION

STREET OR ALLEY APPROACH
PCCP OR HMA
MAINLINE PAVEMENT
SEPTEMBER 2026

STANDARD DRAWING NO. E 610-PRAP-10

ELIZABETH P. MOUSER
REGISTERED
No.
10200124
STATE OF
INDIANA
PROFESSIONAL ENGINEER

03/02/2026
DESIGN STANDARDS ENGINEER DATE

04/08/2026
CHIEF ENGINEER DATE

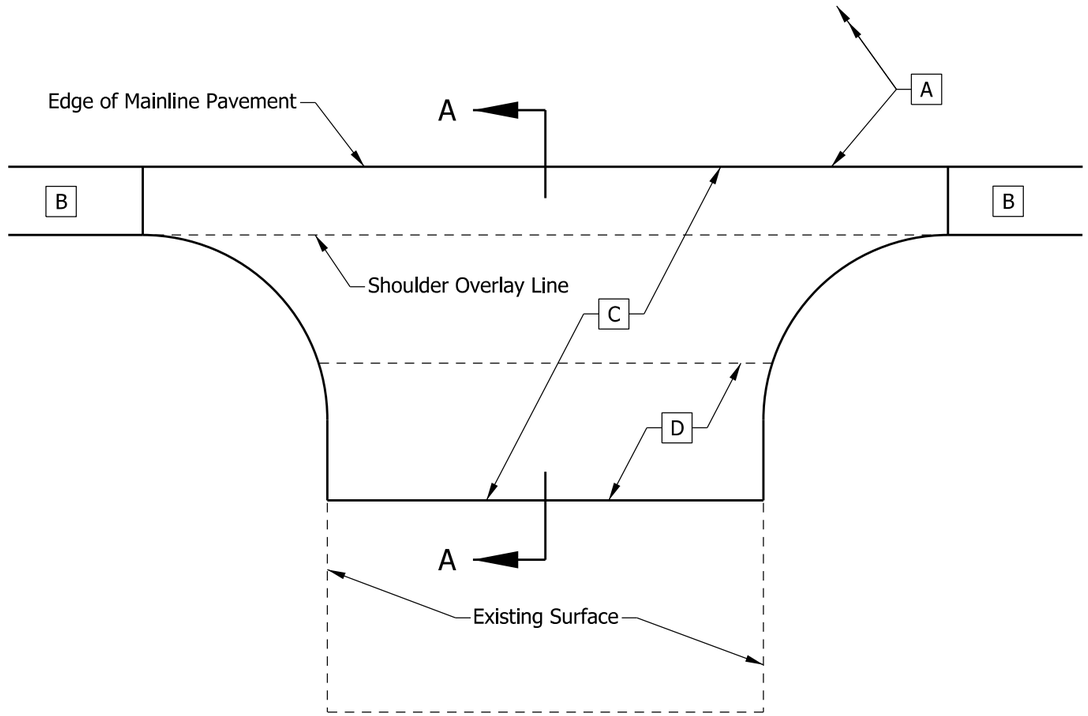

PLAN

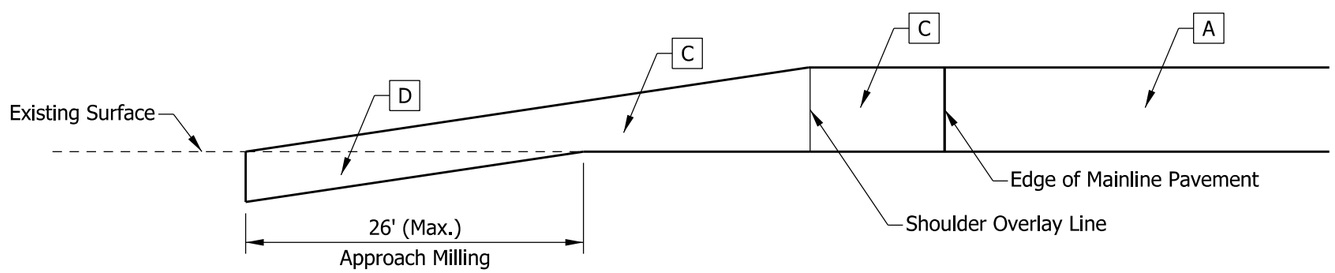

SECTION A-A

LEGEND

- A — Typical HMA Overlay, Mainline
- B — Typical HMA Overlay, Shoulder
- C — HMA for Approaches
- D — Approach Milling

INDIANA DEPARTMENT OF TRANSPORTATION

PUBLIC ROAD APPROACH OVERLAY PAVING TRANSITION

SEPTEMBER 2026

STANDARD DRAWING NO. E 610-PRAP-11

ELIZABETH P. MOUSER
REGISTERED
No. 10200124
STATE OF INDIANA
PROFESSIONAL ENGINEER

Elizabeth P Mouser 03/02/2026
DESIGN STANDARDS ENGINEER DATE

04/08/2026
CHIEF ENGINEER DATE

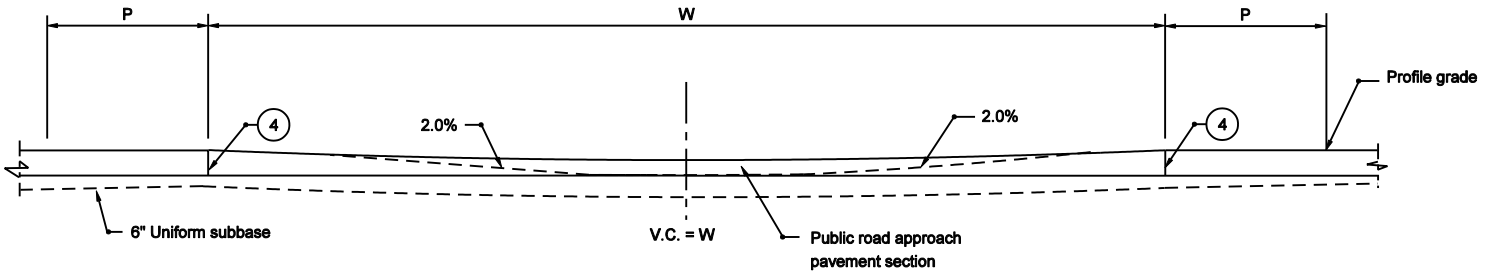

SECTION A-A

LEGEND

(3) Construction joint type D-1. See Standard Drawing E 503-CCPJ-01 for details.

(4) Longitudinal keyway joint, if pavement is PCCP. See Standard Drawing E 503-CCPJ-04 for details.

(8) Longitudinal contraction joint. See Standard Drawings E 503-CCPJ-07 AND -08 for details.

(9) 1" preformed joint filler

(10) Ear construction type A. See Standard Drawing E 605-ERCN-01 for details.

(11) Ear construction type B. See Standard Drawing E 605-ERCN-02 for details.

(14) Integral concrete curb

L = Minimum longitudinal length of crossover

P = Travel lane or turn lane width

W = Width of median

V.C. = Vertical curve length

= Stabilized shoulder

GENERAL NOTES :

1. The crossover length L is based on a 90° road intersection.
2. PCCP crossover shall be constructed if the cross road approach is concrete HMA crossover shall be constructed if the cross road approach asphalt.
3. See Standard Drawings E 610-PRCO-01A through -07 for crossover plans.

INDIANA DEPARTMENT OF TRANSPORTATION

PUBLIC ROAD CROSSOVER SECTION

MARCH 2003

STANDARD DRAWING NO. E 610-PRCO-01

ANTHONY L. UREMOVICH REGISTERED No. 18095 STATE OF INDIANA PROFESSIONAL ENGINEER

DESIGN STANDARDS ENGINEER

/s/ Anthony L.Uremovich 3-03-03
DESIGN STANDARDS ENGINEER DATE

/s/ Richard K.Smutzer 3-03-03
CHIEF HIGHWAY ENGINEER DATE

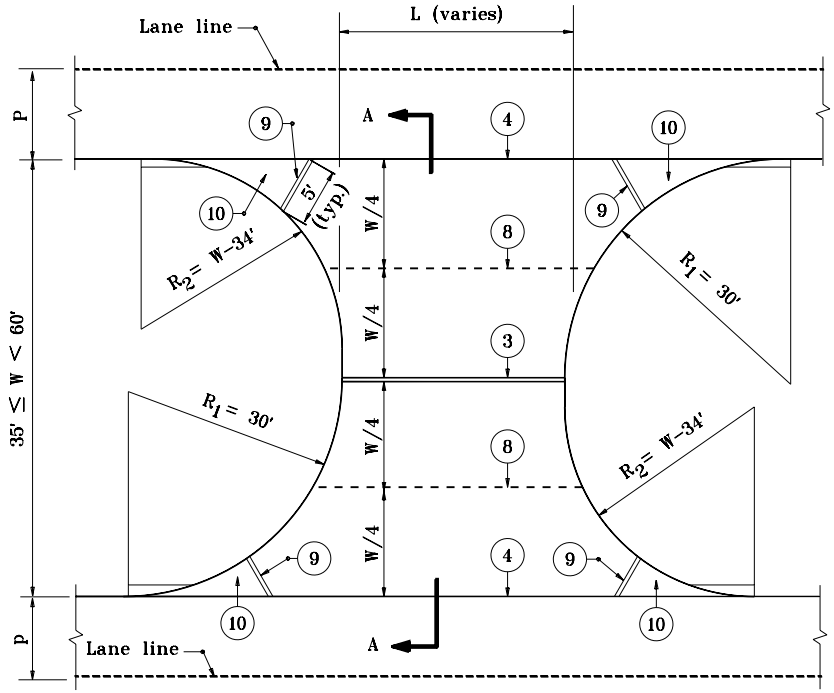

CROSSOVER PLAN FOR MEDIAN WIDTH OF 35 ft OR GREATER BUT LESS THAN 60 ft

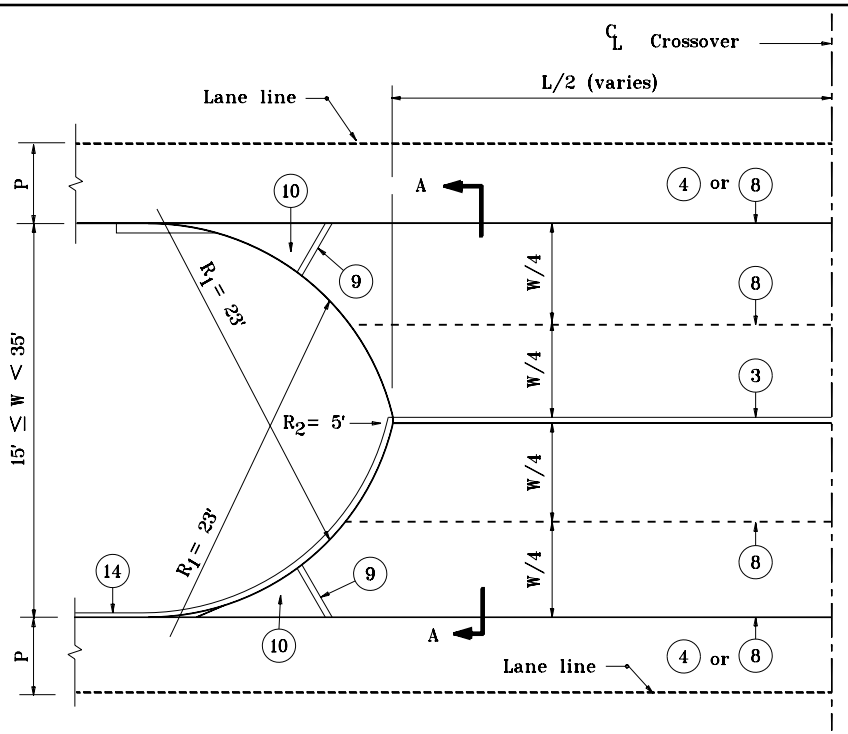

CROSSOVER PLAN FOR MEDIAN WIDTH OF 15 ft OR GREATER BUT LESS THAN 35 ft

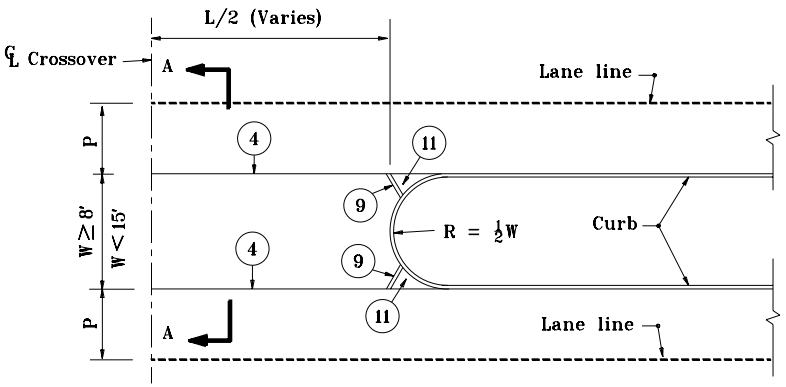

CROSSOVER PLAN FOR MEDIAN WIDTH OF 8 ft OR GREATER BUT LESS THAN 15 ft

NOTES :

1. For median width W of 60' or greater, R = 30'.
2. For median width W of less than 8', L = 100' min.
3. See Standard Drawing E 610-PRCO-01 for Legend and Section A-A.

(8) Use construction joint in place of keyway joint if W is 32' or more.

INDIANA DEPARTMENT OF TRANSPORTATION

PUBLIC ROAD CROSSOVER PLANS

MAY 2000

STANDARD DRAWING NO. **E 610-PRCO-01A**

ANTHONY L. UREMOVICH REGISTERED No. 18095 STATE OF INDIANA PROFESSIONAL ENGINEER

DESIGN STANDARDS ENGINEER

/s/ Anthony L. Uremovich 5-01-00
DESIGN STANDARDS ENGINEER — DATE

/s/ Firooz Zandi 5-01-00
CHIEF HIGHWAY ENGINEER — DATE

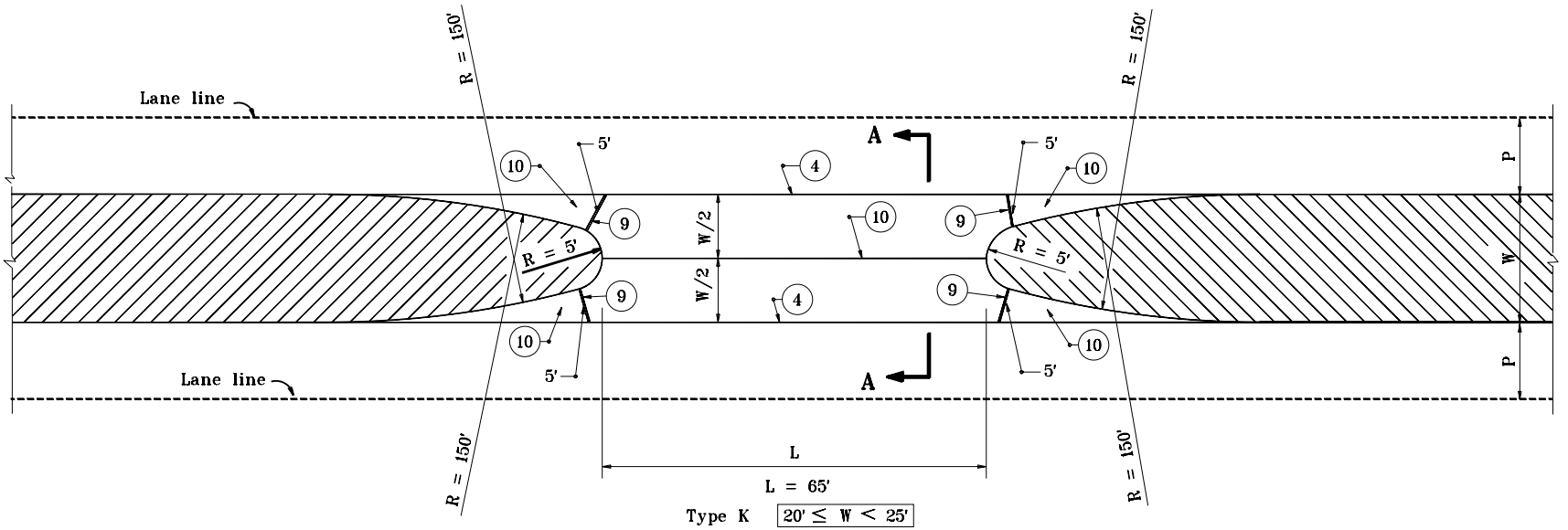

PLAN

NOTES :

1. See Standard Drawing E 610-PRCO-01 for Legend and Section A-A.

INDIANA DEPARTMENT OF TRANSPORTATION

PUBLIC ROAD CROSSOVERS TYPE K & L

MAY 2000

STANDARD DRAWING NO. **E 610-PRCO-02**

ANTHONY L. UREMOVICH REGISTERED No. 18095 STATE OF INDIANA PROFESSIONAL ENGINEER

DESIGN STANDARDS ENGINEER

/s/ Anthony L. Uremovich 5-01-00
DESIGN STANDARDS ENGINEER — DATE

/s/ Firooz Zandi 5-01-00
CHIEF HIGHWAY ENGINEER — DATE

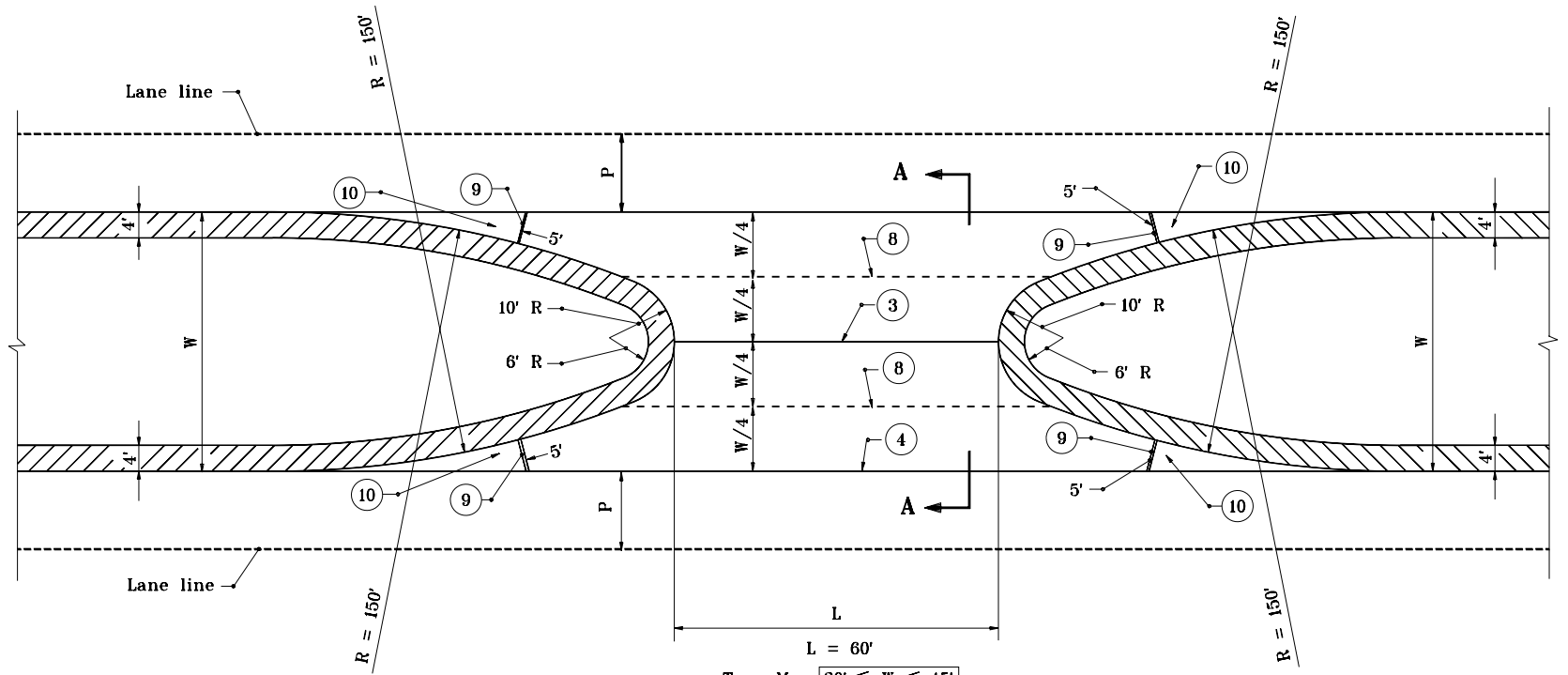

PLAN

NOTES :

1. See Standard Drawing E 610-PRCO-01 for Legend and Section A-A.

INDIANA DEPARTMENT OF TRANSPORTATION

PUBLIC ROAD CROSSOVERS TYPE M & N

MAY 2000

STANDARD DRAWING NO. **E 610-PRCO-03**

ANTHONY L. UREMOVICH REGISTERED No. 18095 STATE OF INDIANA PROFESSIONAL ENGINEER

DESIGN STANDARDS ENGINEER

/s/ Anthony L. Uremovich 5-01-00
DESIGN STANDARDS ENGINEER — DATE

/s/ Firooz Zandi 5-01-00
CHIEF HIGHWAY ENGINEER — DATE

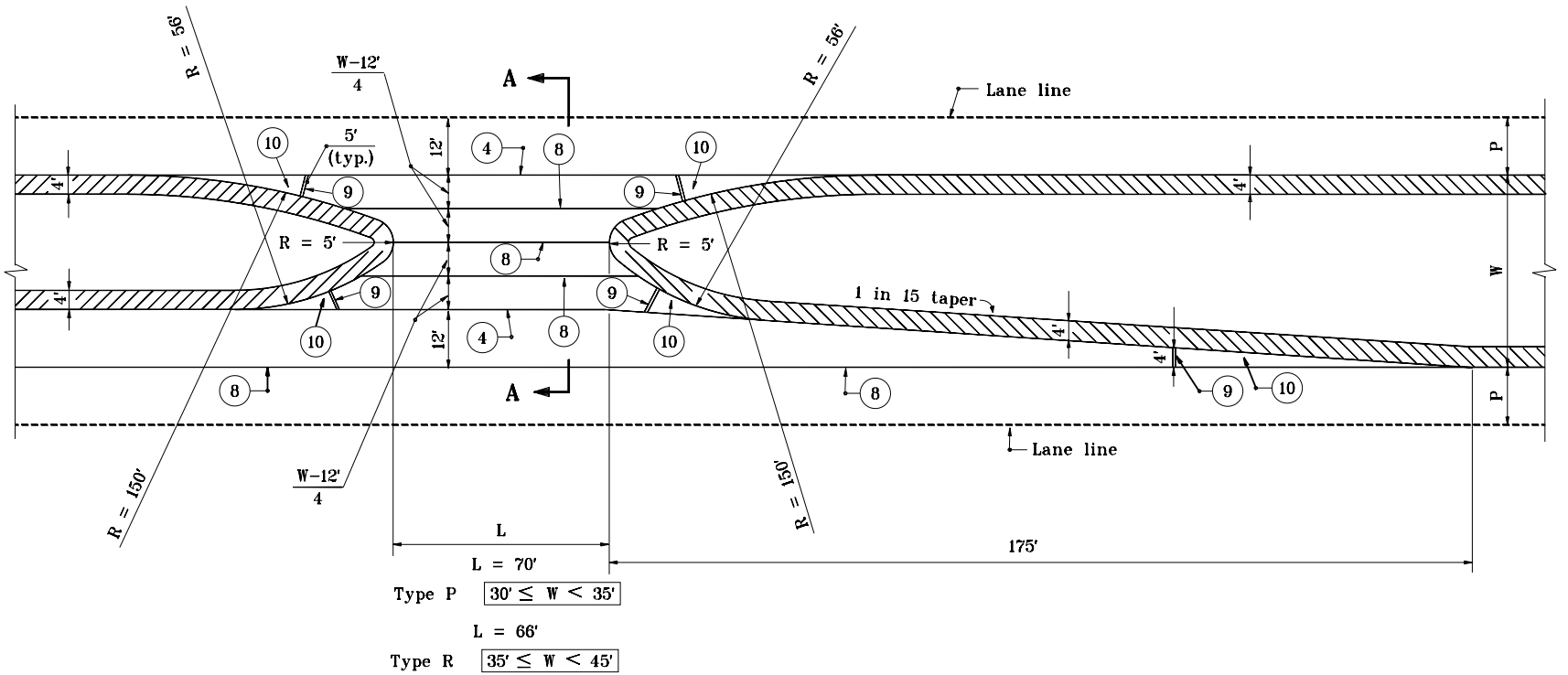

L = 70'

Type P $30' \leq W < 35'$

L = 66'

Type R $35' \leq W < 45'$

PLAN

NOTES :

1. See Standard Drawing E 610-PRCO-01 for Legend and Section A-A.

INDIANA DEPARTMENT OF TRANSPORTATION

PUBLIC ROAD CROSSOVERS TYPE P & R

MAY 2000

STANDARD DRAWING NO. **E 610-PRCO-04**

ANTHONY L. UREMOVICH REGISTERED No. 18095 STATE OF INDIANA PROFESSIONAL ENGINEER

DESIGN STANDARDS ENGINEER

/s/ Anthony L. Uremovich 5-01-00
DESIGN STANDARDS ENGINEER — DATE

/s/ Firooz Zandi 5-01-00
CHIEF HIGHWAY ENGINEER — DATE

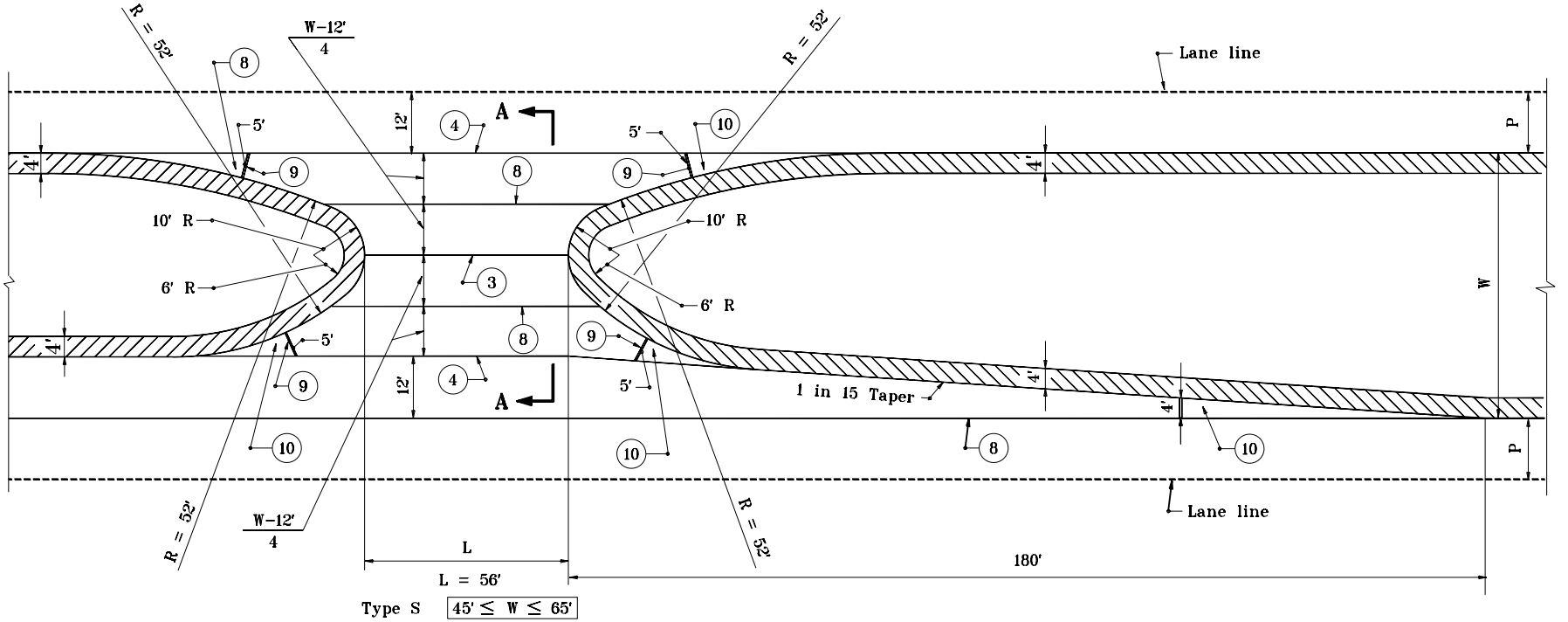

PLAN

NOTES :

1. See Standard Drawing E 610-PRCO-01 for Legend and Section A-A.

INDIANA DEPARTMENT OF TRANSPORTATION

PUBLIC ROAD CROSSOVER TYPE S

MAY 2000

STANDARD DRAWING NO. **E 610-PRCO-05**

ANTHONY L. UREMOVICH REGISTERED No. 18095 STATE OF INDIANA PROFESSIONAL ENGINEER

DESIGN STANDARDS ENGINEER

/s/ Anthony L. Uremovich 5-01-00
DESIGN STANDARDS ENGINEER — DATE

/s/ Firooz Zandi 5-01-00
CHIEF HIGHWAY ENGINEER — DATE

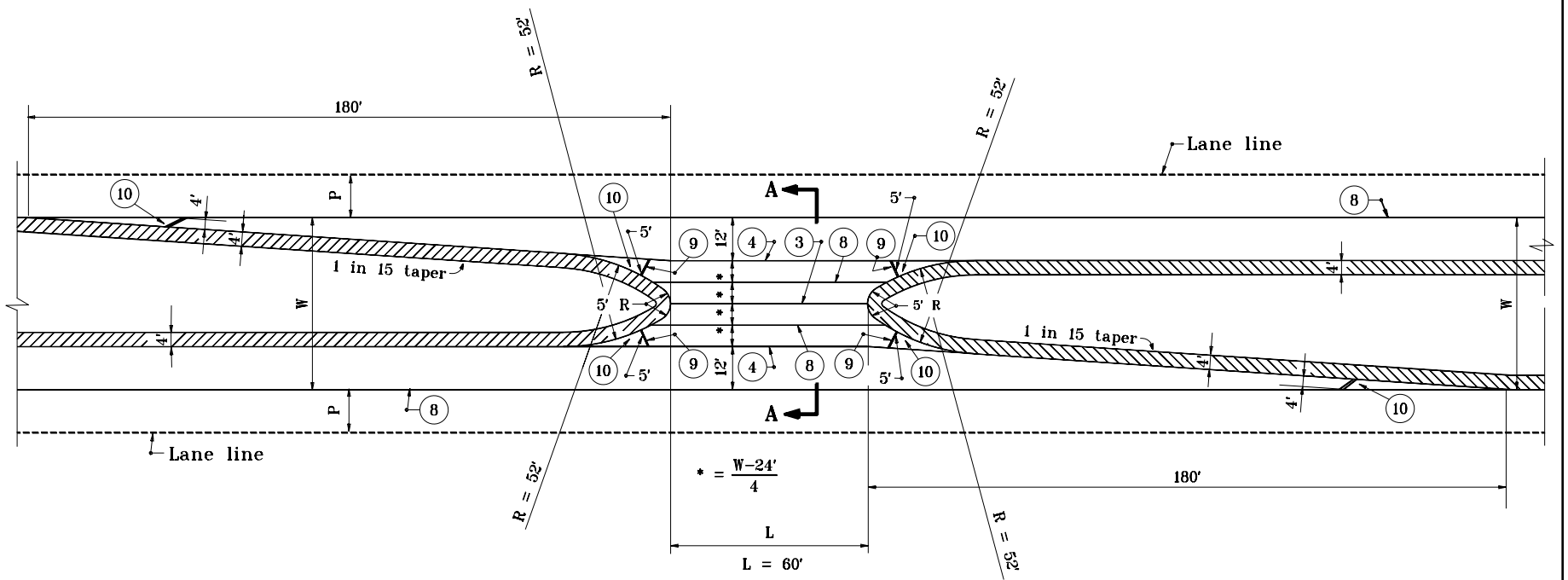

PLAN

NOTES :

1. See Standard Drawing E 610-PRCO-01 for Legend and Section A-A .

INDIANA DEPARTMENT OF TRANSPORTATION

PUBLIC ROAD CROSSOVERS TYPE T & U

MAY 2000

STANDARD DRAWING NO. **E 610-PRCO-06**

ANTHONY L. UREMOVICH REGISTERED No. 18095 STATE OF INDIANA PROFESSIONAL ENGINEER

DESIGN STANDARDS ENGINEER

/s/ Anthony L. Uremovich 5-01-00
DESIGN STANDARDS ENGINEER — DATE

/s/ Firooz Zandi 5-01-00
CHIEF HIGHWAY ENGINEER — DATE

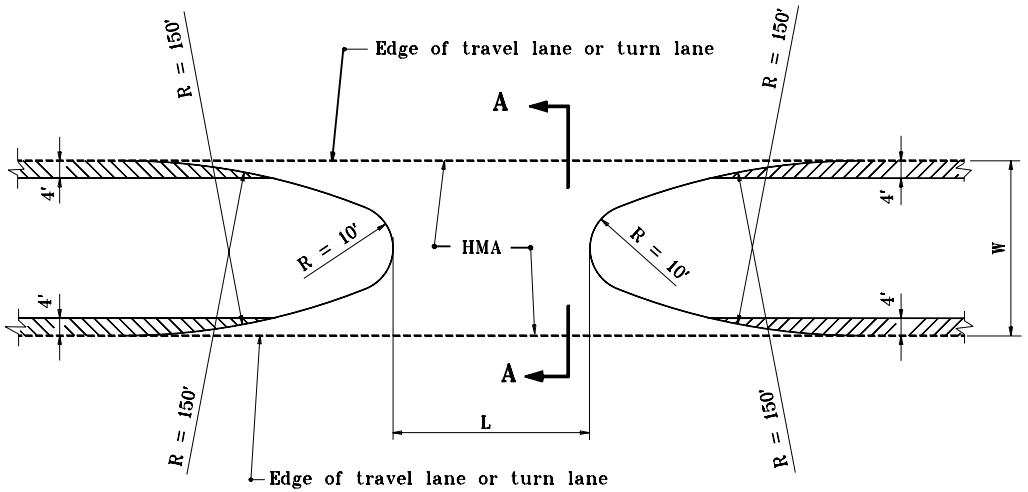

PLAN

NOTES :

1. Plan dimensions for HMA pavement crossover shall be as shown for PCCP on Standard Drawings E 610-PRCO-01A through -07.

2. See Standard Drawing E 610-PRCO-01 for Legend and Section A-A.

INDIANA DEPARTMENT OF TRANSPORTATION

PUBLIC ROAD CROSSOVER PLAN FOR HMA PAVEMENT

MAY 2000

STANDARD DRAWING NO. **E 610-PRCO-07**

ANTHONY L. UREMOVICH REGISTERED No. 18095 STATE OF INDIANA PROFESSIONAL ENGINEER

DESIGN STANDARDS ENGINEER

/s/ Anthony L. Uremovich 5-01-00
DESIGN STANDARDS ENGINEER — DATE

/s/ Firooz Zandi 5-01-00
CHIEF HIGHWAY ENGINEER — DATE

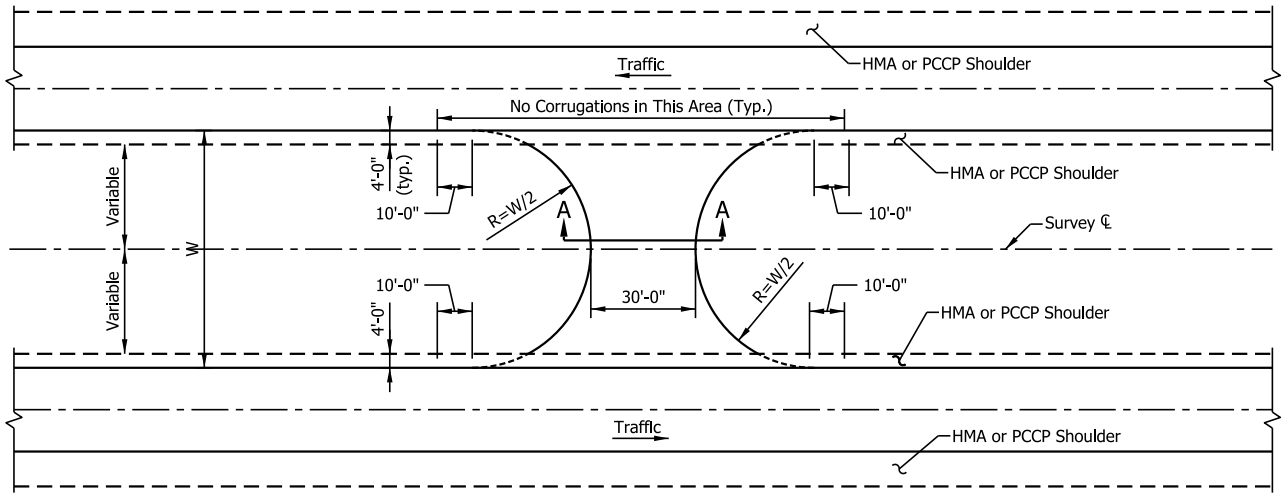

PLAN

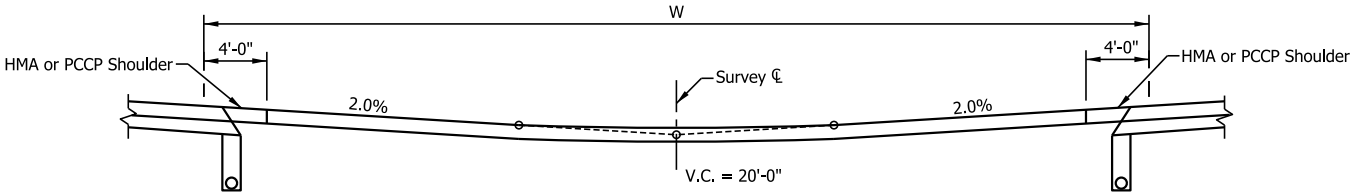

GRADE OF U-TURN MEDIAN OPENING

Vertical Scale Exaggerated for Clarity

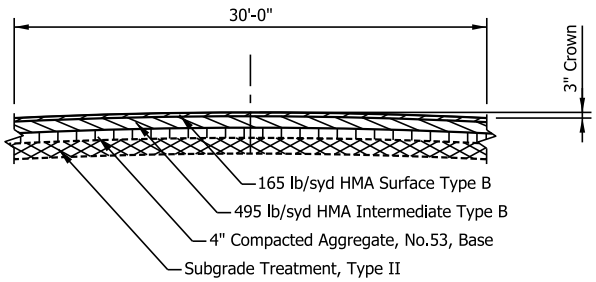

SECTION A-A

Vertical Scale Exaggerated for Clarity

INDIANA DEPARTMENT OF TRANSPORTATION

U-TURN MEDIAN OPENING

SEPTEMBER 2017

STANDARD DRAWING NO. E 610-UTMO-01

ELIZABETH W. PHILLIPS REGISTERED No. 10200124 STATE OF INDIANA PROFESSIONAL ENGINEER

/s/ Elizabeth W. Phillips 04/27/17

DESIGN STANDARDS ENGINEER DATE

/s/ John Leckie 04/28/17

CHIEF ENGINEER DATE

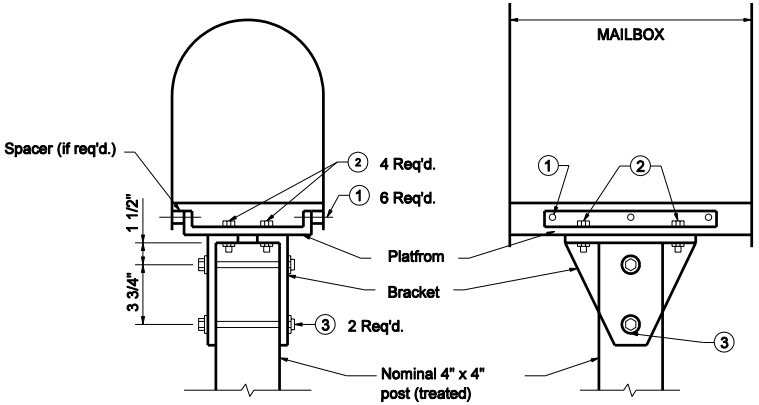

WITH WOOD POST

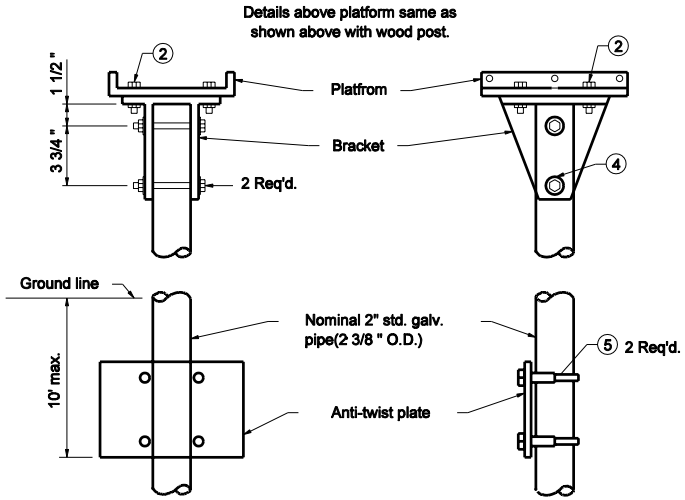

WITH PIPE POST

LEGEND

1. #8-32 x "L" truss head machine screw with two #8 flat washers, #8 lock washers, and #8 hex nut.
2. 5/16"-18 x 3/4" hex cap screw with two 5/16" flat washers, 5/16" lock washer and 5/16" hex nut.
3. 5/16"-18 x 4 1/2" hex cap screw with two 5/16" flat washers, 5/16" lock washer, and 5/16" hex nut.
4. 5/16"-18 x 3" hex cap screw with two 5/16" flat washers, 5/16" lock washer, and 5/16" hex nut.
5. Nominal 2 3/4" muffler clamp
6. For platfrom, bracket, shelf, spacer and anti-twist plate details, see Standard Drawing E 611-MBAS-03.

INDIANA DEPARTMENT OF TRANSPORTATION

SINGLE MAILBOX ASSEMBLY

MARCH 2005

STANDARD DRAWING NO. E 611-MBAS-01

RICHARD L. VanCLEAVE REGISTERED No. 9750 STATE OF INDIANA PROFESSIONAL ENGINEER

DESIGN STANDARDS ENGINEER

/s/ Richard L.VanCleave 3-01-05
DESIGN STANDARDS ENGINEER DATE

/s/ Richard K.Smutzer 3-01-05
CHIEF HIGHWAY ENGINEER DATE

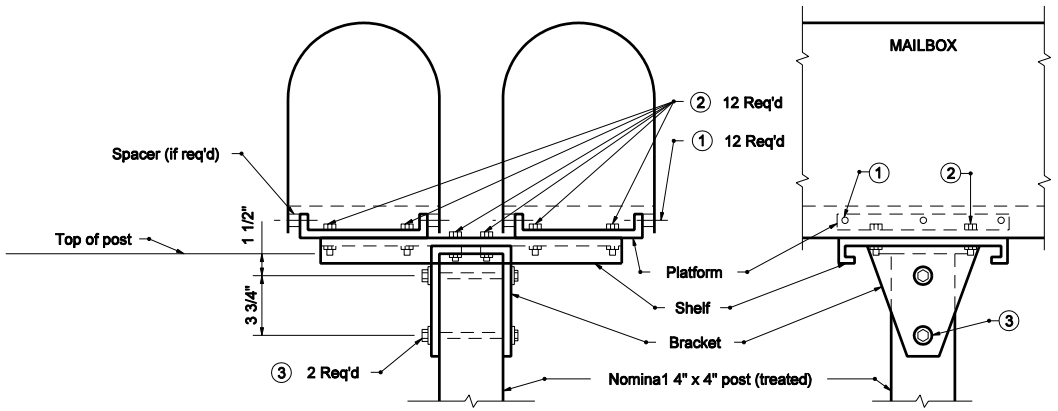

WITH WOOD POST

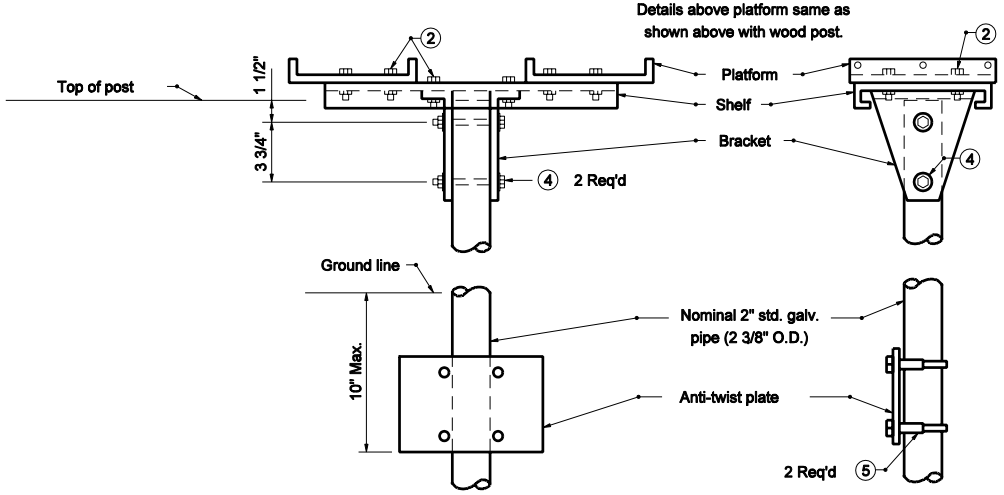

WITH PIPE POST

LEGEND

① #8-32 x "L" truss head machine screw with two #8 flat washers, #8 lock washers, and #8 hex nut.

② 5/16"-18 x 3/4" hex cap screw with two 5/16" flat washers, 5/16" lock washer and 5/16" hex nut.

③ 5/16"-18 x 4 1/2" hex cap screw with two 5/16" flat washers, 5/16" lock washer, and 5/16" hex nut.

④ 5/16"-18 x 3" hex cap screw with two 5/16" flat washers, 5/16" lock washer, and 5/16" hex nut.

⑤ Nominal 2 3/4" muffler clamp

⑥ For platfrom, bracket, shelf, spacer and anti-twist plate details, see Standard Drawing E 611-MBAS-03.

INDIANA DEPARTMENT OF TRANSPORTATION

DOUBLE MAILBOX ASSEMBLY

MARCH 2005

STANDARD DRAWING NO. E 611-MBAS-02

RICHARD L. VanCLEAVE REGISTERED No. 9750 STATE OF INDIANA PROFESSIONAL ENGINEER

DESIGN STANDARDS ENGINEER

/s/ Richard L.VanCleave 3-01-05
DESIGN STANDARDS ENGINEER DATE

/s/ Richard K.Smutzer 3-01-05
CHIEF HIGHWAY ENGINEER DATE

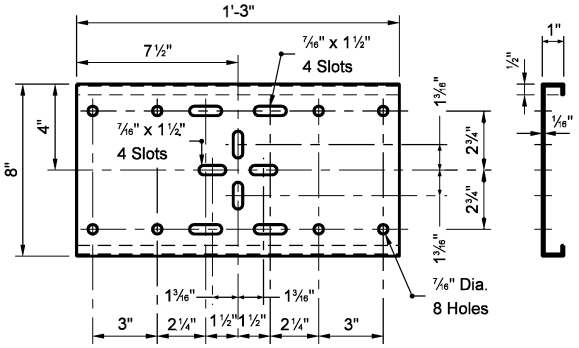

SHELF

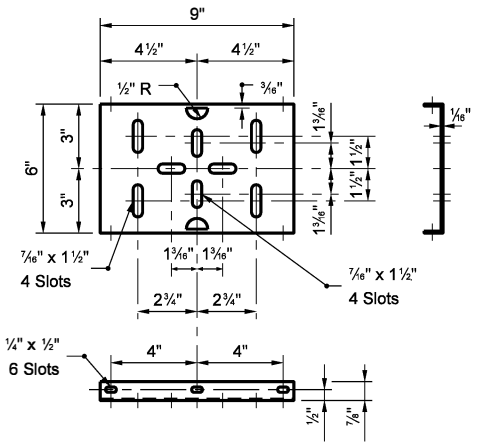

PLATFORM

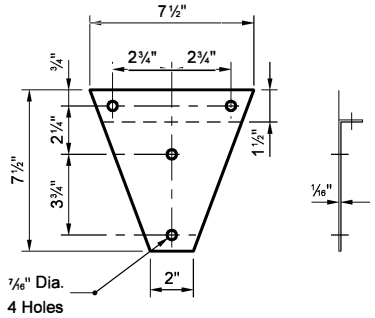

BRACKET

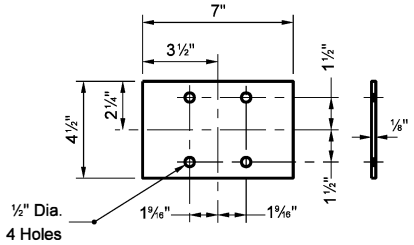

ANTI-TWIST PLATE

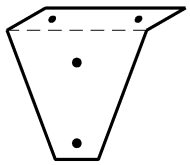

FINISHED BRACKET
ISOMETRIC

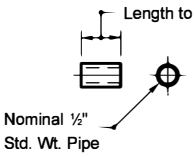

SPACER

INDIANA DEPARTMENT OF TRANSPORTATION

MAILBOX SUPPORT HARDWARE

MARCH 2005

STANDARD DRAWING NO. E 611-MBAS-03

RICHARD L. VanCLEAVE REGISTERED No. 9750 STATE OF INDIANA PROFESSIONAL ENGINEER

DESIGN STANDARDS ENGINEER

/s/ Richard L. VanCleave 3-01-05
DESIGN STANDARDS ENGINEER DATE

/s/ Richard K. Smutzer 3-01-05
CHIEF HIGHWAY ENGINEER DATE

GENERAL NOTES

(2) See plans for W

(5) The normal height range is 3'-3 to 3'-11. Contact the local postmaster to establish appropriate installation height.

(6) Established by the U.S. Postal Service, usually 3'-4 to 4'-0.

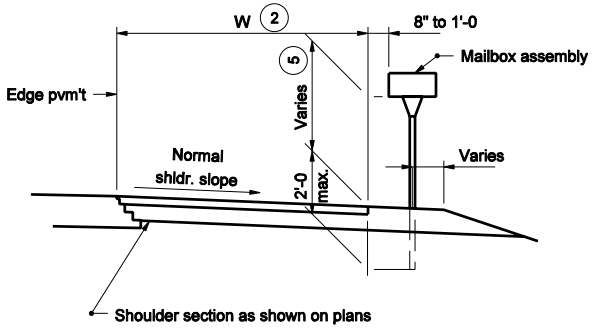

NORMAL SHOULDER SECTION

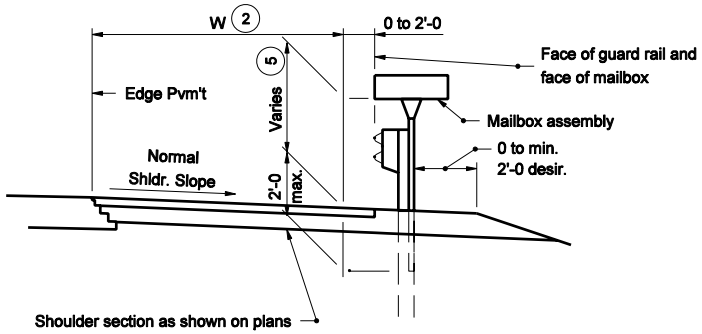

SHOULDER SECTION WITH GUARDRAIL

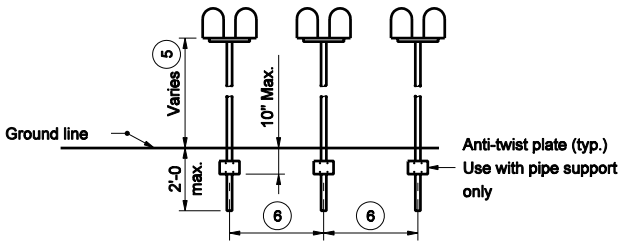

SPACING FOR MULTIPLE POST INSTALLATION

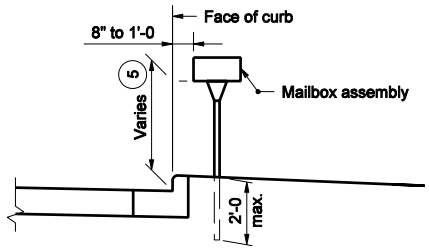

CURBED SECTION

INDIANA DEPARTMENT OF TRANSPORTATION

MAILBOX ASSEMBIES ELEVATION VIEW

MARCH 2005

STANDARD DRAWING NO. E 611-MBAS-04

RICHARD L. VanCLEAVE REGISTERED No. 9750 STATE OF INDIANA PROFESSIONAL ENGINEER

DESIGN STANDARDS ENGINEER

/s/ Richard L. VanCleave 3-01-05
DESIGN STANDARDS ENGINEER DATE

/s/ Richard K. Smutzer 3-01-05
CHIEF HIGHWAY ENGINEER DATE

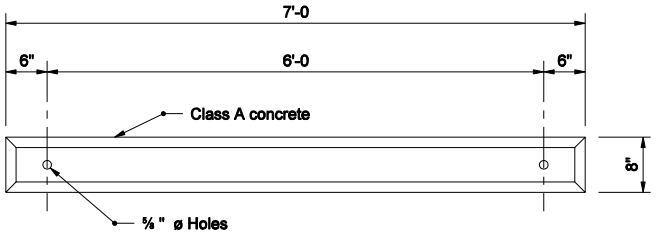

TOP VIEW

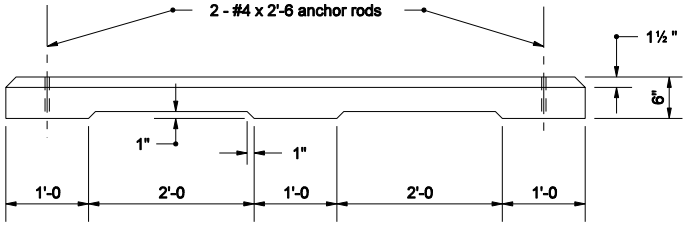

SIDE VIEW

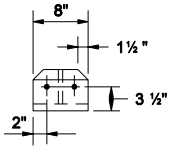

END VIEW

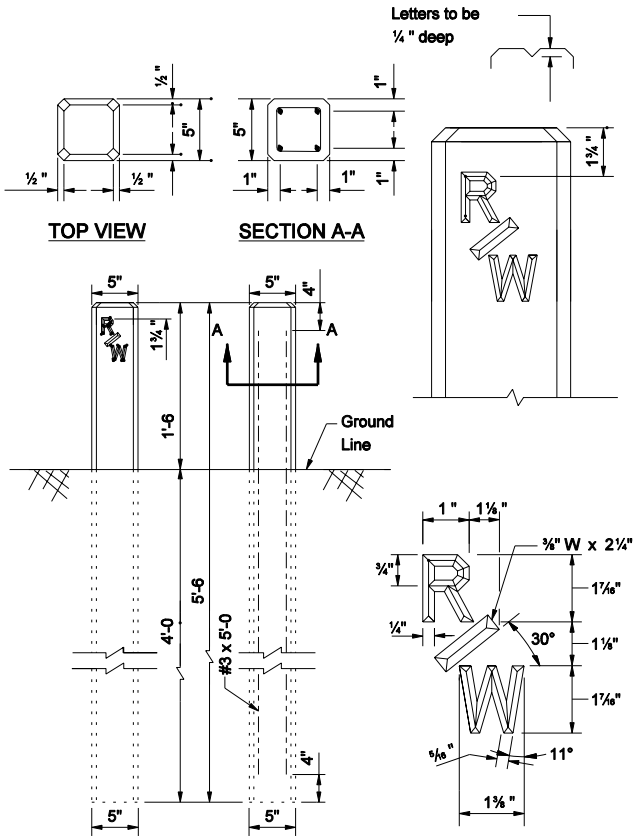

INDIANA DEPARTMENT OF TRANSPORTATION

RIGHT-OF-WAY MARKER AND CONCRETE PARKING BARRIER

MARCH 2004

STANDARD DRAWING NO. E 615-RWPB-01

RICHARD L. VanCLEAVE REGISTERED No. 9750 STATE OF INDIANA PROFESSIONAL ENGINEER

DESIGN STANDARDS ENGINEER

/s/ Richard L. VanCleave X-OX-OX
DESIGN STANDARDS ENGINEER DATE

/s/ Richard K. Smutzer X-OX-OX
CHIEF HIGHWAY ENGINEER DATE

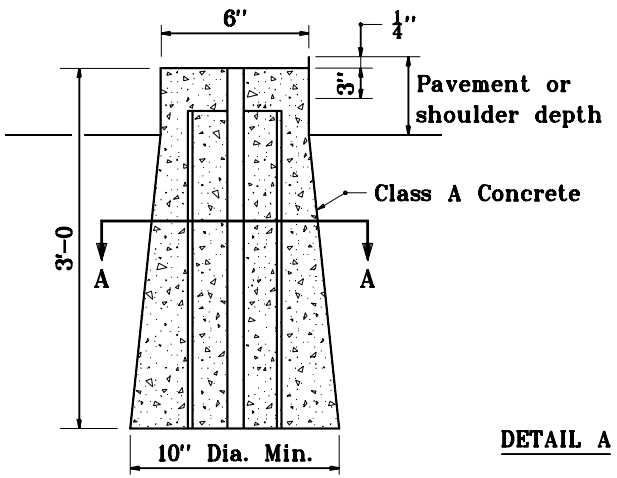

DETAIL A

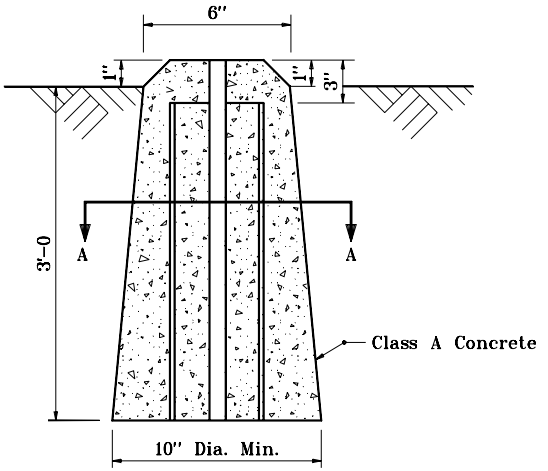

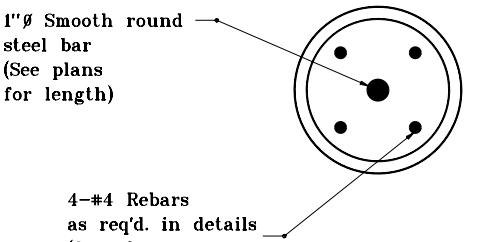

SECTION A-A

INSIDE PAVEMENT OR SHOULDER AREA

OUTSIDE PAVEMENT OR SHOULDER AREA

NEW SECTION CORNER MONUMENT INSTALLATION

NOTES

1. If the existing section corner monument is 0 to 1 ft below surface, it shall be removed and replaced as shown in Detail A.

2. If the existing section corner monument is over 1 ft to 3 ft below surface, the county surveyor shall determine whether it shall remain in place or be replaced. If the monument is to be replaced, the installation shall be as shown in Detail A. If the existing monument is to remain in place, it shall be extended as shown in Detail A.

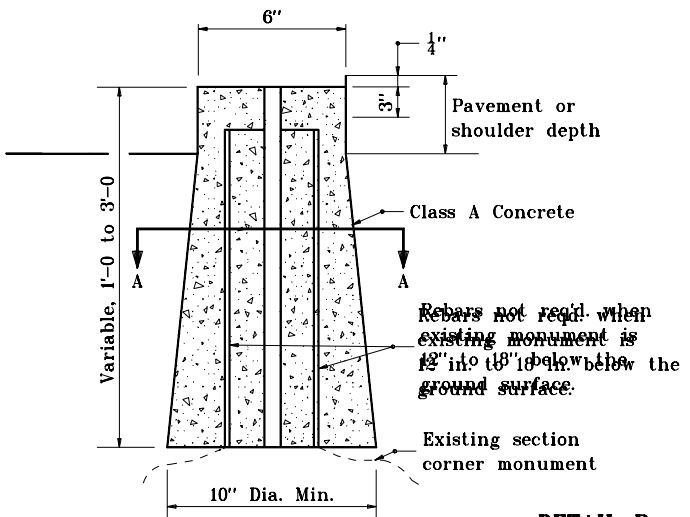

DETAIL B

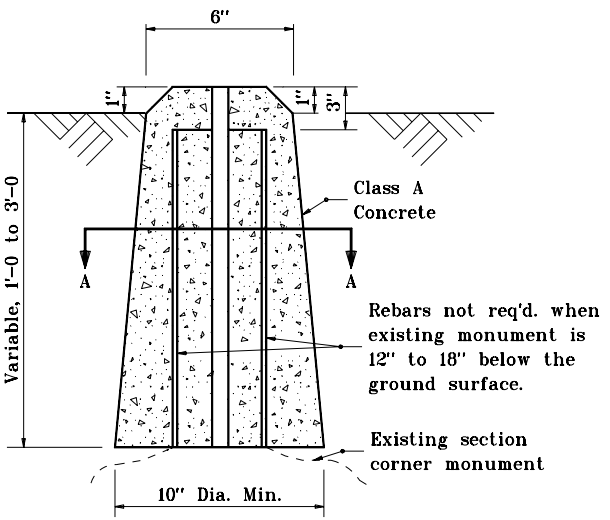

INSIDE PAVEMENT OR SHOULDER AREA

OUTSIDE PAVEMENT OR SHOULDER AREA

EXTENSION OF EXISTING SECTION CORNER MONUMENT

INDIANA DEPARTMENT OF TRANSPORTATION

SECTION CORNER MONUMENTS

APRIL 1995

STANDARD DRAWING NO. **E 615-SCMN-01**

ANTHONY L. URENOVICH REGISTERED No. 18095 STATE OF INDIANA PROFESSIONAL ENGINEER

DESIGN STANDARDS ENGINEER

DETAILS PLACED IN THIS FORMAT 11-15-99

/s/ Anthony L. Uremovich 11-15-99
DESIGN STANDARDS ENGINEER DATE

/s/ Firooz Zandi 11-15-99
CHIEF HIGHWAY ENGINEER DATE

ORIGINALLY APPROVED 4-03-95

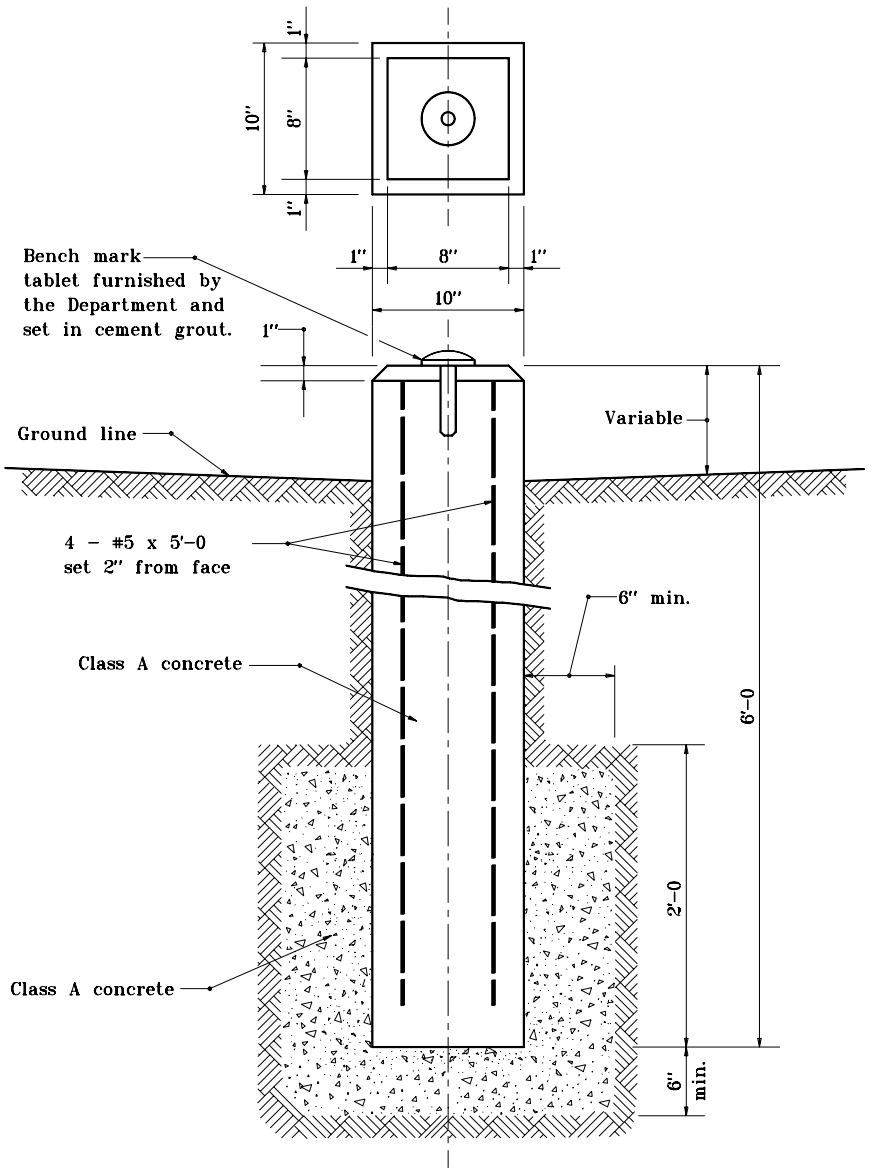

BENCH MARK POST

INDIANA DEPARTMENT OF TRANSPORTATION

BENCH MARK POST

SEPTEMBER 1997

STANDARD DRAWING NO. **E 615-SLBM-01**

ANTHONY L. UREMOVICH REGISTERED No. 18095 STATE OF INDIANA PROFESSIONAL ENGINEER

DESIGN STANDARDS ENGINEER

DETAILS PLACED IN THIS FORMAT	11-15-99
/s/ Anthony L. Uremovich DESIGN STANDARDS ENGINEER	11-15-99 DATE
/s/ Firooz Zandi CHIEF HIGHWAY ENGINEER	11-15-99 DATE
ORIGINALLY APPROVED	9-01-97

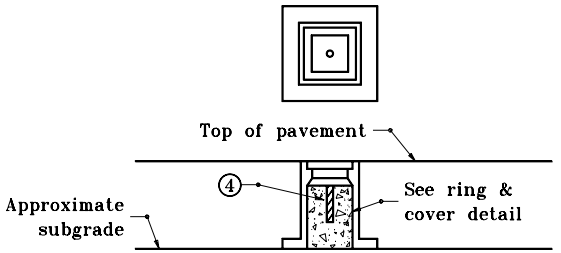

INSTALLATION FOR VITRIFIED BRICK OR BITUMINOUS SURFACE ON CONCRETE BASE (TYPE A)

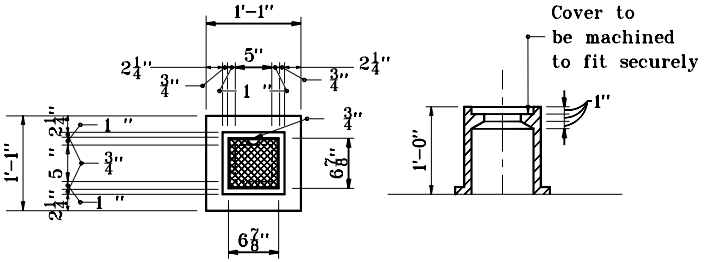

SURVEY LINE MONUMENT RING & COVER

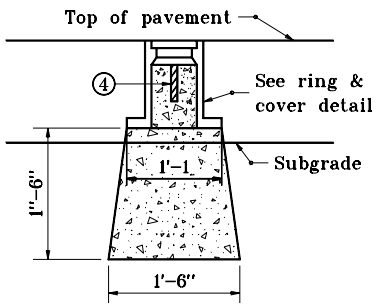

INSTALLATION FOR FLEXIBLE PAVEMENT (TYPE B)

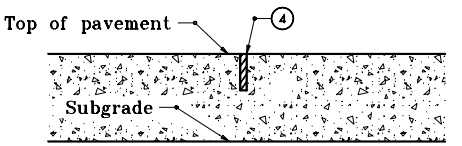

INSTALLATION FOR CONCRETE PAVEMENT (TYPE D)

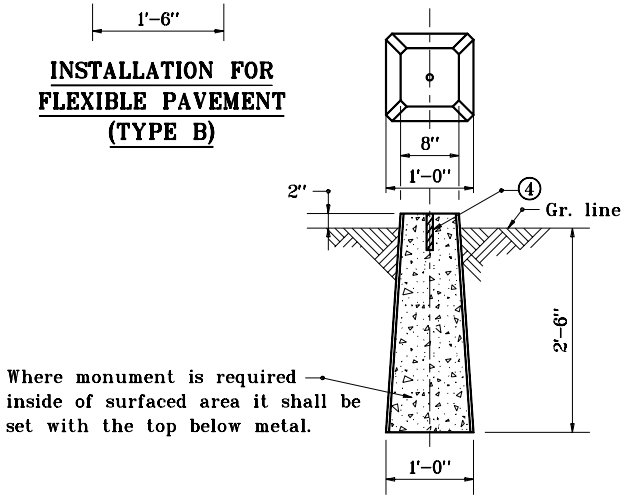

INSTALLATION OUTSIDE OF PAVEMENT (TYPE C)

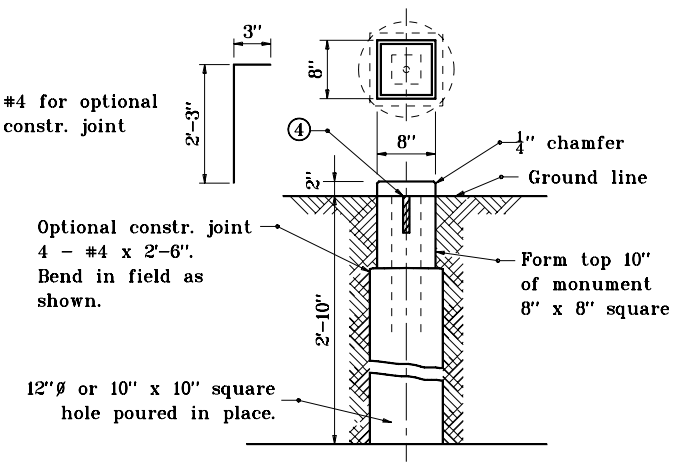

OPTIONAL INSTALLATION FOR TYPE C MONUMENT

GENERAL NOTES

1. Sign shall be white background with black copy.
2. One steel type A or 4" x 4" wood post required.
3. Letter height shall be as follows:
   Border: ½" series D
   Line 1: 1" series B
   Line 2: 1" series B
   Line 3: 1" series B
4. 1"Ø x 5" steel rod

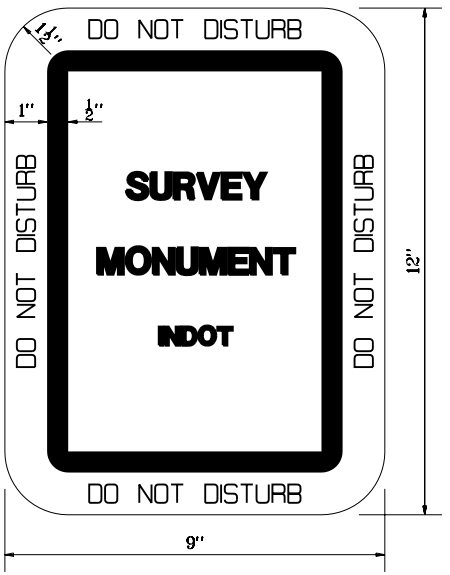

INDIANA DEPARTMENT OF TRANSPORTATION

SURVEY LINE MONUMENTS

SEPTEMBER 1997

STANDARD DRAWING NO. **E 615-SLMN-01**

ANTHONY L. URENOVICH REGISTERED No. 18095 STATE OF INDIANA PROFESSIONAL ENGINEER

DESIGN STANDARDS ENGINEER

DETAILS PLACED IN THIS FORMAT	11-15-99
/s/ Anthony L. Uremovich	11-15-99
DESIGN STANDARDS ENGINEER	DATE
/s/ Firooz Zandi	11-15-99
CHIEF HIGHWAY ENGINEER	DATE
ORIGINALLY APPROVED	9-01-97

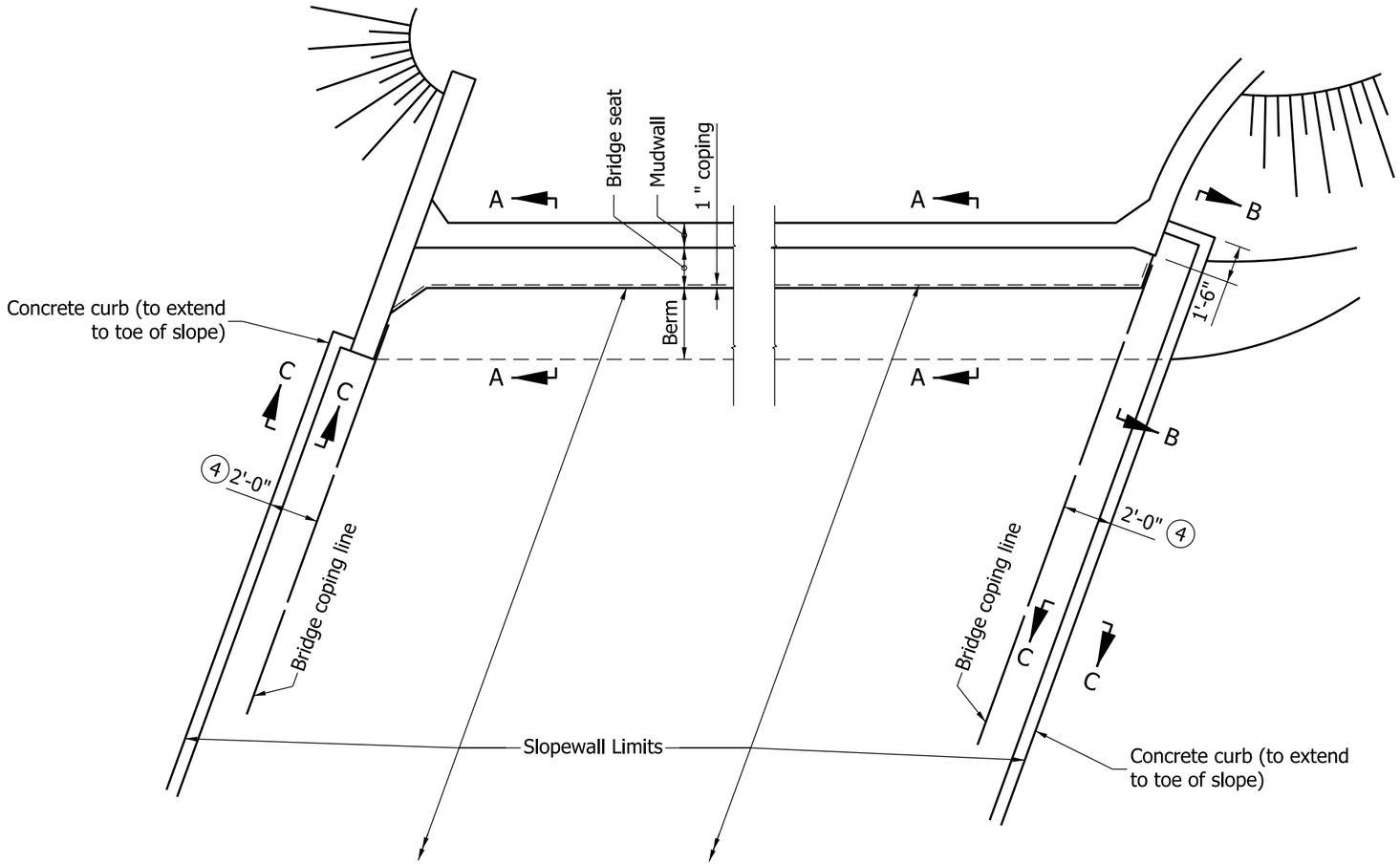

STRAIGHT WINGS

FLARED WINGS

NOTES:

1. See Standard Drawing E 616-SWCO-03 for Sections A-A, B-B, and C-C.
2. When paved slopewall abuts or surrounds columns, piers or other structures, use 1/2" bituminous expansion joint material between slopewall and structure.
3. If slopewall is specified, 1'-0" hand-laid riprap or precast concrete riprap type A may be used.

(4) This dimension shall be increased to 5'-0" where no curb is used on the bridge.

INDIANA DEPARTMENT OF TRANSPORTATION

CONCRETE SLOPEWALL DETAILS

SEPTEMBER 2011

STANDARD DRAWING NO. E 616-SWCO-01

RICHARD L. VanCLEAVE REGISTERED No. 9750 STATE OF INDIANA PROFESSIONAL ENGINEER

DESIGN STANDARDS ENGINEER

/s/ Richard L. VanCleave 9/01/11
DESIGN STANDARDS ENGINEER DATE

/s/ Mark A. Miller 9/01/01
CHIEF HIGHWAY ENGINEER DATE

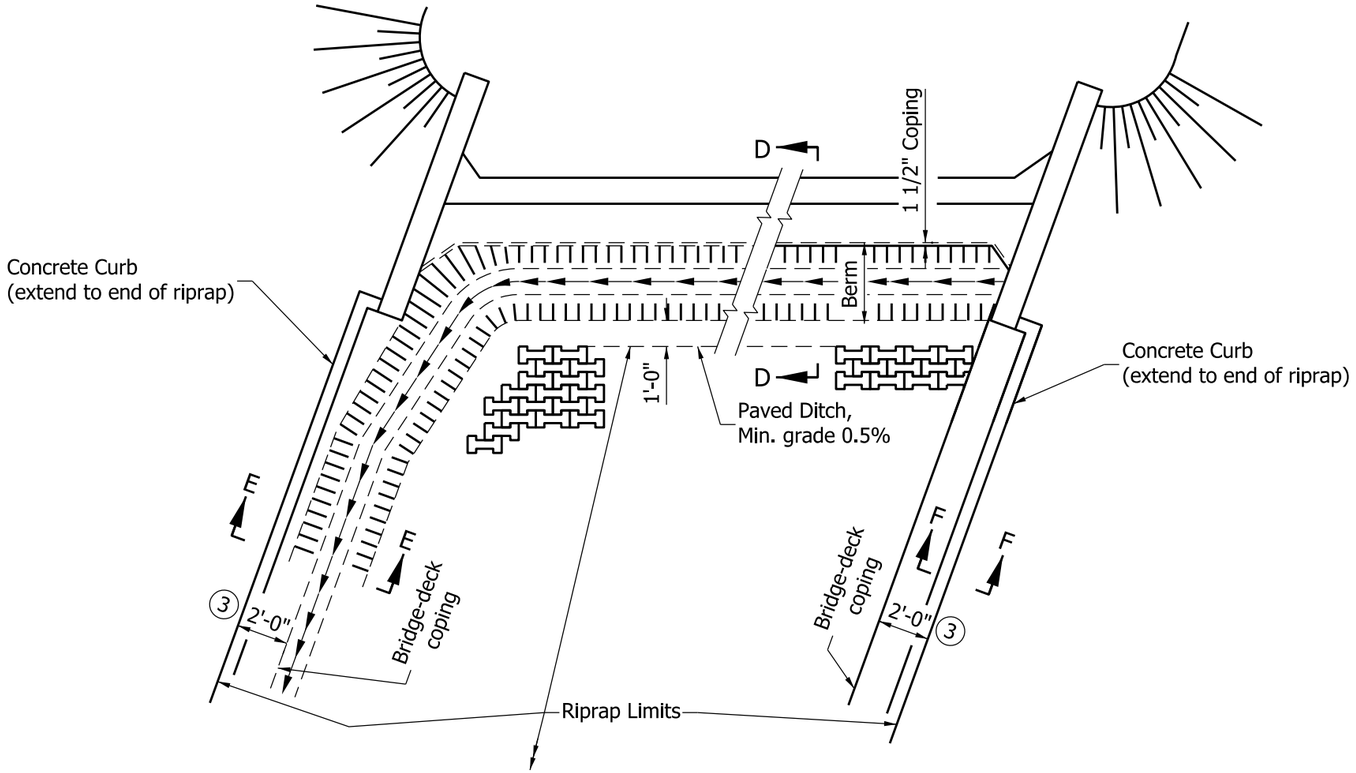

STRAIGHT WINGS

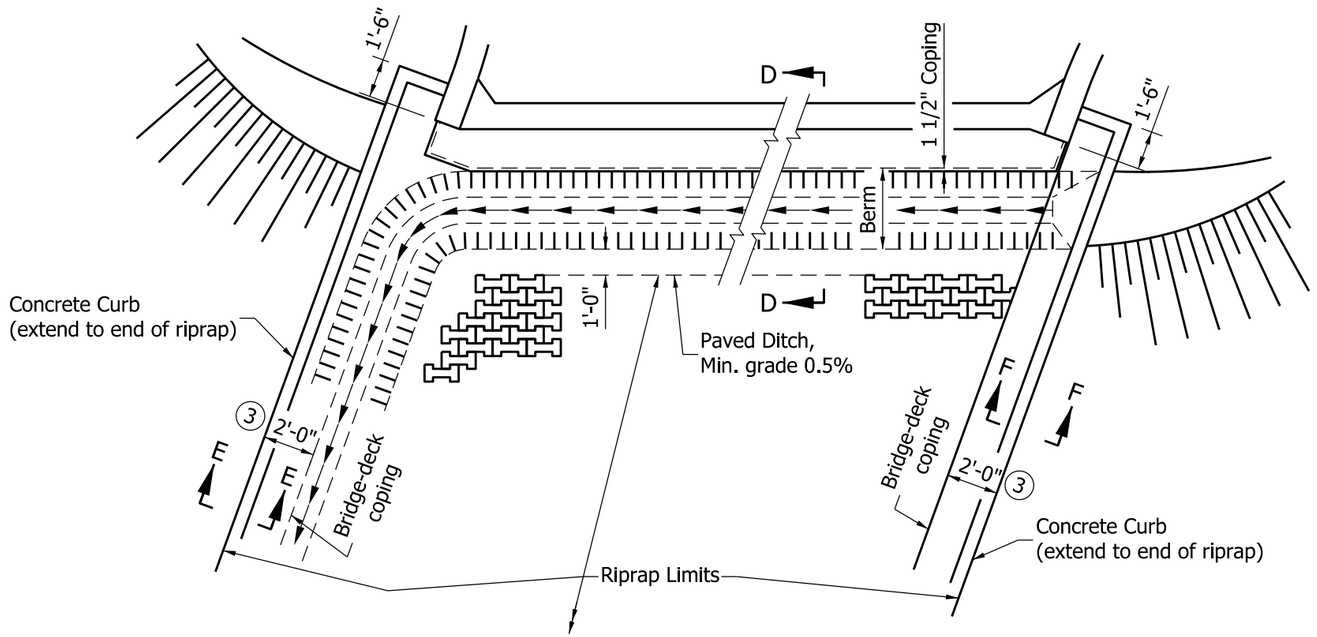

FLARED WINGS

NOTES:

1. These configurations to be used with precast or hand-laid riprap.
2. See Standard Drawing E 616-SWRR-01 for Sections D-D, E-E, and F-F.

(3) This dimension shall be increased to 5'-0" where no curb is used on the bridge.

INDIANA DEPARTMENT OF TRANSPORTATION

DRAINAGE DETAILS
AT END BENTS

SEPTEMBER 2011

STANDARD DRAWING NO. E 616-SWCO-02

RICHARD L. VanCLEAVE
REGISTERED
No. 9750
STATE OF INDIANA
PROFESSIONAL ENGINEER

DESIGN STANDARDS ENGINEER

/s/ Richard L. VanCleave 09/01/11
DESIGN STANDARDS ENGINEER DATE

/s/ Mark A. Miller 09/01/11
CHIEF HIGHWAY ENGINEER DATE

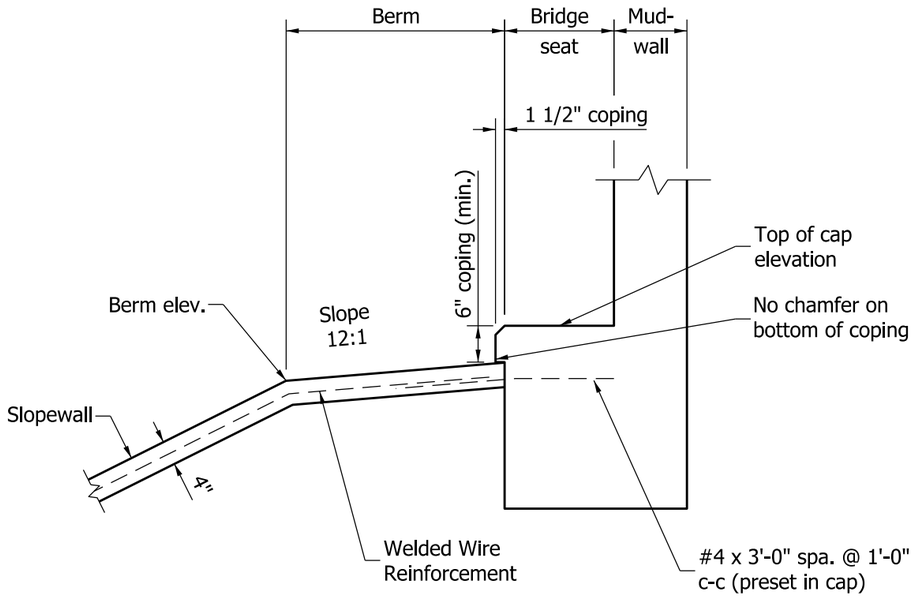

SECTION A-A

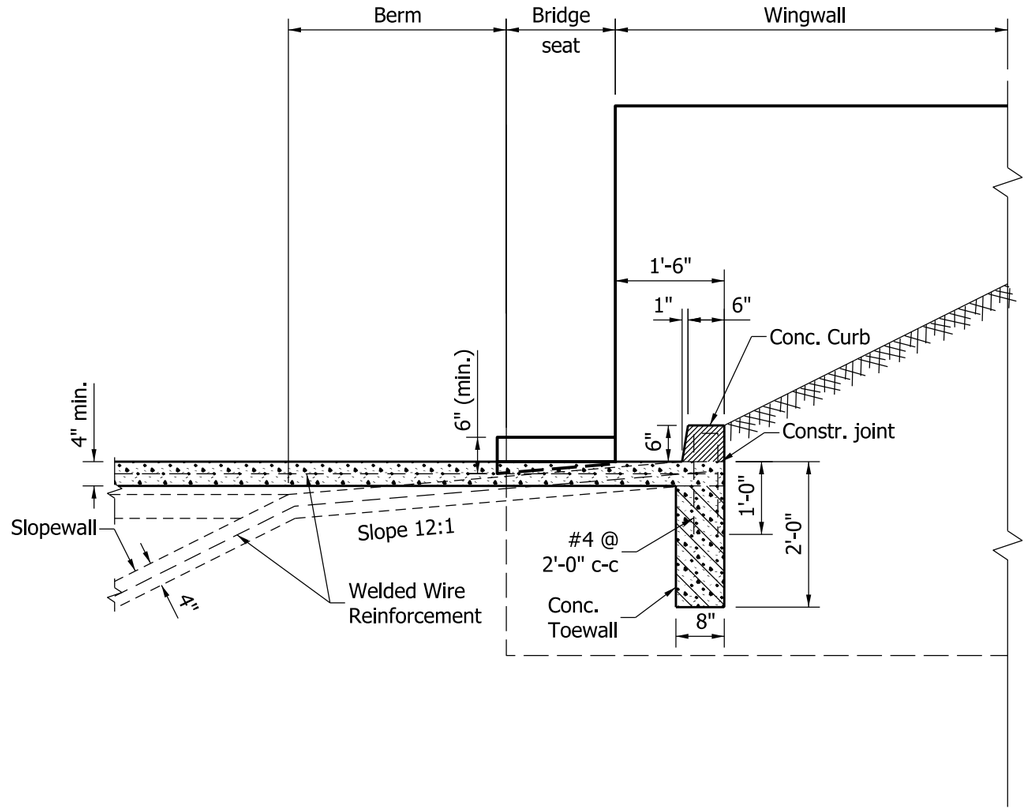

SECTION B-B

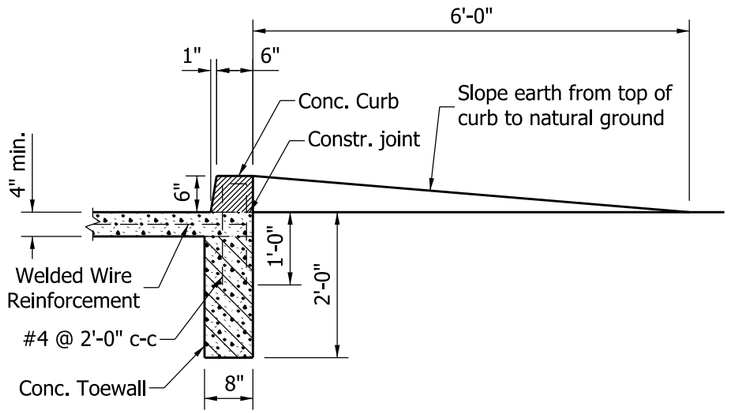

SECTION C-C

INDIANA DEPARTMENT OF TRANSPORTATION

CONCRETE SLOPEWALL DETAILS

SEPTEMBER 2011

STANDARD DRAWING NO. E 616-SWCO-03

RICHARD L. VanCLEAVE REGISTERED No. 9750 STATE OF INDIANA PROFESSIONAL ENGINEER

DESIGN STANDARDS ENGINEER

/s/ Richard L. VanCleave *09/01/11*

DESIGN STANDARDS ENGINEER — DATE

/s/ Mark A. Miller *09/01/11*

CHIEF HIGHWAY ENGINEER — DATE

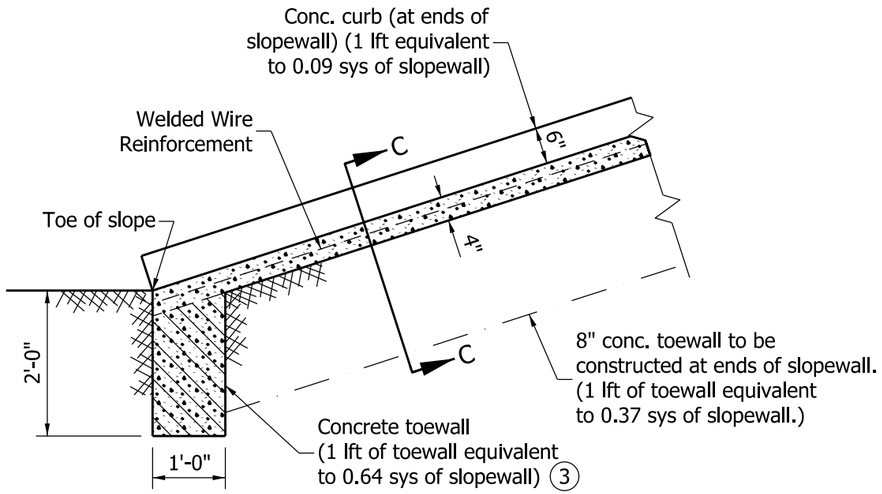

SECTION THROUGH CONCRETE SLOPEWALL

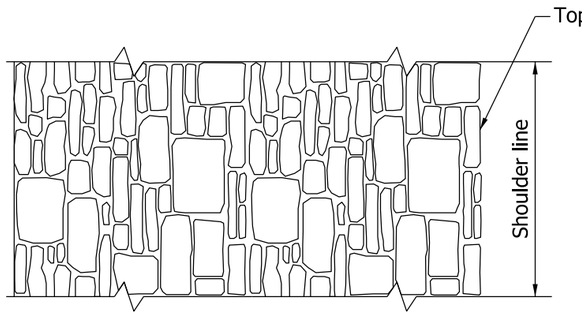

PLAN

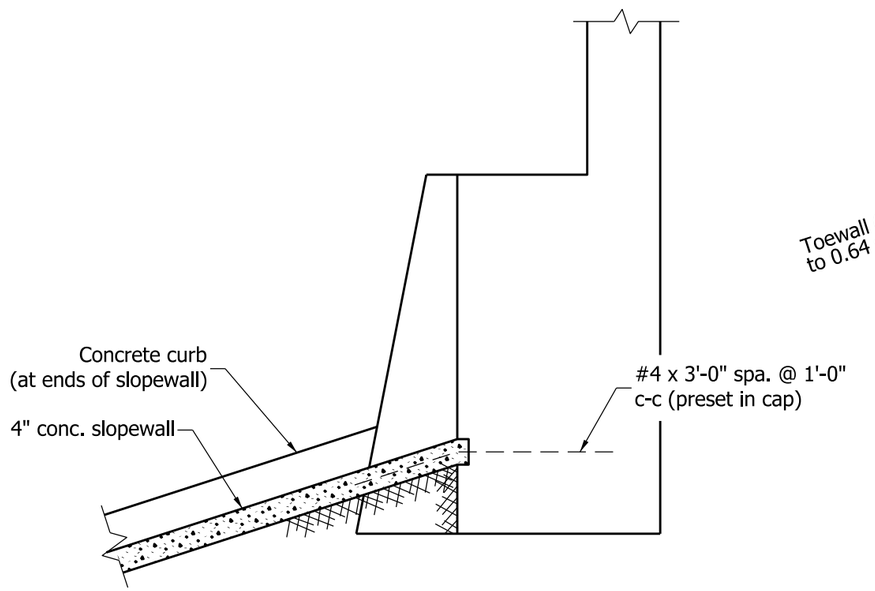

TYPICAL SECTION THROUGH SLOPEWALL AT STRUCTURES WITHOUT BERMS

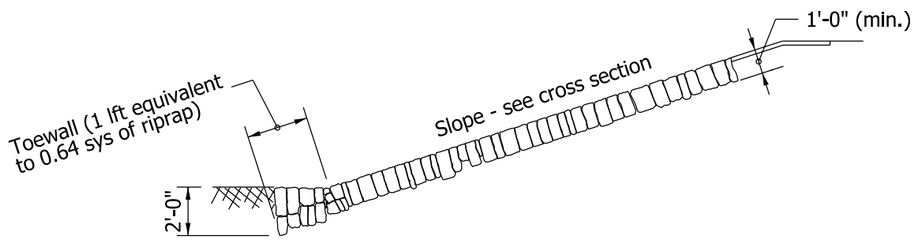

SECTION THROUGH HAND-LAID RIPRAP

NOTES:

1. See Section F-F on Standard Drawing E 616-SWCO-03 for Section C-C.
2. Where hand-laid riprap is used under a structure, a drainage configuration similar to that shown for precast concrete riprap shall be used. See Standard Drawing E 616-SWRR-02 for such configuration.

(3) Toewall is not required adjacent to a pier or bent.

INDIANA DEPARTMENT OF TRANSPORTATION

CONCRETE AND RIPRAP SLOPEWALL DETAILS

SEPTEMBER 2011

STANDARD DRAWING NO. E 616-SWCO-04

RICHARD L. VanCLEAVE REGISTERED No. 9750 STATE OF INDIANA PROFESSIONAL ENGINEER

DESIGN STANDARDS ENGINEER

/s/ Richard L. VanCleave 09/01/11
DESIGN STANDARDS ENGINEER DATE

/s/ Mark A. Miller 09/01/11
CHIEF HIGHWAY ENGINEER DATE

NOTES:

1. See Standard Drawing E 616-SWCO-06 for Sections A-A, B-B, C-C, D-D, and E-E.
2. See General Plan for stations and locations of inlets and pipe.

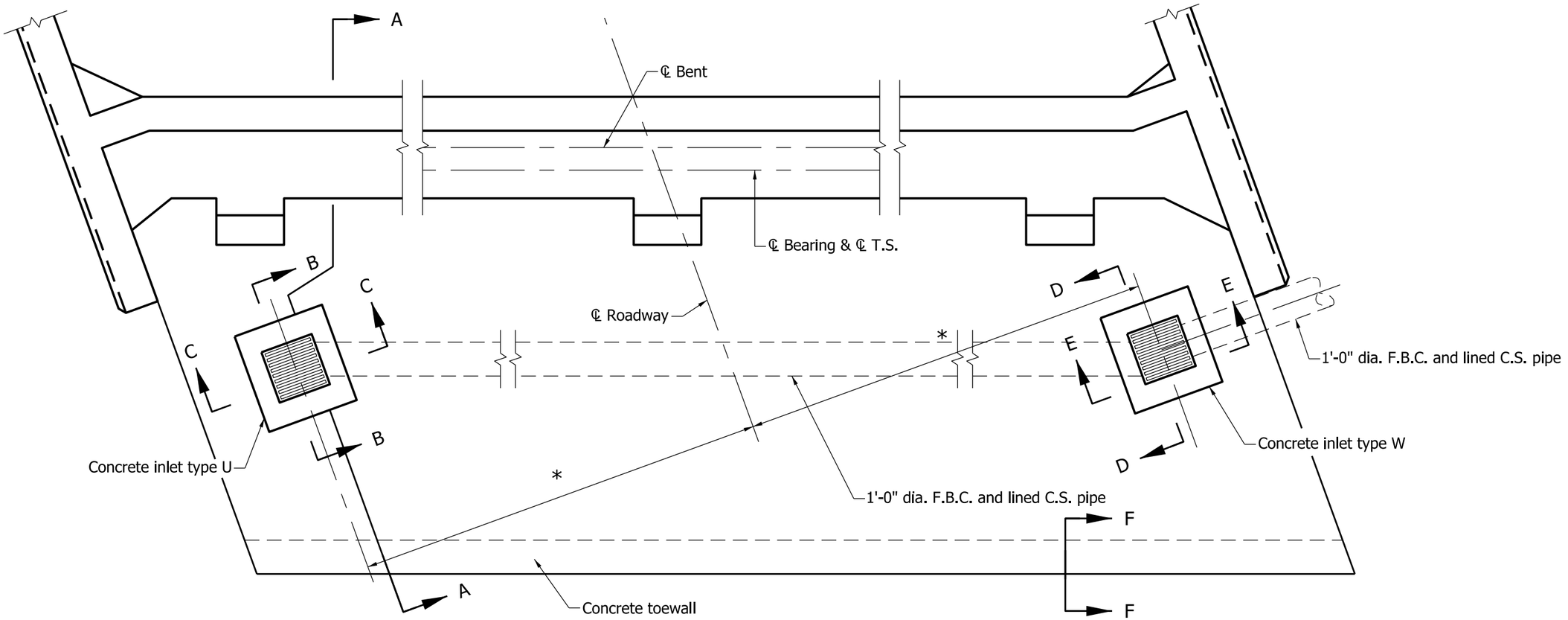

PLAN
(to be used on structures without berms)

* Dimension varies according to roadway width and type of drain used

INDIANA DEPARTMENT OF TRANSPORTATION

SLOPEWALL AND DRAINAGE DETAILS

SEPTEMBER 2011

STANDARD DRAWING NO. E 616-SWCO-05

RICHARD L. VanCLEAVE REGISTERED No. 9750 STATE OF INDIANA PROFESSIONAL ENGINEER

DESIGN STANDARDS ENGINEER

/s/ Richard L. VanCleave 09/01/11
DESIGN STANDARDS ENGINEER DATE

/s/ Mark A. Miller 09/01/11
CHIEF HIGHWAY ENGINEER DATE

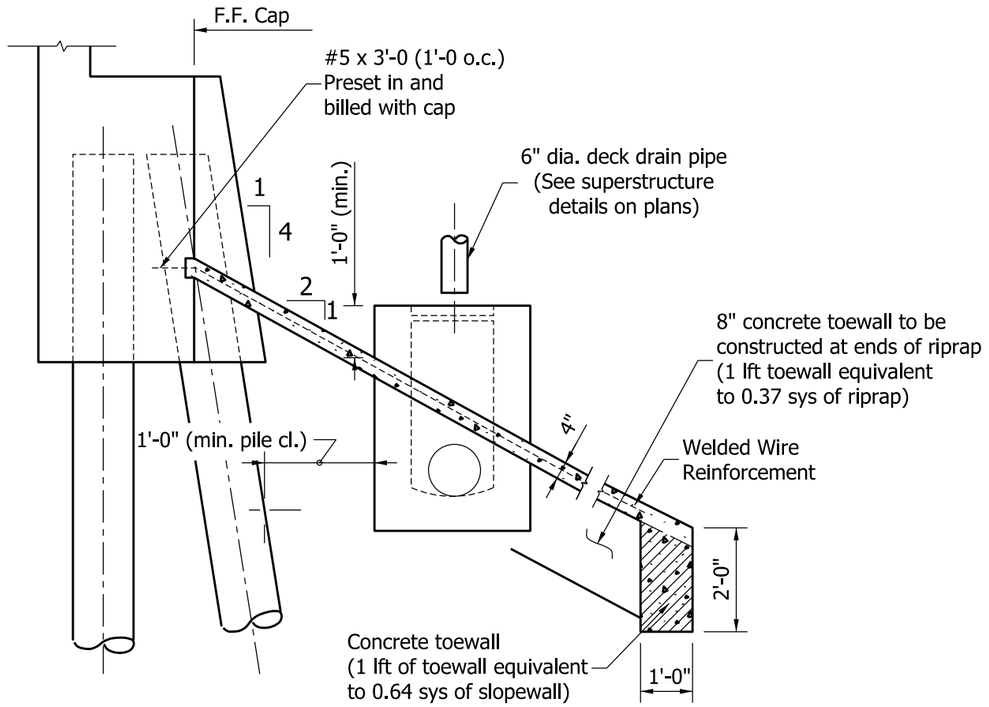

SECTION A-A
TYPICAL ELEVATION THRU SLOPEWALL

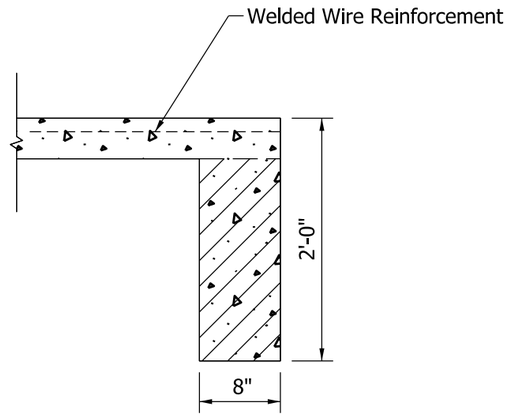

SECTION F-F

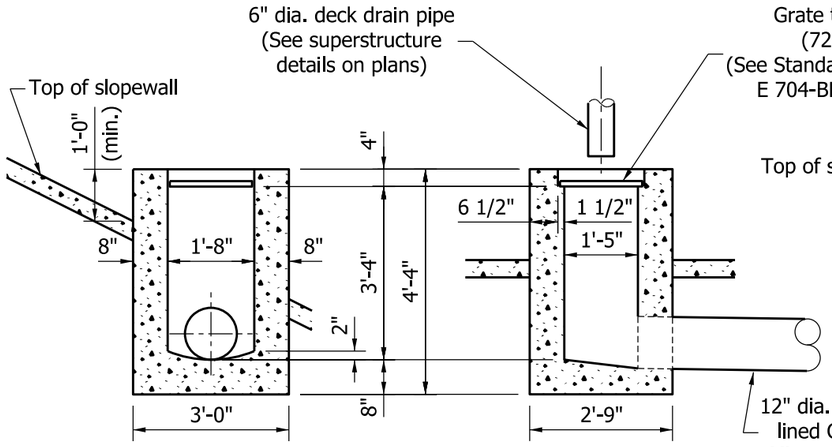

SECTION B-B

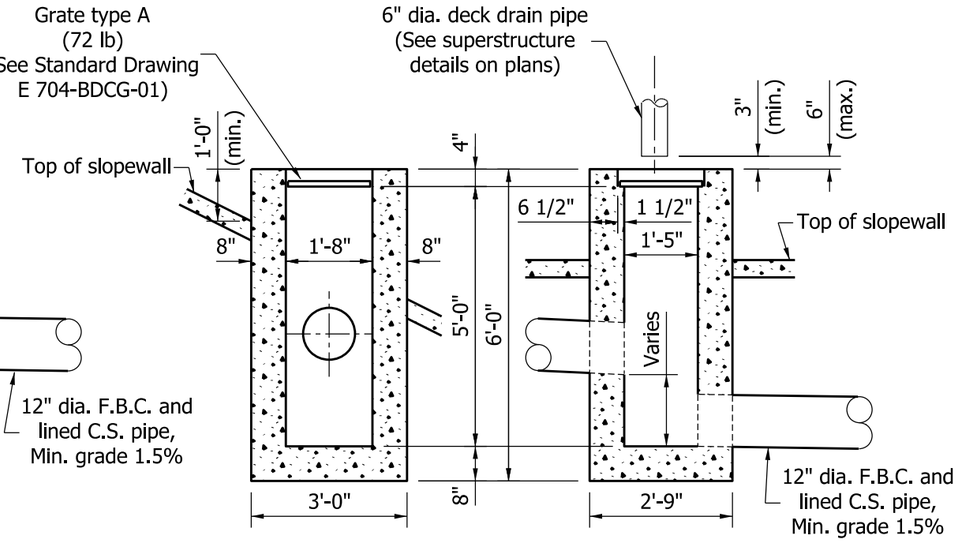

SECTION C-C

DETAIL OF CONCRETE INLET TYPE U

SECTION D-D

SECTION E-E

DETAIL OF CONCRETE INLET TYPE W

INDIANA DEPARTMENT OF TRANSPORTATION

SLOPEWALL AND DRAINAGE
DETAILS

SEPTEMBER 2011

STANDARD DRAWING NO. E 616-SWCO-06

RICHARD L. VanCLEAVE
REGISTERED
No. 9750
STATE OF INDIANA
PROFESSIONAL ENGINEER

DESIGN STANDARDS ENGINEER

/s/ Richard L. VanCleave 09/01/11
DESIGN STANDARDS ENGINEER DATE

/s/ Mark A. Miller 09/01/11
CHIEF HIGHWAY ENGINEER DATE

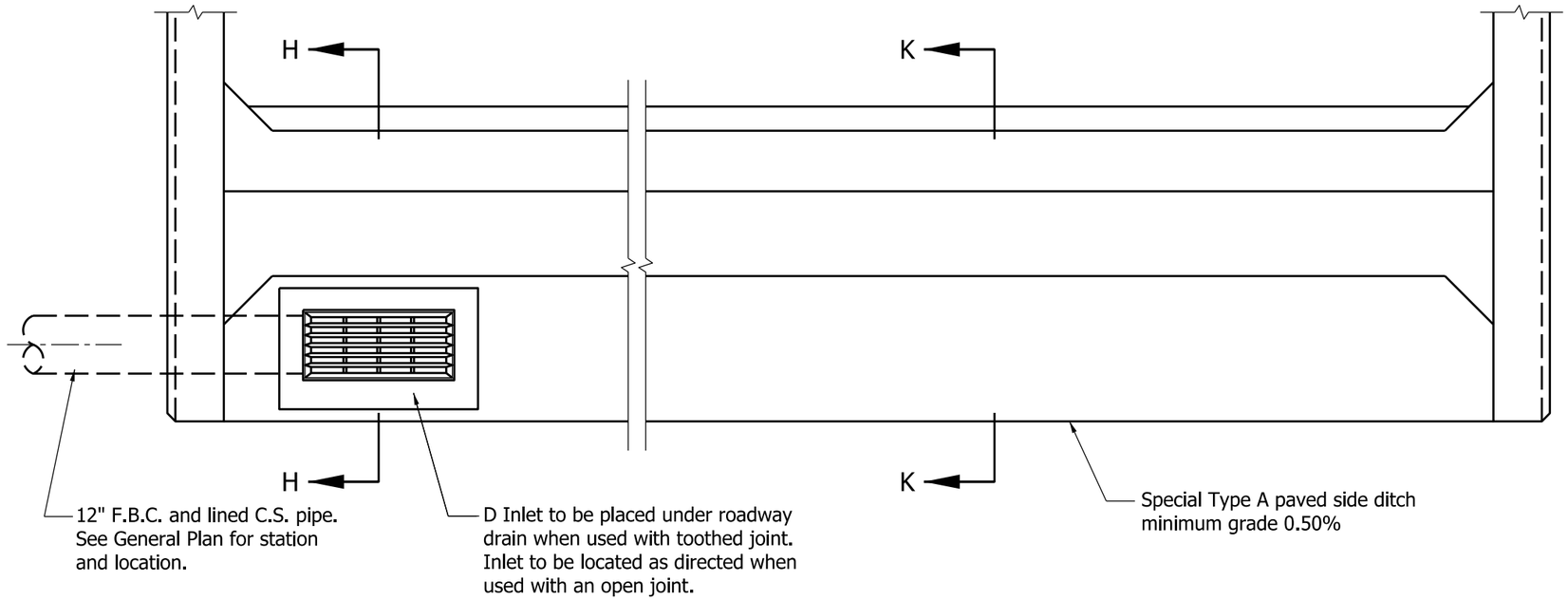

PLAN
(to be used on structures with berms)

NOTES:

1. Precast concrete riprap may be used as an alternate to concrete slopewall only on a structure having a berm adjacent to a cap.

(2) For appropriate casting, see Standard Drawing E 720-CDSC-01.

(3) For additional details of type D inlet, see Standard Drawing E 720-INST-03.

4. WWR shall be placed within the middle third of slopewall thickness and shall extend through all construction joints.

(5) WWR 6" x 6", W2.9 x W2.9 at 42 lb/100 sq. ft., or equivalent.

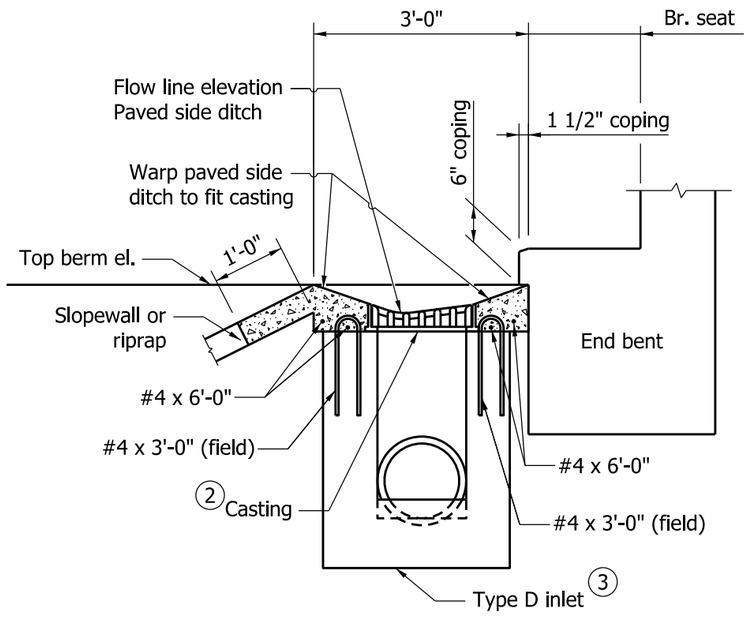

SECTION H-H

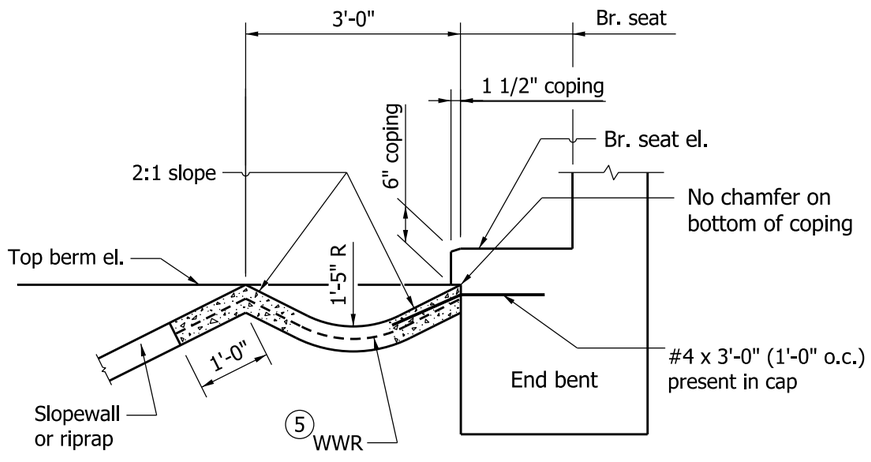

SECTION K-K

INDIANA DEPARTMENT OF TRANSPORTATION

SLOPEWALL AND DRAINAGE DETAILS

SEPTEMBER 2011

STANDARD DRAWING NO. E 616-SWCO-07

RICHARD L. VanCLEAVE
REGISTERED
No. 9750
STATE OF INDIANA
PROFESSIONAL ENGINEER

DESIGN STANDARDS ENGINEER

/s/ Richard L. VanCleave 09/01/11
DESIGN STANDARDS ENGINEER DATE

/s/ Mark A. Miller 09/01/11
CHIEF HIGHWAY ENGINEER DATE

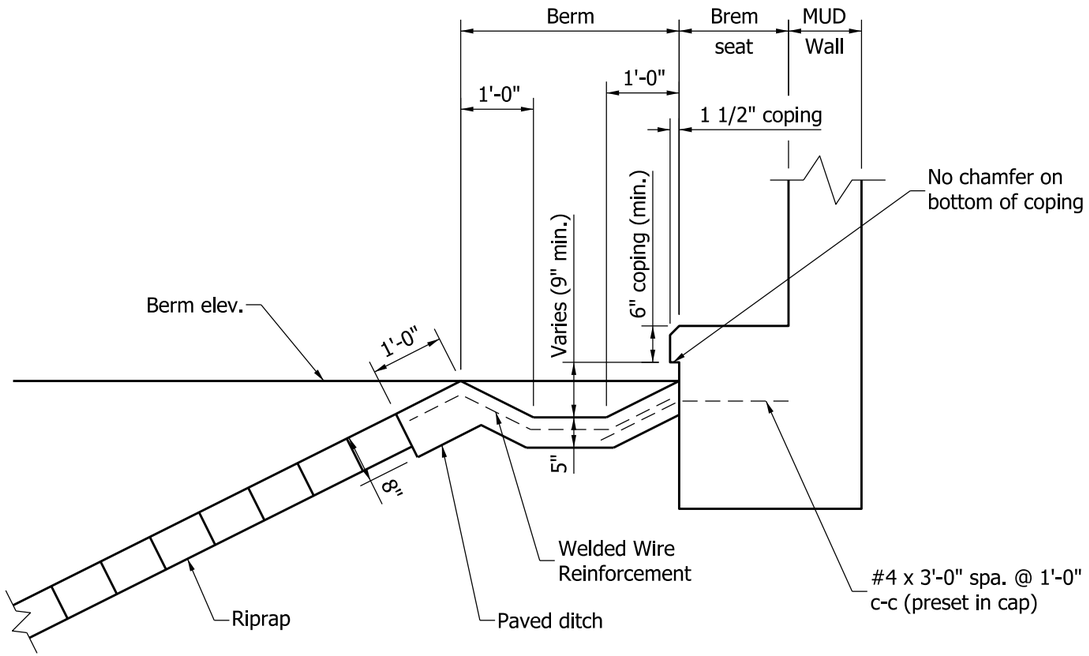

SECTION D-D

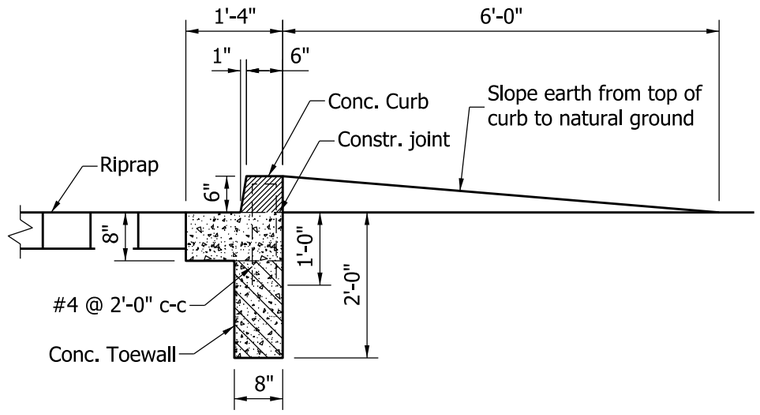

SECTION F-F

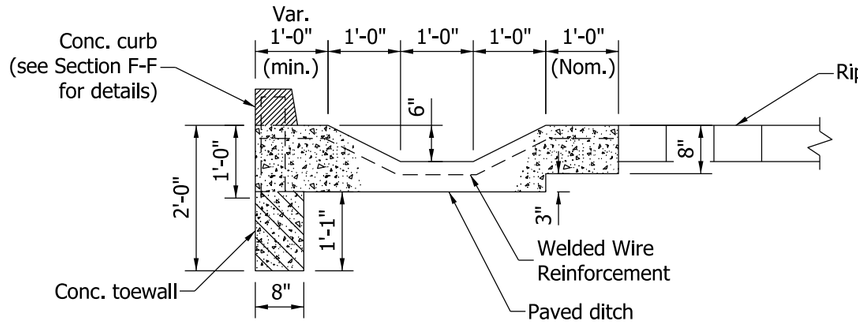

SECTION E-E
Where riprap terminates
2'-0" outside of coping line

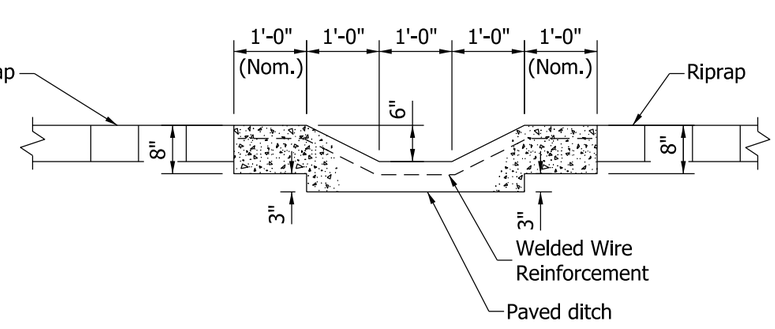

SECTION E-E
Where riprap terminates more
than 2'-0" outside of coping line

INDIANA DEPARTMENT OF TRANSPORTATION

RIPRAP SLOPEWALL DETAILS

SEPTEMBER 2011

STANDARD DRAWING NO. E 616-SWRR-01

RICHARD L. VanCLEAVE REGISTERED No. 9750 STATE OF INDIANA PROFESSIONAL ENGINEER

DESIGN STANDARDS ENGINEER

/s/ Richard L. VanCleave 09/01/11
DESIGN STANDARDS ENGINEER DATE

/s/ Mark A. Miller 09/01/11
CHIEF HIGHWAY ENGINEER DATE

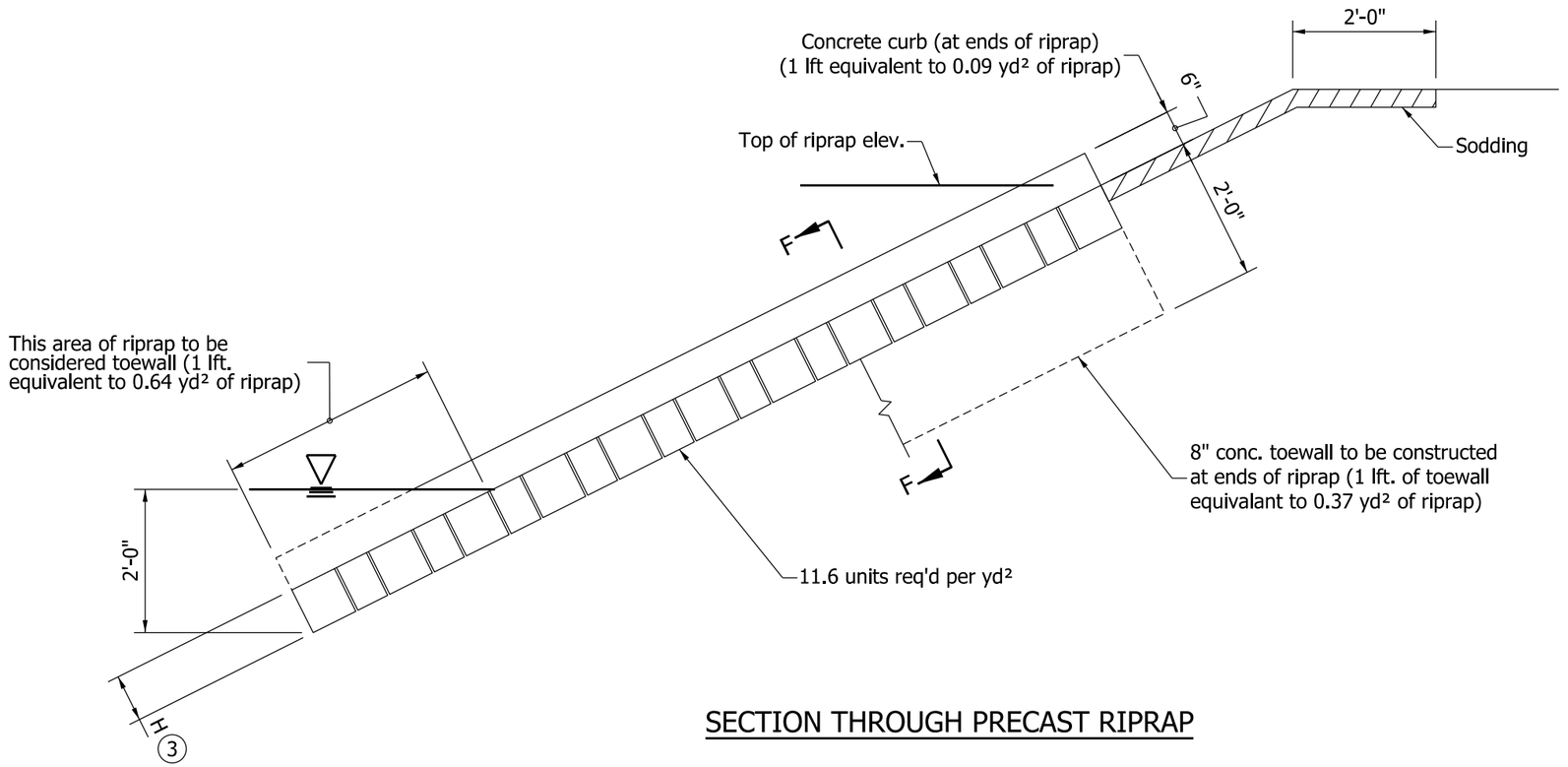

SECTION THROUGH PRECAST RIPRAP

NOTES:

1. See Standard Drawing E 616-SWRR-01 for Section F-F.
2. If riprap is specified, 1'-0" hand-laid riprap or precast concrete riprap type A may be used.

(3) Precast concrete riprap:
Type A: H = 7 5/8" (8" nom.)
Type B: H = 3 5/8" (4" nom.)

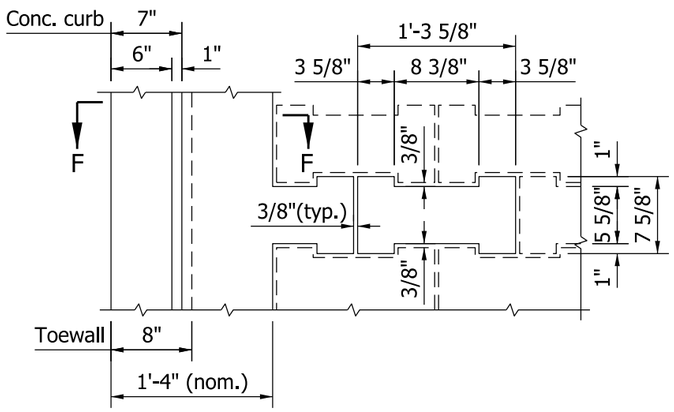

PLAN - PRECAST CONCRETE RIPRAP
(Type A shown)

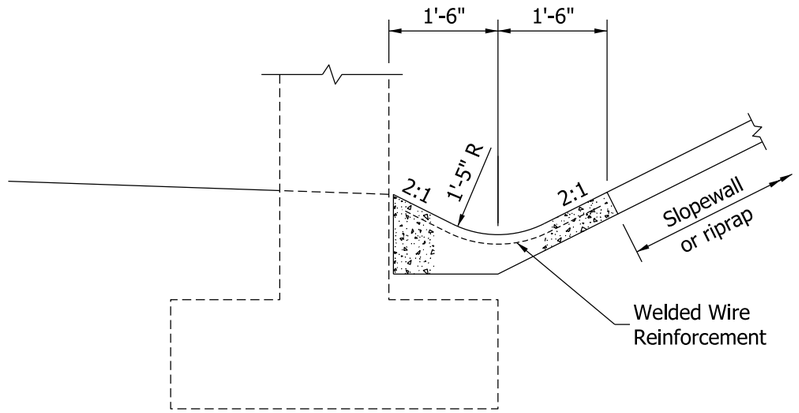

SECTION THROUGH PAVED DITCH AT TOE OF SLOPE
(See layout on plans for location of paved ditch)

INDIANA DEPARTMENT OF TRANSPORTATION

RIPRAP SLOPEWALL DETAILS

SEPTEMBER 2011

STANDARD DRAWING NO. E 616-SWRR-02

RICHARD L. VanCLEAVE REGISTERED No. 9750 STATE OF INDIANA PROFESSIONAL ENGINEER

DESIGN STANDARDS ENGINEER

/s/ Richard L. VanCleave 09/01/11
DESIGN STANDARDS ENGINEER DATE

/s/ Mark A. Miller 09/01/11
CHIEF HIGHWAY ENGINEER DATE

GENERAL NOTES:

1. See Standard Drawing MS for inlet type N-12 details.
2. Contours and top of weir elevation shown in Section A-A are in feet relative to the ditch grade.
3. The type N-12 inlet may be placed at the cross pipe structure to eliminate the longitudinal pipe which connects the inlet to the cross pipe.

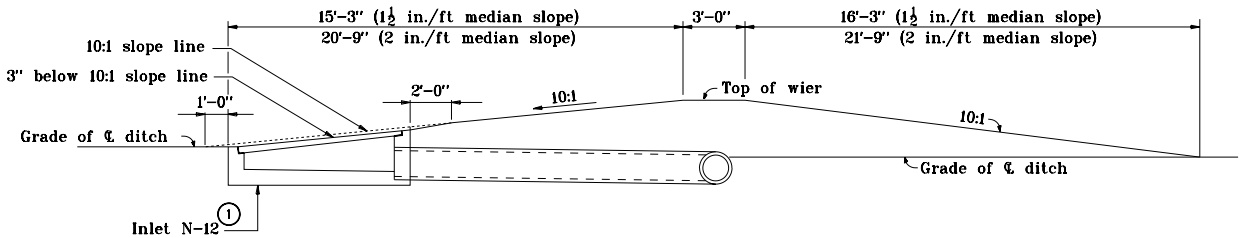

SECTION A-A

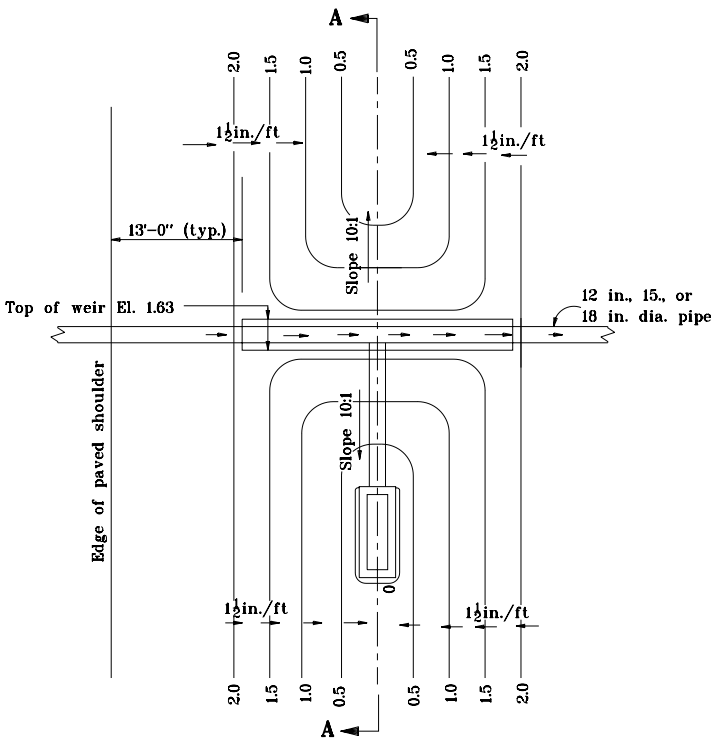

PLAN

1½ in./ft MEDIAN SLOPE

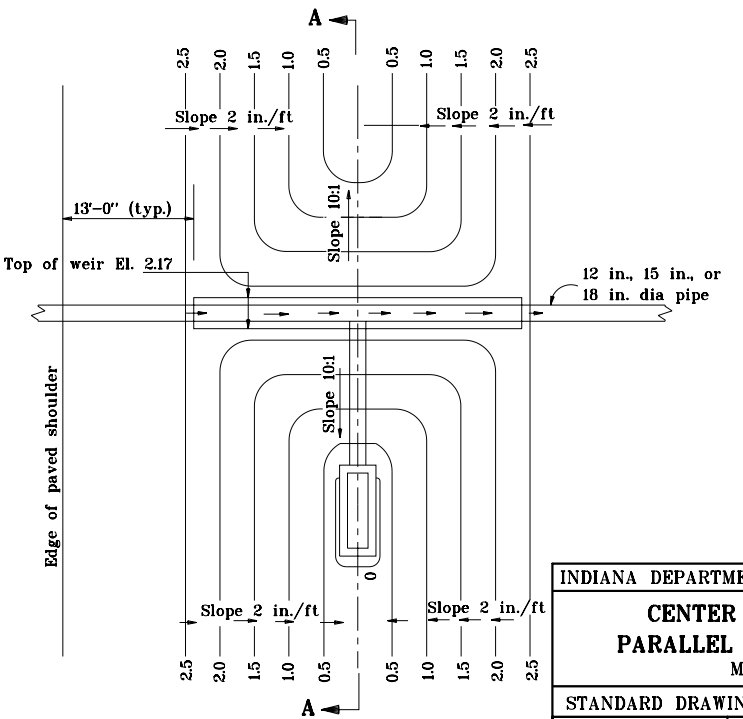

PLAN

2 in./ft MEDIAN SLOPE

Source Sheet: MS1

INDIANA DEPARTMENT OF TRANSPORTATION

CENTER DITCH INLET
PARALLEL TO ℄ ROADWAY
MAY 1998

STANDARD DRAWING NO. **E 617-CDIN-01**

ONY L. UREMOVICH REGISTERED No. 18095 STATE OF INDIANA PROFESSIONAL ENGINEER
DESIGN STANDARDS ENGINEER

/s/ Anthony L. Uremovich 5-01-98
DESIGN STANDARDS ENGINEER DATE

/s/ Donald W. Lucas 5-01-98
CHIEF HIGHWAY ENGINEER DATE

GENERAL NOTES

(1) See Standard Drawing MS for inlet type N–12 details.

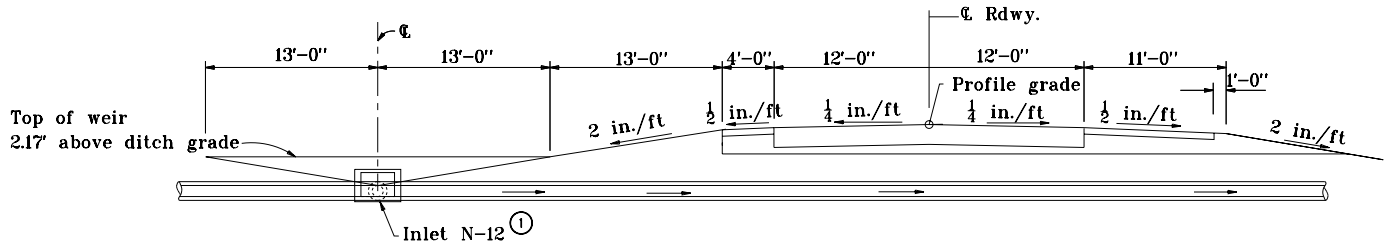

USE WITH MEDIAN SLOPE OF 2 in./ft

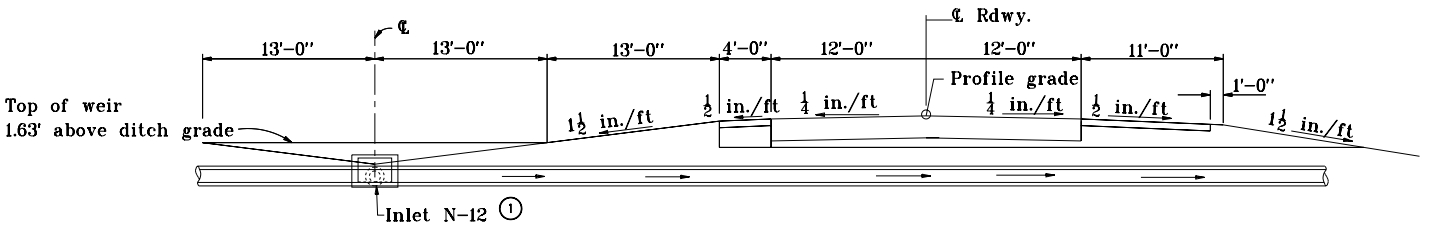

USE WITH MEDIAN SLOPE OF 1½ in./ft

INDIANA DEPARTMENT OF TRANSPORTATION

CENTER DITCH INLET
PARALLEL TO ℄ ROADWAY

MAY 1998

STANDARD DRAWING NO. **E 617–CDIN–02**

ONY L. UREMOVICH REGISTERED No. 18095 STATE OF INDIANA PROFESSIONAL ENGINEER

DESIGN STANDARDS ENGINEER

/s/ Anthony L. Uremovich 5–01–98
DESIGN STANDARDS ENGINEER DATE

/s/ Donald W. Lucas 5–01–98
CHIEF HIGHWAY ENGINEER DATE

Source Sheet: MS1

GENERAL NOTES:

1. See Standard Drawing MS for inlet type P-12 details.
2. Contours and top of weir elevation shown in Section B-B are in feet relative to the ditch grade.

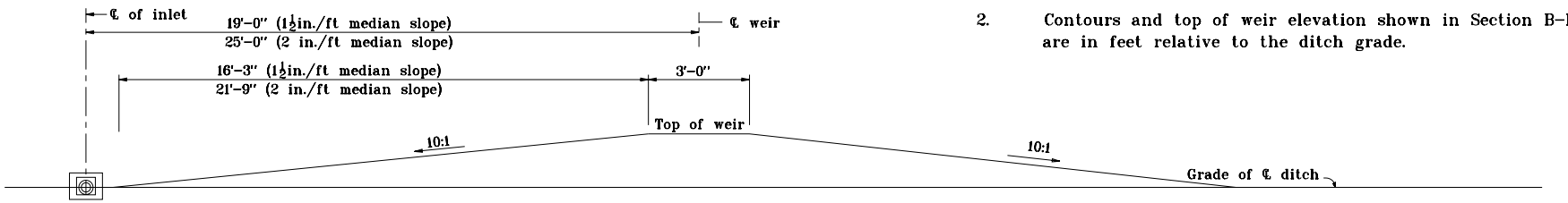

SECTION B-B

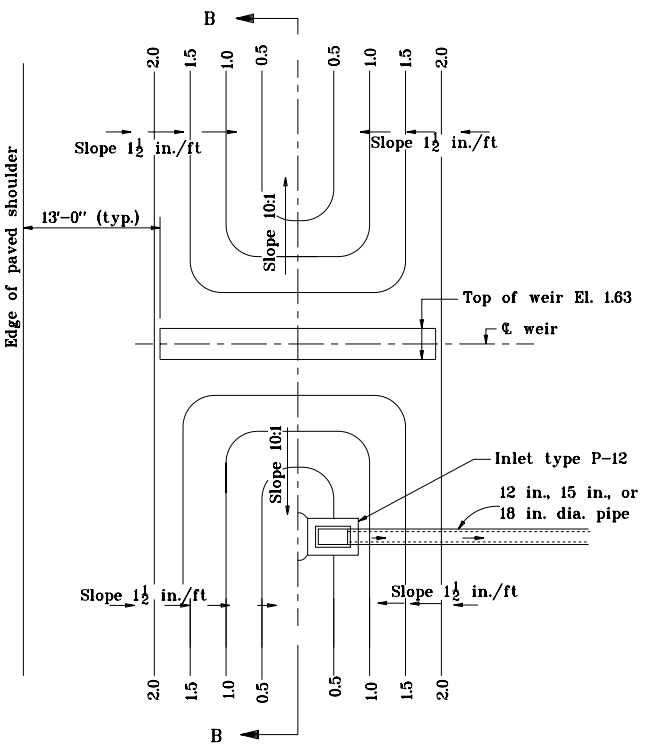

PLAN
1½ in./ft MEDIAN SLOPE

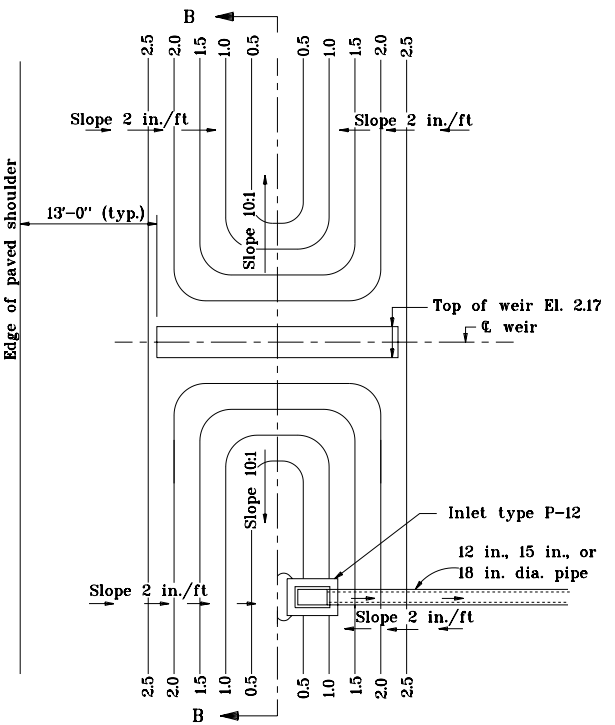

PLAN
2 in./ft MEDIAN SLOPE

INDIANA DEPARTMENT OF TRANSPORTATION

CENTER DITCH INLET PERPENDICULAR TO ℄ ROADWAY

MAY 1998

STANDARD DRAWING NO. **E 617-CDIN-03**

ONY L. UREMOVICH REGISTERED No. 18095 STATE OF INDIANA PROFESSIONAL ENGINEER
DESIGN STANDARDS ENGINEER

/s/ Anthony L. Uremovich 5-01-98
DESIGN STANDARDS ENGINEER — DATE

/s/ Donald W. Lucas 5-01-98
CHIEF HIGHWAY ENGINEER — DATE

Source Sheet: MS1

GENERAL NOTES

(1) See Standard drawing MS for inlet type P-12 details.

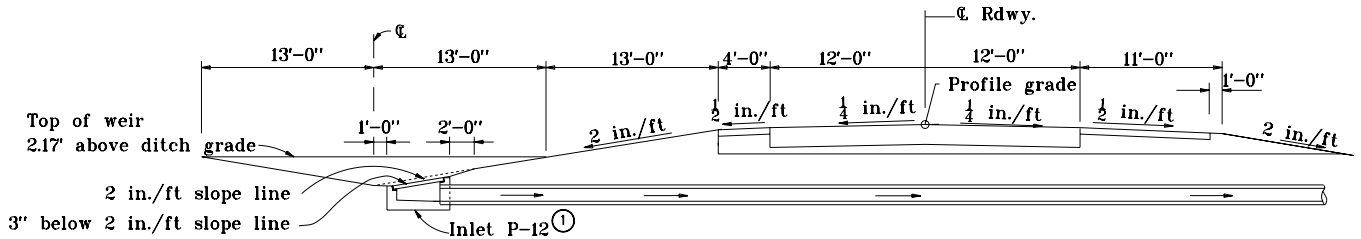

USE WITH MEDIAN SLOPE OF 2 in./ft

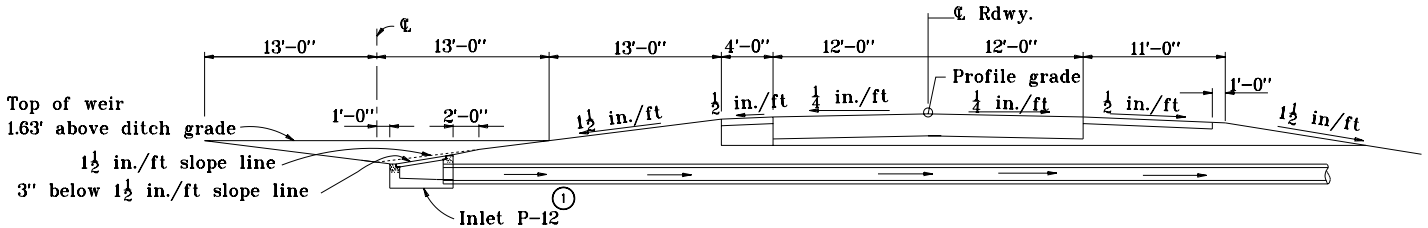

USE WITH MEDIAN SLOPE OF 1½ in./ft

INDIANA DEPARTMENT OF TRANSPORTATION

CENTER DITCH INLET PERPENDICULAR TO ℄ ROADWAY

MAY 1998

STANDARD DRAWING NO. **E 617-CDIN-04**

ONY L. UREMOVICH REGISTERED No. 18095 STATE OF INDIANA PROFESSIONAL ENGINEER

DESIGN STANDARDS ENGINEER

/s/ Anthony L. Uremovich 5-01-98
DESIGN STANDARDS ENGINEER — DATE

/s/ Donald W. Lucas 5-01-98
CHIEF HIGHWAY ENGINEER — DATE

Source Sheet: MS1

INDEX	
SHEET NO.	SUBJECT
1	COATING REQUIREMENTS FOR STRUCTURAL STEEL INDEX
2	COATING REQUIREMENTS FOR WEATHERING STEEL
3	COATING REQUIREMENTS FOR EXISTING STRUCTURAL STEEL ENCASED IN CONCRETE

INDIANA DEPARTMENT OF TRANSPORTATION

COATING REQUIREMENTS FOR
STRUCTURAL STEEL
INDEX

SEPTEMBER 2024

STANDARD DRAWING NO. E 619-PRWS-01

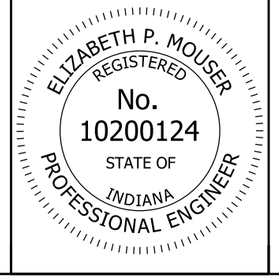

04/12/2024
DESIGN STANDARDS ENGINEER DATE

04/22/2024
CHIEF ENGINEER DATE

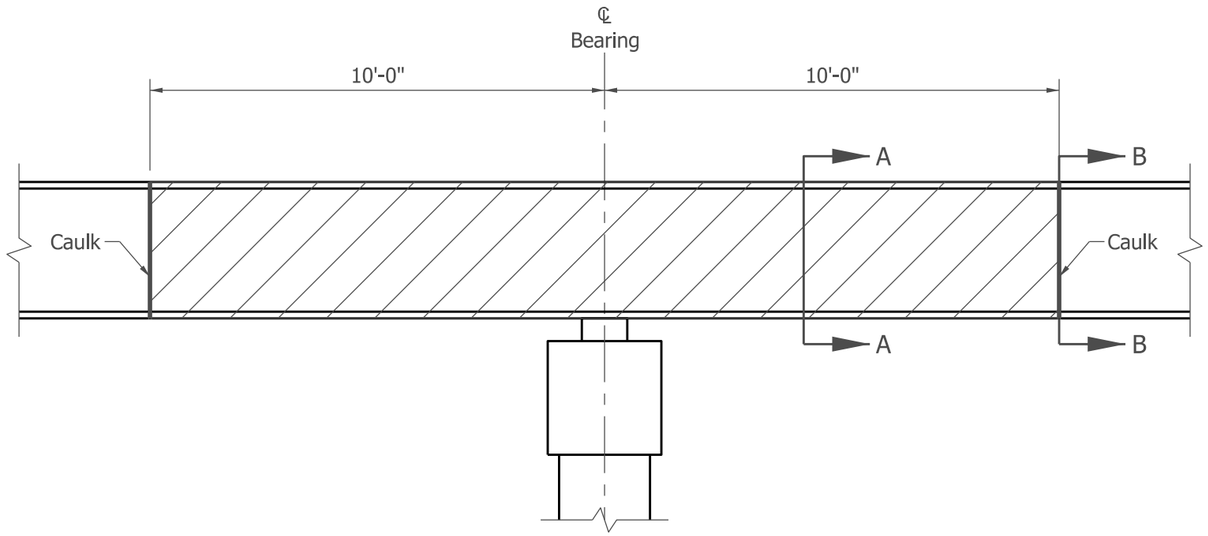

BEAM OR GIRDER AT INTERIOR SUPPORT

ELEVATION VIEW
(Bridge Deck not shown for clarity)

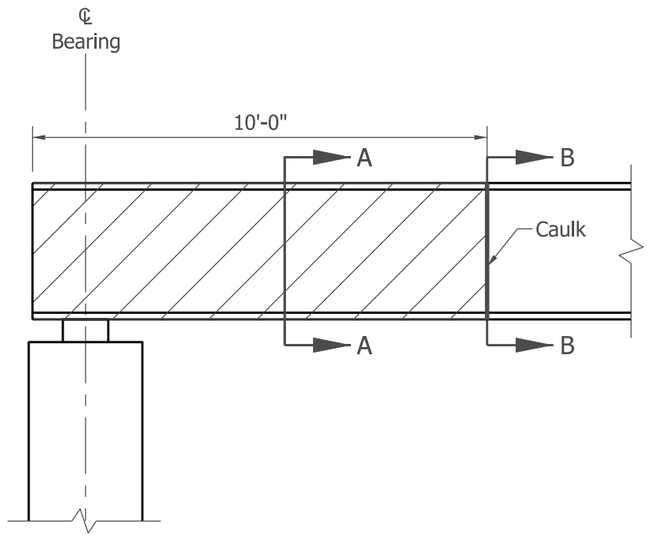

BEAM OR GIRDER AT END-BENT SUPPORT

ELEVATION VIEW
(Bridge Deck, Mudwall, and Concrete Encasement not shown for clarity)

NOTE:

1. Caulk shall be placed on the coated surface at the coated/uncoated interface and is intended to function as a drip bead.

LEGEND:

= Area to be coated

— — = Caulk Bead

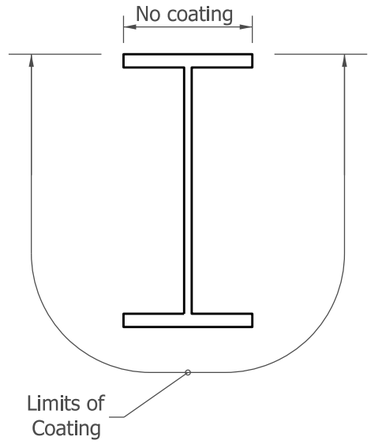

SECTION A-A

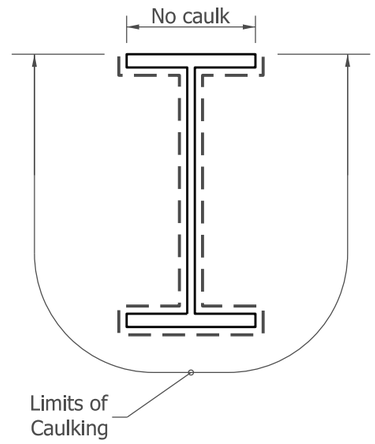

SECTION B-B

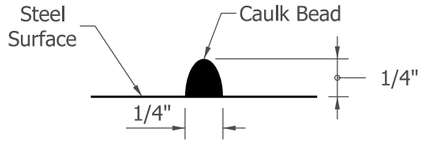

CAULK BEAD DETAIL

INDIANA DEPARTMENT OF TRANSPORTATION

COATING REQUIREMENTS
FOR WEATHERING STEEL

SEPTEMBER 2024

STANDARD DRAWING NO. E 619-PRWS-02

ELIZABETH P. MOUSER
REGISTERED
No.
10200124
STATE OF
INDIANA
PROFESSIONAL ENGINEER

04/12/2024
DESIGN STANDARDS ENGINEER DATE

04/22/2024
CHIEF ENGINEER DATE

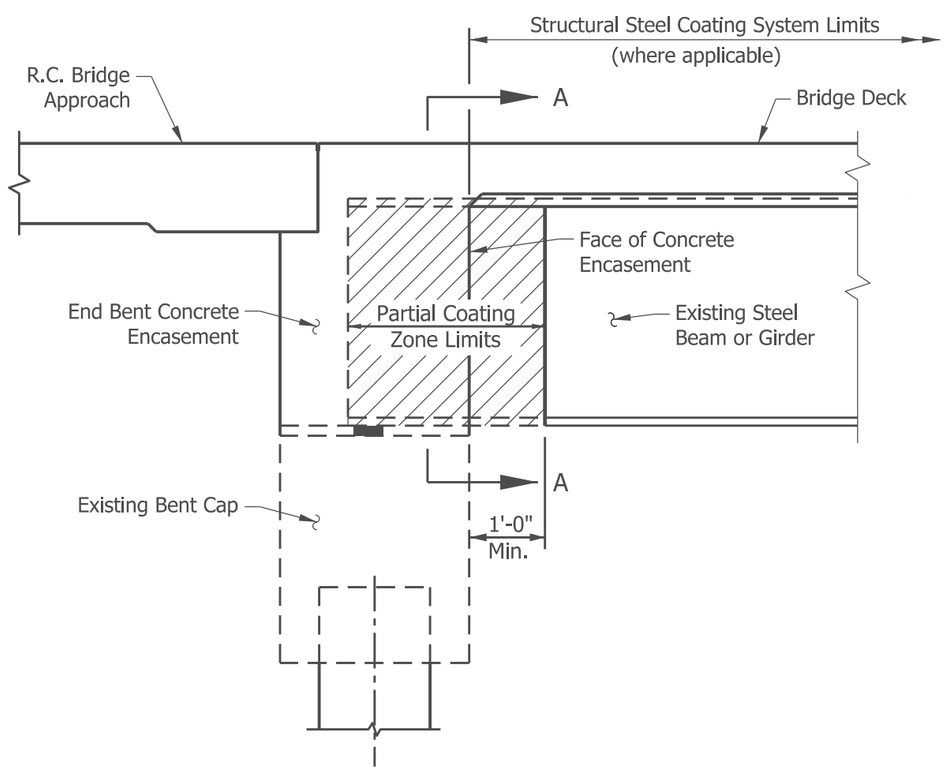

EXISTING STRUCTURAL STEEL MEMBERS
ENCASED IN CONCRETE

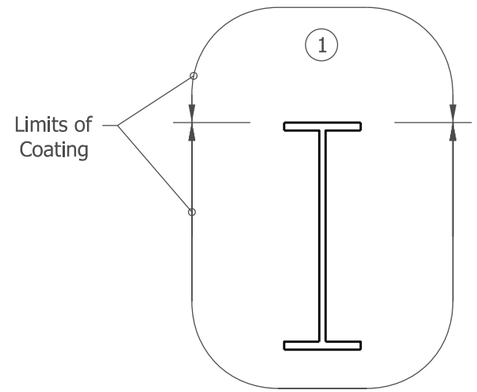

SECTION A-A

NOTE:

(1) Where shear connectors have been specified, the top of the top flange shall not be coated.

LEGEND:

= Area to be coated

INDIANA DEPARTMENT OF TRANSPORTATION

COATING REQUIREMENTS FOR
EXISTING STRUCTURAL STEEL
ENCASED IN CONCRETE

SEPTEMBER 2024

STANDARD DRAWING NO. E 619-PRWS-03

ELIZABETH P. MOUSER
REGISTERED
No.
10200124
STATE OF
INDIANA
PROFESSIONAL ENGINEER

04/16/2024
DESIGN STANDARDS ENGINEER DATE

04/22/2024
CHIEF ENGINEER DATE

INDEX

SHEET NO.	SUBJECT
1	Index
2	Planting Balled and Burlapped Tree Less than 1 1/4 in. Caliper
3	Planting Balled and Burlapped Tree Less than 1 1/4 in. Caliper and Greater
4	Planting Multi-Stem Tree
5	Planting Bare Root Tree
6	Planting Grafted Tree
7	Planting on Slope
8	Planting on Slope
9	Typical Section of Shrub Bed
10	Planting Seedling Varieties
11	Typical Plan of Shrub Bed
12	Commonly Used Dimensions

INDIANA DEPARTMENT OF TRANSPORTATION

LANDSCAPE PLANTING
INDEX

SEPTEMBER 2018

STANDARD DRAWING NO. E 622-LSPL-01

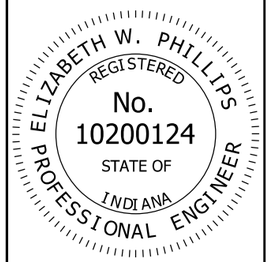

/s/ Elizabeth W. Phillips *03/20/18*
DESIGN STANDARDS ENGINEER DATE

/s/ John Leckie *05/07/18*
CHIEF ENGINEER DATE

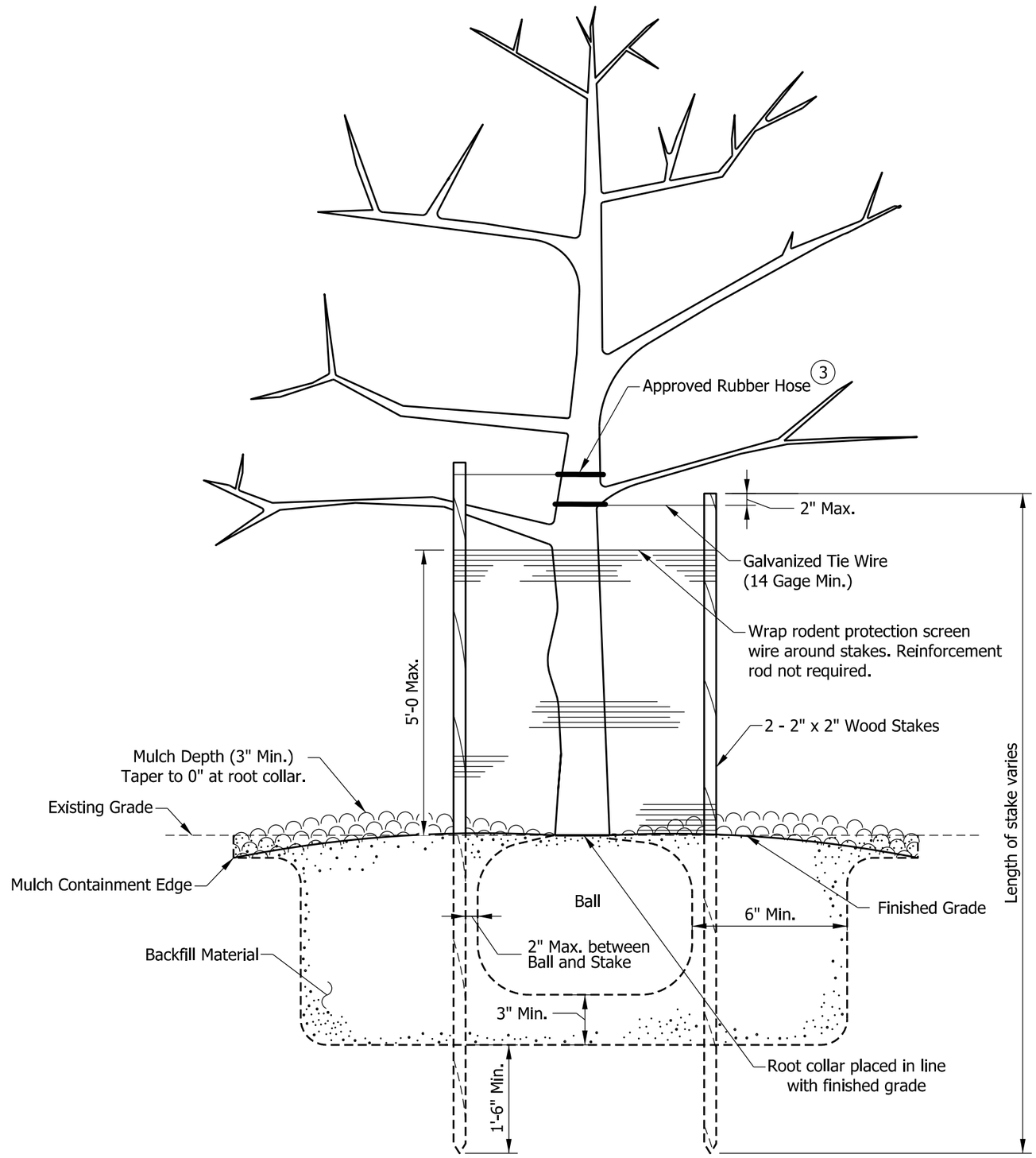

NOTES:

1. Tie wire securement points on tree shall be above the first or main branch.
2. Plastic coil type protective wrapping will be acceptable as an alternative to the screen wire and reinforcement rod method of tree protection or staked trees of less than 2 in. caliper.

(3) See Standard Drawing E 622-LSPL-11 for Rubber Hose Detail.

INDIANA DEPARTMENT OF TRANSPORTATION

PLANTING BALLED AND BURLAPPED TREE LESS THAN 1 1/4 IN. CALIPER

SEPTEMBER 2018

STANDARD DRAWING NO. E 622-LSPL-02

ELIZABETH W. PHILLIPS
REGISTERED
No. 10200124
STATE OF INDIANA
PROFESSIONAL ENGINEER

/s/ Elizabeth W. Phillips 03/20/18
DESIGN STANDARDS ENGINEER DATE

/s/ John Leckie 05/09/18
CHIEF ENGINEER DATE

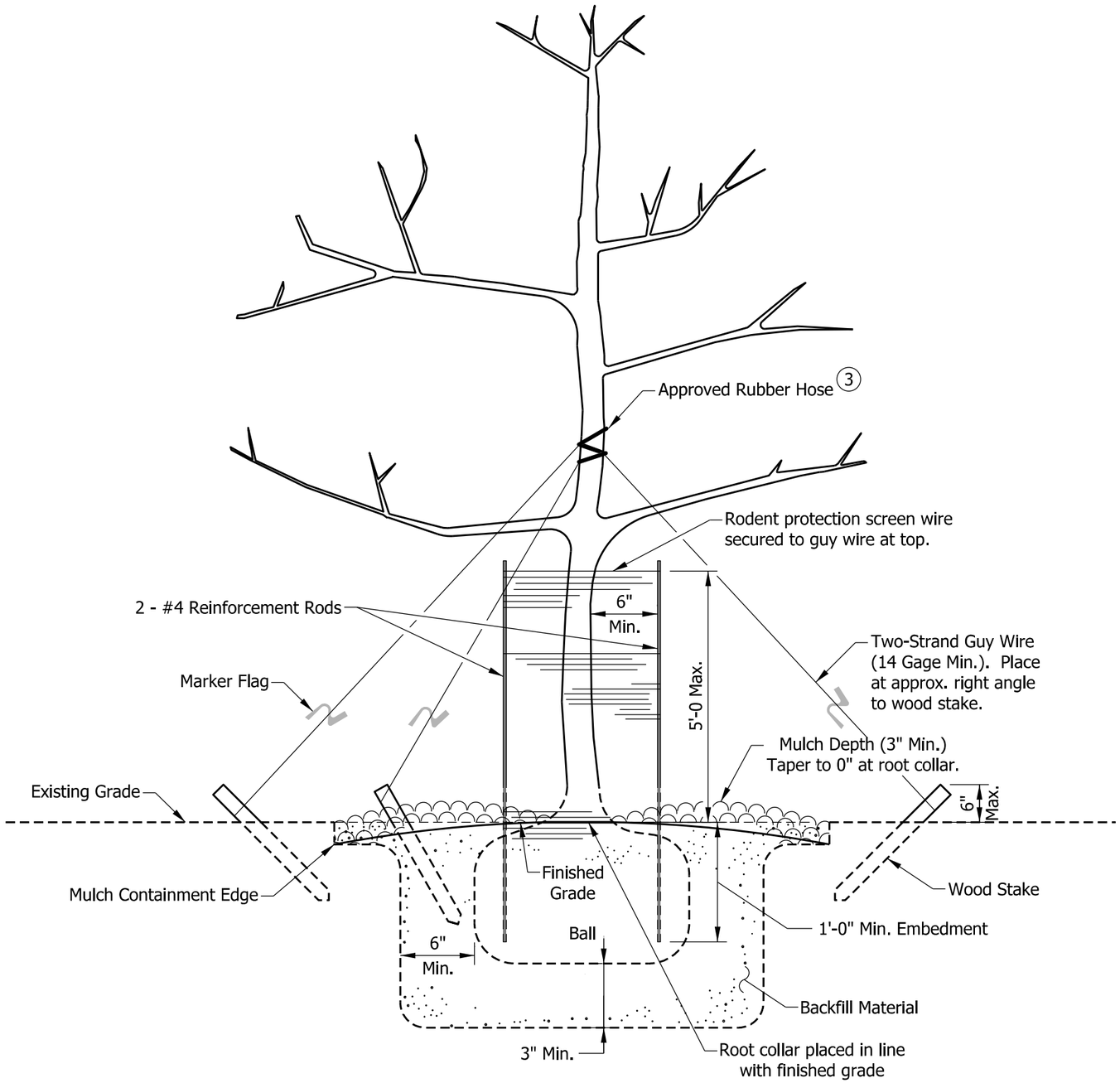

NOTES:

1. This detail applies to Evergreen Trees 48 in. tall and over with exception that screen wire protection shall not be required.
2. Plastic coil type protective wrapping will be acceptable as an alternative to the screen wire and reinforcement rod method of tree protection or staked trees of less than 2 in. caliper.

(3) See Standard Drawing E 622-LSPL-11 for Rubber Hose Detail.

INDIANA DEPARTMENT OF TRANSPORTATION

PLANTING BALLED AND BURLAPPED TREE 1 1/4 IN. CALIPER AND GREATER

SEPTEMBER 2018

STANDARD DRAWING NO. E 622-LSPL-03

ELIZABETH W. PHILLIPS
REGISTERED
No. 10200124
STATE OF INDIANA
PROFESSIONAL ENGINEER

/s/ Elizabeth W. Phillips 03/20/18
DESIGN STANDARDS ENGINEER DATE

/s/ John Leckie 05/09/18
CHIEF ENGINEER DATE

NOTES:

1. This detail applies to trees over 48 in. tall.

(2) See Standard Drawing E 622-LSPL-11 for Rubber Hose Detail.

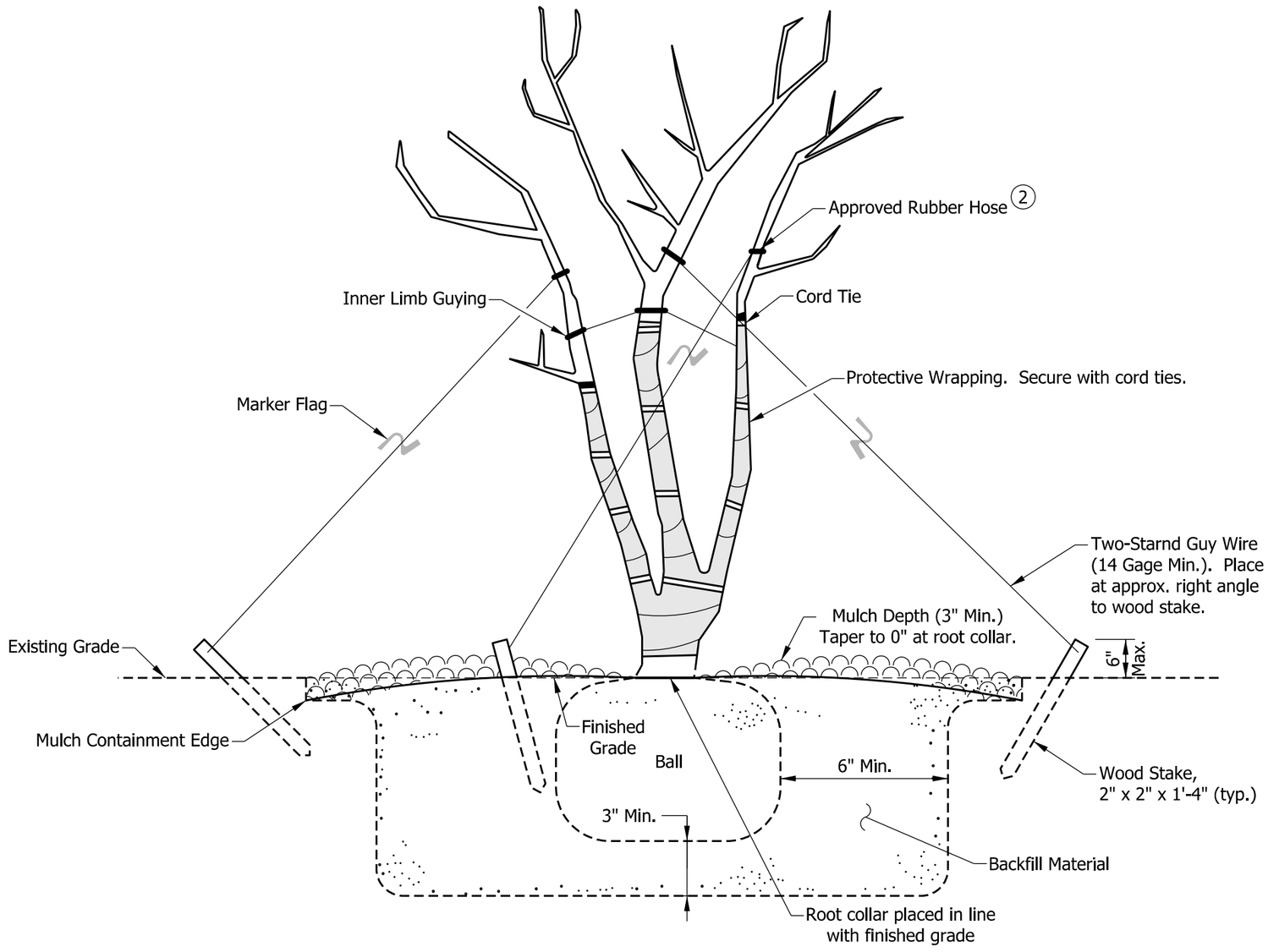

INDIANA DEPARTMENT OF TRANSPORTATION

PLANTING MULTI-STEM TREE

SEPTEMBER 2018

STANDARD DRAWING NO. E 622-LSPL-04

ELIZABETH W. PHILLIPS
REGISTERED
No. 10200124
STATE OF INDIANA
PROFESSIONAL ENGINEER

/s/ Elizabeth W. Phillips 03/20/18
DESIGN STANDARDS ENGINEER DATE

/s/ John Leckie 05/09/18
CHIEF ENGINEER DATE

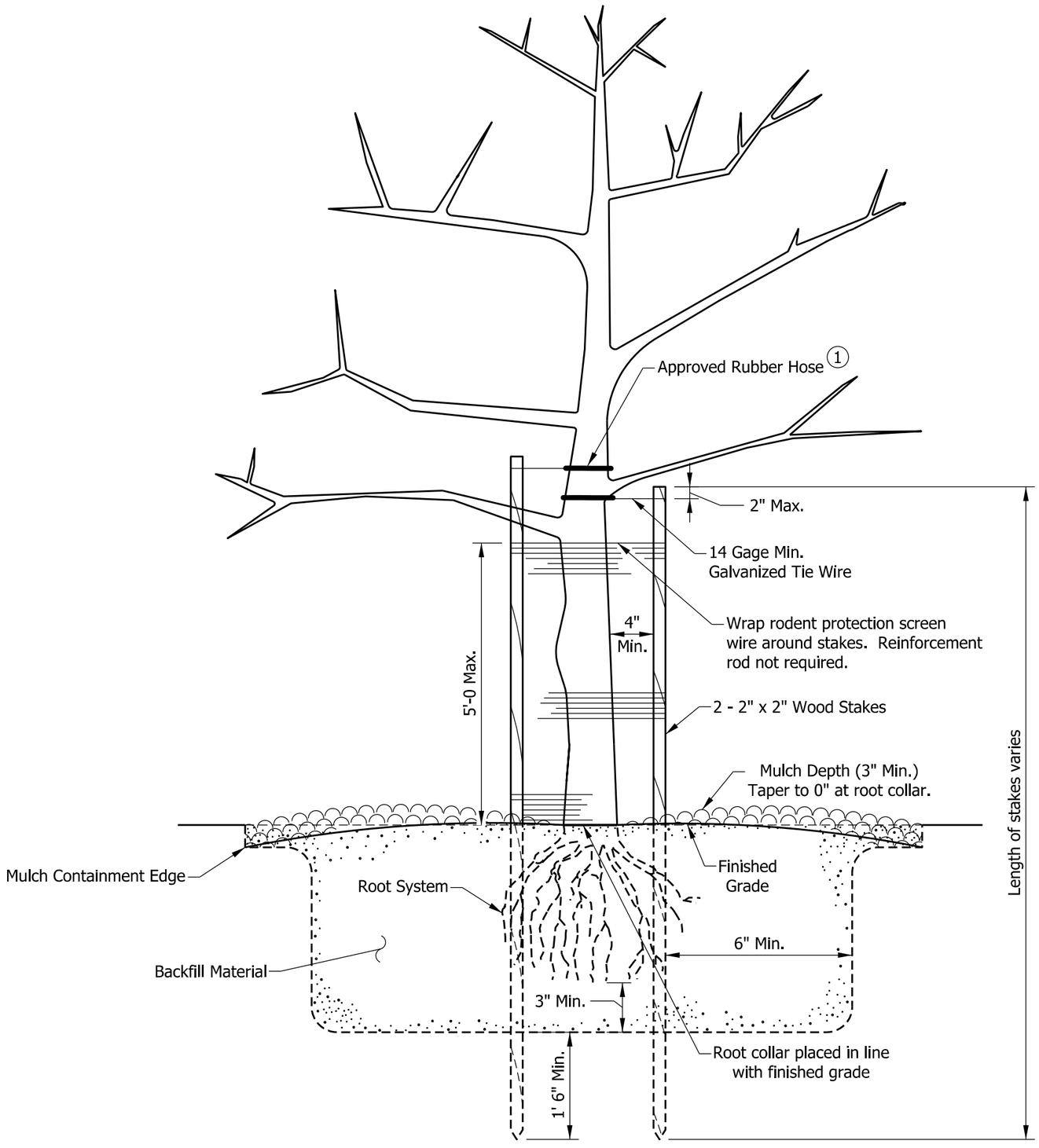

NOTES:

1. See Standard Drawing E 622-LSPL-11 for Rubber Hose Detail.

INDIANA DEPARTMENT OF TRANSPORTATION

PLANTING BARE ROOT
TREE

SEPTEMBER 2018

STANDARD DRAWING NO. E 622-LSPL-05

ELIZABETH W. PHILLIPS
REGISTERED
No.
10200124
STATE OF
INDIANA
PROFESSIONAL ENGINEER

/s/ Elizabeth W. Phillips 03/20/18
DESIGN STANDARDS ENGINEER DATE

/s/ John Leckie 05/09/18
CHIEF ENGINEER DATE

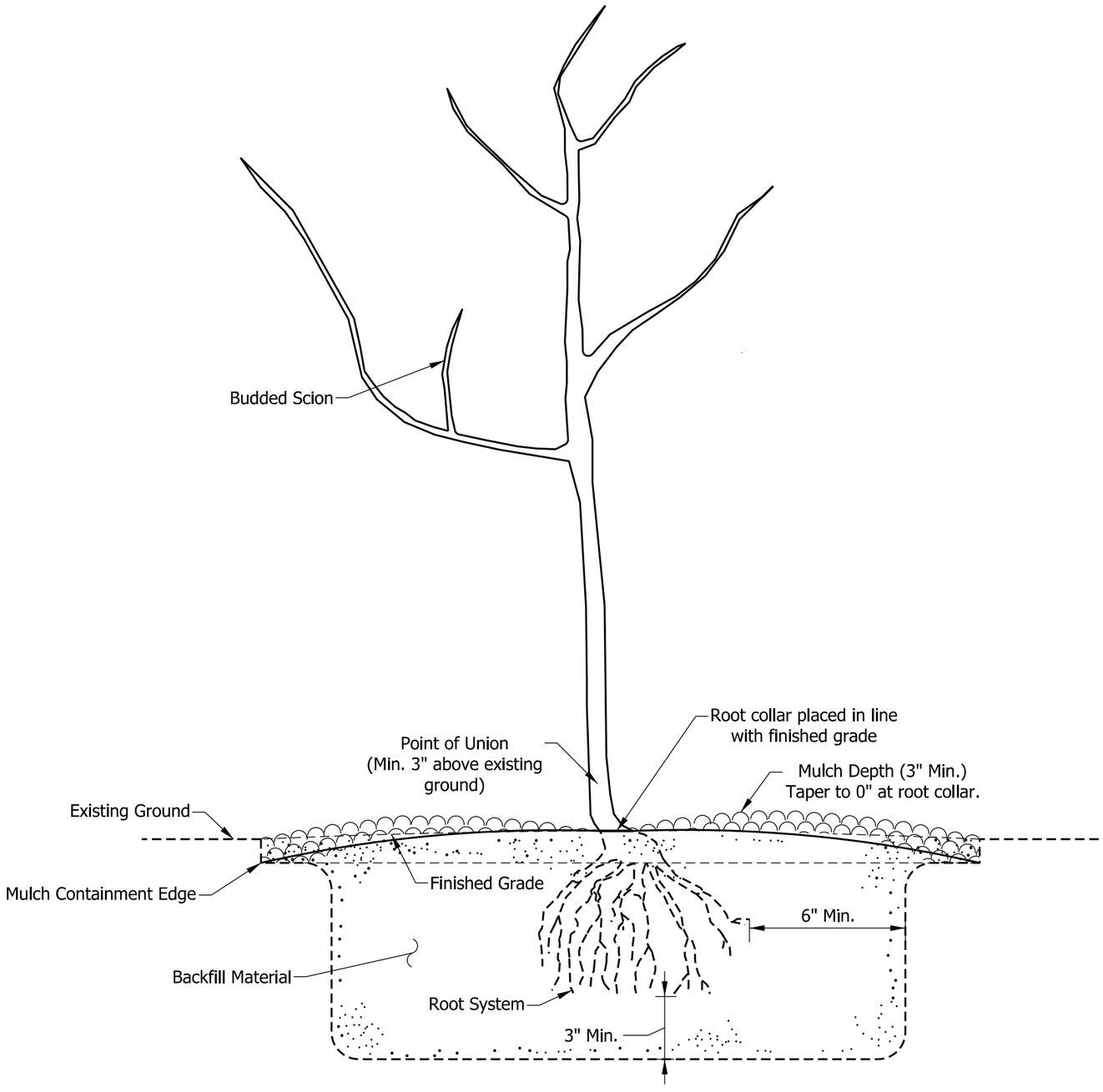

NOTES:

1. This detail applies to planting of grafted bare root system.

INDIANA DEPARTMENT OF TRANSPORTATION

PLANTING GRAFTED TREE

SEPTEMBER 2018

STANDARD DRAWING NO. E 622-LSPL-06

ELIZABETH W. PHILLIPS
REGISTERED
No. 10200124
STATE OF INDIANA
PROFESSIONAL ENGINEER

/s/ Elizabeth W. Phillips 03/20/18
DESIGN STANDARDS ENGINEER DATE

/s/ John Leckie 05/09/18
CHIEF ENGINEER DATE

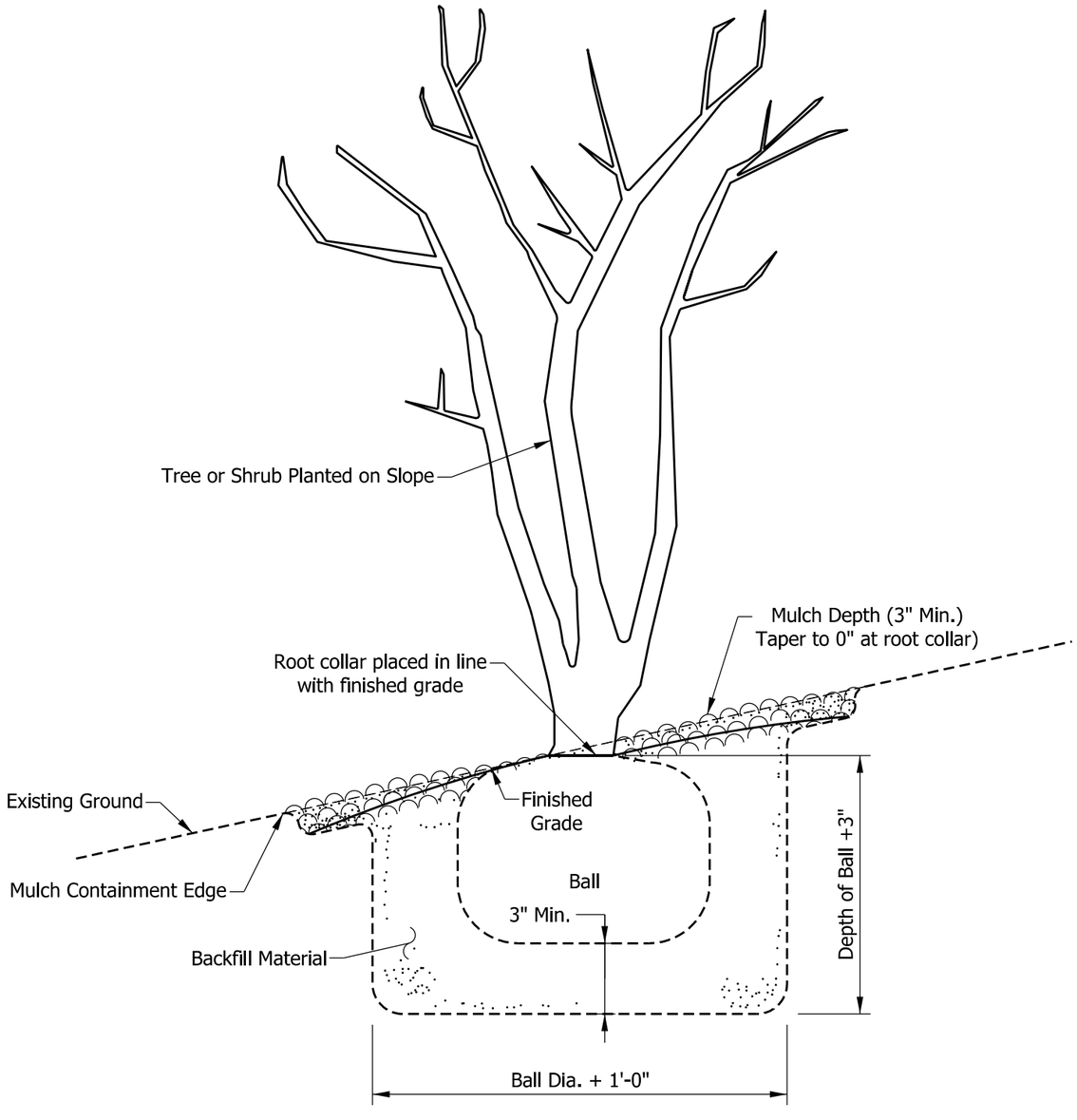

INDIANA DEPARTMENT OF TRANSPORTATION

PLANTING ON SLOPE

SEPTEMBER 2018

STANDARD DRAWING NO. E 622-LSPL-07

ELIZABETH W. PHILLIPS
REGISTERED
No.
10200124
STATE OF
INDIANA
PROFESSIONAL ENGINEER

/s/ Elizabeth W. Phillips 03/20/18
DESIGN STANDARDS ENGINEER DATE

/s/ John Leckie 05/09/18
CHIEF ENGINEER DATE

NOTES:

1. This detail applies to prostrate shrubs and ground cover in 3-gallon containers or smaller. A prostrate shrub is a woody plant where most of the branches lie on or just above the ground.

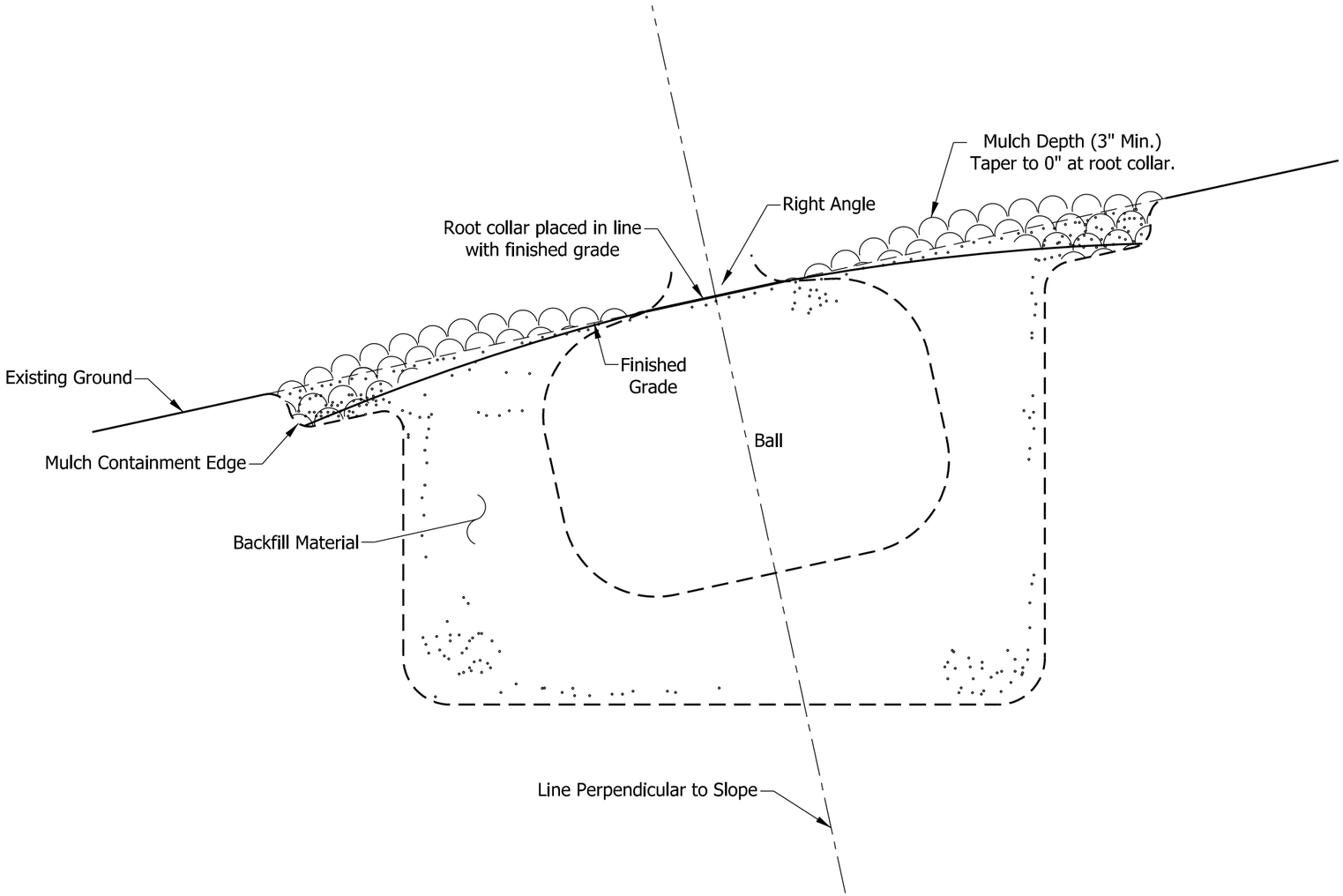

INDIANA DEPARTMENT OF TRANSPORTATION

PLANTING ON SLOPE

SEPTEMBER 2018

STANDARD DRAWING NO. E 622-LSPL-08

ELIZABETH W. PHILLIPS
REGISTERED
No.
10200124
STATE OF
INDIANA
PROFESSIONAL ENGINEER

/s/ Elizabeth W. Phillips 03/20/18
DESIGN STANDARDS ENGINEER DATE

/s/ John Leckie 05/09/18
CHIEF ENGINEER DATE

NOTES:

1. Take specified mulch depth to edge of bed over 3 ft distance from center of outer plant.
2. See Standard Drawing E 622-LSPL-10 for typical plan of shrub bed.

(3) Where mulch and tilled area do not extend to the right-of-way fence, provide a minimum 2 ft for grass and weed control.

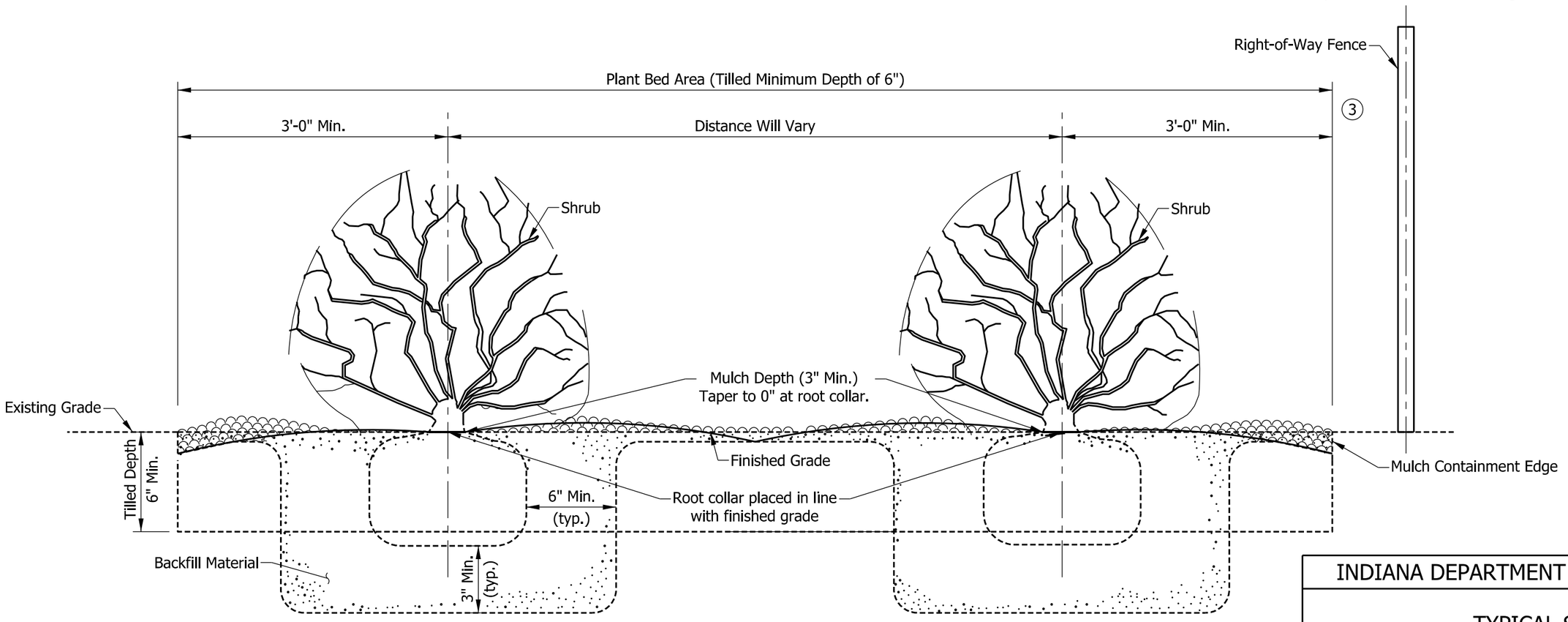

INDIANA DEPARTMENT OF TRANSPORTATION

TYPICAL SECTION
OF SHRUB BED

SEPTEMBER 2018

STANDARD DRAWING NO. E 622-LSPL-09

ELIZABETH W. PHILLIPS
REGISTERED
No.
10200124
STATE OF
INDIANA
PROFESSIONAL ENGINEER

/s/ Elizabeth W. Phillips 03/20/18
DESIGN STANDARDS ENGINEER DATE

/s/ John Leckie 05/09/18
CHIEF ENGINEER DATE

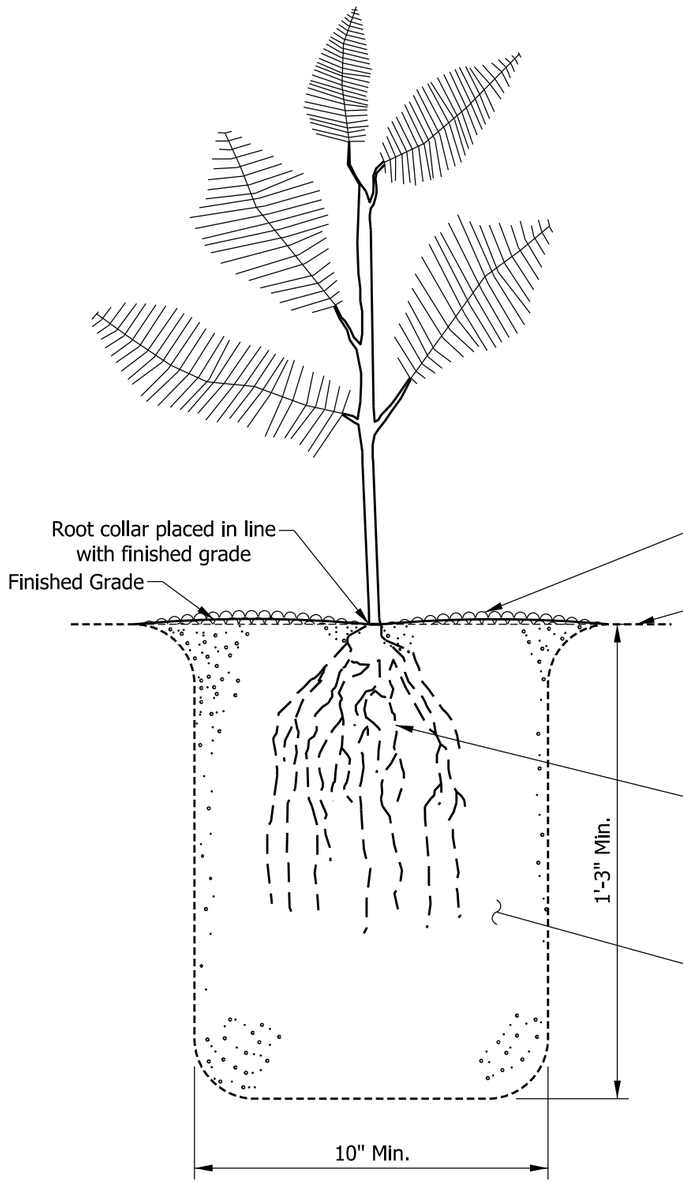

SEEDLING VARIETY ON LEVEL LAND

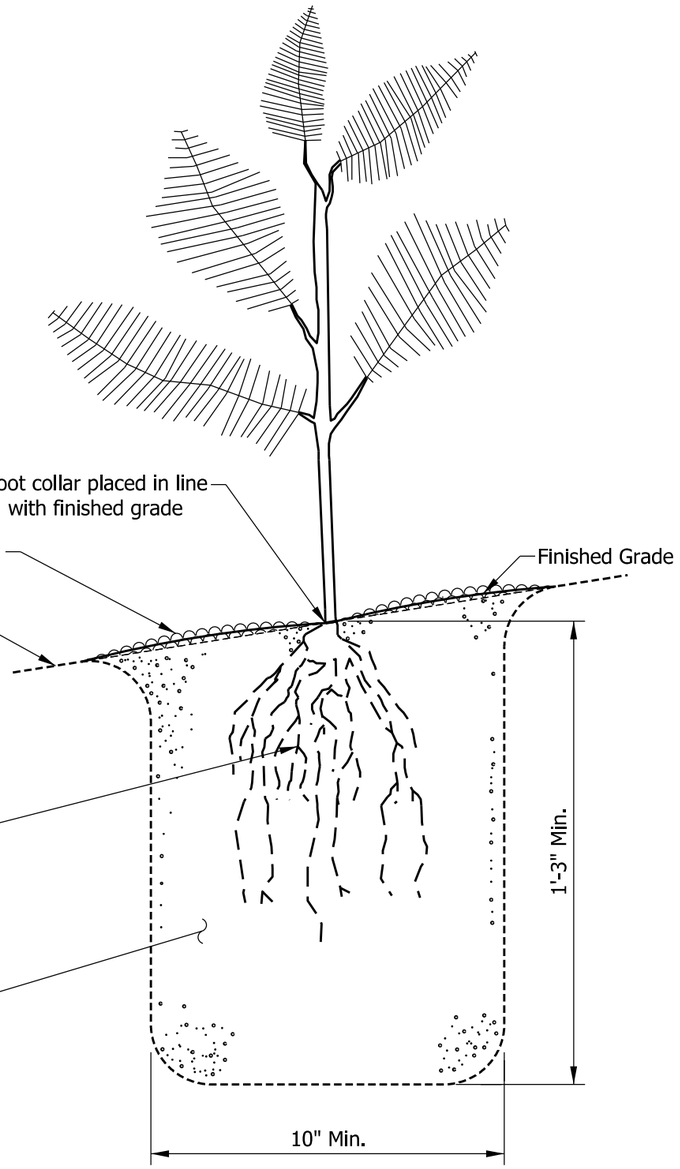

SEEDLING VARIETY ON SLOPE

INDIANA DEPARTMENT OF TRANSPORTATION

PLANTING SEEDLING
VARIETIES

SEPTEMBER 2018

STANDARD DRAWING NO. E 622-LSPL-10

ELIZABETH W. PHILLIPS
REGISTERED
No.
10200124
STATE OF
INDIANA
PROFESSIONAL ENGINEER

/s/ Elizabeth W. Phillips *03/20/18*
DESIGN STANDARDS ENGINEER DATE

/s/ John Leckie *05/09/18*
CHIEF ENGINEER DATE

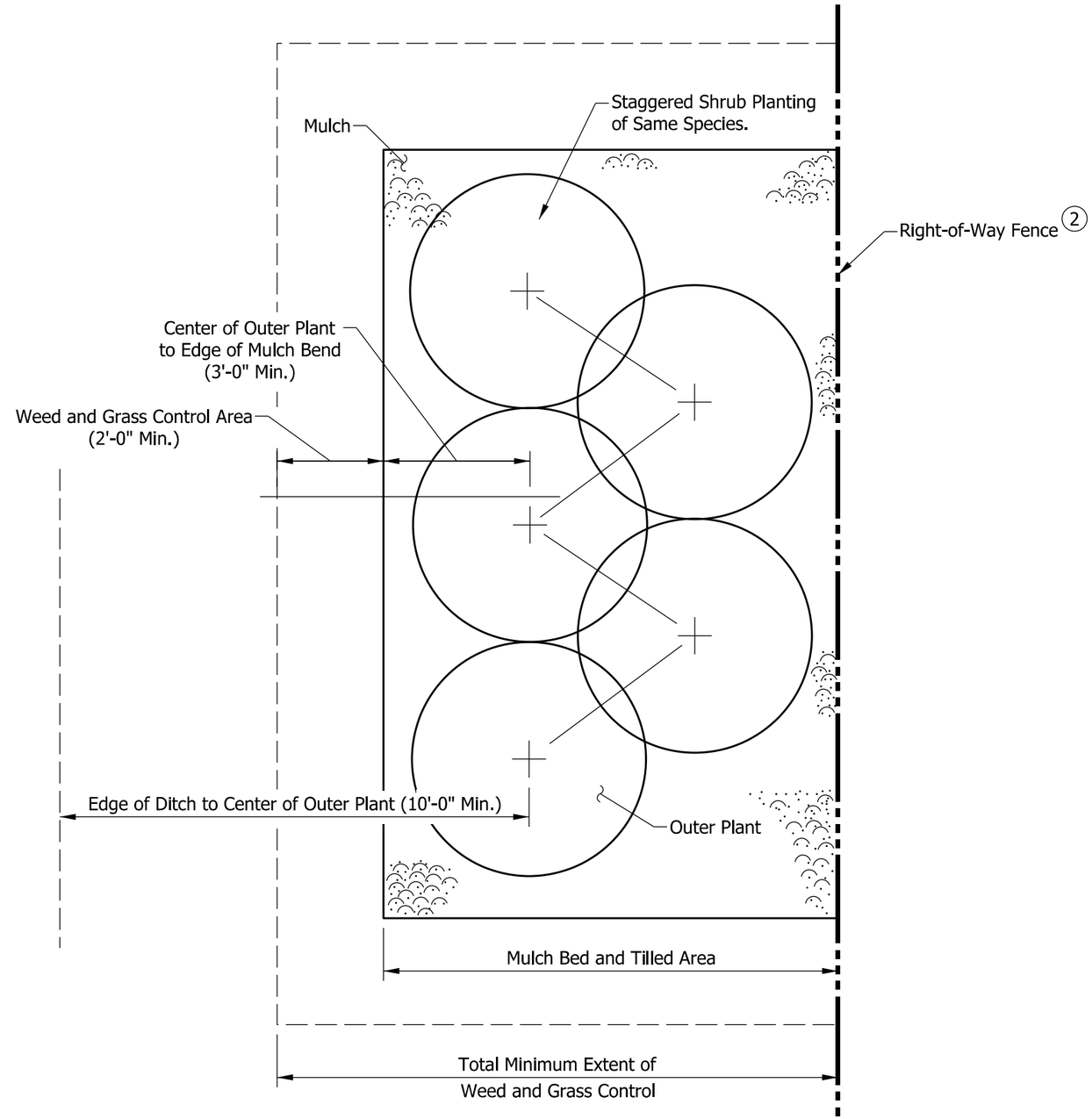

NOTES:

1. Specific variations on shrub bed configurations and layout will be shown on plans. Plans will show exceptions to 10 ft minimum distance from ditch to center of outer plants.

(2) Where mulch and tilled area do not extend to right-of -way fence, provide a minimum of 2 ft for grass and weed control.

INDIANA DEPARTMENT OF TRANSPORTATION

TYPICAL PLAN OF SHRUB BED

SEPTEMBER 2018

STANDARD DRAWING NO. E 622-LSPL-11

ELIZABETH W. PHILLIPS
REGISTERED
No. 10200124
STATE OF INDIANA
PROFESSIONAL ENGINEER

/s/ Elizabeth W. Phillips 03/20/18
DESIGN STANDARDS ENGINEER DATE

/s/ John Leckie 05/09/18
CHIEF ENGINEER DATE

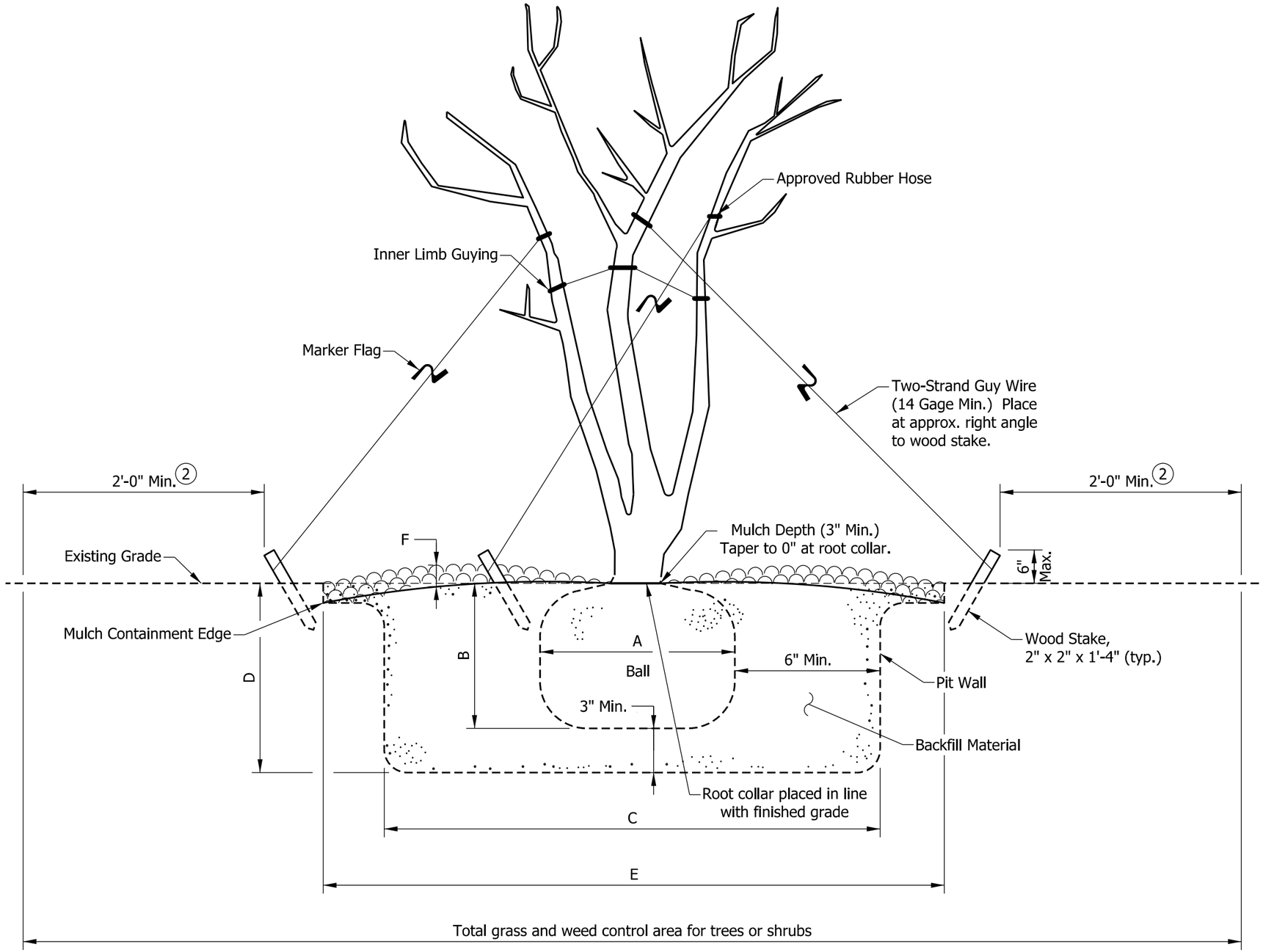

NOTES:

1. See master plant list for specific dimensions applied to individual plants.

(2) 2 ft minimum distance for weed and grass control applies to zone beyond stakes or mulch bed.
A = Diameter of ball
B = Depth of ball
C = Diameter of pit
D = Depth of pit
E = Diameter of mulch bed
F = Depth of mulch bed

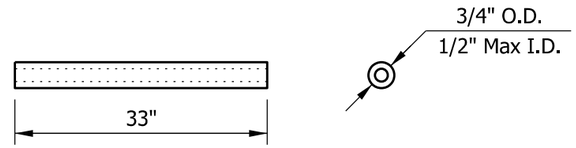

RUBBER HOSE DETAIL

INDIANA DEPARTMENT OF TRANSPORTATION

COMMONLY USED DIMENSIONS

SEPTEMBER 2018

STANDARD DRAWING NO. E 622-LSPL-12

ELIZABETH W. PHILLIPS
REGISTERED
No. 10200124
STATE OF INDIANA
PROFESSIONAL ENGINEER

/s/ Elizabeth W. Phillips 03/20/18
DESIGN STANDARDS ENGINEER DATE

/s/ John Leckie 05/09/18
CHIEF ENGINEER DATE

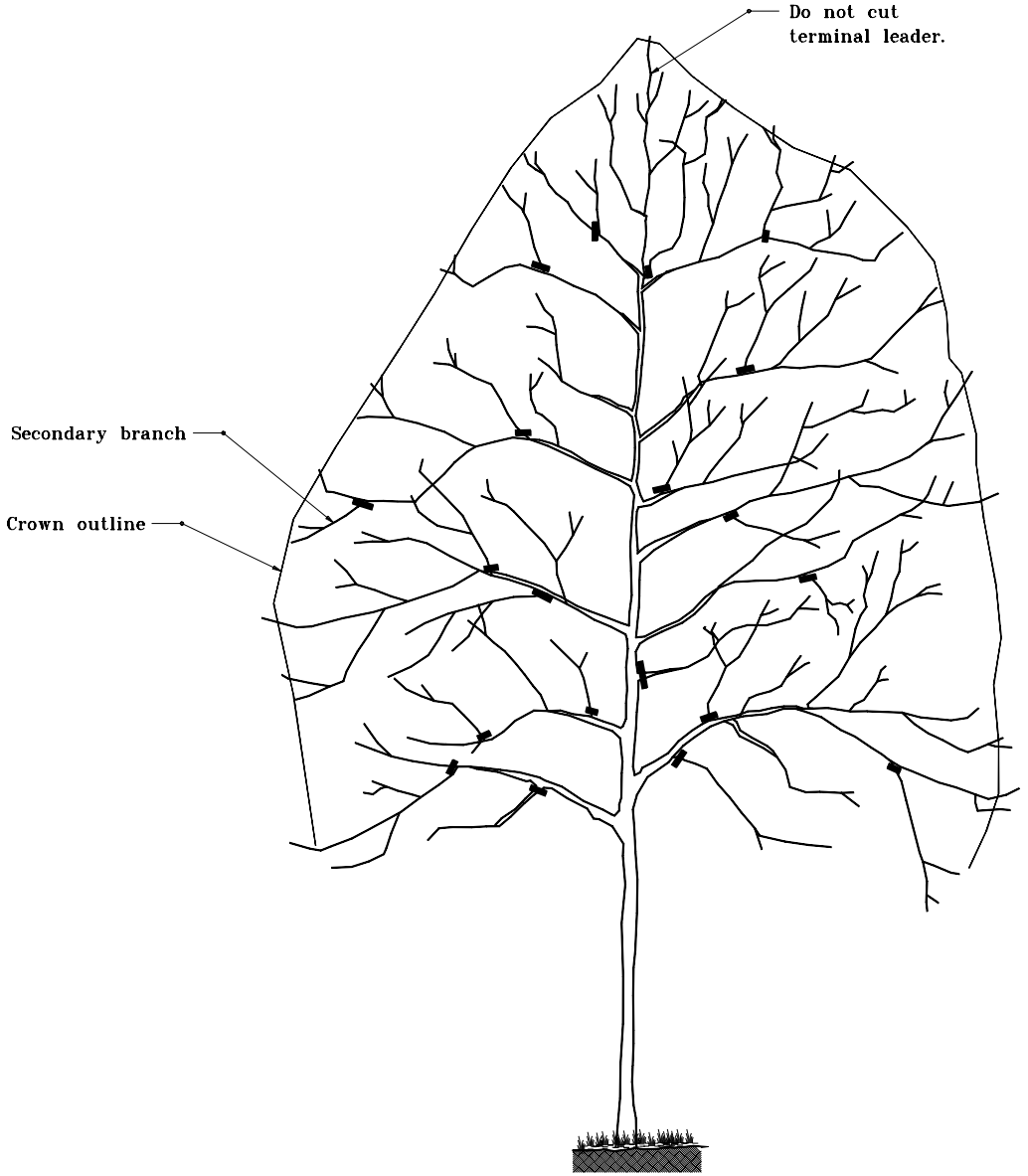

GENERAL NOTES

1. Pruning cuts shall be made as close as possible to remaining branch and in direction of symbol for cuts (▬).

2. Cut back secondary branching to reduce foliage by a minimum of 1/3 to a maximum of 1/2.

INDIANA DEPARTMENT OF TRANSPORTATION

TREE PRUNING
TALL SHADE TREE

APRIL 1995

STANDARD DRAWING NO. **E 622-LSPR-01**

ANTHONY L. UREMOVICH REGISTERED No. 18095 STATE OF INDIANA PROFESSIONAL ENGINEER

DESIGN STANDARDS ENGINEER

DETAILS PLACED IN THIS FORMAT	11-15-99
/s/ Anthony L. Uremovich DESIGN STANDARDS ENGINEER	11-15-99 DATE
/s/ Firooz Zandi CHIEF HIGHWAY ENGINEER	11-15-99 DATE
ORIGINALLY APPROVED	4-01-95

GENERAL NOTES

1. Pruning cuts shall be made as close as possible to remaining branch and in direction of symbol for cuts (▬).

2. Cut back secondary branching to reduce foliage by a minimum of 1/3 to a maximum of 1/2.

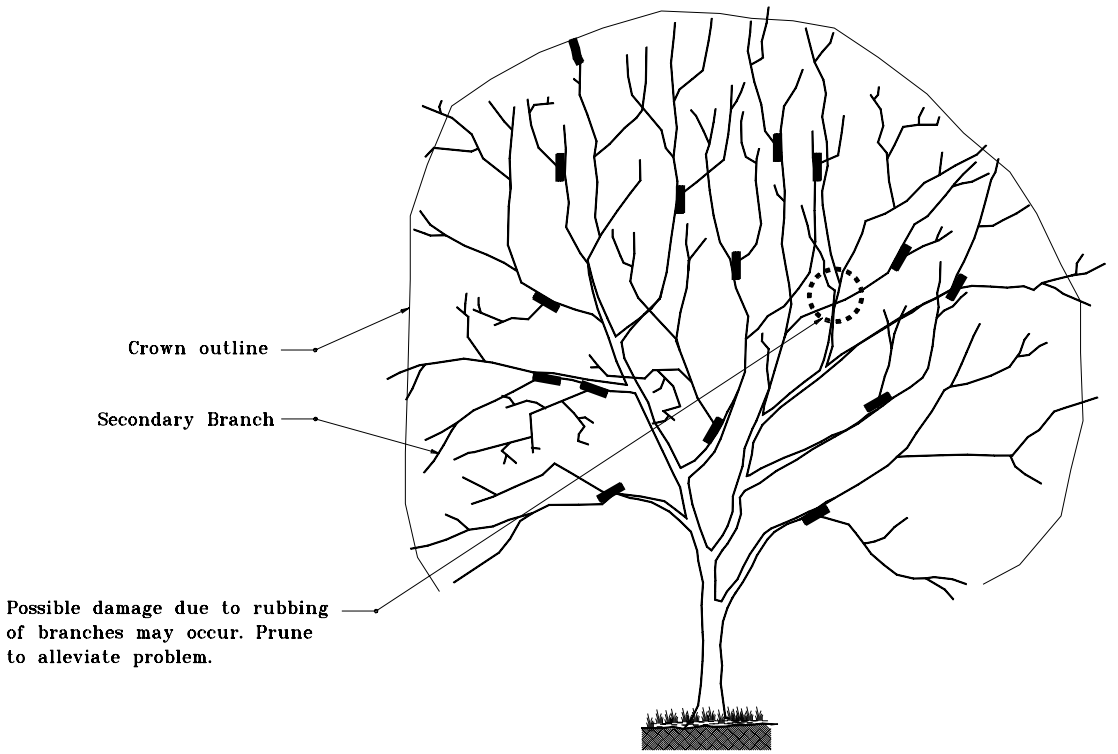

INDIANA DEPARTMENT OF TRANSPORTATION

TREE PRUNING
INTERMEDIATE TREE–ONE STEM

APRIL 1995

STANDARD DRAWING NO. **E 622–LSPR–02**

ANTHONY L. UREMOVICH REGISTERED No. 18095 STATE OF INDIANA PROFESSIONAL ENGINEER

DESIGN STANDARDS ENGINEER

DETAILS PLACED IN THIS FORMAT	11-15-99
/s/ Anthony L. Uremovich DESIGN STANDARDS ENGINEER	11-15-99 DATE
/s/ Firooz Zandi CHIEF HIGHWAY ENGINEER	11-15-99 DATE
ORIGINALLY APPROVED	4-01-95

GENERAL NOTES

1. Pruning cuts shall be made as close as possible to remaining branch and in direction of symbol for cuts (▬).

2. Cut back secondary branching to reduce foliage by a minimum of 1/3 to a maximum of 1/2

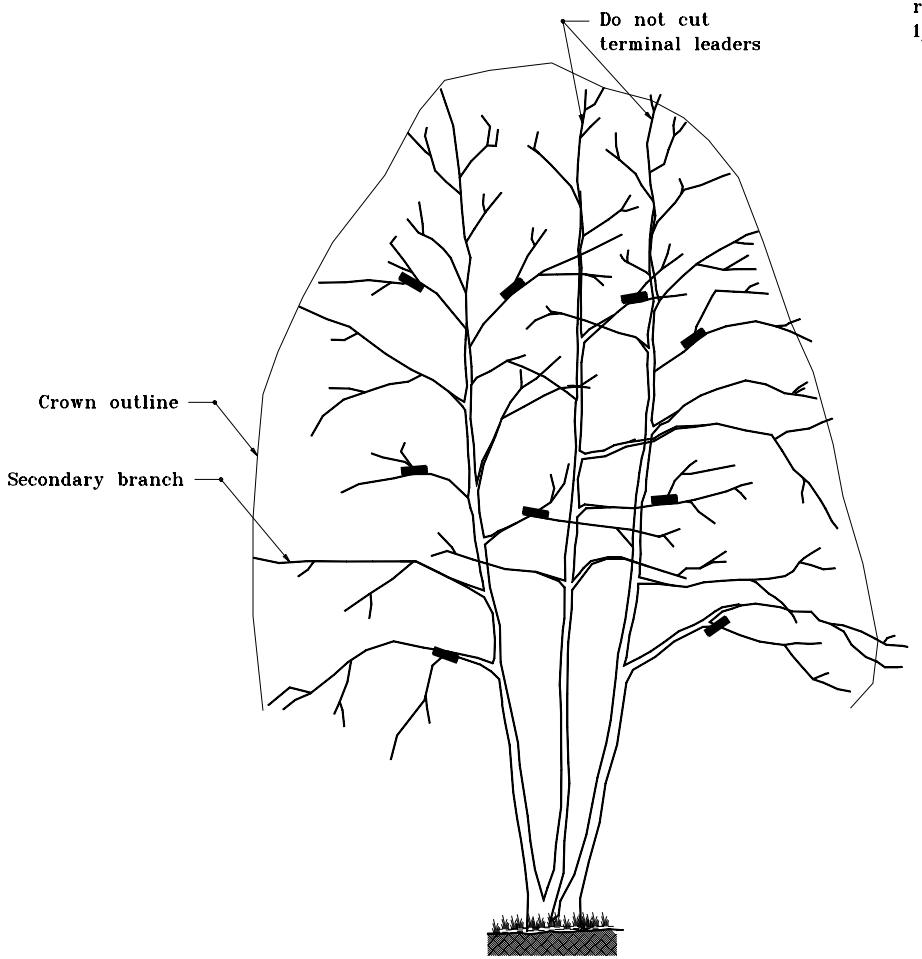

INDIANA DEPARTMENT OF TRANSPORTATION

TREE PRUNING
INTERMED. TREE–MULT. STEM

APRIL 1995

STANDARD DRAWING NO. **E 622–LSPR–03**

ANTHONY L. UREMOVICH REGISTERED No. 18095 STATE OF INDIANA PROFESSIONAL ENGINEER

DESIGN STANDARDS ENGINEER

DETAILS PLACED IN THIS FORMAT 11-15-99

/s/ Anthony L. Uremovich 11-15-99
DESIGN STANDARDS ENGINEER DATE

/s/ Firooz Zandi 11-15-99
CHIEF HIGHWAY ENGINEER DATE

ORIGINALLY APPROVED 4-01-95

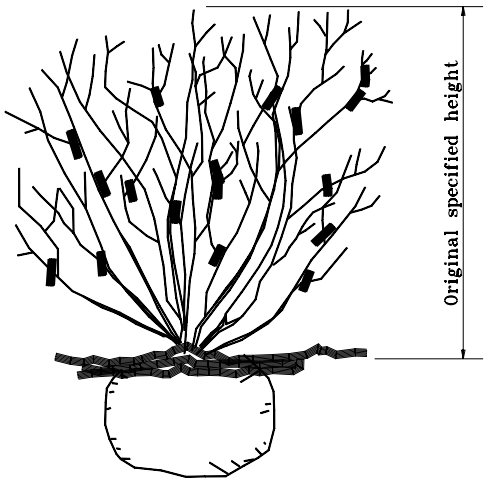

BALLED & BURLAPPED SHRUB

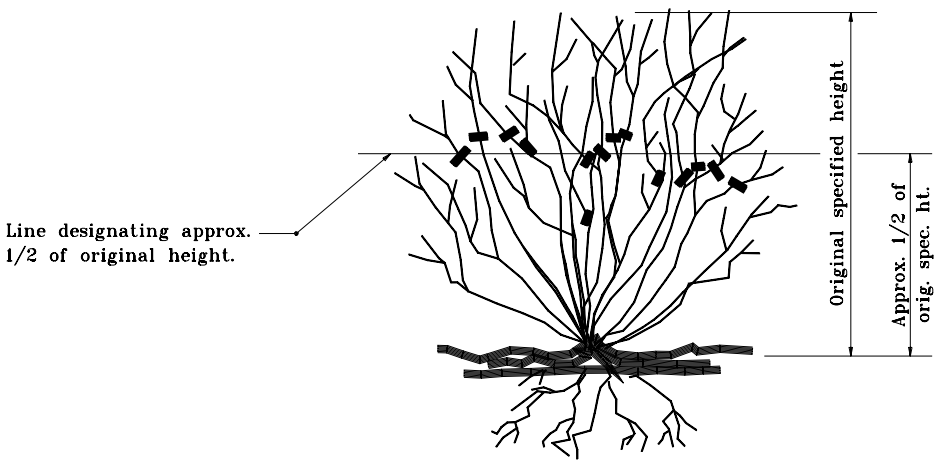

BARE ROOT SHRUB

GENERAL NOTES

1. Pruning operations for balled & burlapped stock shall maintain the natural shape and characteristic branching pattern.

2. Cut back secondary branching to reduce foliage by a minimum of 1/3 to a maximum of 1/2.

3. Budding variations and different growth characteristic of the various shrub species may alter pruning procedures. See suggested procedure on Standard Drawing E 622-LSPR-05 which applies to most shrub species.

INDIANA DEPARTMENT OF TRANSPORTATION

SHRUB PRUNING

APRIL 1995

STANDARD DRAWING NO. **E 622-LSPR-04**

ANTHONY L. UREMOVICH REGISTERED No. 18095 STATE OF INDIANA PROFESSIONAL ENGINEER

DESIGN STANDARDS ENGINEER

DETAILS PLACED IN THIS FORMAT	11-15-99
/s/ Anthony L. Uremovich DESIGN STANDARDS ENGINEER	11-15-99 DATE
/s/ Firooz Zandi CHIEF HIGHWAY ENGINEER	11-15-99 DATE
ORIGINALLY APPROVED	4-01-95

GENERAL NOTES

(1) See Standard Drawing E 622-LSPL-04 for Rubber Hose Detail.

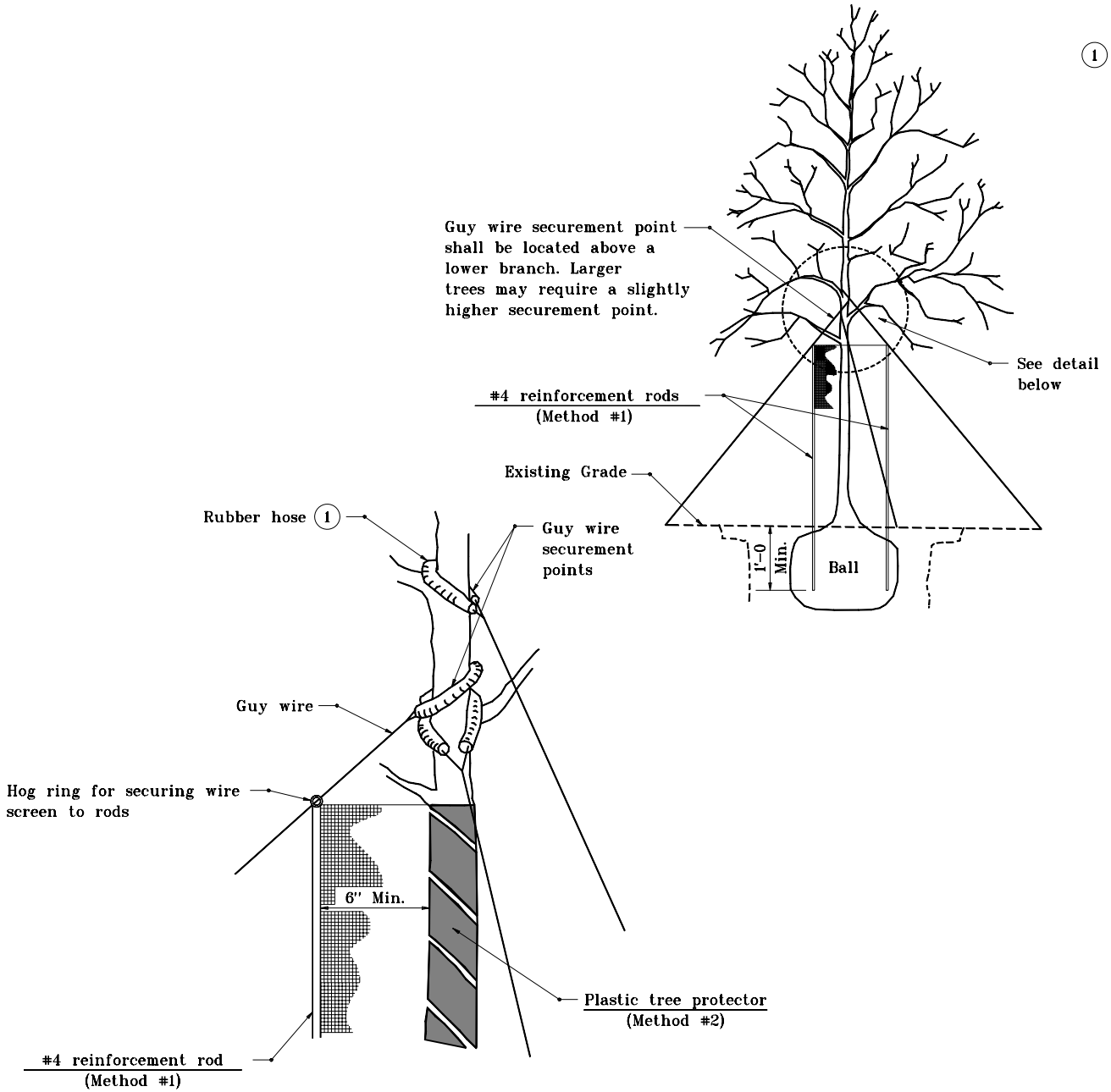

DETAIL APPLIES TO TREES 1¼" CALIPER AND GREATER

INDIANA DEPARTMENT OF TRANSPORTATION

TREE PROTECTION

APRIL 1995

STANDARD DRAWING NO. **E 622-LSPR-05**

ANTHONY L. UREMOVICH REGISTERED No. 18095 STATE OF INDIANA PROFESSIONAL ENGINEER

DESIGN STANDARDS ENGINEER

DETAILS PLACED IN THIS FORMAT	11-15-99
/s/ Anthony L. Uremovich	11-15-99
DESIGN STANDARDS ENGINEER	DATE
/s/ Firooz Zandi	11-15-99
CHIEF HIGHWAY ENGINEER	DATE
ORIGINALLY APPROVED	4-01-95

GENERAL NOTES

(1) Cut at bud starts opposite the base of bud and slants up toward top of bud.

(2) Cut at secondary branch shall be parallel to remaining branch.

Improper Cut
Pruning cut too slanting (too much heartwood is exposed). Die-back will occur.

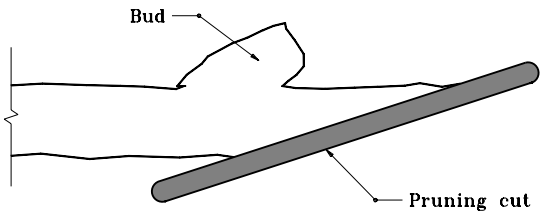

Improper Cut
Pruning cut too far beyond bud. Die-back will occur.

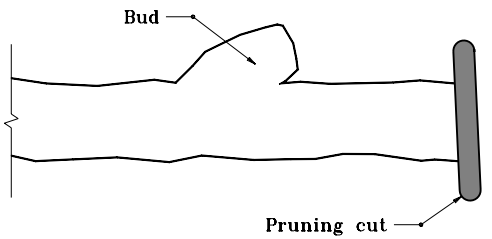

Improper Cut
Pruning cut too close to bud (will interfere with bud growth).

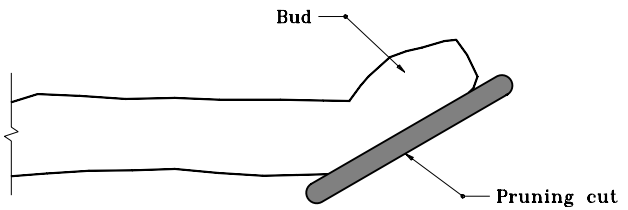

Suggested Cuts

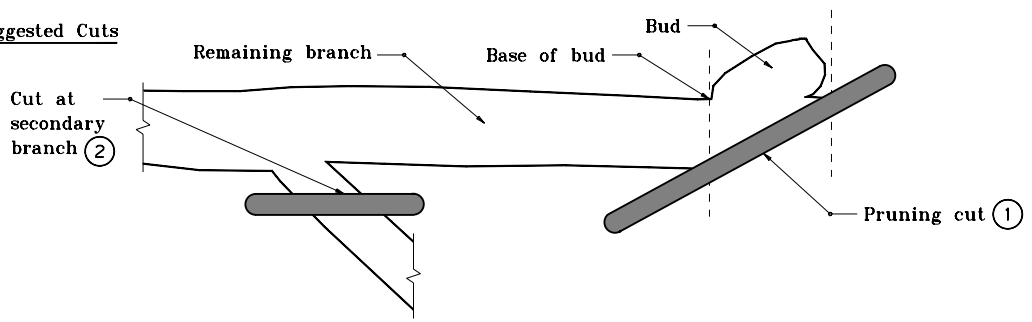

INDIANA DEPARTMENT OF TRANSPORTATION

PRUNING PROCEDURE TREES AND SHRUBS

APRIL 1995

STANDARD DRAWING NO. **E 622-LSPR-06**

ANTHONY L. UREMOVICH REGISTERED No. 18095 STATE OF INDIANA PROFESSIONAL ENGINEER

DESIGN STANDARDS ENGINEER

DETAILS PLACED IN THIS FORMAT	11-15-99
/s/ Anthony L. Uremovich, DESIGN STANDARDS ENGINEER	11-15-99
/s/ Firooz Zandi, CHIEF HIGHWAY ENGINEER	11-15-99
ORIGINALLY APPROVED	4-01-95

GENERAL NOTES

1. This is a suggested method for pruning heavier limbs. If these limbs are not properly cut, damage to adjacent portions of the tree may occur.

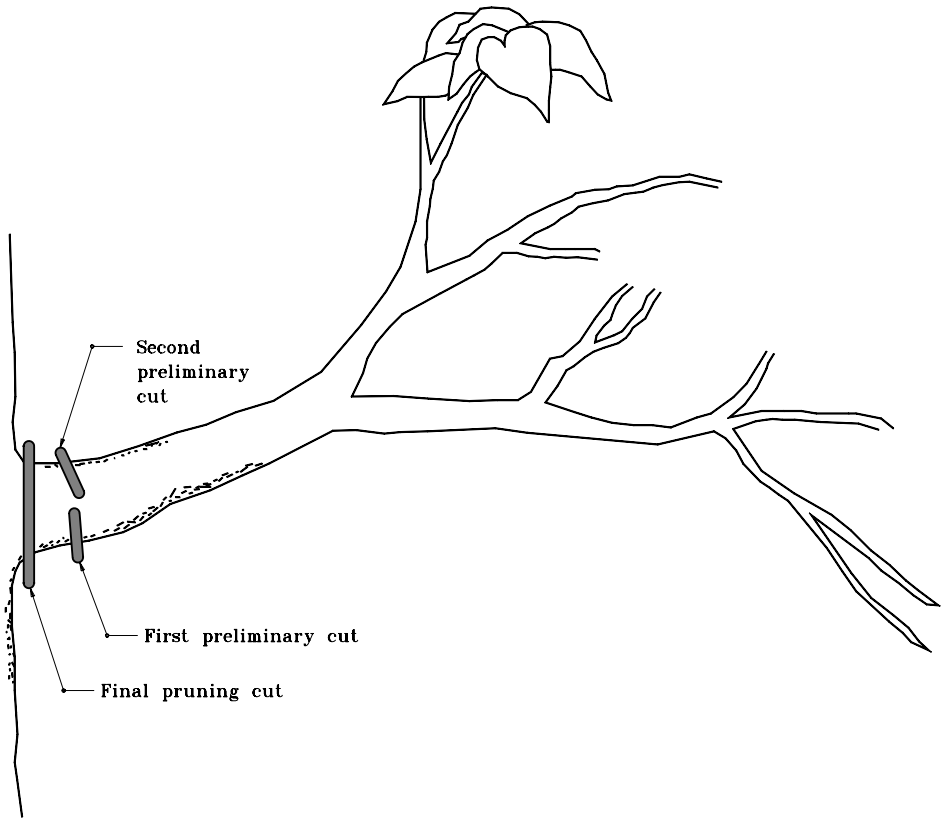

INDIANA DEPARTMENT OF TRANSPORTATION

PRUNING PROCEDURE HEAVIER LIMBS

APRIL 1995

STANDARD DRAWING NO. **E 622-LSPR-07**

ANTHONY L. UREMOVICH REGISTERED No. 18095 STATE OF INDIANA PROFESSIONAL ENGINEER

DESIGN STANDARDS ENGINEER

DETAILS PLACED IN THIS FORMAT	11-15-99
/s/ Anthony L. Uremovich	11-15-99
DESIGN STANDARDS ENGINEER	DATE
/s/ Firooz Zandi	11-15-99
CHIEF HIGHWAY ENGINEER	DATE
ORIGINALLY APPROVED	4-01-95

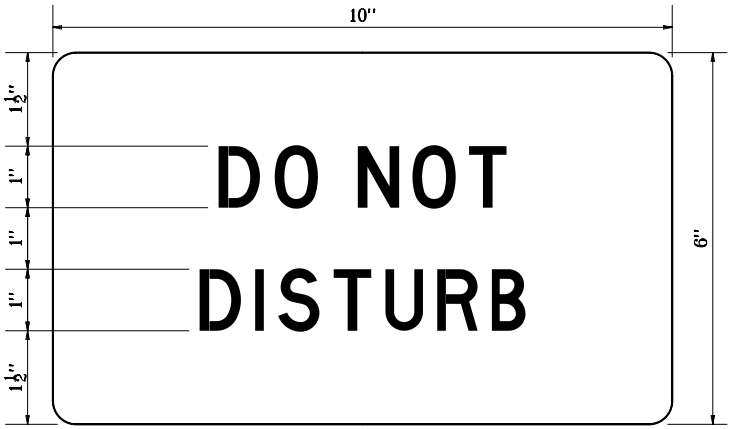

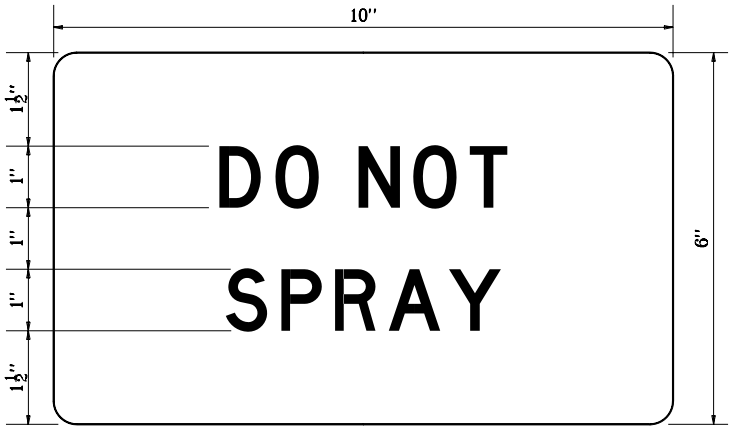

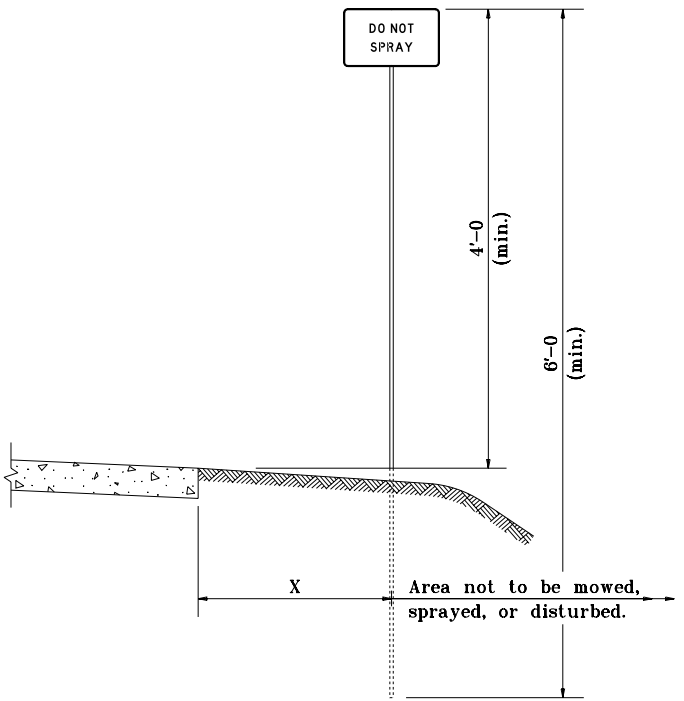

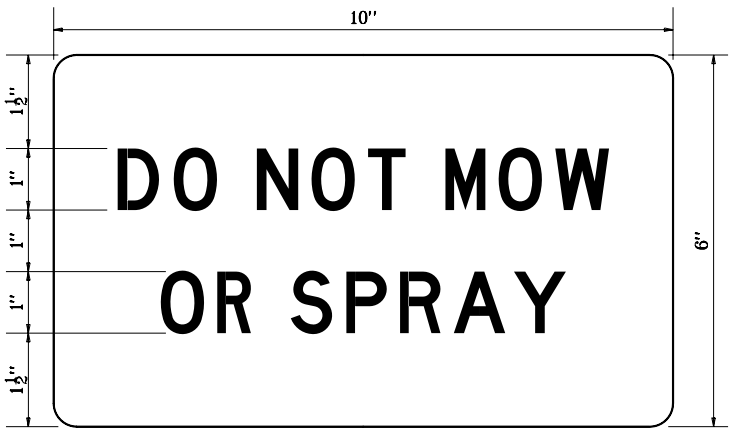

X = Approximate distance from edge of paved shoulder to edge of area not to be mowed, sprayed, or disturbed.

INDIANA DEPARTMENT OF TRANSPORTATION

LANDSCAPE SIGNS

JUNE 1996

STANDARD DRAWING NO. **E 622-LSSN-01**

ANTHONY L. UREMOVICH REGISTERED No. 18095 STATE OF INDIANA PROFESSIONAL ENGINEER

DESIGN STANDARDS ENGINEER

DETAILS PLACED IN THIS FORMAT 11-15-99

/s/ Anthony L. Uremovich 11-15-99
DESIGN STANDARDS ENGINEER DATE

/s/ Firooz Zandi 11-15-99
CHIEF HIGHWAY ENGINEER DATE

ORIGINALLY APPROVED 6-03-96

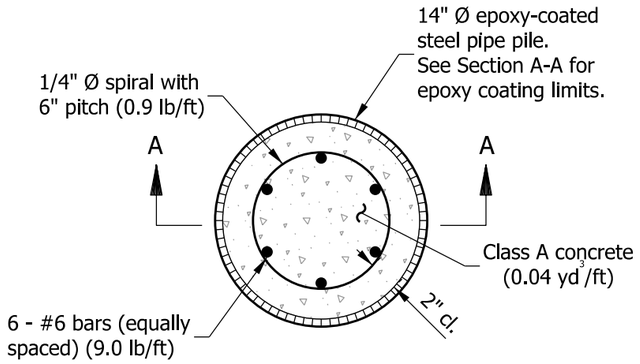

REINFORCED-CONCRETE FILLED EPOXY-COATED STEEL PIPE PILE ENCASEMENT PLAN VIEW

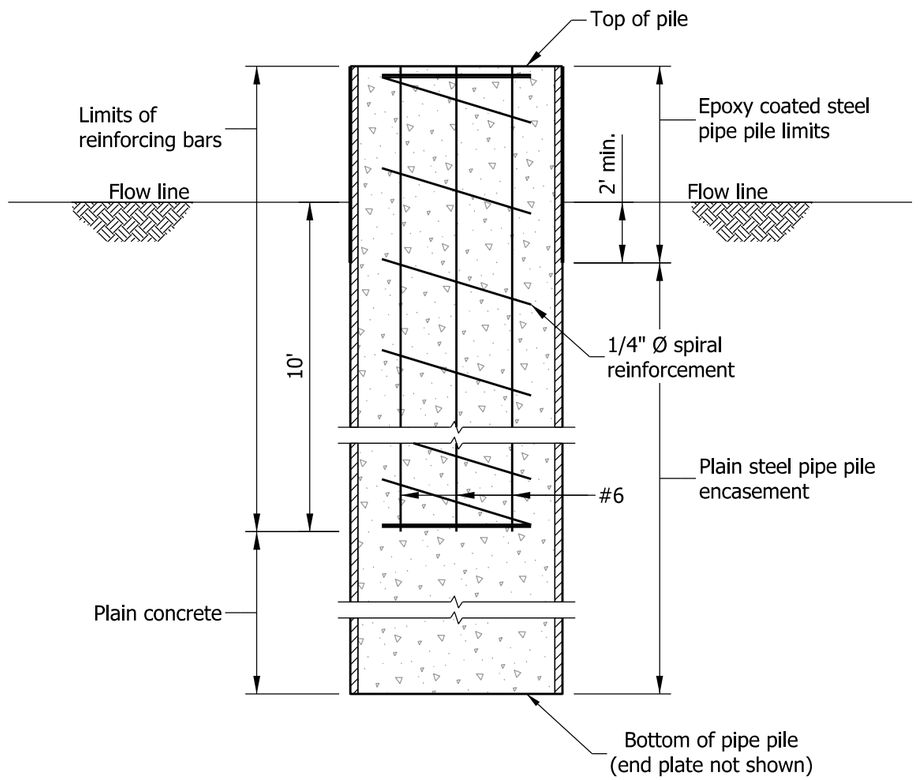

SECTION A-A

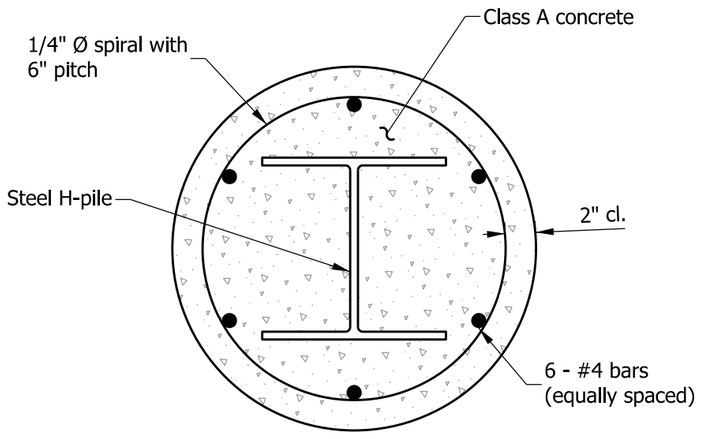

STEEL H - PILES
REINFORCED-CONCRETE ENCASEMENT PLAN VIEW

TABLE OF MATERIALS			
Steel H-Pile designation	Minimum pile diameter	Reinforcing bars, lb/ft	Class A concrete, yd³/ft
HP 14	2'-3"	5.8	0.12
HP 12	2'-0"	5.6	0.10
HP 10	1'-9"	5.4	0.08

INDIANA DEPARTMENT OF TRANSPORTATION

REINFORCED-CONCRETE ENCASEMENT FOR PILES

SEPTEMBER 2012

STANDARD DRAWING NO. E 701-BPIL-01

RICHARD L. VanCLEAVE REGISTERED No. 9750 STATE OF INDIANA PROFESSIONAL ENGINEER

/s/ Richard L. VanCleave 09/04/12
SUPERVISOR, ROADWAY STANDARDS DATE

/s/ Mark A. Miller 09/04/12
CHIEF ENGINEER DATE

FOR FLUTED PIPE

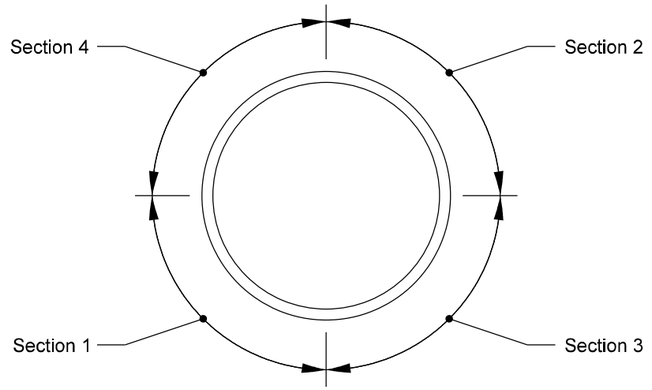

WELDING SEQUENCE

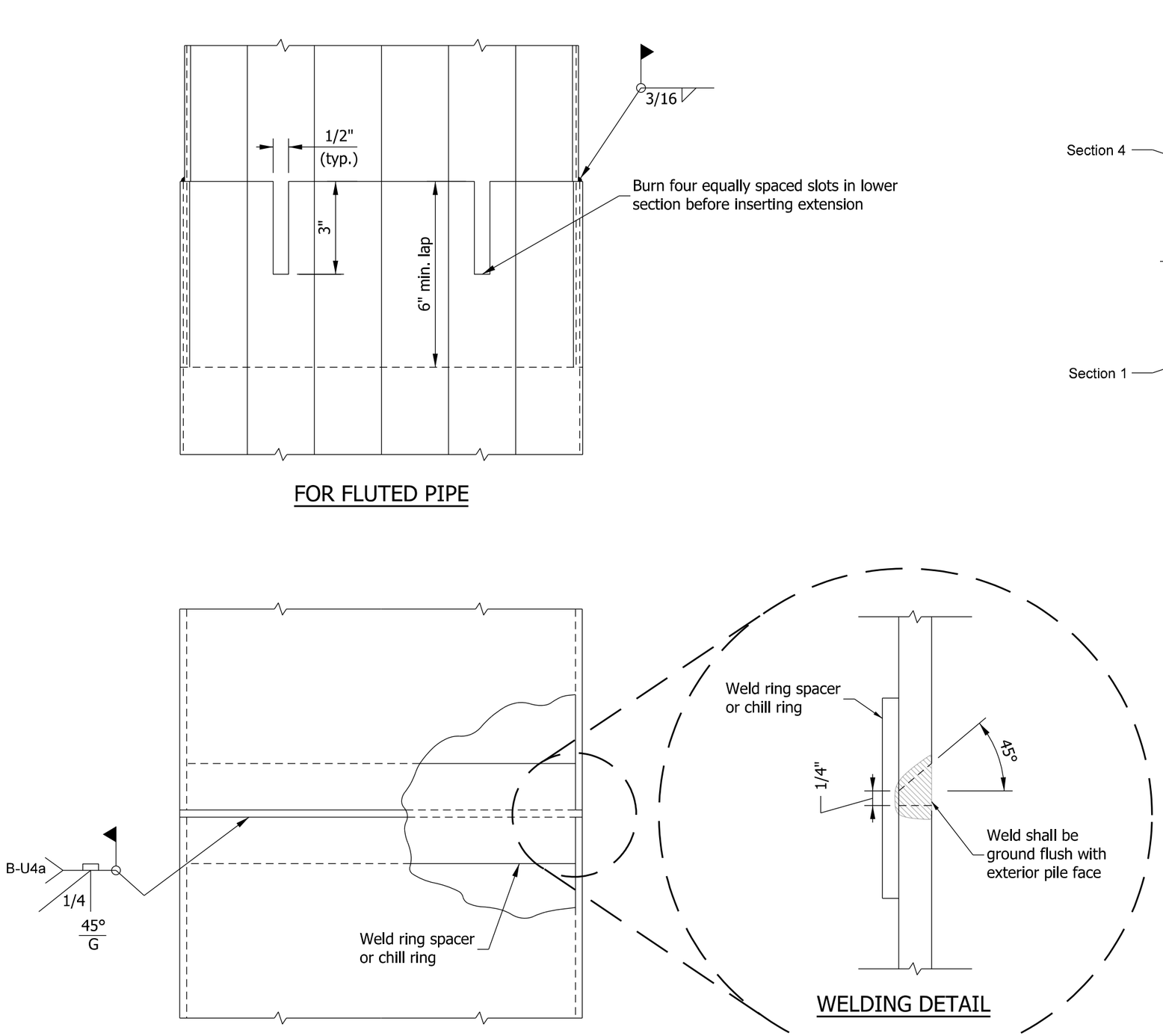

FOR ROUNDED PIPE

WELDING DETAIL

INDIANA DEPARTMENT OF TRANSPORTATION

FIELD SPLICING PIPE PILES

SEPTEMBER 2012

STANDARD DRAWING NO. E 701-BPIL-02

RICHARD L. VanCLEAVE
REGISTERED
No. 9750
STATE OF INDIANA
PROFESSIONAL ENGINEER

/s/ Richard L. VanCleave 09/04/12
SUPERVISOR, ROADWAY STANDARDS DATE

/s/ Mark A. Miller 09/04/12
CHIEF ENGINEER DATE

PROCEDURE FOR SPLICING PARTIALLY DRIVEN PILING

1. Upper Pile Section

Prepare outside of both flanges and one side of web by beveling to a 45° angle. Prepare all surfaces to be welded by grinding.

WEB ELEVATION

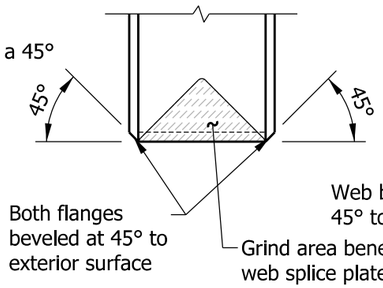

FLANGE ELEVATION

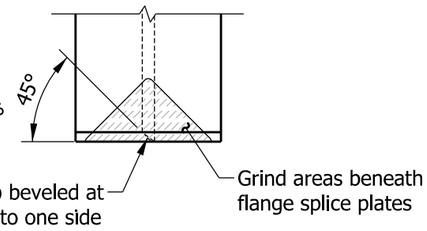

END VIEW

2. Lower Pile Section

Prepare top of pile by restoring it to its original cross section. Grind all surfaces to be welded, extending 1/2" beyond weld area(s).

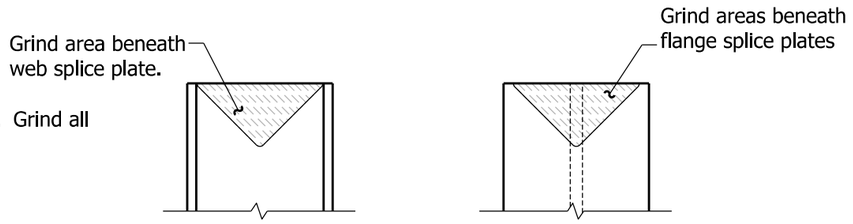

3. Upper Pile Section

Fillet weld web splice plate to upper pile section at two locations.

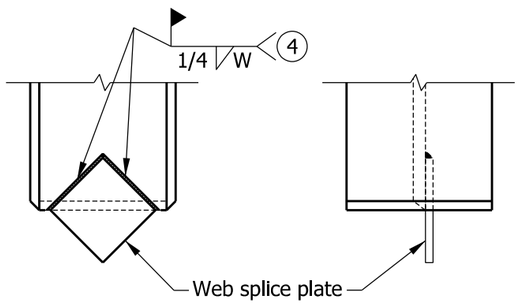

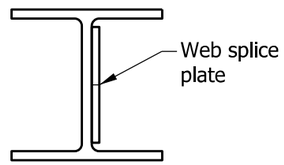

4. Lower Pile Section

Tack weld two backer plates to inside of flange.

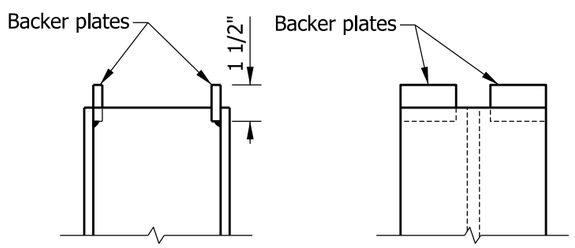

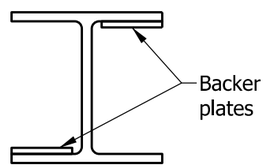

Procedure continued on Standard Drawing E 701-BPIL-04.

NOTES

1. Steel H piling may be spliced in a horizontal position prior to driving, using splice plates and web and flange welds as shown.
2. Two flange splice plates, one web splice plate, and four backer plates will be required per splice.
3. All fillet welds shall be single pass.
4. See table for splice plate dimensions W and F.

SPLICE PLATE AND BACKER PLATE DIMENSIONS

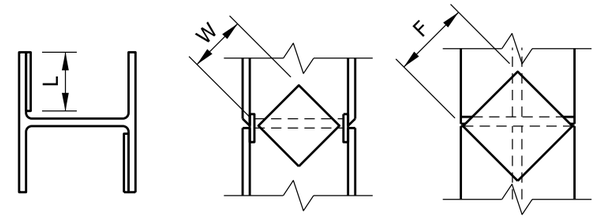

END VIEW | ELEVATION VIEW OF WEB | ELEVATION VIEW OF FLANGE

H-PILE SIZE	HP 10	HP 12	HP 14
Flange Splice Plate, F	7"	8 1/4"	10 1/4"
Web Splice Plate, W	5 3/8"	6 3/4"	8"
Backer Plate Length, L	4 1/8"	5"	6 1/4"

NOTE: Splice plate thickness = 3/8"
Backer plate thickness = 1/4"

INDIANA DEPARTMENT OF TRANSPORTATION

STEEL H-PILE SPLICE

SEPTEMBER 2012

STANDARD DRAWING NO. E 701-BPIL-03

RICHARD L. VanCLEAVE REGISTERED No. 9750 STATE OF INDIANA PROFESSIONAL ENGINEER

/s/ Richard L. VanCleave 09/04/12
SUPERVISOR, ROADWAY STANDARDS DATE

/s/ Mark A. Miller 09/04/12
CHIEF ENGINEER DATE

PROCEDURE FOR SPLICING PARTIALLY DRIVEN PILING (cont.)

5. Combine Pile Sections

Lift and hold upper pile section into place, maintaining 1/4" gap between upper and lower pile sections by using the remaining two backer plates as a spacing guide. Plumb the pile. Tack weld the untacked side of the two backer plates to the inside upper flange. Remove the backer plate spacers and tack weld them to the inside flange portion of the upper and lower sections of the pile. Fillet weld the remaining two sides of the web splice plate to the lower section.

WEB ELEVATION

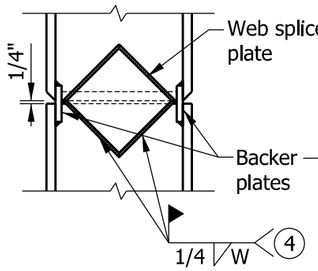

FLANGE ELEVATION

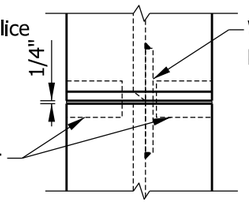

END VIEW

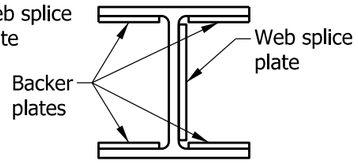

6. Combined Pile Section

Complete Joint Penetration (CJP) weld the web. See Detail A.

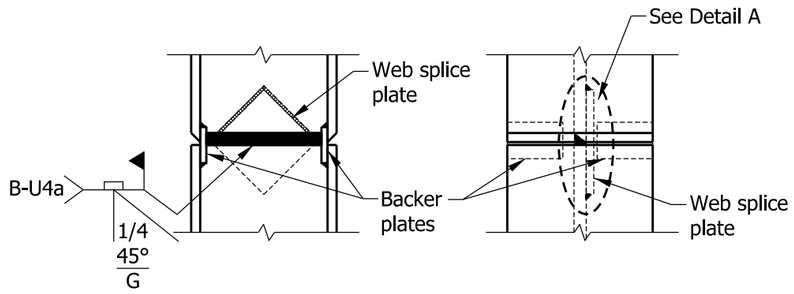

7. Combined Pile Section

Complete Joint Penetration (CJP) weld both flanges. Grind weld smooth with the pile exterior face. See Detail B.

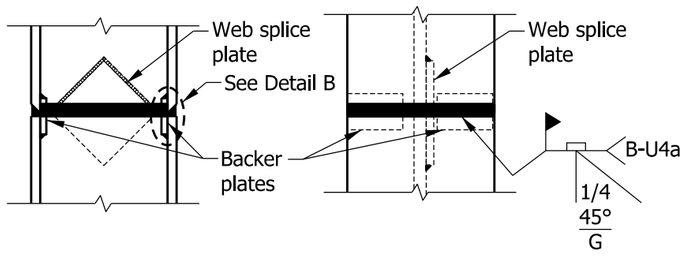

8. Combined Pile Section

Fillet weld the flange splice plates to the flanges.

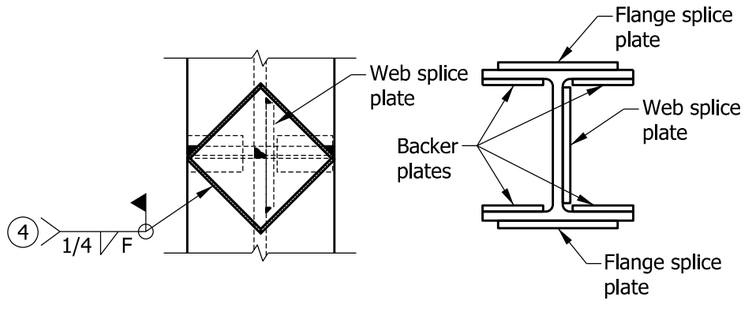

NOTES

1. Steel H piling may be spliced in a horizontal position prior to driving, using splice plates and web and flange welds as shown.
2. Two flange splice plates, one web splice plate, and four backer plates will be required per splice.
3. All fillet welds shall be single pass.

(4) See Standard Drawing E 701-BPIL-03 table for splice plate dimensions W and F.

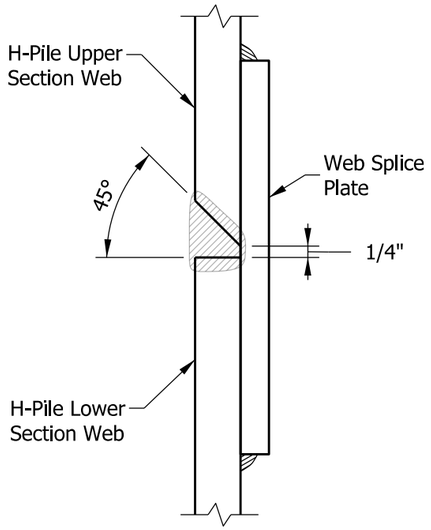

DETAIL A

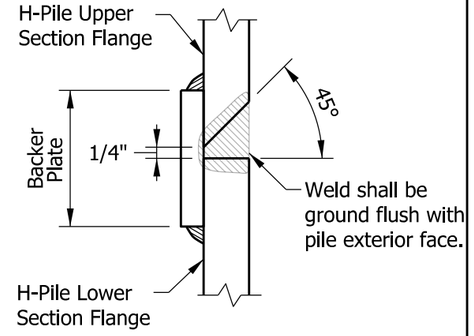

DETAIL B

INDIANA DEPARTMENT OF TRANSPORTATION

STEEL H-PILE SPLICE (CONTINUED)

SEPTEMBER 2012

STANDARD DRAWING NO. E 701-BPIL-04

RICHARD L. VanCLEAVE REGISTERED No. 9750 STATE OF INDIANA PROFESSIONAL ENGINEER

/s/ Richard L. VanCleave 09/04/12
SUPERVISOR, ROADWAY STANDARDS DATE

/s/ Mark A. Miller 09/04/12
CHIEF ENGINEER DATE

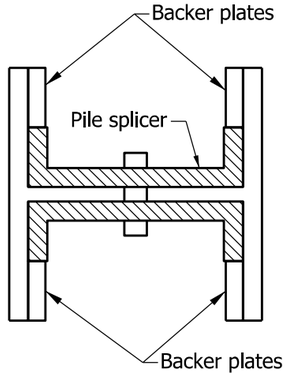

PLAN

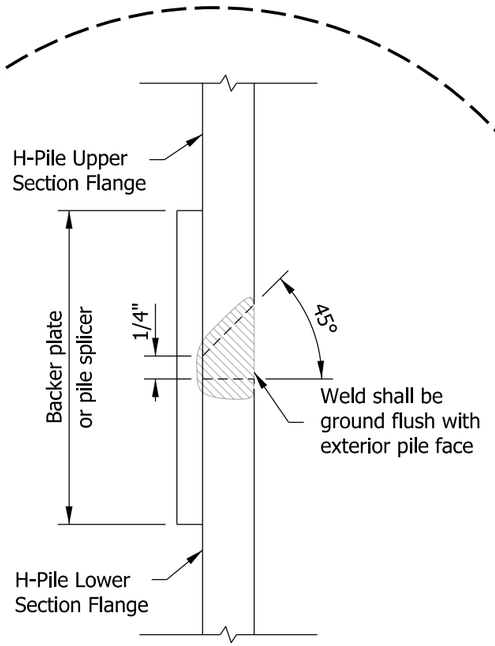

WELDING DETAIL

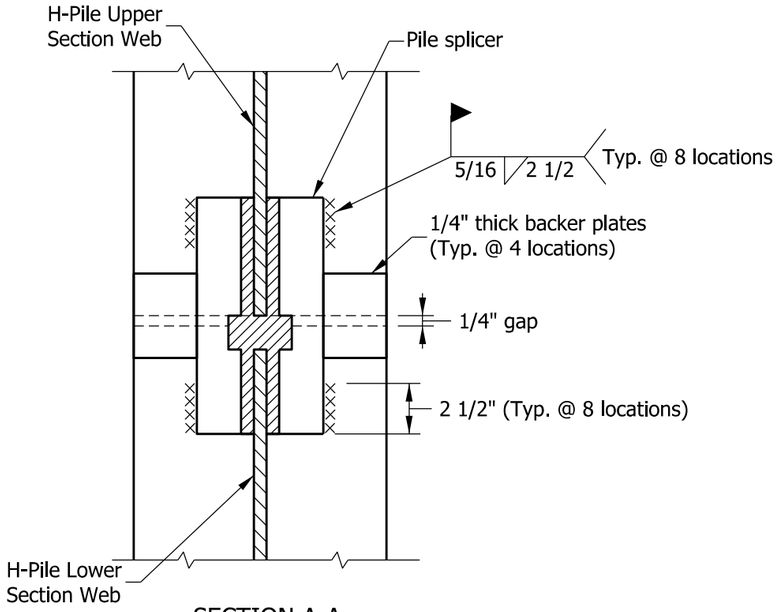

SECTION A-A

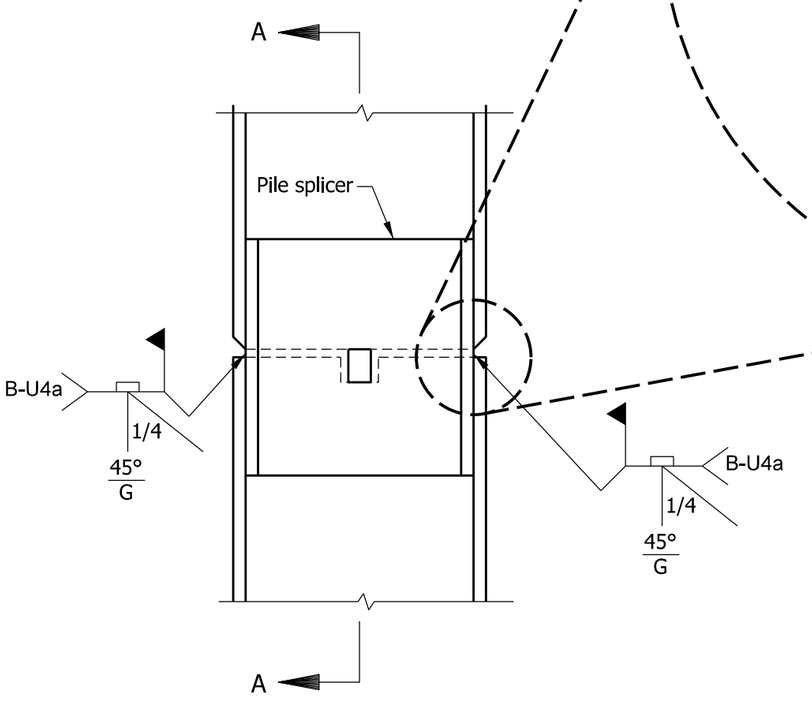

ELEVATION

ALTERNATE STEEL H-PILE SPLICE
USING MECHANICAL PILE SPLICER

INDIANA DEPARTMENT OF TRANSPORTATION

ALTERNATE STEEL
H-PILE MECHANICAL SPLICE

SEPTEMBER 2012

STANDARD DRAWING NO. E 701-BPIL-05

RICHARD L. VanCLEAVE
REGISTERED
No. 9750
STATE OF INDIANA
PROFESSIONAL ENGINEER

/s/ Richard L. VanCleave 09/04/12
SUPERVISOR, ROADWAY STANDARDS DATE

/s/ Mark A. Miller 09/04/12
CHIEF ENGINEER DATE

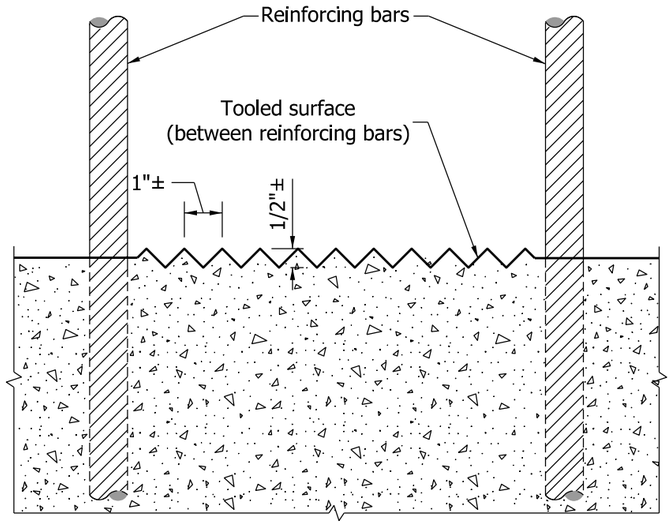

INDIANA DEPARTMENT OF TRANSPORTATION

TYPE A
CONSTRUCTION JOINT

MARCH 2003

STANDARD DRAWING NO. E 702-CJTA-01

RICHARD L. VanCLEAVE
REGISTERED
No. 9750
STATE OF INDIANA
PROFESSIONAL ENGINEER

DETAILS PLACED IN THIS FORMAT 09/04/12

/s/ Richard L. Van Cleave *09/04/12*

SUPERVISOR, ROADWAY STANDARDS DATE

/s/ Mark A. Miller *09/04/12*

CHIEF ENGINEER DATE

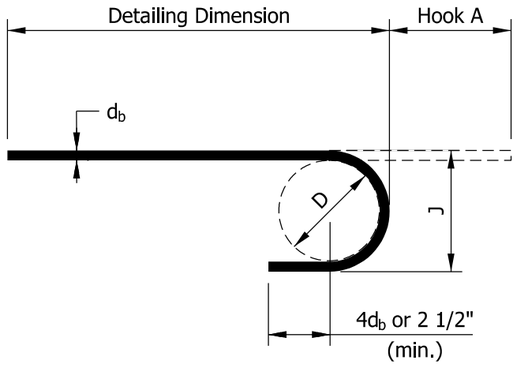

180° HOOK

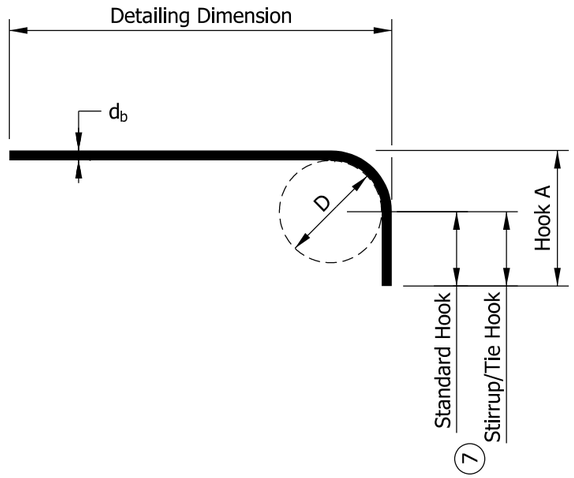

90° HOOK

STANDARD END HOOKS				
BAR SIZE	D	180° HOOK		90° HOOK
		HOOK A	J	HOOK A
#3	2 1/4"	5"	3"	6"
#4	3"	6"	4"	8"
#5	3 3/4"	7"	5"	10"
#6	4 1/2"	8"	6"	1'-0"
#7	5 1/4"	10"	7"	1'-2"
#8	6"	11"	8"	1'-4"
#9	9 1/2"	1'-3"	11 3/4"	1'-7"
#10	10 3/4"	1'-5"	1'-1 1/4"	1'-10"
#11	12"	1'-7"	1'-2 3/4"	2'-0"
#14	18 1/4"	2'-3"	1'-9 3/4"	2'-7"
#18	24"	3'-0"	2'-4 1/2"	3'-5"

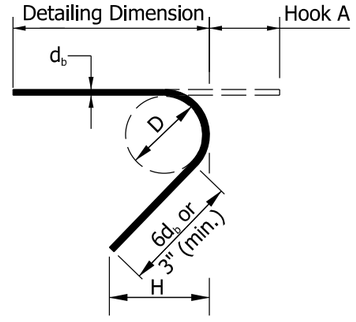

135° SEISMIC HOOK

STIRRUP / SEISMIC HOOKS				
BAR SIZE	D	135° SEISMIC HOOK		90° HOOK
		HOOK A	H*	HOOK A
#3	1 1/2"	4 1/4"	3"	4"
#4	2"	4 1/2"	3"	4 1/2"
#5	2 1/2"	5 1/2"	3 3/4"	6"
#6	4 1/2"	8"	4 1/2"	1'-0"
#7	5 1/4"	9"	5 1/4"	1'-2"
#8	6"	10 1/2"	6"	1'-4"

*H dimension is approximate

NOTES:

1. All dimensions on reinforcing bar bending diagrams shall be measured out-to-out of bars.
2. All dimensions on reinforcing bar details shall be measured on centerlines of bars, except where cover or cl. is indicated.
3. Bent bars will be given a numeric bar mark, e.g., 588. The last two digits, e.g., 88, indicate the mark. The characters preceding the last two digits, e.g., 5, indicate the size of the bar.
4. Straight bars will be designated by size and strength.
5. Standard size hooks shown shall be used on all hooked bars unless noted.
6. See the plans for lap and embedment lengths.

(7) Standard Hook: • $12d_b$

Stirrup/Tie Hook: • $6d_b$ for #3, #4, and #5
• $12d_b$ for #6, #7, and #8

8. This drawings is consistent with the ACI 318-14 and CRSI *Manual of Standard Practice*.

ACI = American Concrete Institute
CRSI = Concrete Reinforcing Steel Institute

INDIANA DEPARTMENT OF TRANSPORTATION

BAR BENDING DETAILS

SEPTEMBER 2022

STANDARD DRAWING NO. E 703-BRST-01

SUBHI BAZLAMIT
REGISTERED
No. 12000143
STATE OF INDIANA
PROFESSIONAL ENGINEER

Subhi Bazlamit 6/15/2022
DESIGN STANDARDS ENGINEER DATE

06/27/2022
CHIEF ENGINEER DATE

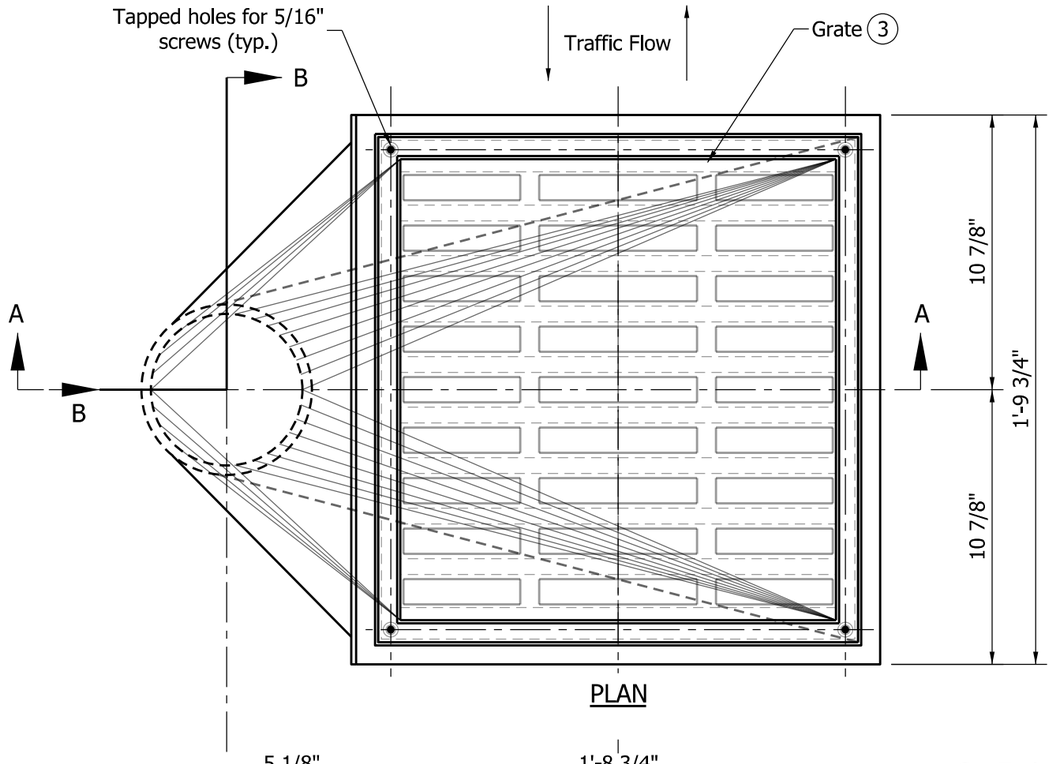

PLAN

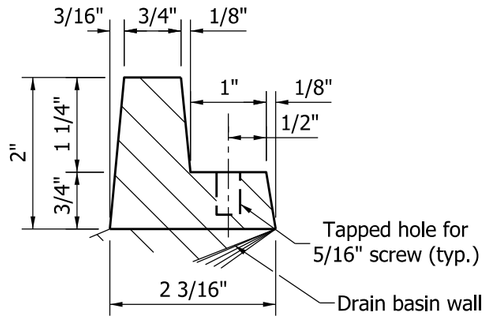

TYPICAL GRATE SHELF PROFILE A
(OUTLET SIDE OF BASIN)

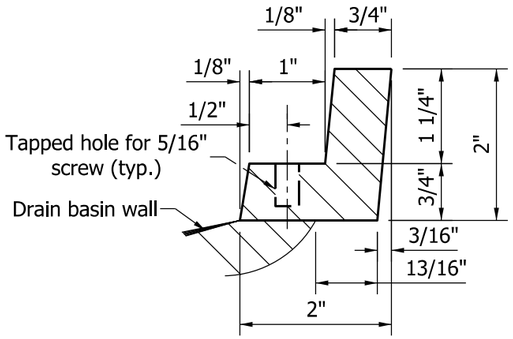

TYPICAL GRATE SHELF PROFILE B
(NON-OUTLET SIDE OF BASIN)

NOTES

1. See Standard Drawing E 715-BDCG-01 for deck drain casting extension pipe details.
2. See Standard Drawing E 704-BDCG-05 for adjusting frame details.
3. See Standard Drawing E 704-BDCG-02 for grate details.

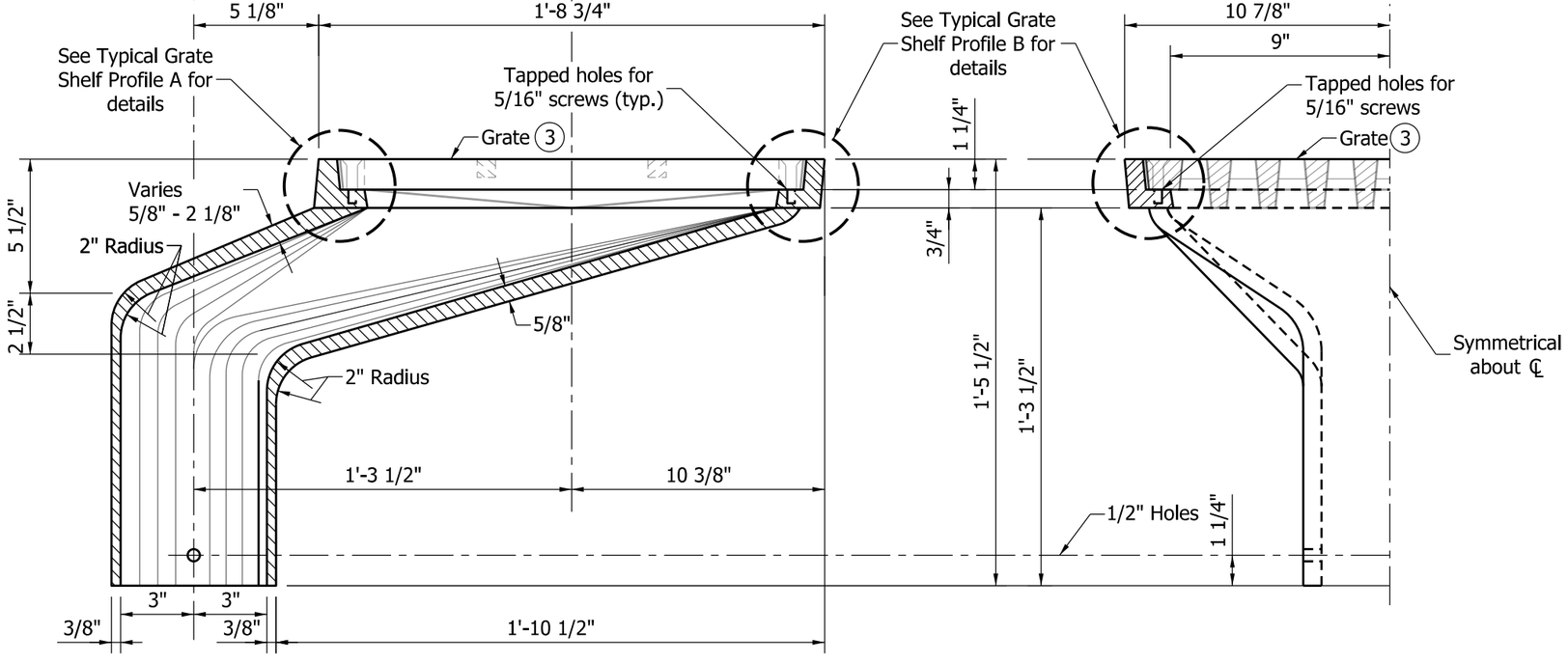

SECTION A-A

HALF SECTION B-B

INDIANA DEPARTMENT OF TRANSPORTATION

DECK DRAIN
TYPE OS

SEPTEMBER 2012

STANDARD DRAWING NO. E 704-BDCG-01

RICHARD L. VanCLEAVE REGISTERED No. 9750 STATE OF INDIANA PROFESSIONAL ENGINEER

/s/ Richard L. VanCleave 09/04/12
SUPERVISOR, ROADWAY STANDARDS DATE

/s/ Mark A. Miller 09/04/12
CHIEF ENGINEER DATE

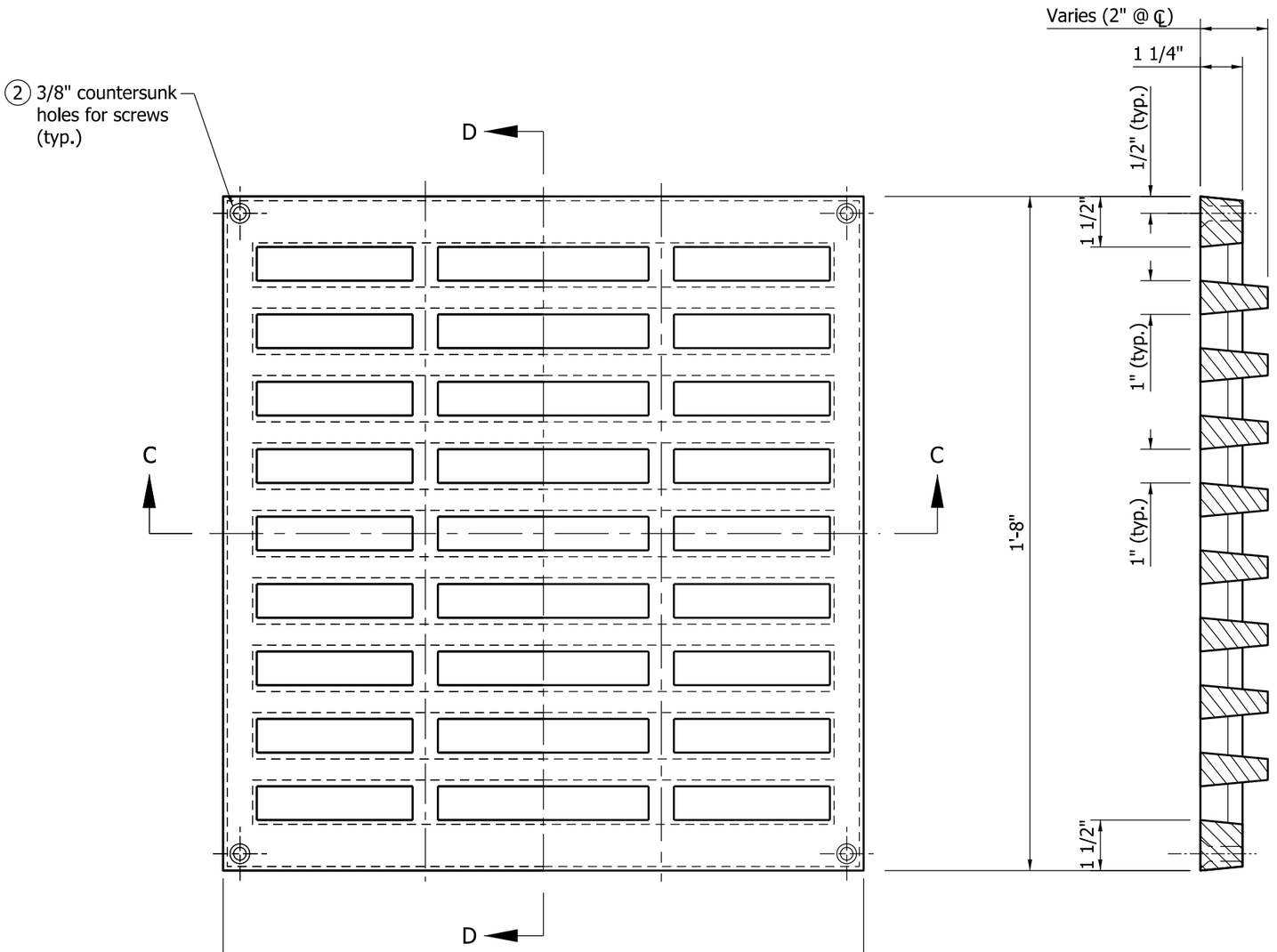

PLAN

SECTION D-D

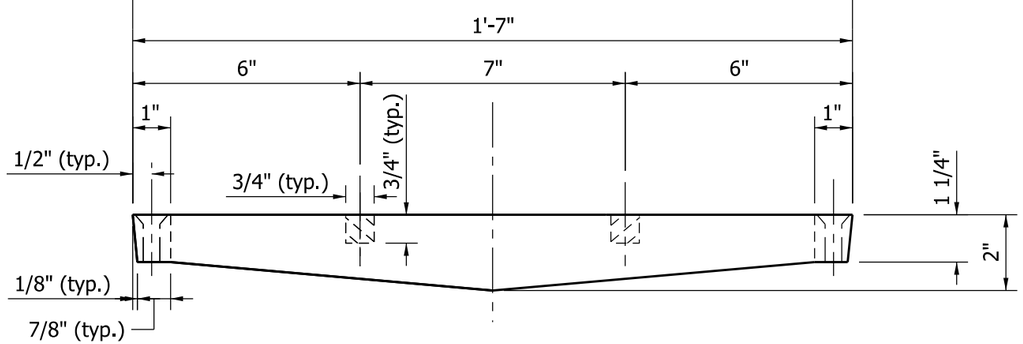

SECTION C-C

NOTES

1. This grate used with Type OS deck drain. See Standard Drawing E 704-BDCG-01 for deck drain details.

(2) 4 - 5/16" x 1 3/4" flat-head stainless steel screws required for each grate.

INDIANA DEPARTMENT OF TRANSPORTATION

DECK DRAIN TYPE OS
GRATE

SEPTEMBER 2012

STANDARD DRAWING NO. E 704-BDCG-02

RICHARD L. VanCLEAVE REGISTERED No. 9750 STATE OF INDIANA PROFESSIONAL ENGINEER

/s/ Richard L. VanCleave 09/04/12
SUPERVISOR, ROADWAY STANDARDS DATE

/s/ Mark A. Miller 09/04/12
CHIEF ENGINEER DATE

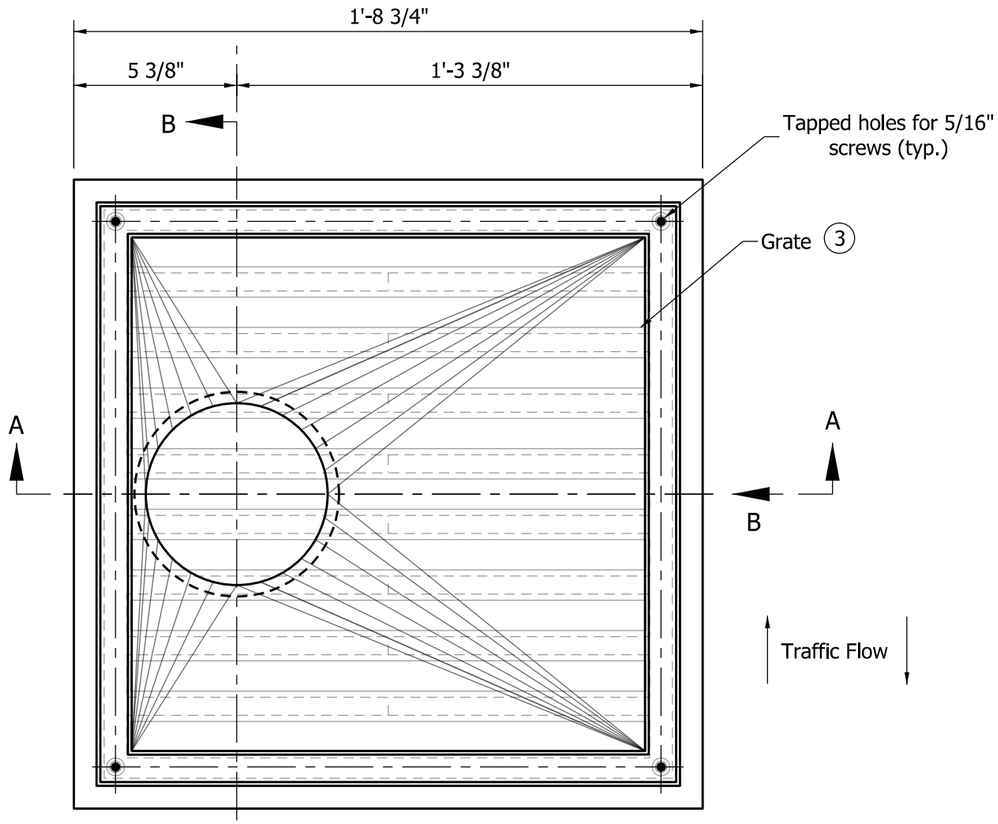

PLAN

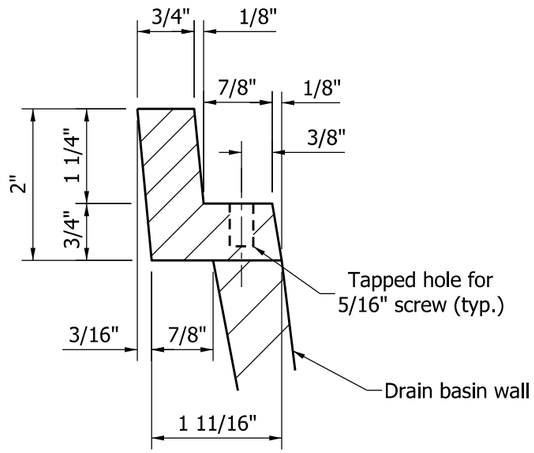

TYPICAL GRATE SHELF PROFILE

NOTES

1. See Standard Drawing E 715-BDCG-01 for deck drain casting extension pipe details.
2. See Standard Drawing E 704-BDCG-05 for adjusting frame details.

(3) See Standard Drawing E 704-BDCG-04 for grate details.

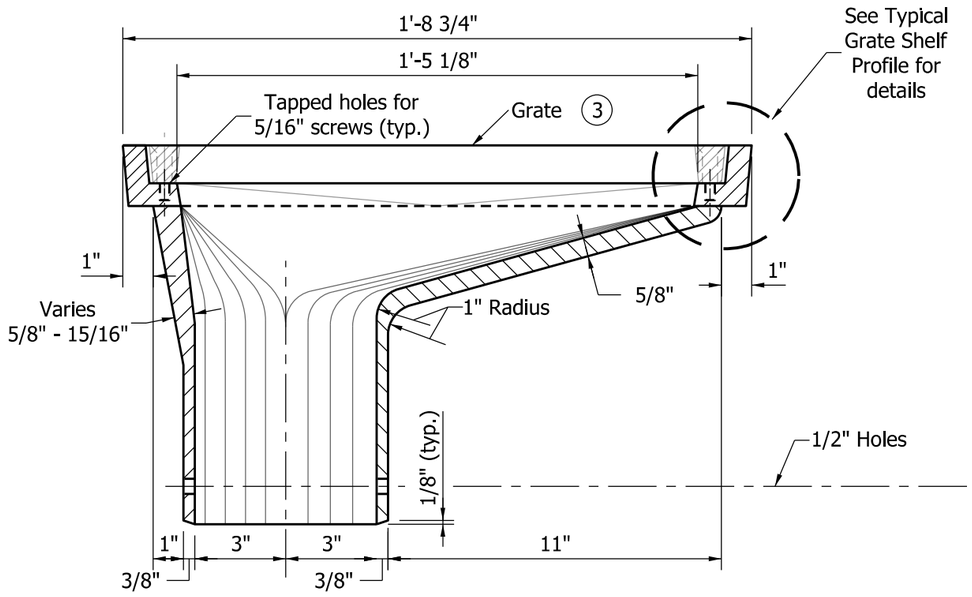

SECTION A-A

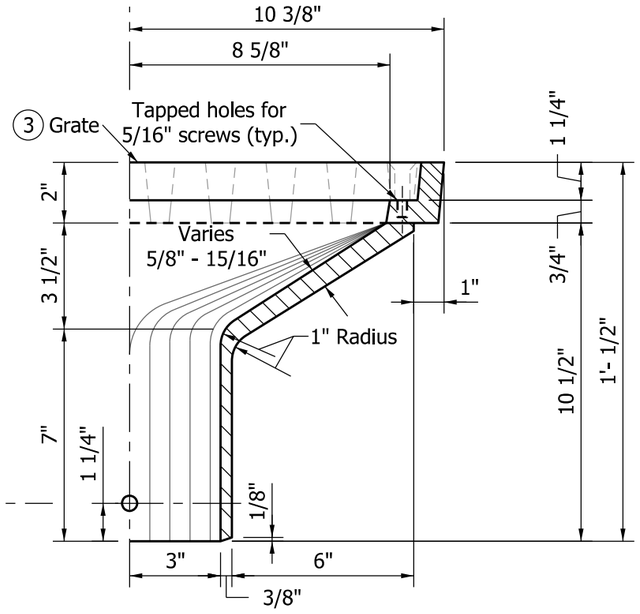

HALF SECTION B-B

INDIANA DEPARTMENT OF TRANSPORTATION

DECK DRAIN
TYPE SQ

SEPTEMBER 2012

STANDARD DRAWING NO. E 704-BDCG-03

RICHARD L. VanCLEAVE REGISTERED No. 9750 STATE OF INDIANA PROFESSIONAL ENGINEER

/s/ Richard L. VanCleave 09/04/12
SUPERVISOR, ROADWAY STANDARDS DATE

/s/ Mark A. Miller 09/04/12
CHIEF ENGINEER DATE

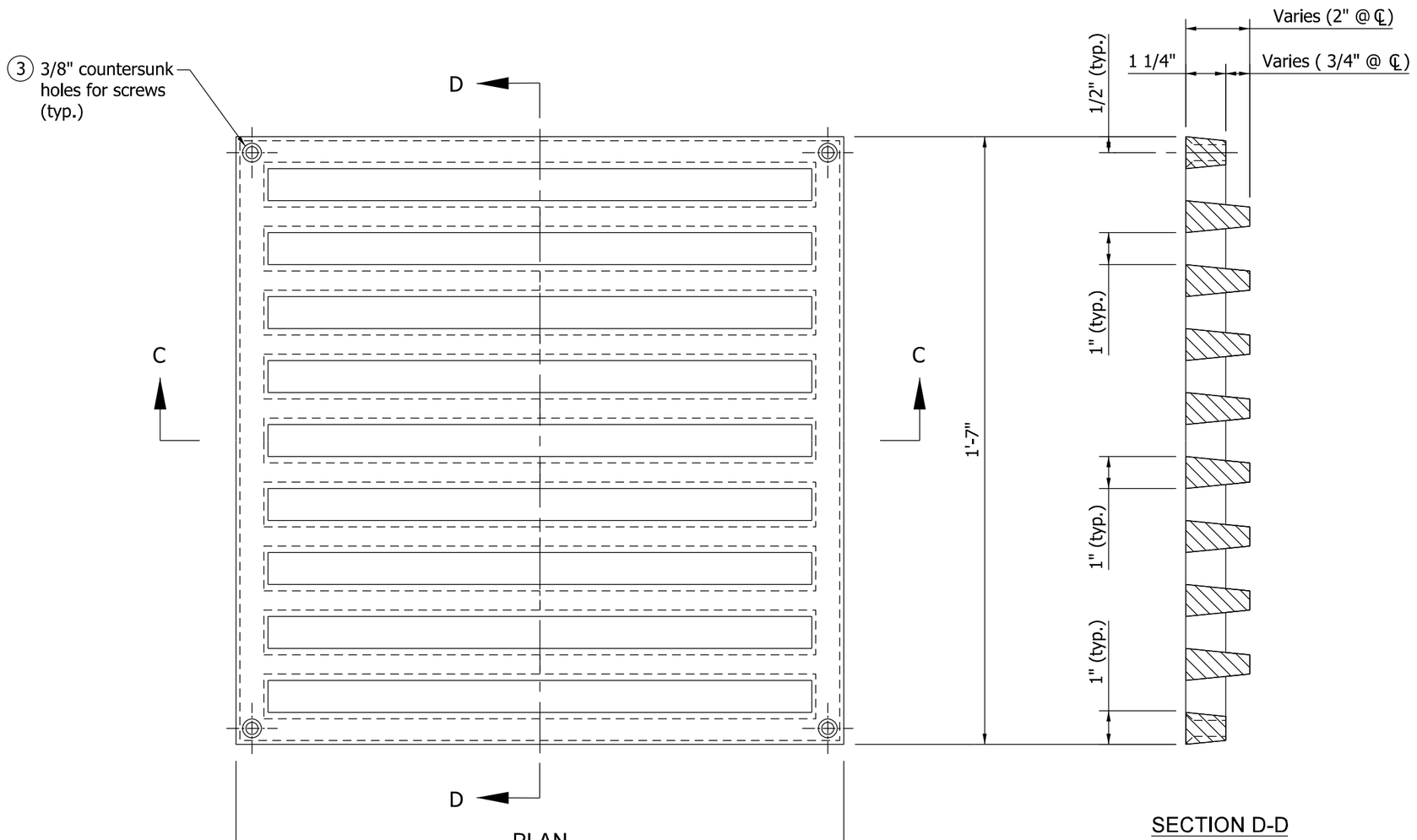

PLAN

SECTION D-D

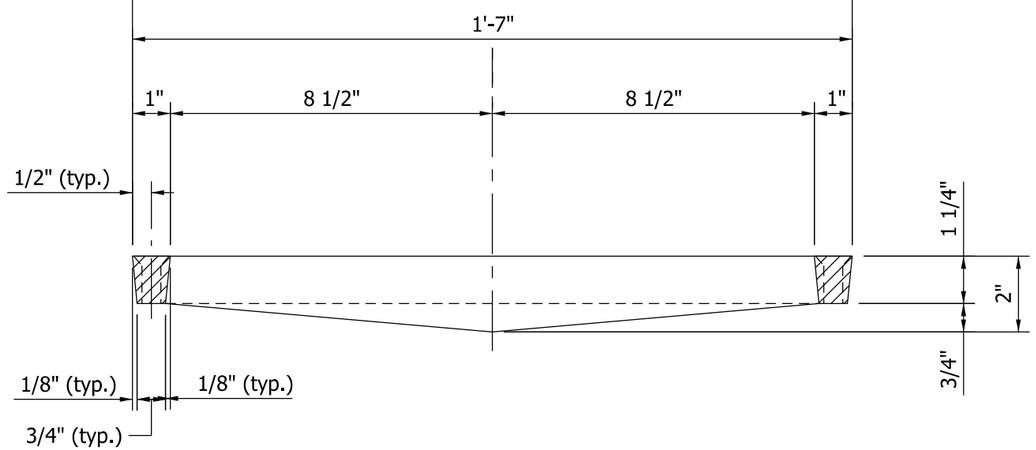

SECTION C-C

NOTES

1. See the floor details on the plans for orientation of the grate.
2. This grate used with Type SQ deck drain. See Standard Drawing E 704-BDCG-03 for deck drain details.

(3) 4 - 5/16" x 1 3/4" flat-head stainless steel screws required for each grate.

INDIANA DEPARTMENT OF TRANSPORTATION

DECK DRAIN TYPE SQ
GRATE

SEPTEMBER 2012

STANDARD DRAWING NO. E 704-BDCG-04

RICHARD L. VanCLEAVE REGISTERED No. 9750 STATE OF INDIANA PROFESSIONAL ENGINEER

/s/ Richard L. VanCleave 09/04/12
SUPERVISOR, ROADWAY STANDARDS DATE

/s/ Mark A. Miller 09/04/12
CHIEF ENGINEER DATE

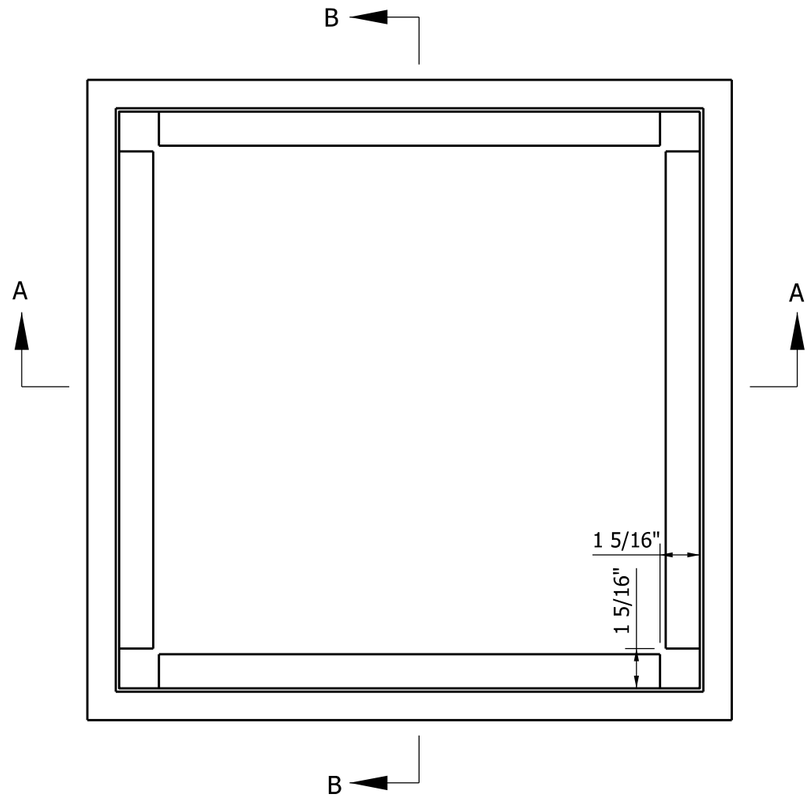

PLAN VIEW

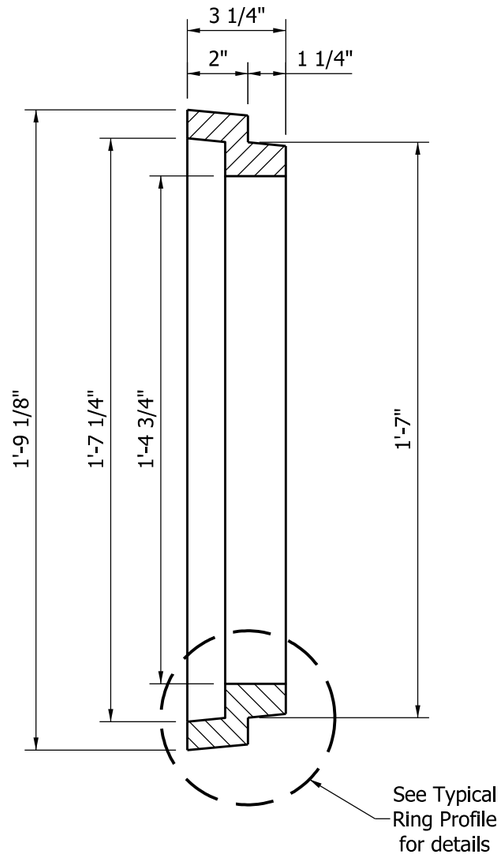

SECTION B-B

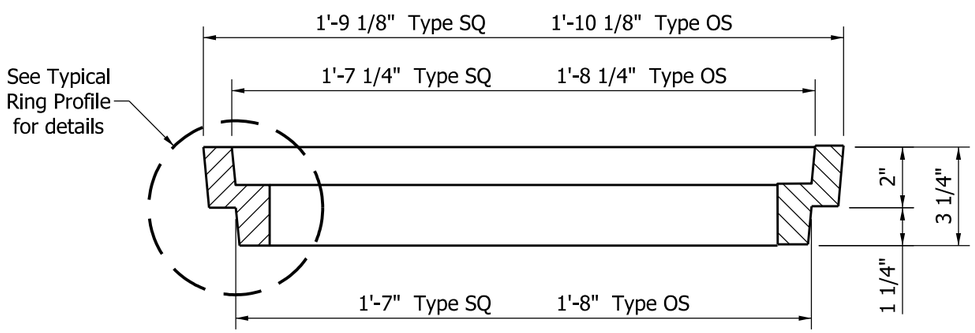

SECTION A-A

NOTES

1. 4 - 5/16" x 3 3/4" flat-head stainless steel screws required when frame is used.

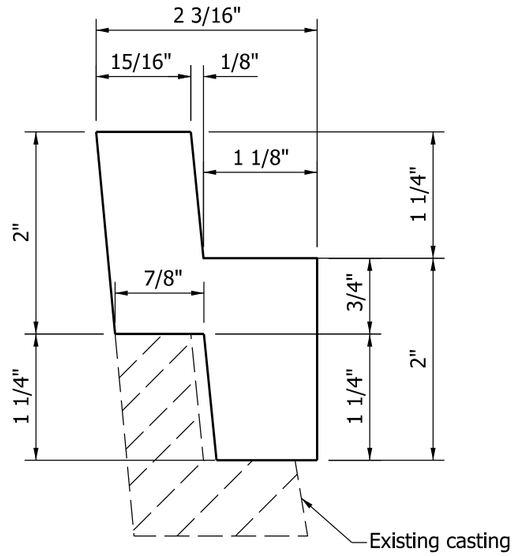

TYPICAL RING PROFILE

INDIANA DEPARTMENT OF TRANSPORTATION

DECK DRAIN TYPE OS OR SQ
ADJUSTING FRAME

SEPTEMBER 2012

STANDARD DRAWING NO. E 704-BDCG-05

RICHARD L. VanCLEAVE
REGISTERED
No. 9750
STATE OF INDIANA
PROFESSIONAL ENGINEER

/s/ Richard L. VanCleave 09/04/12
SUPERVISOR, ROADWAY STANDARDS DATE

/s/ Mark A. Miller 09/04/12
CHIEF ENGINEER DATE

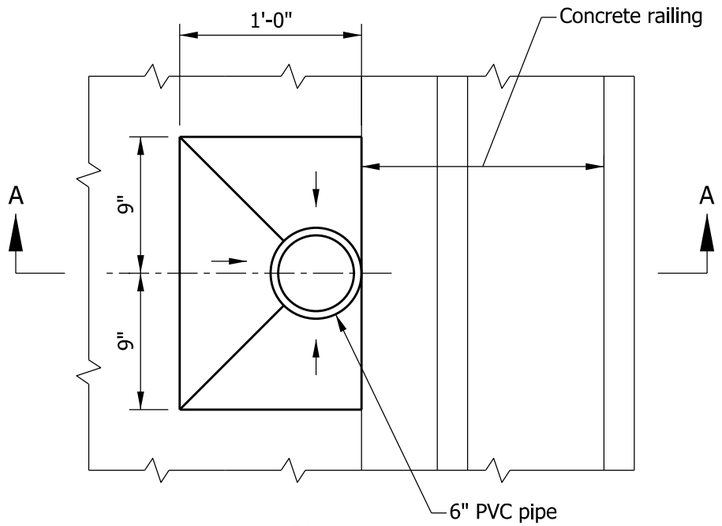

PLAN

NOTE

1. See plans for drain spacing.

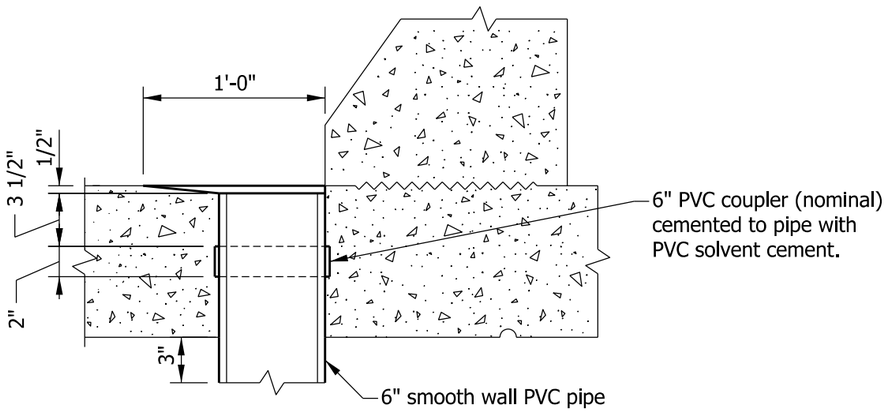

6" SMOOTH WALL PVC PIPE

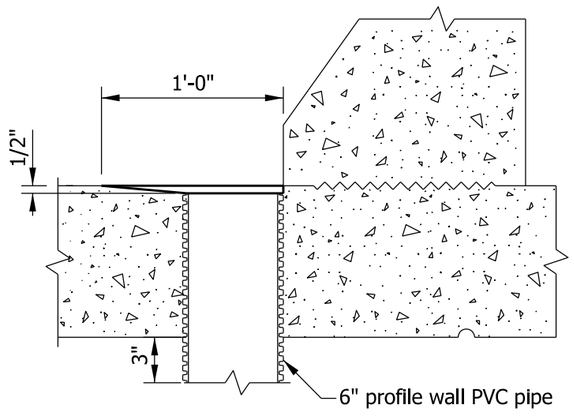

6" PROFILE WALL PVC PIPE

SECTION A-A

INDIANA DEPARTMENT OF TRANSPORTATION

SLAB BRIDGE FLOOR DRAIN
DETAIL

SEPTEMBER 2012

STANDARD DRAWING NO. E 704-SBFD-01

RICHARD L. VanCLEAVE
REGISTERED
No. 9750
STATE OF INDIANA
PROFESSIONAL ENGINEER

/s/ Richard L. Van Cleave 09/04/12
SUPERVISOR, ROADWAY STANDARDS DATE

/s/ Mark A. Miller 09/04/12
CHIEF ENGINEER DATE

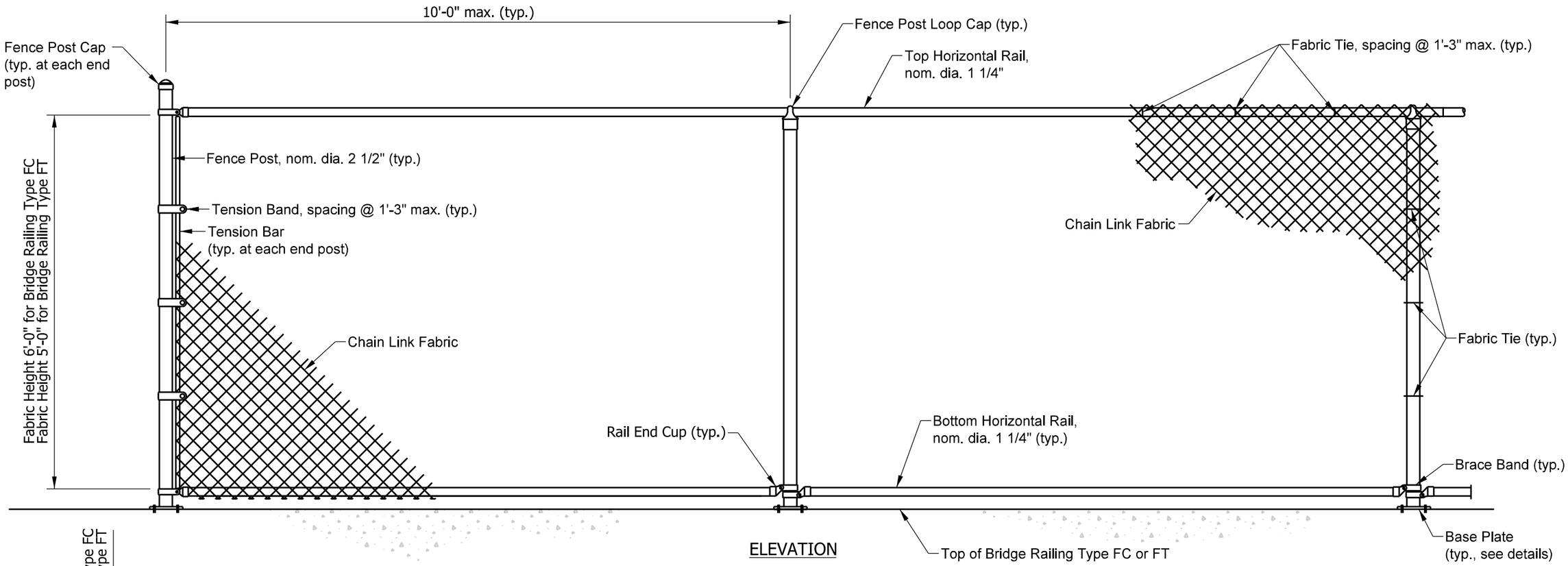

ELEVATION

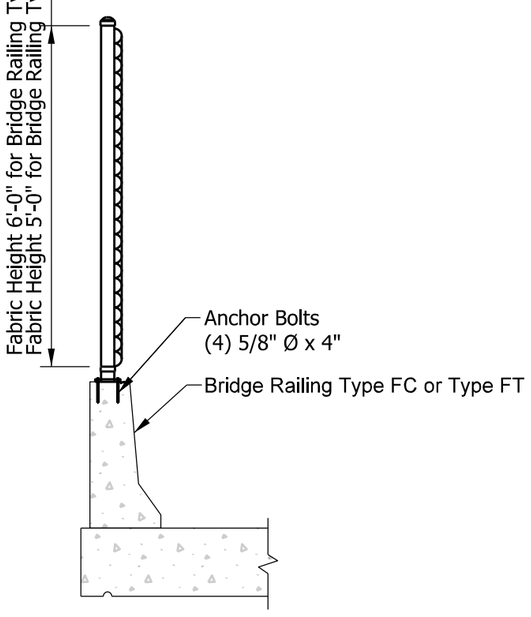

TYPICAL SECTION

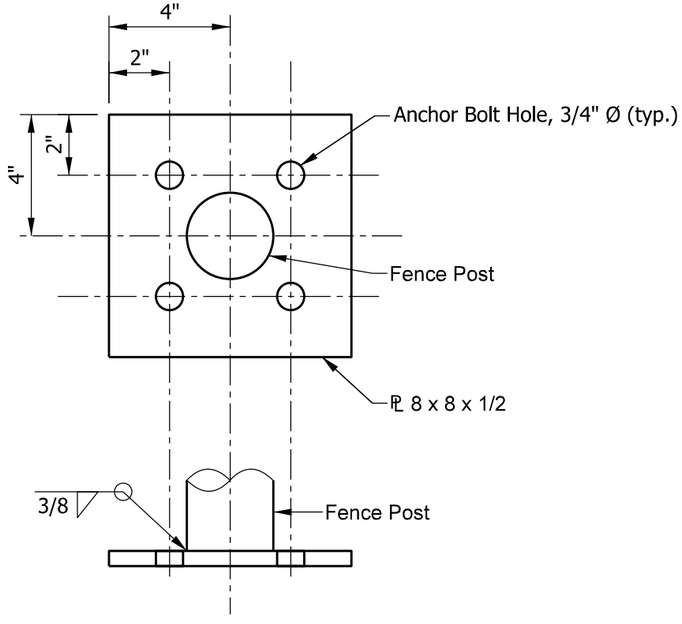

BASE PLATE DETAILS

INDIANA DEPARTMENT OF TRANSPORTATION	
BRIDGE RAILING PEDESTRIAN FENCE SEPTEMBER 2012	
STANDARD DRAWING NO. E 706-BRPF-01	
RICHARD L. VanCLEAVE REGISTERED No. 9750 STATE OF INDIANA PROFESSIONAL ENGINEER	/s/ Richard L. Van Cleave 09/04/12 SUPERVISOR, ROADWAY STANDARDS DATE /s/ Mark A. Miller 09/04/12 CHIEF ENGINEER DATE

INDEX

SHEET NO.	SUBJECT
1	Railing, PF-1 and PS-1 Index and General Notes
2	Railing, PF-1 Elevation, Section, and Rail End Detail
3	Railing, PS-1 Elevation, Section, and Rail End Detail
4	Railing, PF-1 and PS-1, Steel Tube and Rail Splice Details
5	Railing, PF-1 and PS-1 Base Plate and Reinforcing Bar Bending Details

GENERAL NOTES:

1. Intermediate railing splices shall be placed every 20 ft.
2. All chamfered edges shall be 3/4 in.
3. All reinforcing bars designated E shall be epoxy coated.

INDIANA DEPARTMENT OF TRANSPORTATION

RAILING, PF-1 AND PS-1
INDEX AND GENERAL NOTES

SEPTEMBER 2019

STANDARD DRAWING NO. E 706-BRPP-01

5/2/2019
DESIGN STANDARDS ENGINEER DATE

6/5/2019
CHIEF ENGINEER DATE

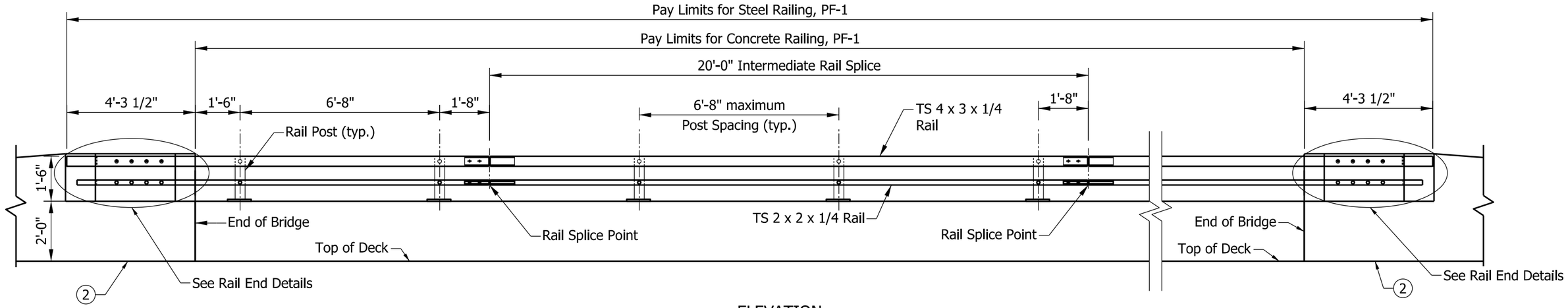

ELEVATION

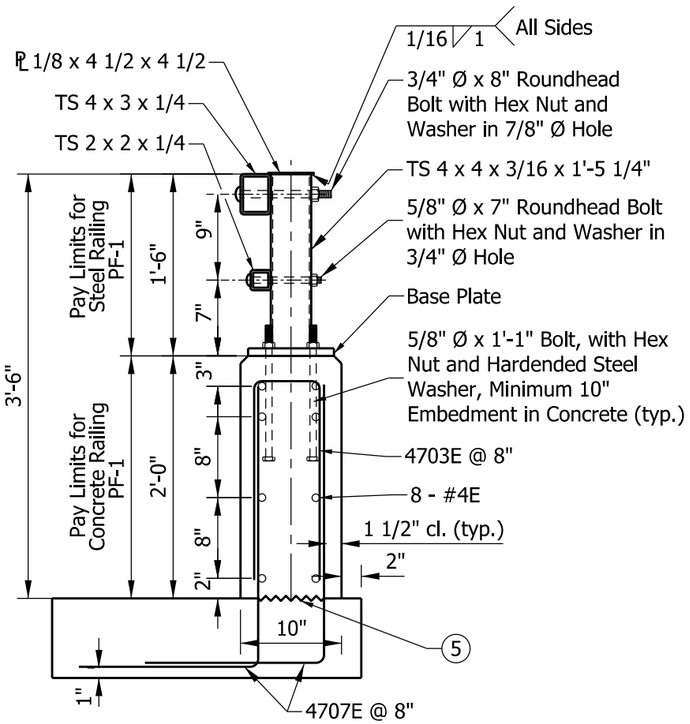

TYPICAL SECTION

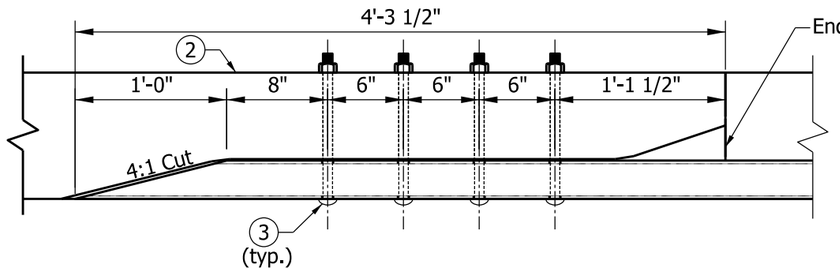

PLAN VIEW OF TS 4 X 3 X 1/4

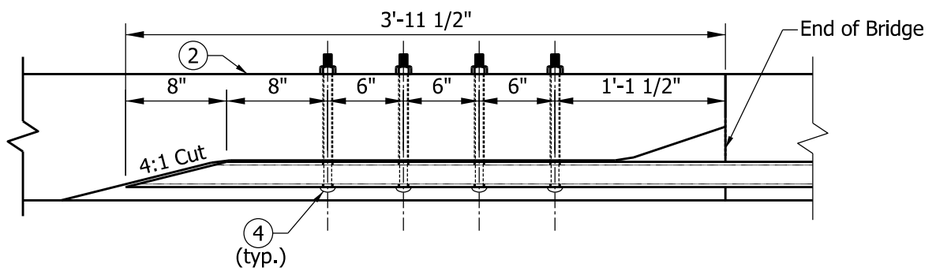

PLAN VIEW OF TS 2 X 2 X 1/4

RAIL END DETAILS

QUANTITIES FOR ONE RUNNING FOOT OF RAILING	
Concrete, class C	1.66 CFT
Reinforcing bars*	17.0 LBS

* Wt. of reinforcing bars doesn't include allowance for splices in longitudinal bars

NOTES:

1. PF-1 railing is acceptable as MASH Test Level 3.
2. Concrete Bridge Railing Transition, TPF-1. See Standard Drawing series E 706-TTPP for details.
3. 3/4 in. diameter x 11 1/2 in. round-head bolt in 7/8 in. diameter hole. Hole shall be slotted as required for expansion.
4. 5/8 in. diameter x 10 1/2 in. round-head bolt in 3/4 in. hole. Hole shall be slotted as required for expansion.
5. Construction Joint Type A. See Standard Drawing E 702-CJTA-01 for details.

INDIANA DEPARTMENT OF TRANSPORTATION

RAILING, PF-1
ELEVATION, SECTION, AND RAIL END DETAIL

SEPTEMBER 2019

STANDARD DRAWING NO. E 706-BRPP-02

ELIZABETH W. PHILLIPS REGISTERED No. 10200124 STATE OF INDIANA PROFESSIONAL ENGINEER

5/2/2019
DESIGN STANDARDS ENGINEER DATE

6/5/2019
CHIEF ENGINEER DATE

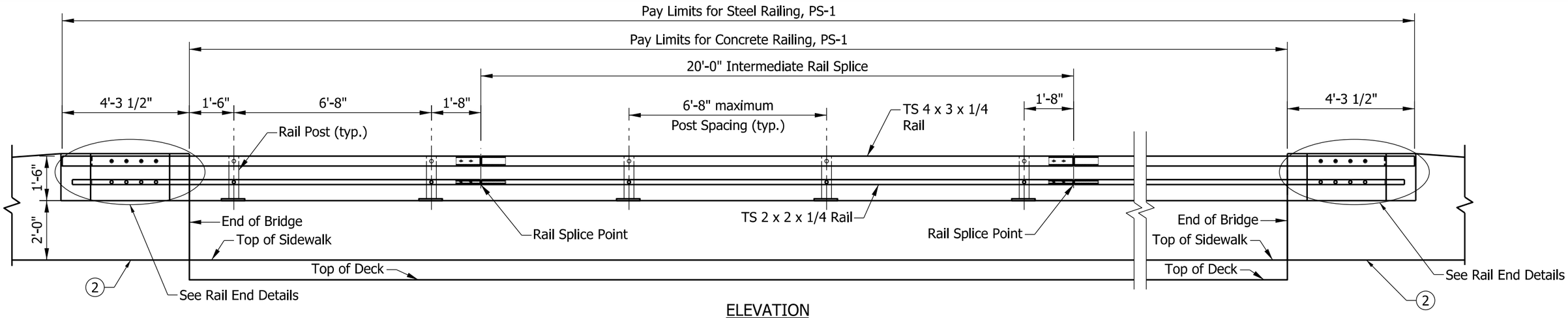

ELEVATION

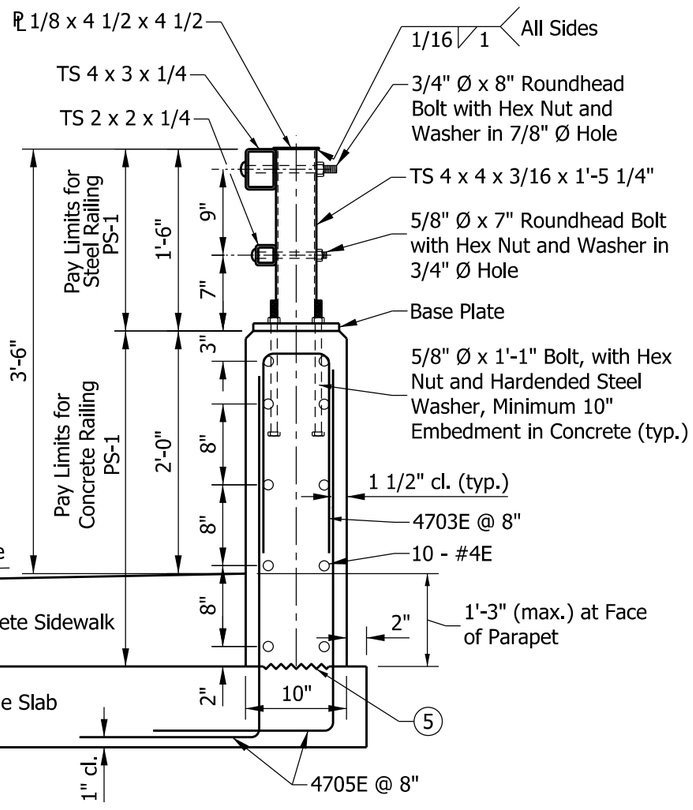

TYPICAL SECTION

QUANTITIES FOR ONE RUNNING FOOT OF RAILING	
Concrete, class C*	2.30 CFT
Reinforcing bars**	19.6 LBS

* Concrete colume based on an assumed 3'-3" total parapet height. Actual quantity will vary based on plan parapet height.
** Wt. of reinforcing bars doesn't include allowance for splices in longitudinal bars

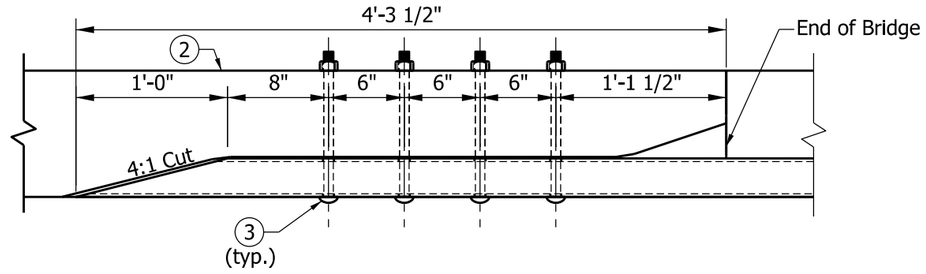

PLAN VIEW OF TS 4 X 3 X 1/4

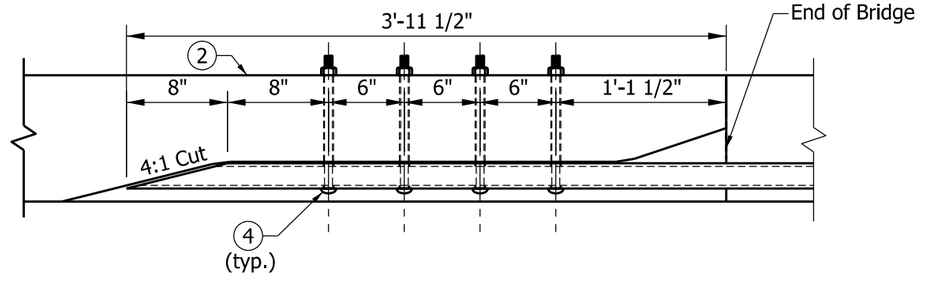

PLAN VIEW OF TS 2 X 2 X 1/4

RAIL END DETAILS

NOTES:

1. PS-1 railing is acceptable as MASH Test Level 3.

(2) Concrete Bridge Railing Transition, TPS-1. See Standard Drawing series E 706-TTPP for details.

(3) 3/4 in. diameter x 11 1/2 in. round-head bolt in 7/8 in. diameter hole. Hole shall be slotted as required for expansion.

(4) 5/8 in. diameter x 10 1/2 in. round-head bolt in 3/4 in. diameter hole. Hole shall be slotted as required for expansion.

(5) Construction Joint Type A. See Standard Drawing E 702-CJTA-01 for details.

INDIANA DEPARTMENT OF TRANSPORTATION

RAILING, PS-1
ELEVATION, SECTION, AND RAIL END DETAIL

SEPTEMBER 2019

STANDARD DRAWING NO. E 706-BRPP-03

ELIZABETH W. PHILLIPS REGISTERED No. 10200124 STATE OF INDIANA PROFESSIONAL ENGINEER

5/29/2019
DESIGN STANDARDS ENGINEER DATE

6/5/2019
CHIEF ENGINEER DATE

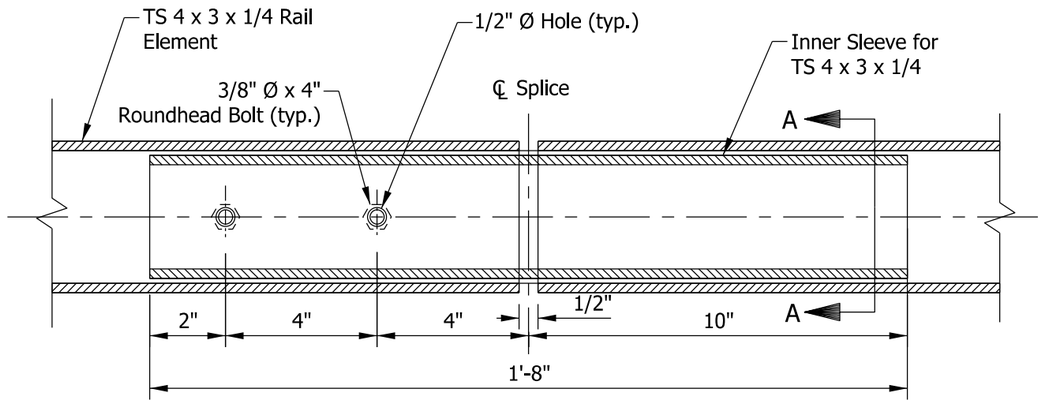

SPLICE ASSEMBLY
FOR TS 4 X 3 X 1/4 RAIL

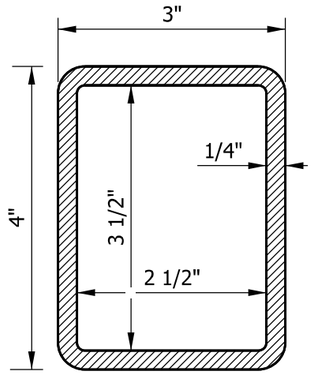

TS 4 x 3 x 1/4

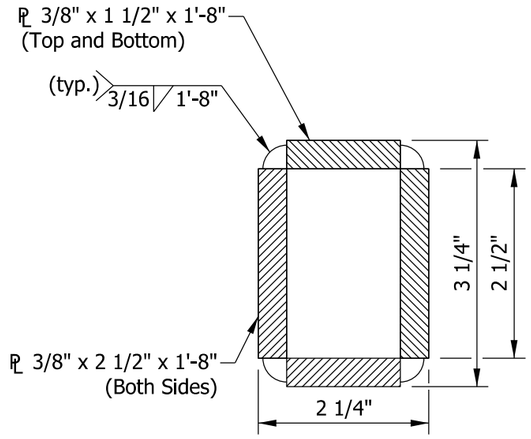

INNER SLEEVE FOR
TS 4 x 3 x 1/4

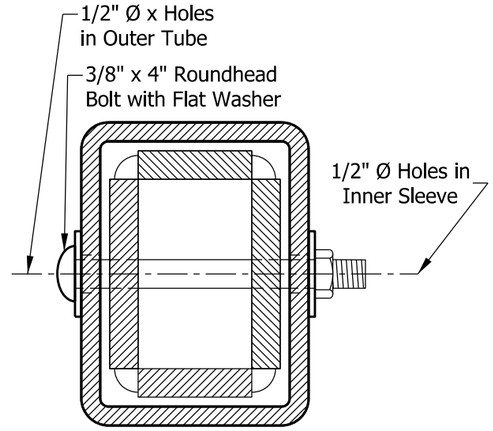

SECTION A-A

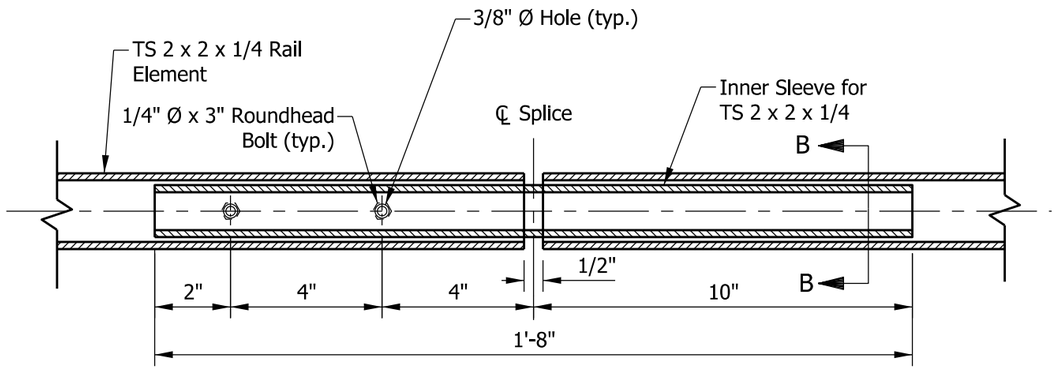

SPLICE ASSEMBLY
FOR TS 2 X 2 X 1/4 RAIL

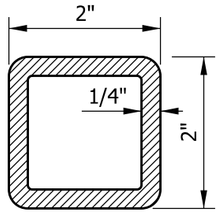

TS 2 x 2 x 1/4

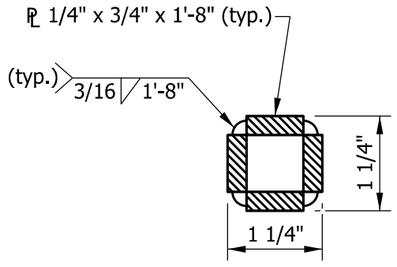

INNER SLEEVE FOR
TS 2 x 2 x 1/4

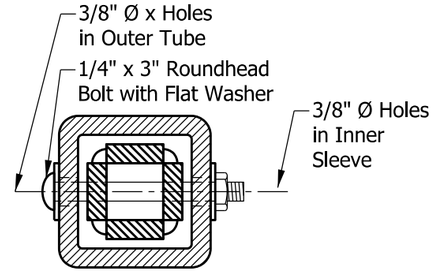

SECTION B-B

INDIANA DEPARTMENT OF TRANSPORTATION

RAILING, PF-1 AND PS-1
STEEL TUBE AND RAIL SPLICE DETAILS

SEPTEMBER 2019

STANDARD DRAWING NO. E 706-BRPP-04

5/2/2019
DESIGN STANDARDS ENGINEER DATE

6/5/2019
CHIEF ENGINEER DATE

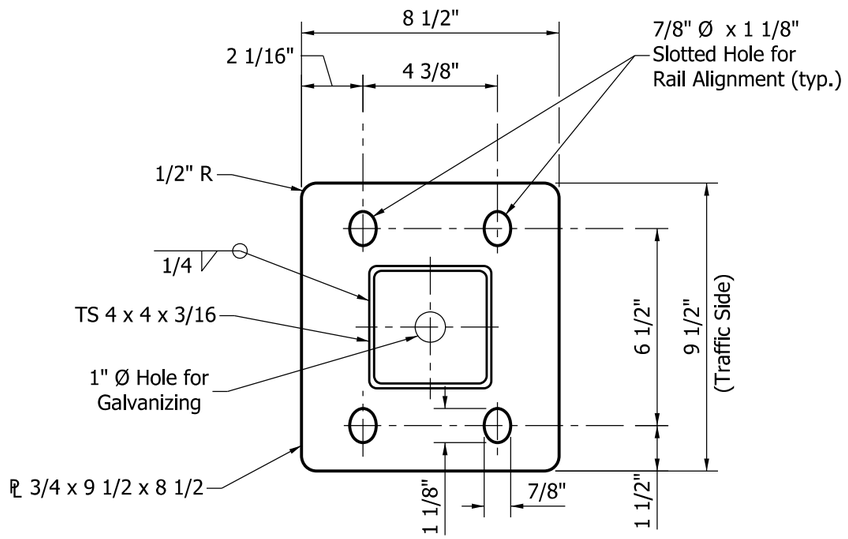

BASE PLATE DETAIL

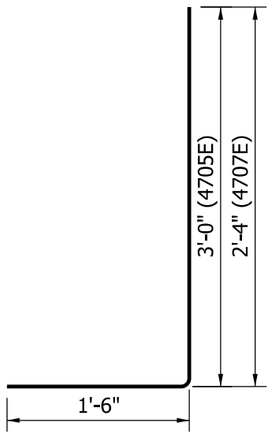

4705E x 4'-6"
4707E x 3'-10"

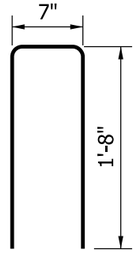

4703E x 3'-11"

NOTES:

1. See Standard Drawing E 703-BRST-01 for reinforcing-bar bending details and notes.

INDIANA DEPARTMENT OF TRANSPORTATION

RAILING, PF-1 and PS-1
BASE PLATE AND REINFORCING BAR
BENDING DETAILS
SEPTEMBER 2019

STANDARD DRAWING NO. E 706-BRPP-05

ELIZABETH W. PHILLIPS
REGISTERED
No. 10200124
STATE OF INDIANA
PROFESSIONAL ENGINEER

5/2/2019
DESIGN STANDARDS ENGINEER DATE

6/5/2019
CHIEF ENGINEER DATE

INDEX	
SHEET NO.	SUBJECT
1	Concrete Railing, FC and FT Index and General Notes
2	Concrete Railing, FC
3	Concrete Railing, FT
4	Concrete Railing Placement

GENERAL NOTES:

1. A joint shall be provided between the bridge railing and railing transition at the end of the bridge slab as shown on Standard Drawing E 706-CBRT-01.

2. For twin structures and other structures which are placed side by side, the distance from the back face of the railing to the coping shall be reduced to 0 on the median side.

3. For twin structures and other structures which are placed side by side, the distance from the front face (toe) of the railing to the coping shall be reduced to 1 ft. 4 in. on the median side.

4. All reinforcing bars designated E shall be epoxy coated.

INDIANA DEPARTMENT OF TRANSPORTATION

CONCRETE RAILING, FC AND FT
INDEX AND GENERAL NOTES

SEPTEMBER 2019

STANDARD DRAWING NO. E 706-BRSF-01

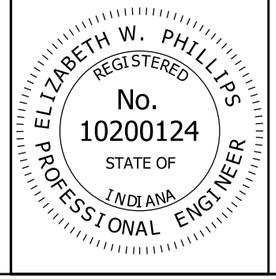

5/2/2019
DESIGN STANDARDS ENGINEER DATE

6/5/2019
CHIEF ENGINEER DATE

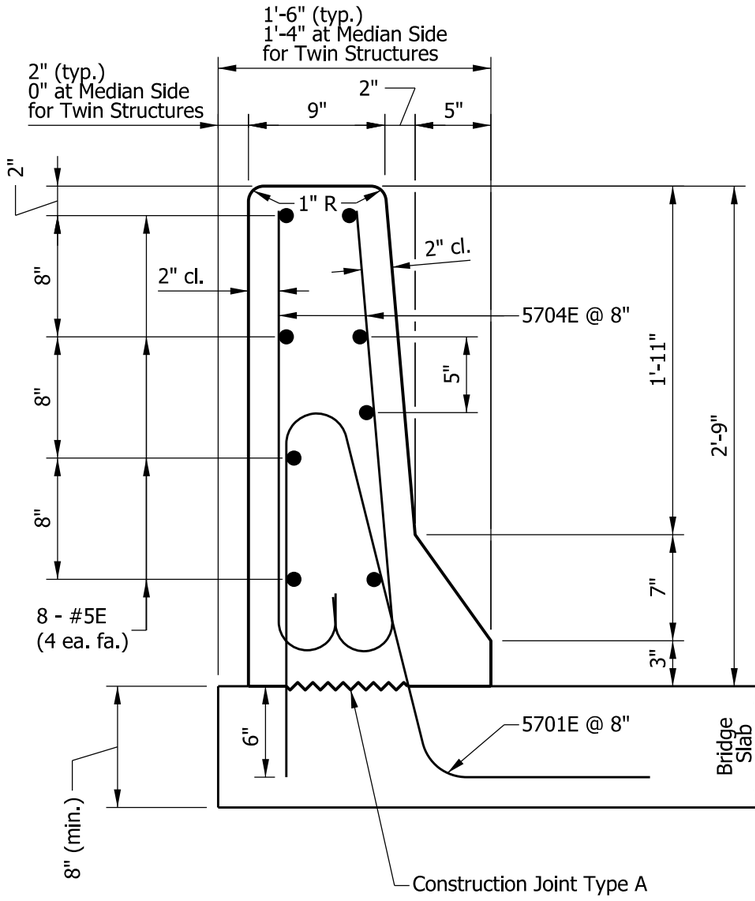

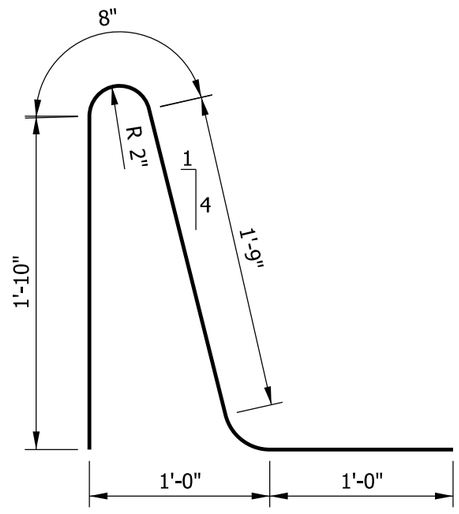

5701E x 5'-6"

5704E x 3'-0"

NOTES:

1. FC railing is acceptable as MASH Test Level 3.
2. See Standard Drawing E 703-BRST-01 for reinforcing-bar bending details and notes.
3. See Standard Drawing E 702-CJTA-01 for construction joint type A details.

QUANTITIES FOR ONE RUNNING FOOT OF RAILING	
Concrete, class C	2.58 CFT
Reinforcing bars*	26.3 LBS

* Wt. of reinforcing bars doesn't include allowance for splices in longitudinal bars

INDIANA DEPARTMENT OF TRANSPORTATION

CONCRETE RAILING, FC

SEPTEMBER 2019

STANDARD DRAWING NO. E 706-BRSF-02

ELIZABETH W. PHILLIPS
REGISTERED
No. 10200124
STATE OF INDIANA
PROFESSIONAL ENGINEER

5/2/2019
DESIGN STANDARDS ENGINEER DATE

6/5/2019
CHIEF ENGINEER DATE

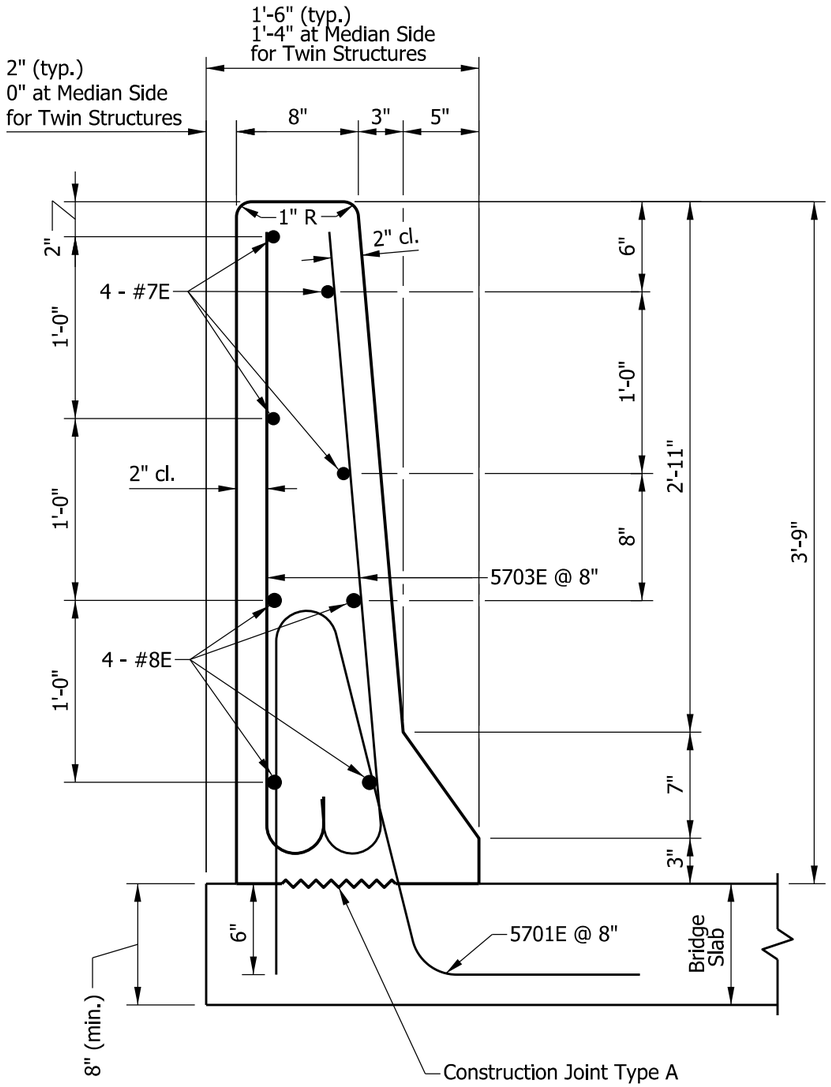

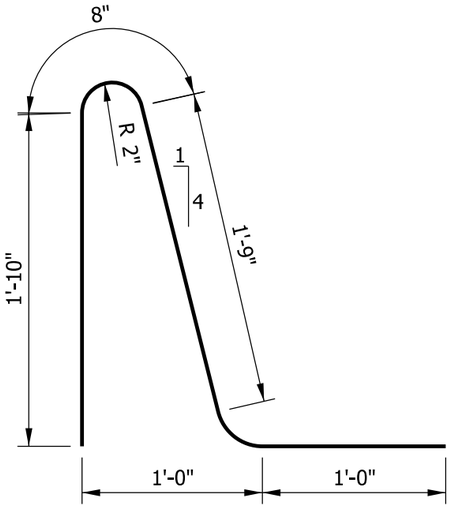

5701E x 5'-6"

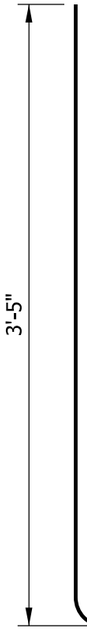

5703E x 4'-0"

NOTES:

1. FT railing is acceptable as MASH Test Level 5.
2. See Standard Drawing E 703-BRST-01 for reinforcing-bar bending details and notes.
3. See Standard Drawing E 702-CJTA-01 for construction joint type A details.

QUANTITIES FOR ONE RUNNING FOOT OF RAILING	
Concrete, class C	3.29 CFT
Reinforcing bars*	40.0 LBS

*Wt. of reinforcing bars doesn't include allowance for splices through longitudinal bars

INDIANA DEPARTMENT OF TRANSPORTATION

CONCRETE RAILING, FT

SEPTEMBER 2019

STANDARD DRAWING NO. E 706-BRSF-03

ELIZABETH W. PHILLIPS
REGISTERED
No. 10200124
STATE OF INDIANA
PROFESSIONAL ENGINEER

5/2/2019
DESIGN STANDARDS ENGINEER DATE

6/5/2019
CHIEF ENGINEER DATE

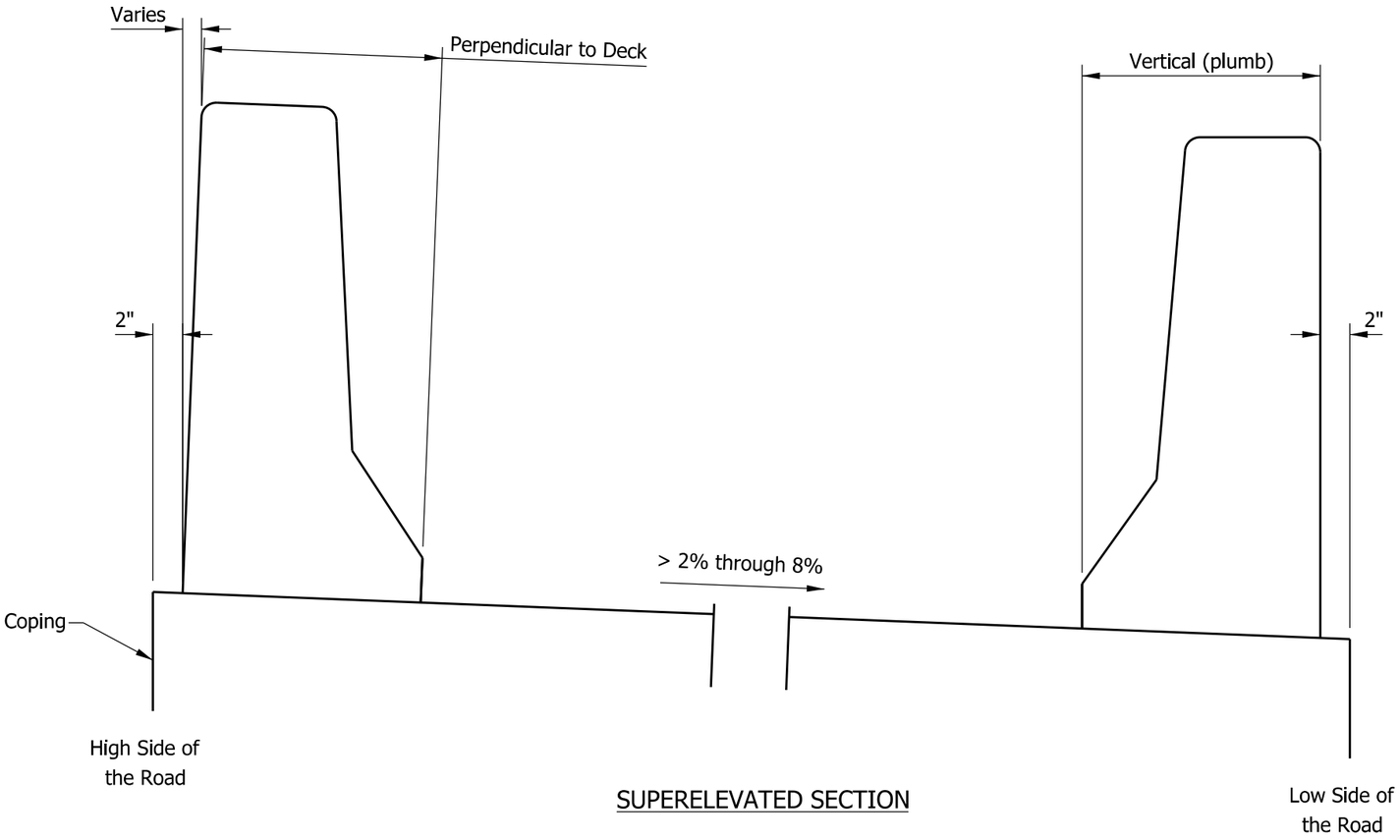

SUPERELEVATED SECTION

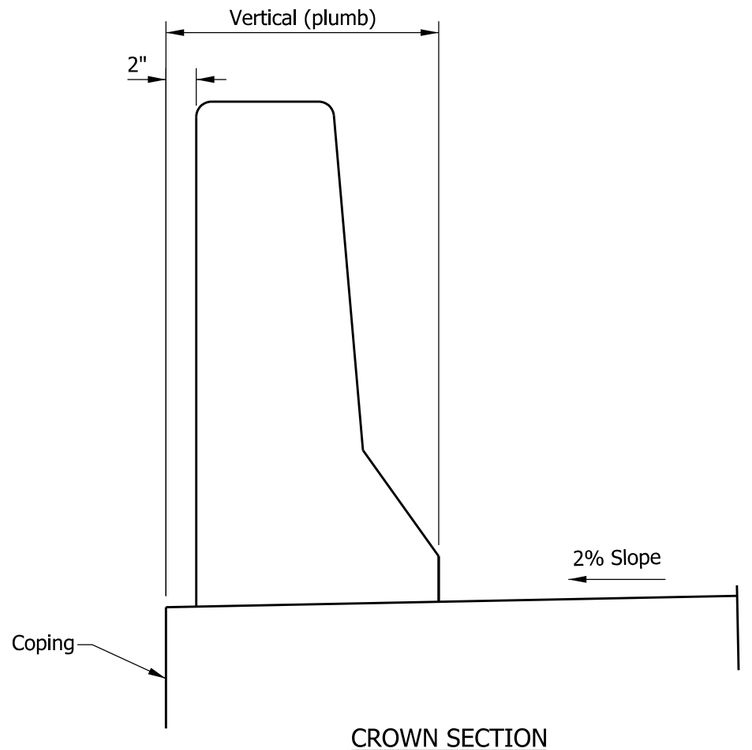

CROWN SECTION

INDIANA DEPARTMENT OF TRANSPORTATION

CONCRETE RAILING PLACEMENT

SEPTEMBER 2019

STANDARD DRAWING NO. E 706-BRSF-04

ELIZABETH W. PHILLIPS
REGISTERED
No. 10200124
STATE OF INDIANA
PROFESSIONAL ENGINEER

5/2/2019
DESIGN STANDARDS ENGINEER DATE

6/5/2019
CHIEF ENGINEER DATE

INDEX

SHEET NO.	SUBJECT
1	Railing, TF-2 Index
2	Railing, TF-2 Elevation, Section, and Rail End Detail
3	Railing, TF-2 Steel Tube and Rail Splice Details
4	Railing, TF-2 Base Plate and Bar Bend Details

INDIANA DEPARTMENT OF TRANSPORTATION

RAILING, TF-2
INDEX

SEPTEMBER 2019

STANDARD DRAWING NO. E 706-BRTF-01

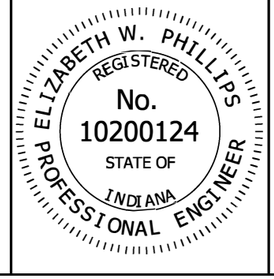

5/2/2019
DESIGN STANDARDS ENGINEER DATE

6/5/2019
CHIEF ENGINEER DATE

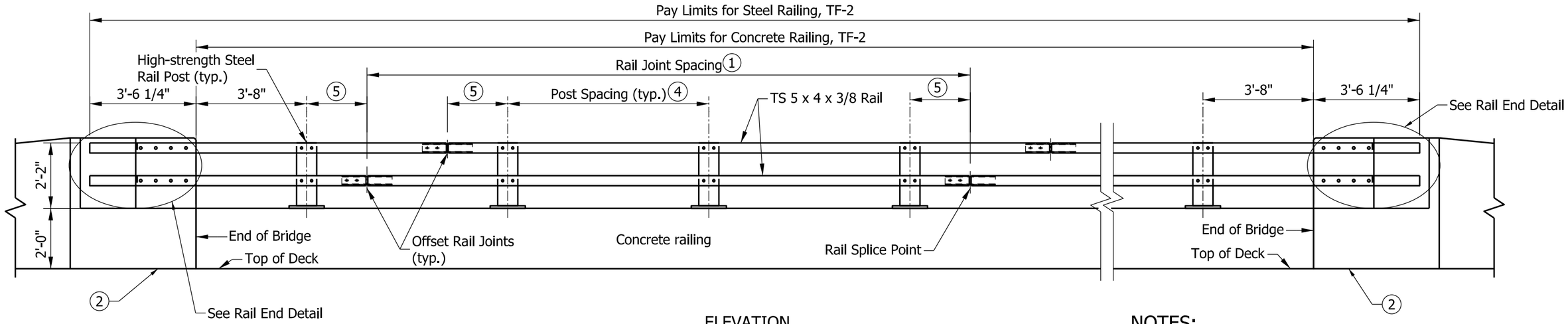

ELEVATION

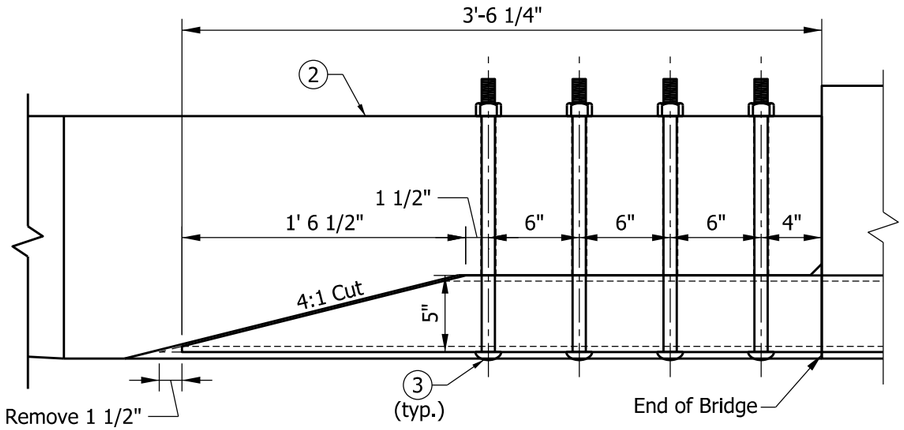

RAIL END DETAIL
(Plan view of both TS 5 x 4 x 3/8 rails)

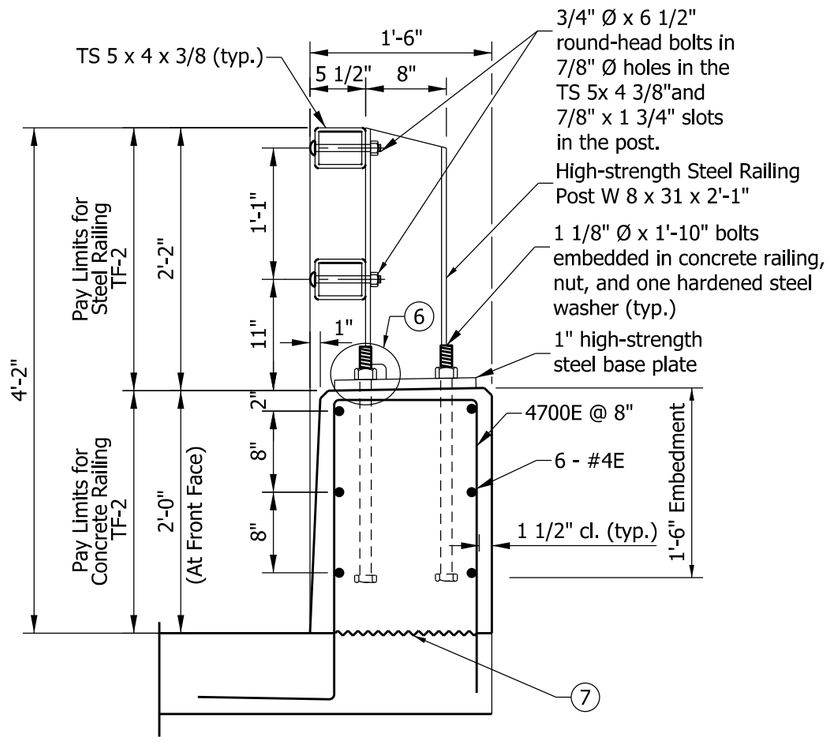

TYPICAL SECTION

QUANTITIES FOR ONE RUNNING FOOT OF RAILING	
Concrete, class C	2.92 CFT
Reinforcing bars*	11.3 LBS

* Wt. of reinforcing bars doesn't include allowance for splices in longitudinal bars

NOTES:

(1) Spacing of joints in tube steel: 20 ft. min. to 40 ft. max.

(2) Concrete bridge railing transition type TTF-2. See Standard Drawing Series E 706-TTTF for details.

(3) 7/8 in. diameter x 1 ft. 6 in. round-head bolt in 1 in. diameter hole. Hole is to be slotted as required for expansion.

(4) Spacing of rail posts: 4 ft. 0 in. min. to 7 ft. 6 in. max.

(5) Distance from centerline of rail splice to centerline of rail post: 18 in. min to 30 in. max.

(6) See Standard Drawing E 706-BRTF-03 for weld access hole detail.

(7) Construction joint type A. See Standard Drawing E 702-CJTA-01 for details.

8. TF-2 railing is acceptable as MASH Test Level 5.

INDIANA DEPARTMENT OF TRANSPORTATION

RAILING, TF-2
ELEVATION, SECTION, AND RAIL END DETAIL

SEPTEMBER 2019

STANDARD DRAWING NO. E 706-BRTF-02

ELIZABETH W. PHILLIPS
REGISTERED
No. 10200124
STATE OF INDIANA
PROFESSIONAL ENGINEER

5/2/2019
DESIGN STANDARDS ENGINEER — DATE

6/5/2019
CHIEF ENGINEER — DATE

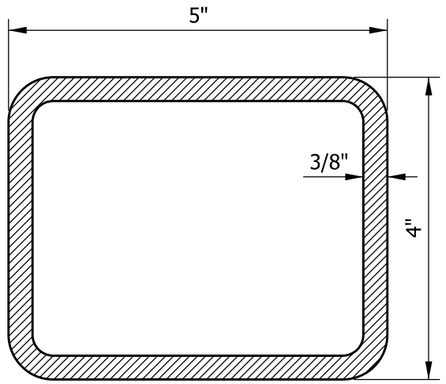

RAIL
TS 5 x 4 x 3/8

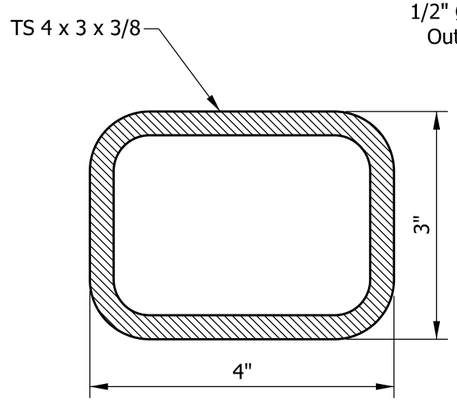

INNER TUBE
TS 4 x 3 x 3/8

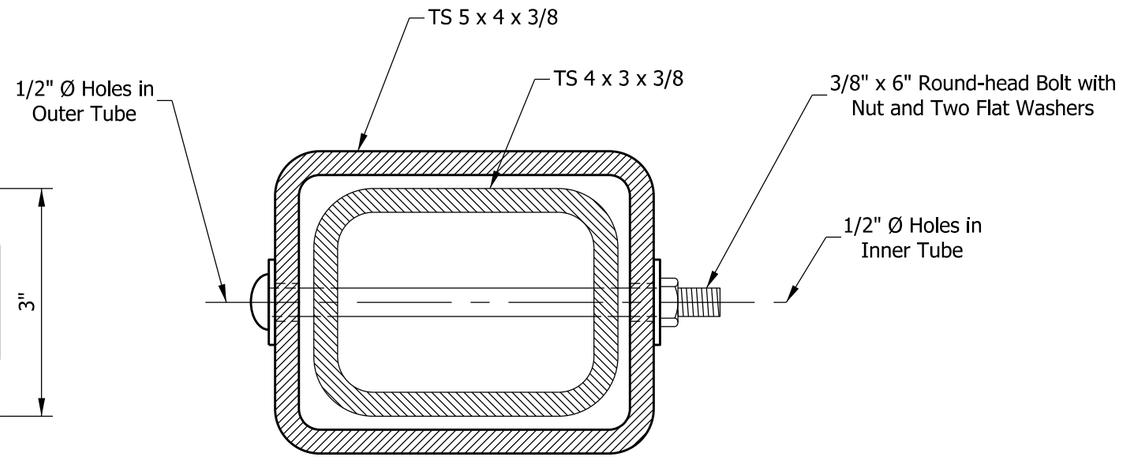

SECTION A-A

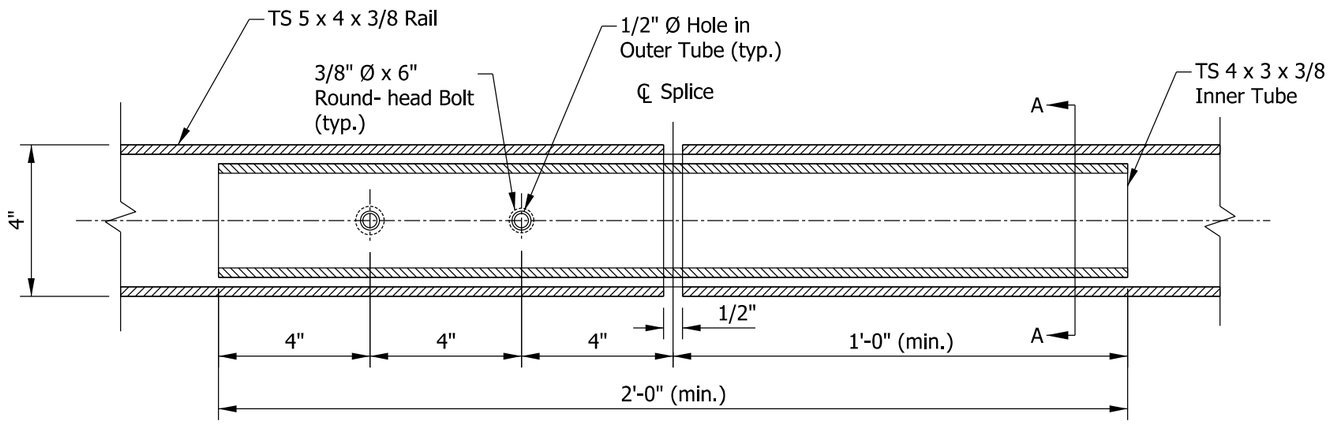

SPLICE ASSEMBLY
FOR TS 5 X 4 X 3/8 RAIL

INDIANA DEPARTMENT OF TRANSPORTATION

RAILING, TF-2
STEEL TUBE AND RAIL SPLICE DETAILS

SEPTEMBER 2019

STANDARD DRAWING NO. E 706-BRTF-03

ELIZABETH W. PHILLIPS
REGISTERED
No.
10200124
STATE OF
INDIANA
PROFESSIONAL ENGINEER

5/29/2019
DESIGN STANDARDS ENGINEER DATE

6/5/2019
CHIEF ENGINEER DATE

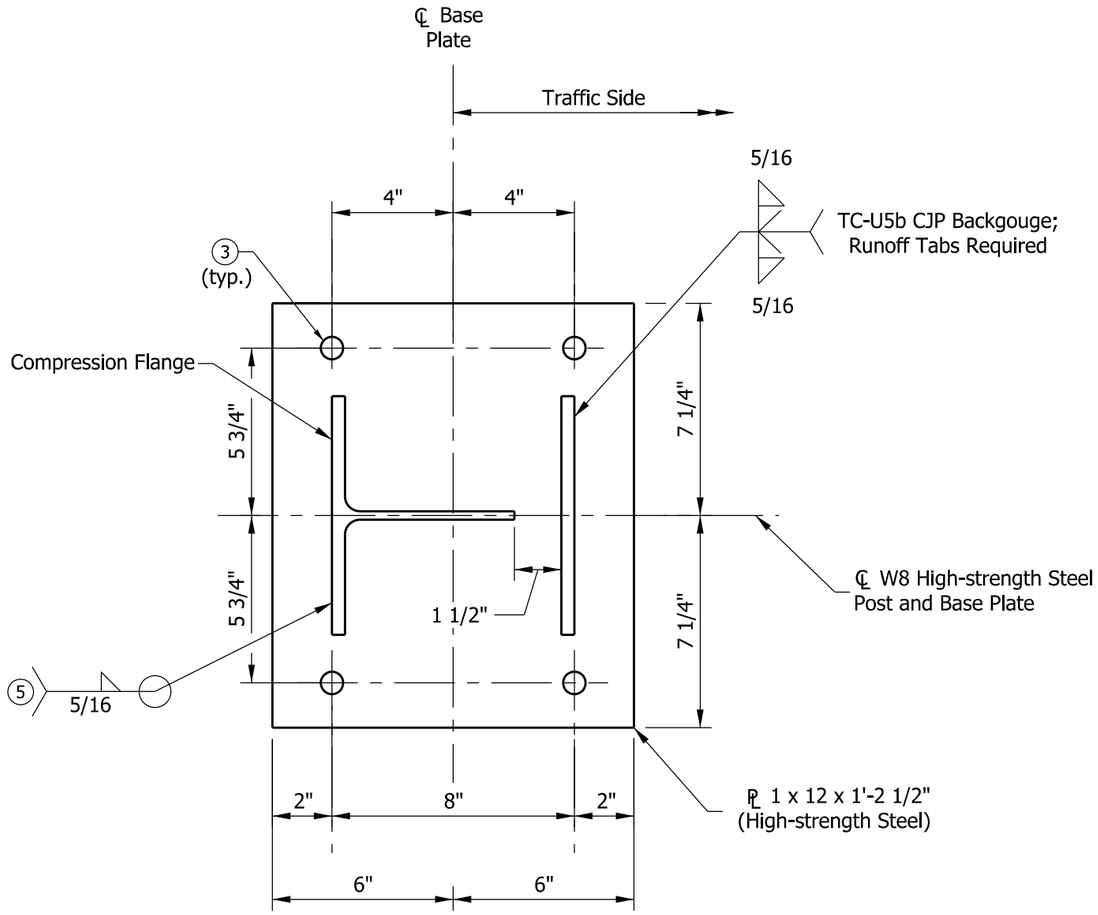

BASE PLATE DETAIL

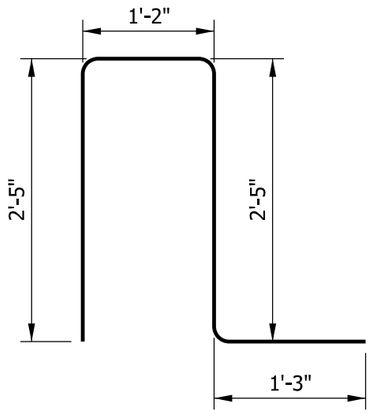

4700E x 7'-3"

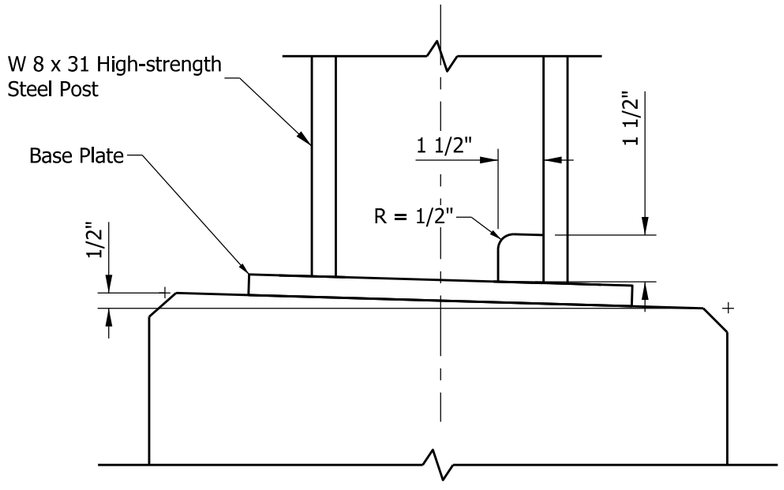

WELD ACCESS HOLE DETAIL

NOTES:

1. See Standard Drawing E 703-BRST-01 for reinforcing-bar bending details and notes.
2. All chamfered edges shall be 3/4 in.

(3) 1 3/8 in. diameter holes for 1 1/8 in. anchor bolts.

4. All reinforcing bars designated E shall be epoxy coated.

(5) Mill to bear flush with base plate prior to welding to ensure that the final position of the post is vertical.

INDIANA DEPARTMENT OF TRANSPORTATION

RAILING, TF-2
BASE PLATE AND BAR BEND DETAILS

SEPTEMBER 2019

STANDARD DRAWING NO. E 706-BRTF-04

ELIZABETH W. PHILLIPS
REGISTERED
No. 10200124
STATE OF INDIANA
PROFESSIONAL ENGINEER

5/29/2019
DESIGN STANDARDS ENGINEER — DATE

6/5/2019
CHIEF ENGINEER — DATE

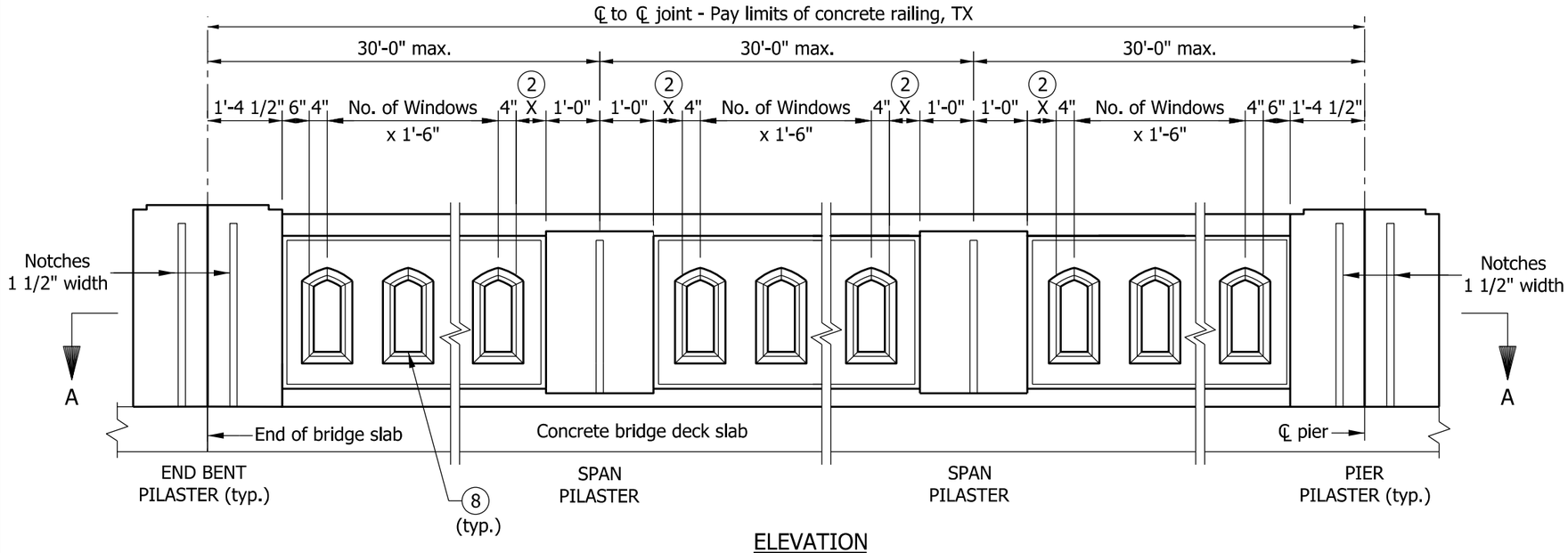

ELEVATION

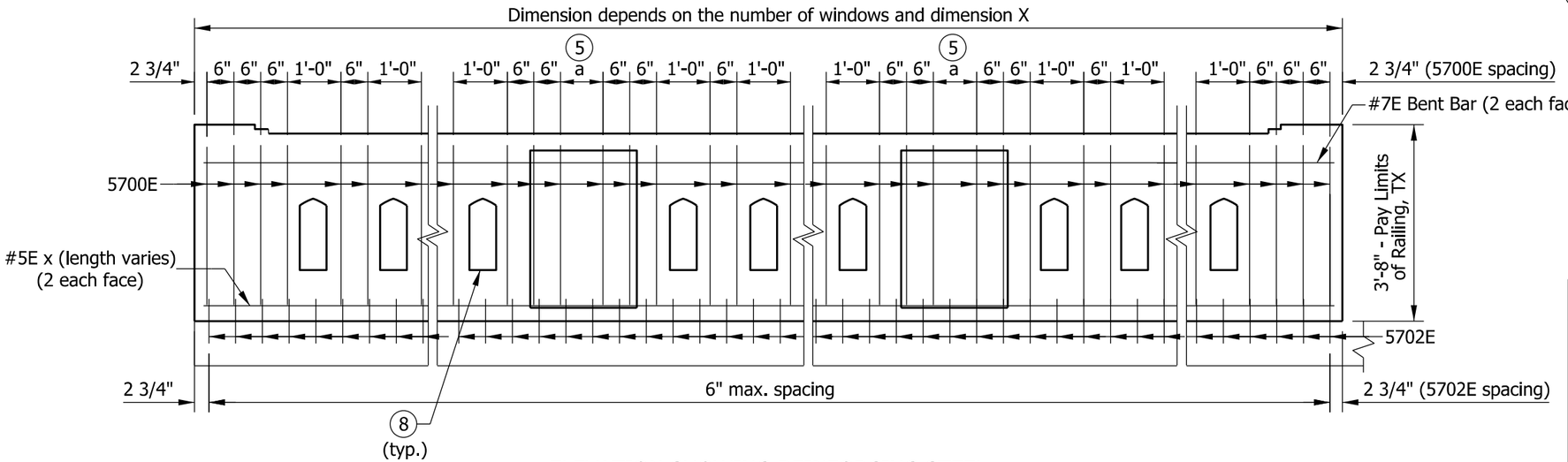

ELEVATION SHOWING REINFORCING STEEL

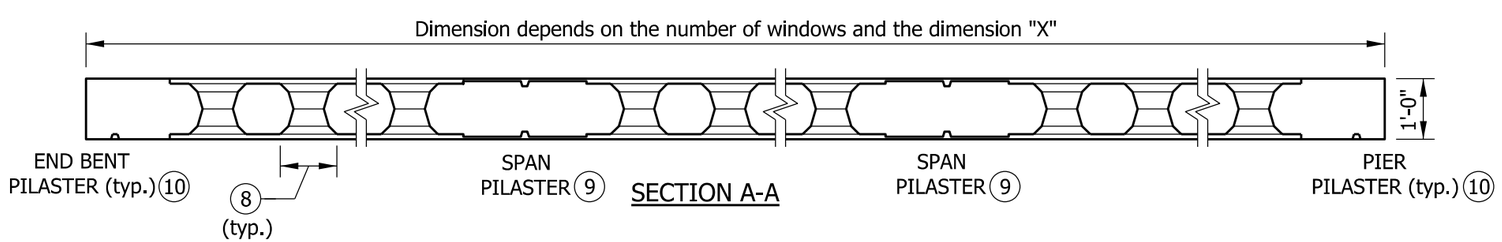

SECTION A-A

NOTES

1. See Standard Drawing E 706-BRTX-02, -03, and -04 for sections.
2. Select the number of windows and adjust dimension X to fit the span length.
3. Span pilasters may be omitted for a short span with X ≤ 2'-0".
4. Span pilasters are for aesthetic purposes only. Omitting span pilasters does not decrease the integrity of the railing.
5. Dimension a = 2X + 3 1/2". Space bars within dimension a equally ≤ 6".
6. See Standard Drawing E 706-TTTX-01 for Concrete Bridge Railing Transition, TTTX.
7. All reinforcing bars designated E shall be epoxy coated.
8. Window opening. See Standard Drawing E 706-BRTX-02 for details.
9. See Standard Drawing E 706-BRTX-03 for span pilaster details.
10. See Standard Drawing E 706-BRTX-04 for pier and end bent pilaster details.

INDIANA DEPARTMENT OF TRANSPORTATION

RAILING, TX
TYPICAL PANEL

SEPTEMBER 2012

STANDARD DRAWING NO. E 706-BRTX-01

RICHARD L. VanCLEAVE REGISTERED No. 9750 STATE OF INDIANA PROFESSIONAL ENGINEER

/s/ Richard L. VanCleave 09/04/12
SUPERVISOR, ROADWAY STANDARDS DATE

/s/ Mark A. Miller 09/04/12
CHIEF ENGINEER DATE

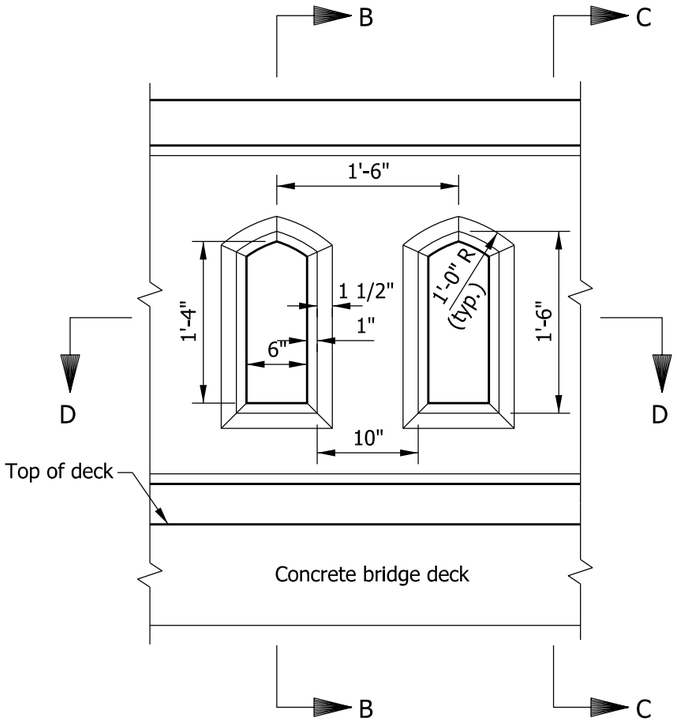

ELEVATION

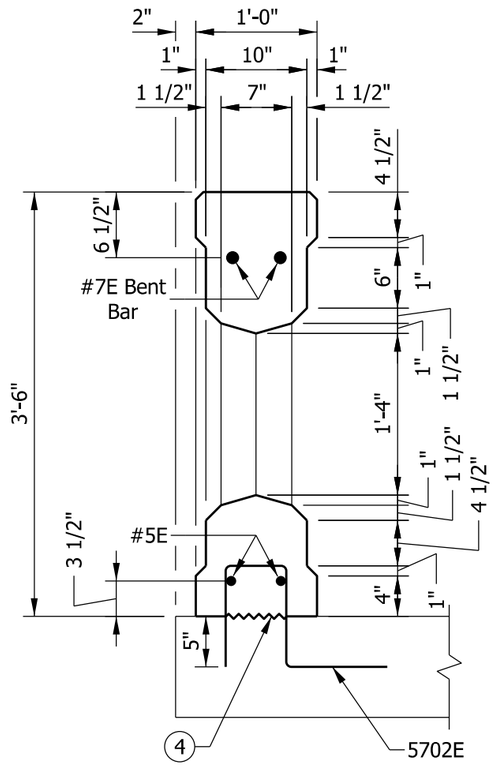

SECTION B-B

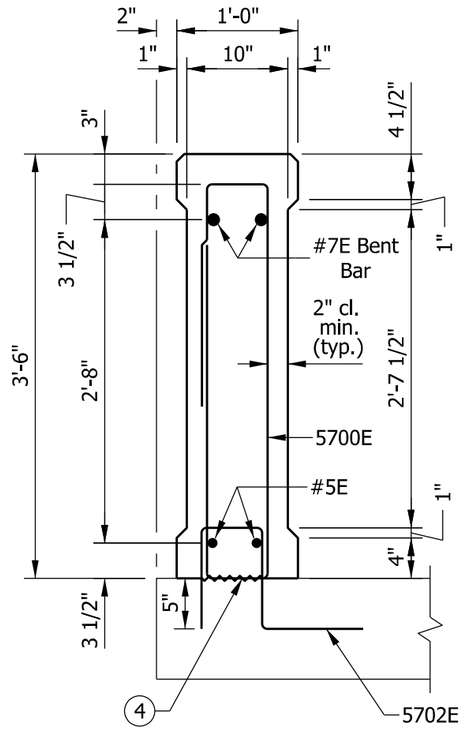

SECTION C-C

NOTES

1. All reinforcing bars designated E shall be epoxy coated.
2. All chamfered edges shall be 3/4".
3. See Standard Drawing E 706-BRTX-04 for reinforcing-bar diagrams.

(4) Construction joint type A. See Standard Drawing E 702-CJTA-01 for details.

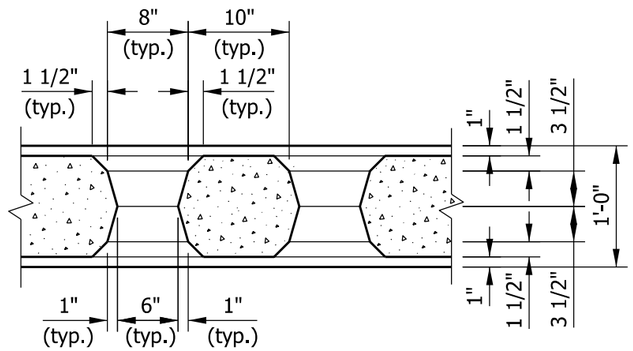

SECTION D-D

INDIANA DEPARTMENT OF TRANSPORTATION

RAILING, TX
WINDOW DETAILS

SEPTEMBER 2012

STANDARD DRAWING NO. E 706-BRTX-02

RICHARD L. VanCLEAVE
REGISTERED
No. 9750
STATE OF INDIANA
PROFESSIONAL ENGINEER

/s/ Richard L. VanCleave 09/04/12
SUPERVISOR, ROADWAY STANDARDS DATE

/s/ Mark A. Miller 09/04/12
CHIEF ENGINEER DATE

NOTES

1. All reinforcing bars designated E shall be epoxy coated.
2. All chamfered edges shall be 3/4".
3. See Standard Drawing E 706-BRTX-04 for reinforcing-bar diagrams.
4. Construction joint type A. See Standard Drawing E 702-CJTA-01 for details.
5. Adjust dimension X to fit the span length, depending upon the number of window openings.

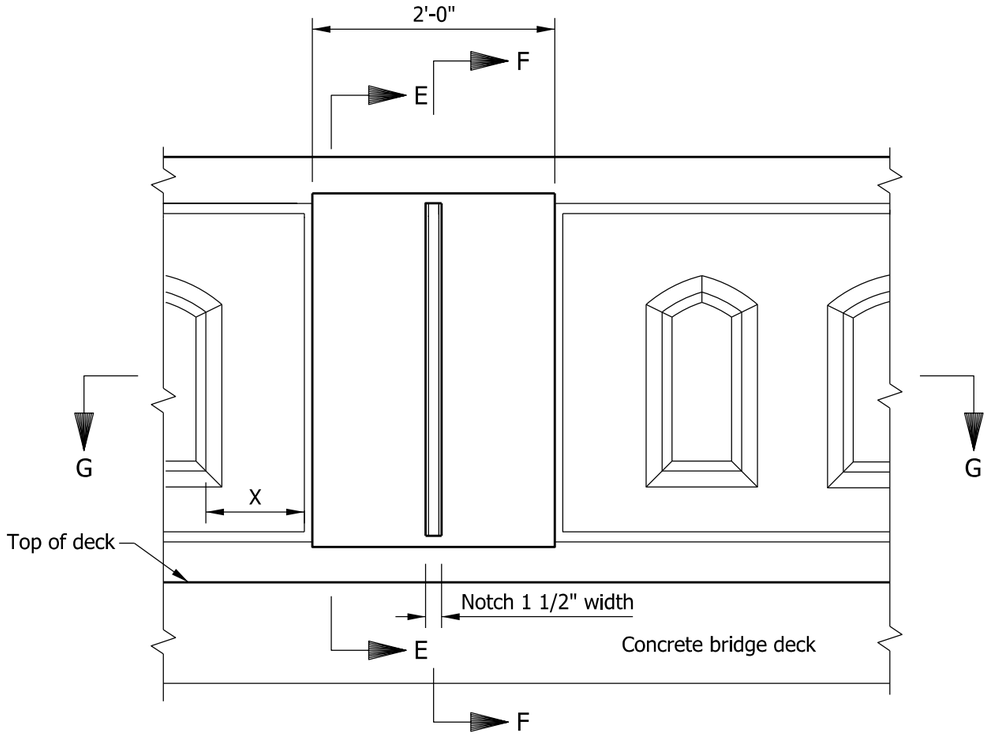

ELEVATION

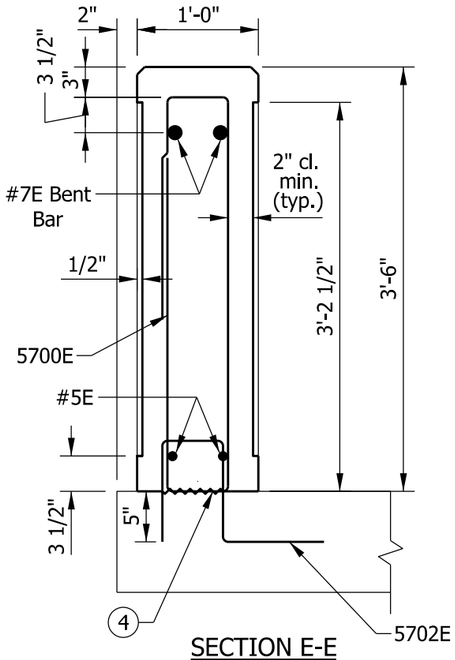

SECTION E-E

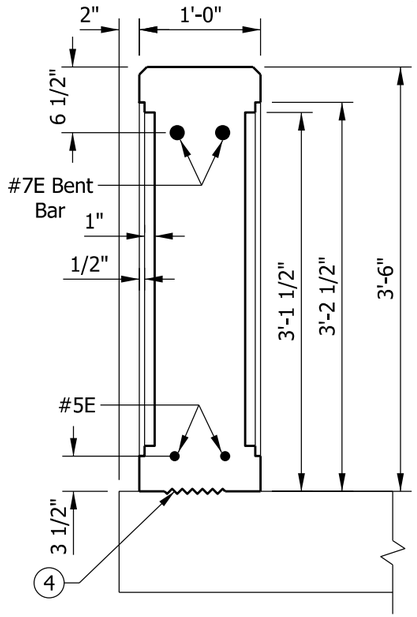

SECTION F-F

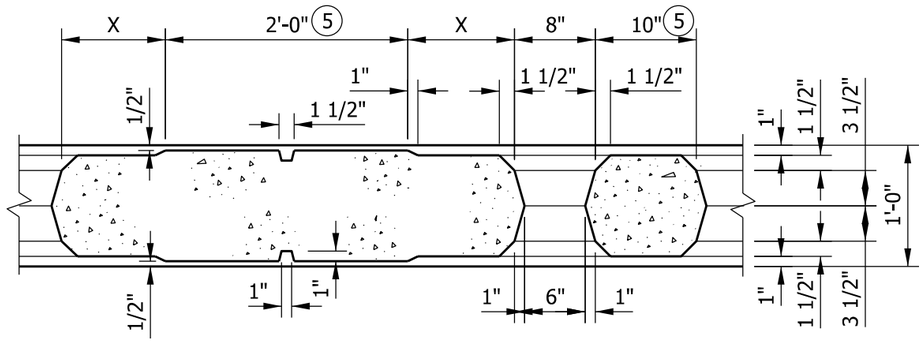

SECTION G-G

INDIANA DEPARTMENT OF TRANSPORTATION	
RAILING, TX SPAN PILASTER SEPTEMBER 2012	
STANDARD DRAWING NO. E 706-BRTX-03	
RICHARD L. VanCLEAVE REGISTERED No. 9750 STATE OF INDIANA PROFESSIONAL ENGINEER	/s/ Richard L. VanCleave 09/04/12 SUPERVISOR, ROADWAY STANDARDS DATE /s/ Mark A. Miller 09/04/12 CHIEF ENGINEER DATE

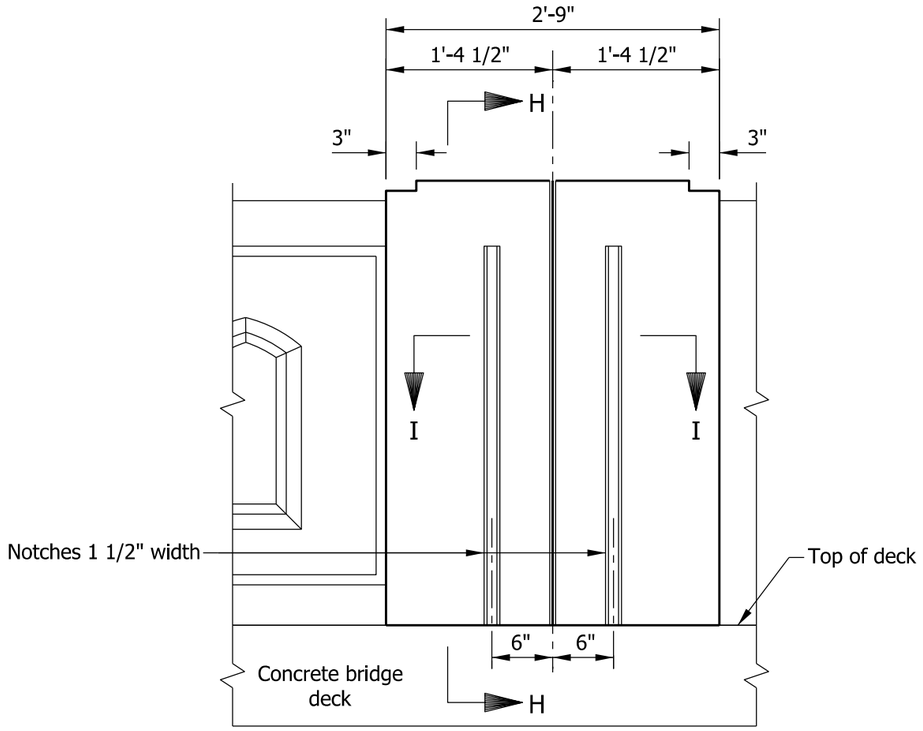

ELEVATION

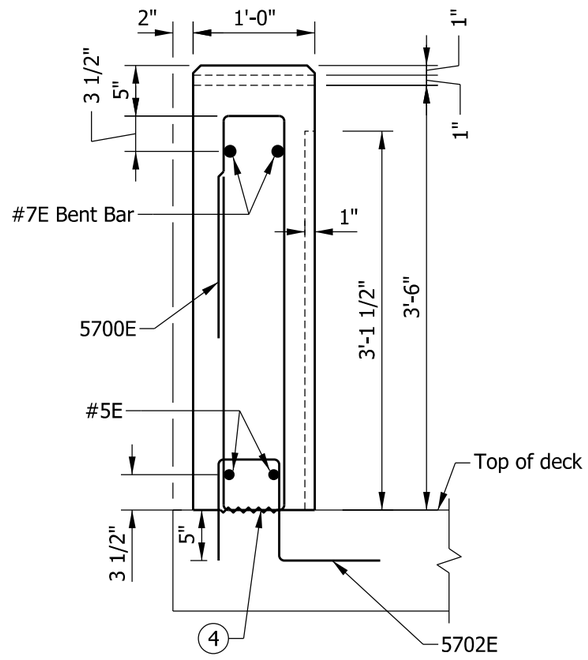

SECTION H-H

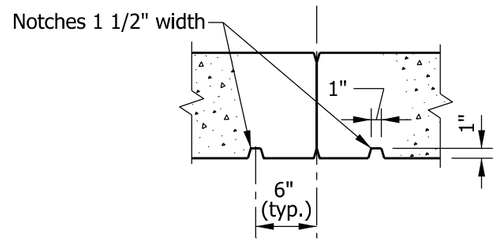

SECTION I-I

NOTES

1. All reinforcing bars designated E shall be epoxy coated.
2. See Standard Drawing E 703-BRST-01 for reinforcing-bar bending details and notes.
3. All chamfered edges shall be 3/4".

(4) Construction joint type A. See Standard Drawing E 702-CJTA-01 for details.

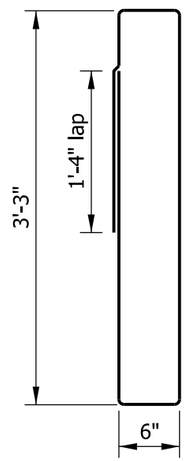

5700E x 8'-10"

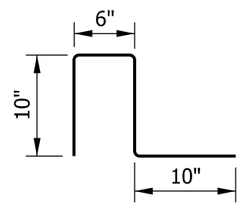

5702E x 2'-2"

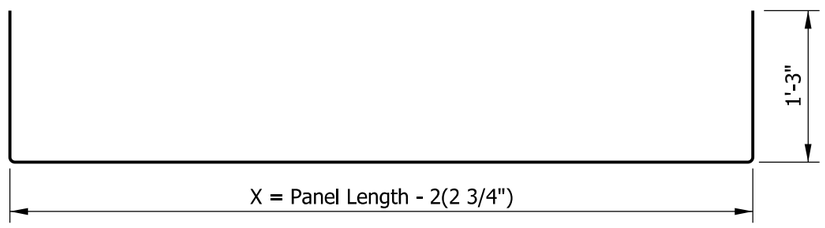

#7E BENT BAR x (X + 2'-6")

INDIANA DEPARTMENT OF TRANSPORTATION

RAILING, TX
PIER OR END BENT PILASTER

SEPTEMBER 2012

STANDARD DRAWING NO. E 706-BRTX-04

RICHARD L. VanCLEAVE REGISTERED No. 9750 STATE OF INDIANA PROFESSIONAL ENGINEER

/s/ Richard L. VanCleave 09/04/12
SUPERVISOR, ROADWAY STANDARDS DATE

/s/ Mark A. Miller 09/04/12
CHIEF ENGINEER DATE

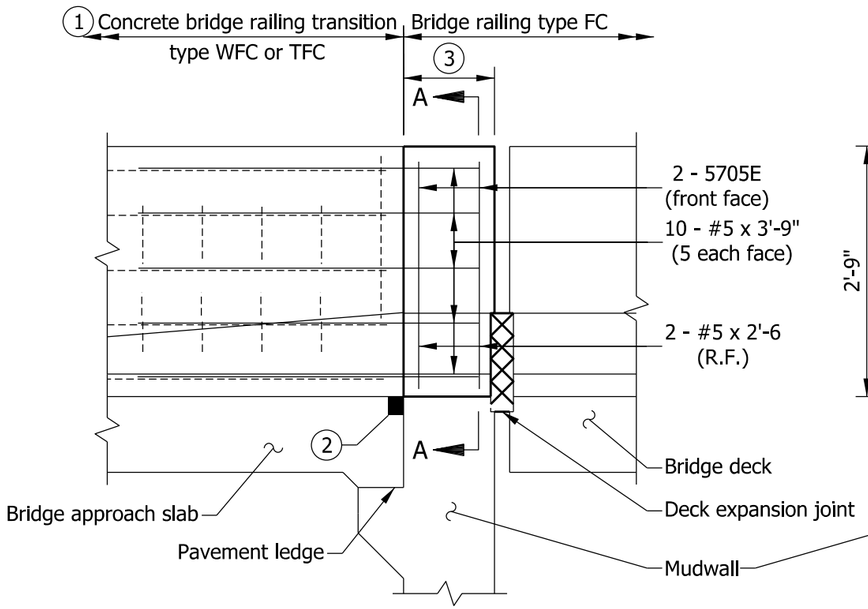

PART ELEVATION

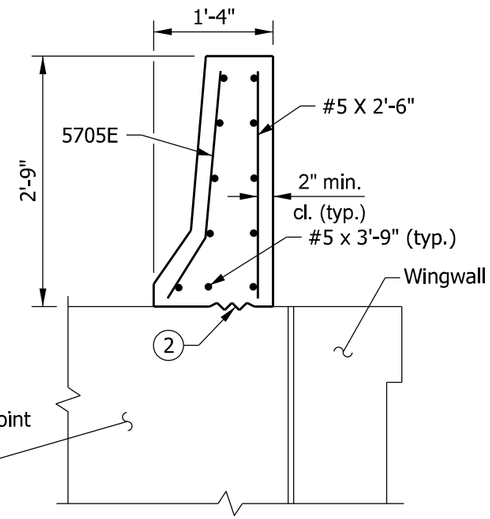

SECTION A-A

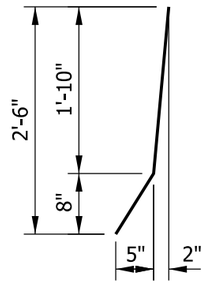

5705E x 2'-8"

NOTES

1. See Standard Drawings E 706-TWFC-01 through -03 for concrete bridge railing transition type WFC. See Standard Drawings E 706-TTFC-01 through -03 for concrete bridge railing transition type TFC.
2. See Standard Drawing E 609-BRJT-01 for joint type I-A.
3. This shall be part of the concrete bridge railing, but it shall be poured with the concrete bridge-railing transition. The minimum length shall be equal to the width of the mudwall. See Standard Drawing E 706-BRSF-01 for bridge railing type FC dimensions.
4. See Standard Drawing E 703-BRST-01 for reinforcing-bar bending details and notes.

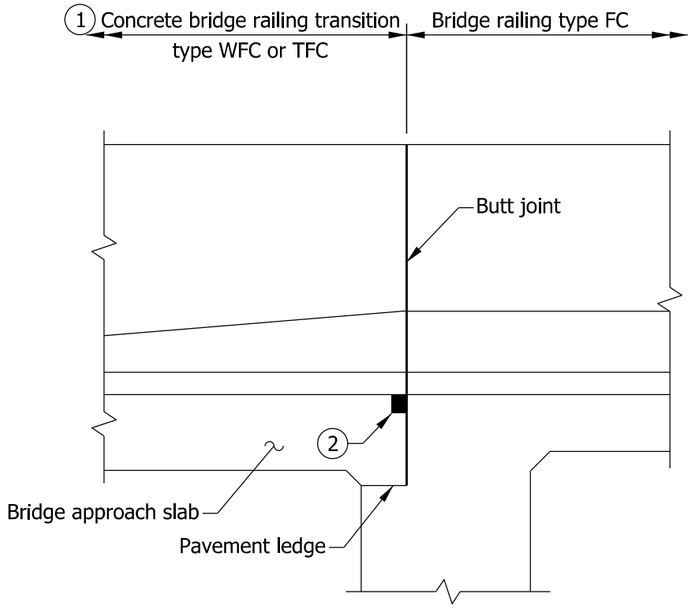

DETAIL AT INTEGRAL END BENT

INDIANA DEPARTMENT OF TRANSPORTATION

BRIDGE RAILING TRANSITION WFC OR TFC DETAILS AT END BENT

SEPTEMBER 2012

STANDARD DRAWING NO. E 706-CBRT-01

RICHARD L. VanCLEAVE REGISTERED No. 9750 STATE OF INDIANA PROFESSIONAL ENGINEER

/s/ Richard L. Van Cleave 09/04/12
SUPERVISOR, ROADWAY STANDARDS DATE

/s/ Mark A. Miller 09/04/12
CHIEF ENGINEER DATE

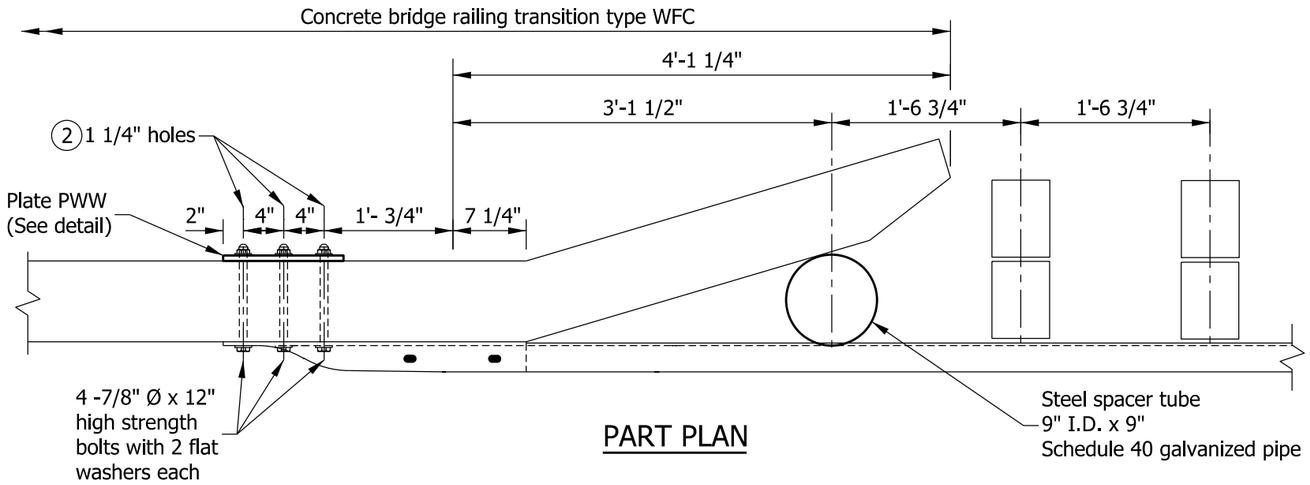

PART PLAN

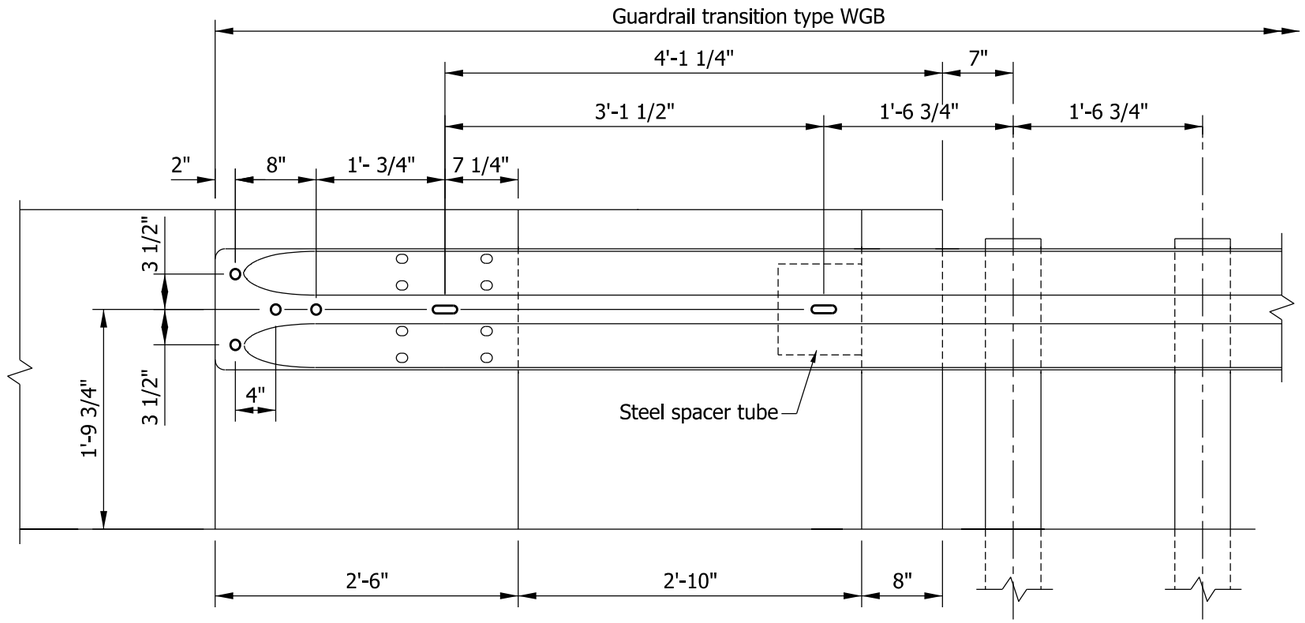

PART ELEVATION

NOTES

1. See Standard Drawing E 706-TWFC-01 through -03 for concrete bridge railing transition type WFC. See Standard Drawings E 601-TWGB-01 through -03 for guardrail transition type WGB .

(2) Preformed holes, for connection of the guardrail transition type WGB to the end of the concrete bridge railing transition type WFC.

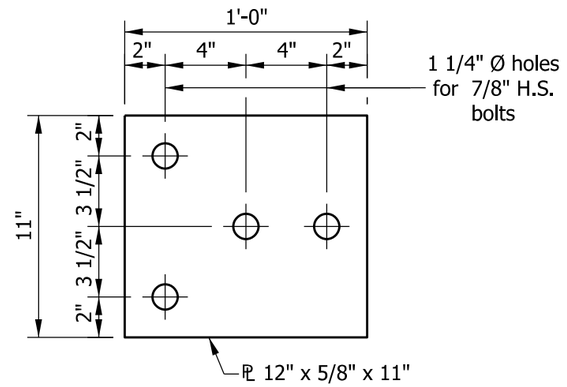

PLATE PWW

INDIANA DEPARTMENT OF TRANSPORTATION

BRIDGE RAILING TRANSITION WFC
ATTACHMENT OF GUARDRAIL

SEPTEMBER 2012

STANDARD DRAWING NO. E 706-CBRT-02

RICHARD L. VanCLEAVE REGISTERED No. 9750 STATE OF INDIANA PROFESSIONAL ENGINEER

/s/ Richard L. Van Cleave 09/04/12
SUPERVISOR, ROADWAY STANDARDS DATE

/s/ Mark A. Miller 09/04/12
CHIEF ENGINEER DATE

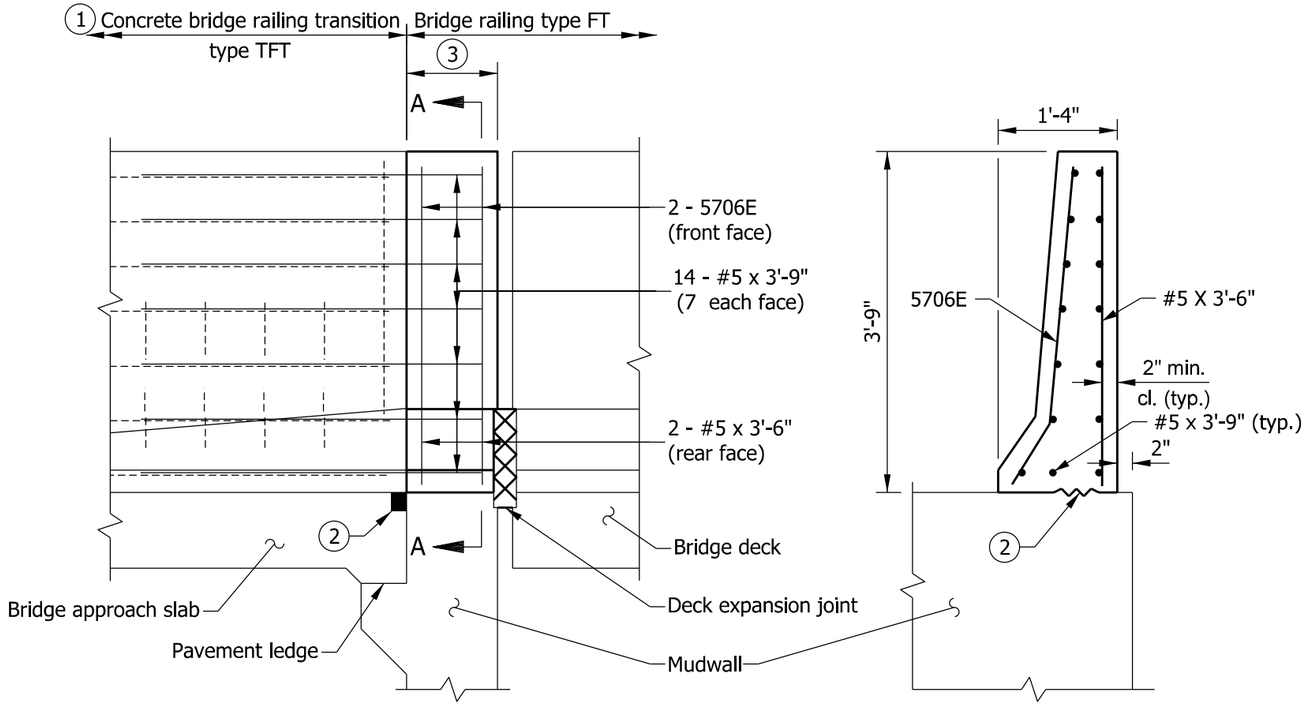

PART ELEVATION

SECTION A-A

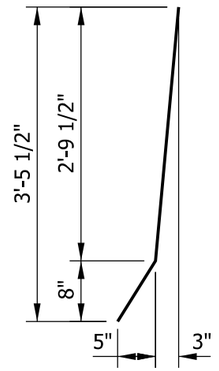

5706E x 3'-7"

NOTES

1. See Standard Drawings E 706-TTFT-01 through -03 for concrete bridge railing transition type TFT details.
2. See Standard Drawing E 609-BRJT-01 for joint type I-A.
3. This shall be part of the concrete bridge railing, but it shall be poured with the concrete bridge-railing transition. The minimum length shall be equal to the width of the mudwall. See Standard Drawing E 706-BRSF-02 for bridge railing type FT dimensions.
4. See Standard Drawing E 703-BRST-01 for reinforcing-bar bending diagrams and notes.

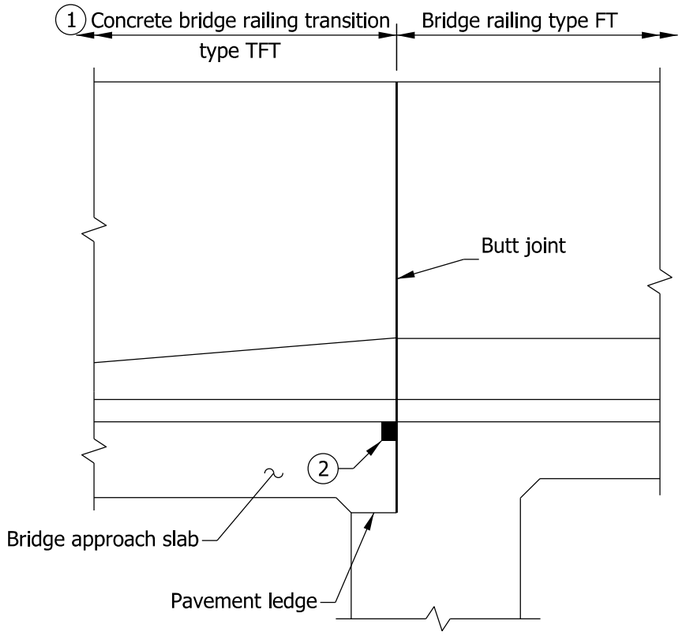

DETAIL AT INTEGRAL END BENT

INDIANA DEPARTMENT OF TRANSPORTATION

BRIDGE RAILING TRANSITION TFT
DETAILS AT END BENT

SEPTEMBER 2012

STANDARD DRAWING NO. E 706-CBRT-03

RICHARD L. VanCLEAVE REGISTERED No. 9750 STATE OF INDIANA PROFESSIONAL ENGINEER

/s/ Richard L. Van Cleave 09/04/12
SUPERVISOR, ROADWAY STANDARDS DATE

/s/ Mark A. Miller 09/04/12
CHIEF ENGINEER DATE

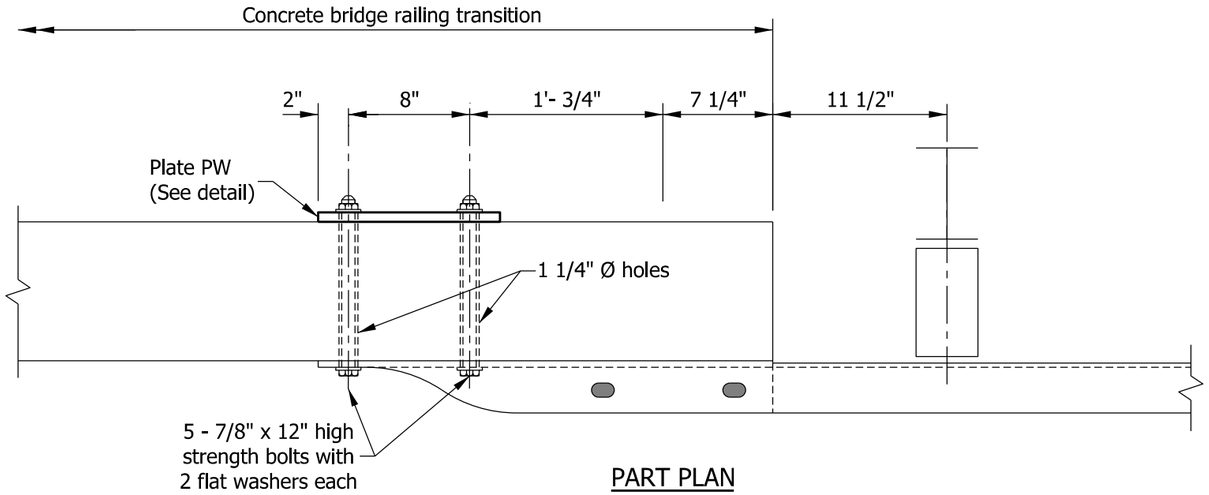

PART PLAN

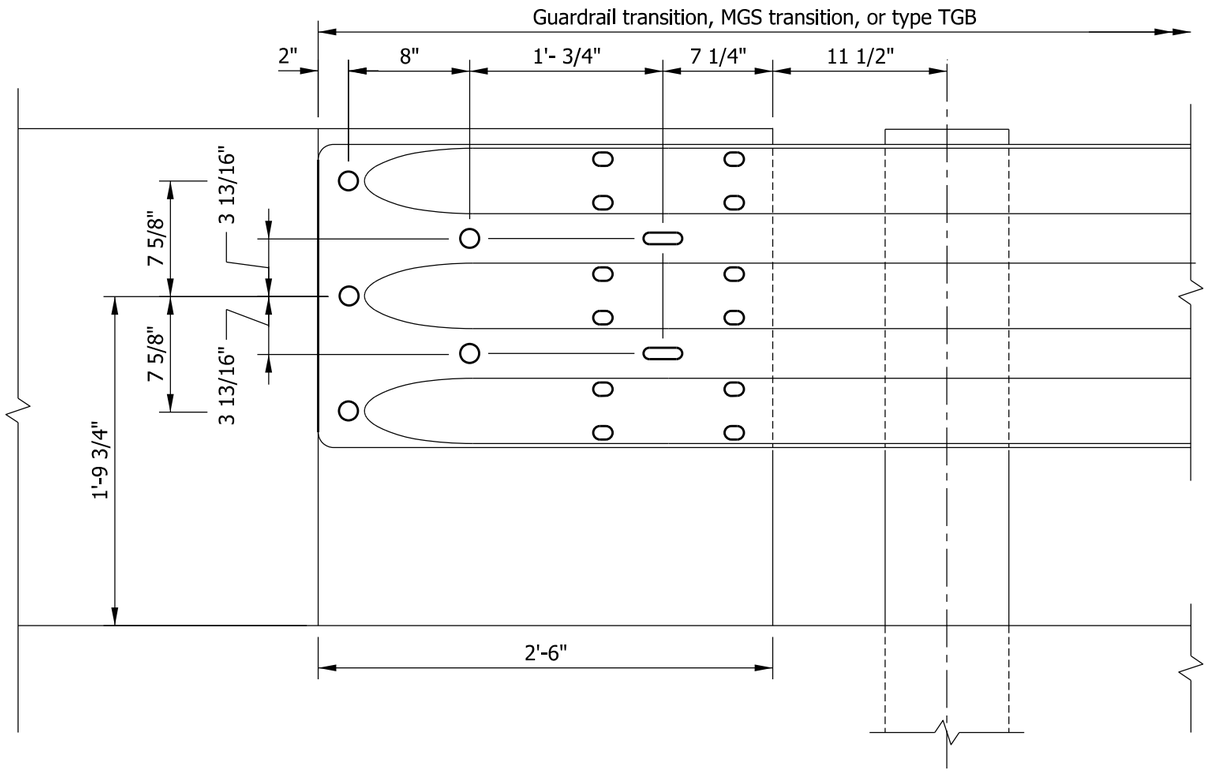

PART ELEVATION

NOTES

1. • See Standard Drawing series E 706-TTFC for concrete bridge railing transition type TFC.
   • See Standard Drawing series E 706-TTFT for concrete bridge railing transition type TFT.
   • See Standard Drawing series E 706-TTPP for concrete bridge railing transition types TPF-1 and TPS-1.
   • See Standard Drawing series E 706-TTTF for concrete bridge railing transition type TTF.
   • See Standard Drawing series E 706-TTTX for concrete bridge railing transition type TTX.

2. Preformed holes, for connection of the guardrail transition, MGS transition, or type TGB to the end of the concrete bridge railing transition.

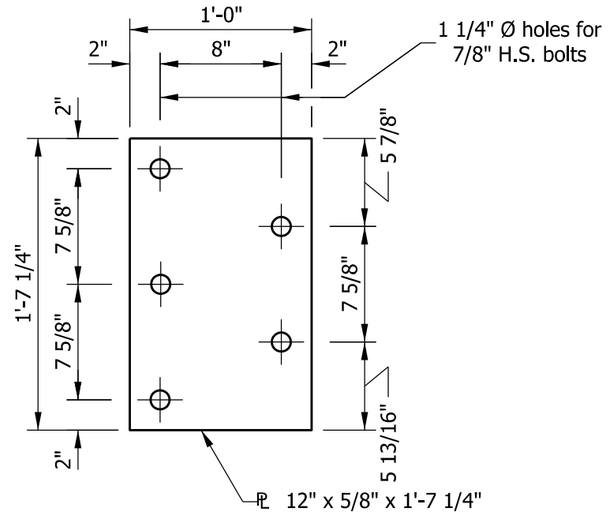

PLATE PW

INDIANA DEPARTMENT OF TRANSPORTATION

BRIDGE RAILING TRANSITION
ATTACHMENT OF GUARDRAIL

SEPTEMBER 2012

STANDARD DRAWING NO. E 706-CBRT-04

RICHARD L. VanCLEAVE
REGISTERED
No. 9750
STATE OF INDIANA
PROFESSIONAL ENGINEER

/s/ Richard L. Van Cleave 09/04/12
SUPERVISOR, ROADWAY STANDARDS DATE

/s/ Mark A. Miller 09/04/12
CHIEF ENGINEER DATE

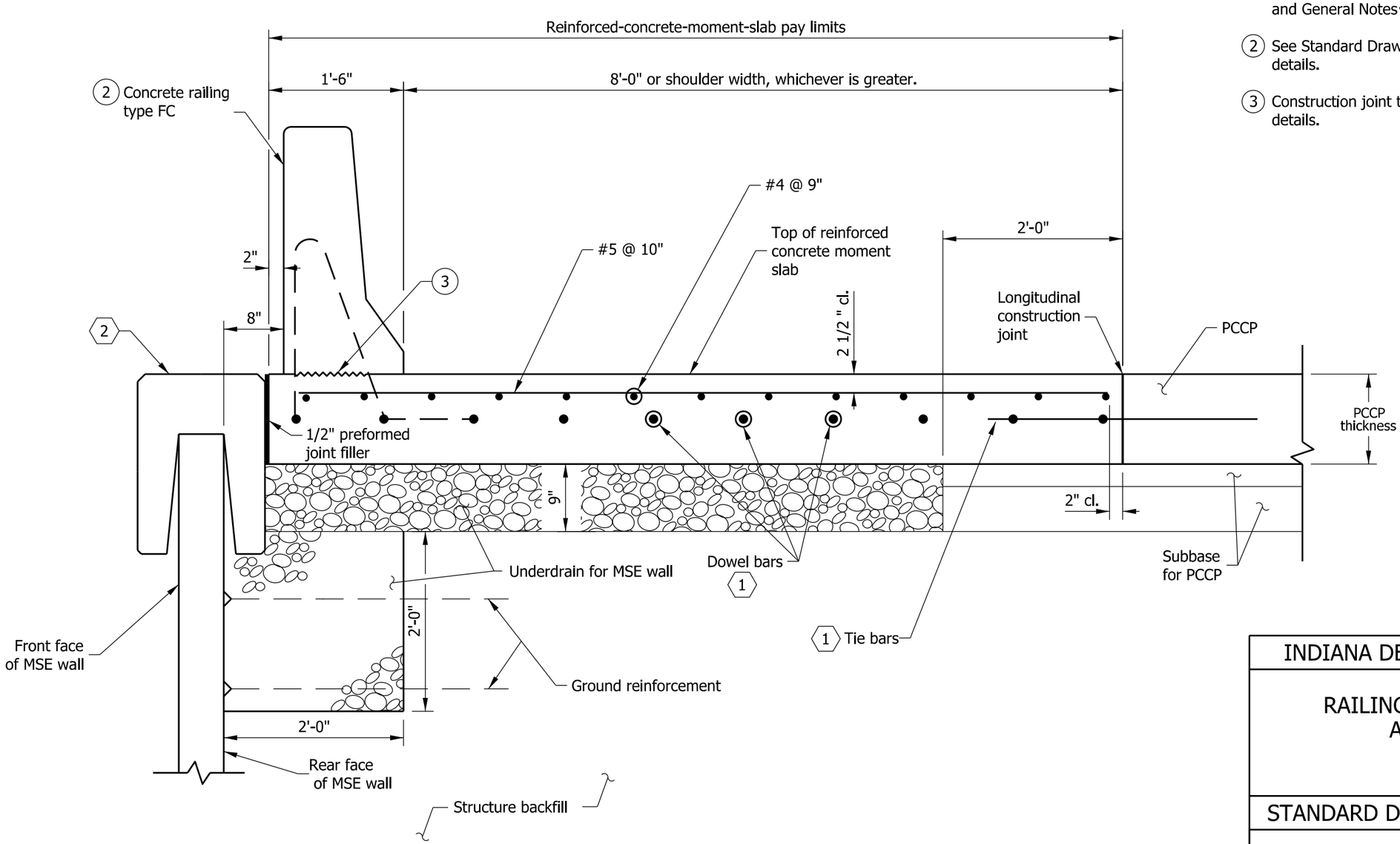

NOTES:

1. See Standard Drawing E 706-MSRW-10 for reinforcing-bar diagrams and General Notes⬡.

(2) See Standard Drawing E 706-BRSF-01 for concrete railing type FC details.

(3) Construction joint type A. See Standard Drawing E 702-CJTA-01 for details.

INDIANA DEPARTMENT OF TRANSPORTATION

RAILING TYPE FC AND MOMENT SLAB ASIDE MSE WALL - PCCP

SEPTEMBER 2012

STANDARD DRAWING NO. E 706-MSRW-01

RICHARD L. VanCLEAVE REGISTERED No. 9750 STATE OF INDIANA PROFESSIONAL ENGINEER

/s/ Richard L. Van Cleave 09/04/12
DESIGN STANDARDS ENGINEER DATE

/s/ Mark A. Miller 09/04/12
CHIEF ENGINEER DATE

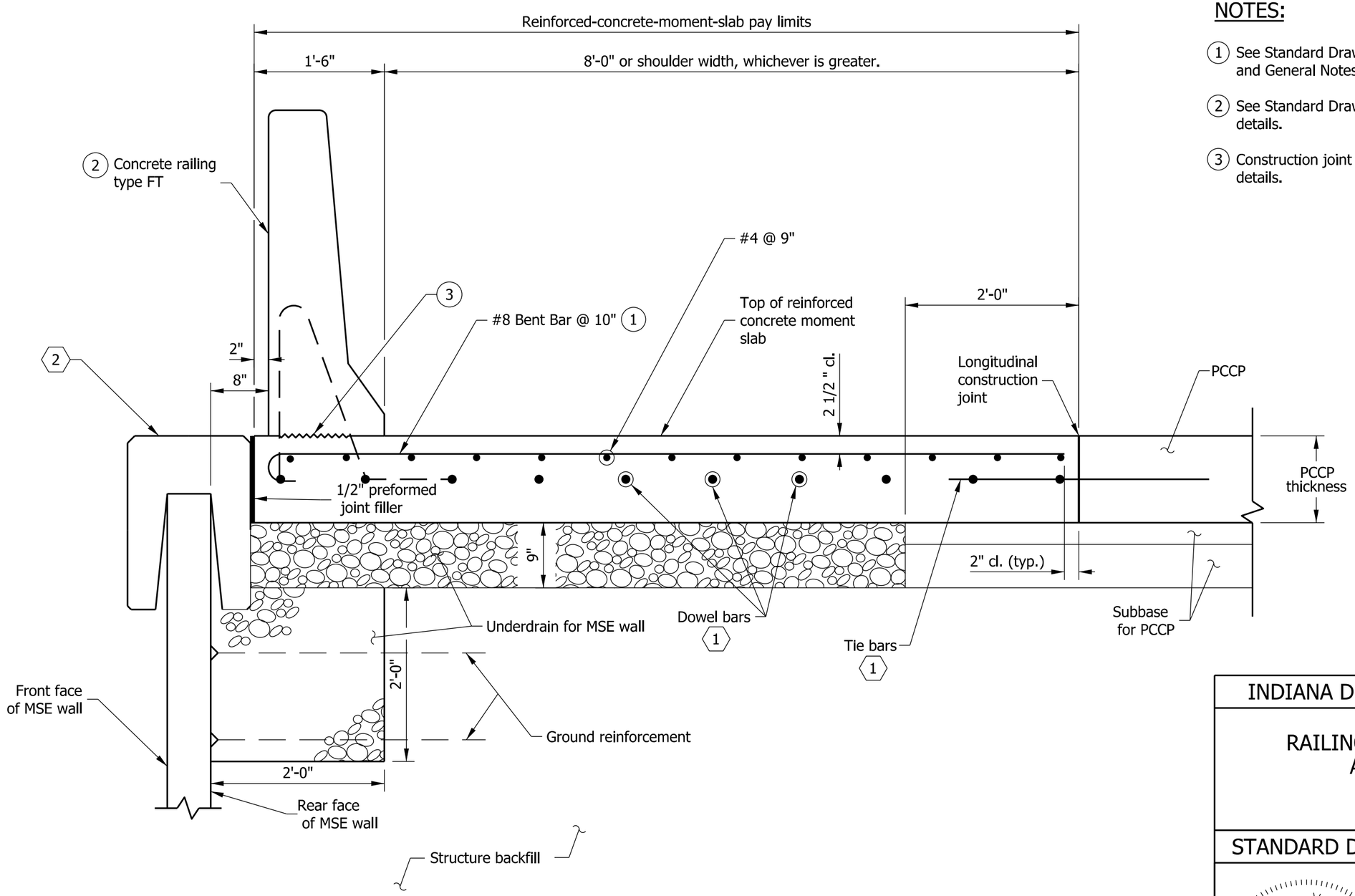

NOTES:

1. See Standard Drawing E 706-MSRW-10 for reinforcing-bar diagrams and General Notes⬡.
2. See Standard Drawing E 706-BRSF-02 for concrete railing type FT details.
3. Construction joint type A. See Standard Drawing E 702-CJTA-01 for details.

INDIANA DEPARTMENT OF TRANSPORTATION

RAILING TYPE FT AND MOMENT SLAB
ASIDE MSE WALL - PCCP

SEPTEMBER 2012

STANDARD DRAWING NO. E 706-MSRW-02

RICHARD L. VanCLEAVE REGISTERED No. 9750 STATE OF INDIANA PROFESSIONAL ENGINEER

/s/ Richard L. Van Cleave 09/04/12
DESIGN STANDARDS ENGINEER DATE

/s/ Mark A. Miller 09/04/12
CHIEF ENGINEER DATE

NOTES:

1. See Standard Drawing E 706-MSRW-10 for reinforcing-bar diagrams and General Notes ⬡.

(2) See Standard Drawing E 706-BRSF-01 for concrete railing type FC details.

(3) Construction joint type A. See Standard Drawing E 702-CJTA-01 for details.

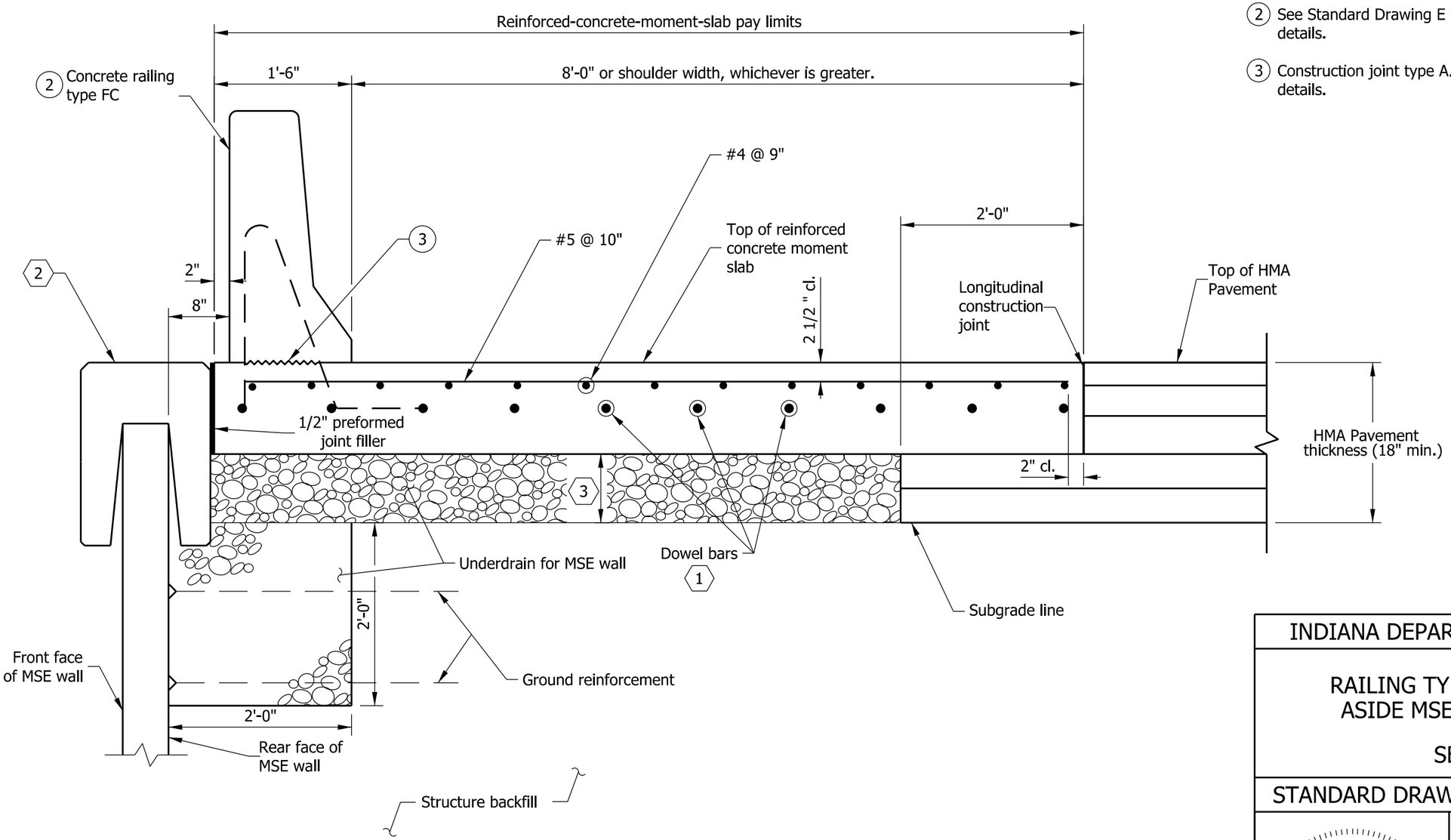

INDIANA DEPARTMENT OF TRANSPORTATION

RAILING TYPE FC AND MOMENT SLAB
ASIDE MSE WALL - HMA PAVEMENT

SEPTEMBER 2012

STANDARD DRAWING NO. E 706-MSRW-03

RICHARD L. VanCLEAVE
REGISTERED
No. 9750
STATE OF INDIANA
PROFESSIONAL ENGINEER

/s/ Richard L. Van Cleave 09/04/12
DESIGN STANDARDS ENGINEER DATE

/s/ Mark A. Miller 09/04/12
CHIEF ENGINEER DATE

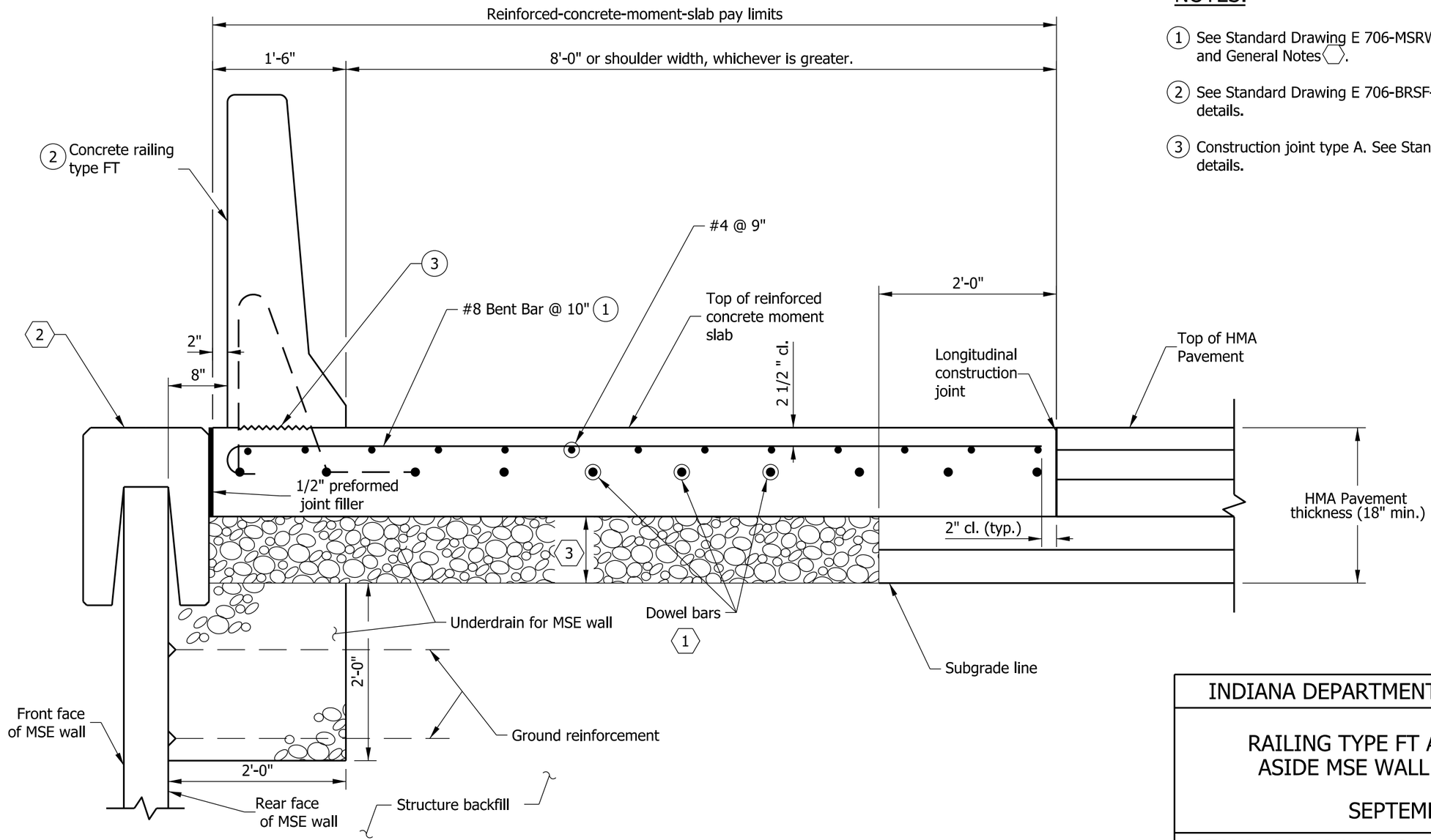

NOTES:

1. See Standard Drawing E 706-MSRW-10 for reinforcing-bar diagrams and General Notes ⬡.
2. See Standard Drawing E 706-BRSF-02 for concrete railing type FT details.
3. Construction joint type A. See Standard Drawing E 702-CJTA-01 for details.

INDIANA DEPARTMENT OF TRANSPORTATION

RAILING TYPE FT AND MOMENT SLAB ASIDE MSE WALL - HMA PAVEMENT

SEPTEMBER 2012

STANDARD DRAWING NO. E 706-MSRW-04

RICHARD L. VanCLEAVE REGISTERED No. 9750 STATE OF INDIANA PROFESSIONAL ENGINEER

/s/ Richard L. Van Cleave 09/04/12
DESIGN STANDARDS ENGINEER DATE

/s/ Mark A. Miller 09/04/12
CHIEF ENGINEER DATE

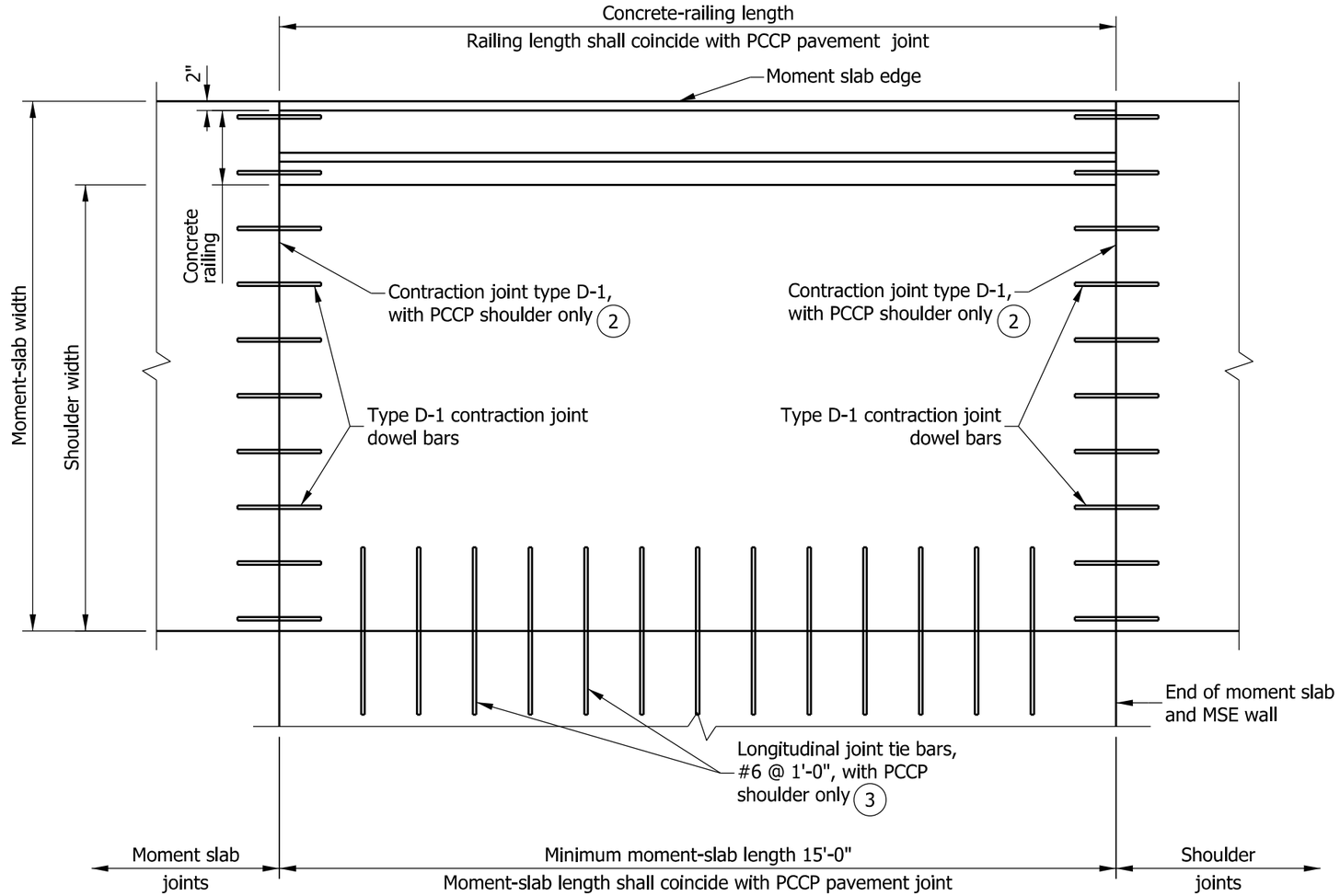

PLAN - REINFORCED CONCRETE MOMENT SLAB JOINTS

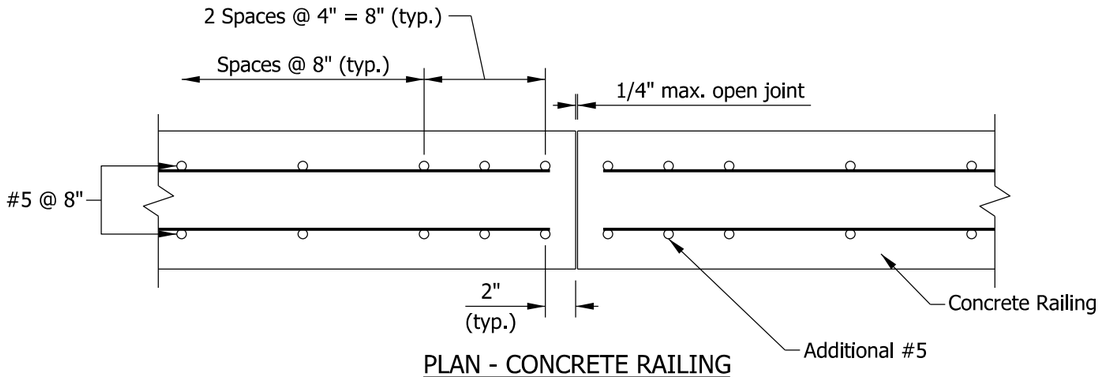

PLAN - CONCRETE RAILING
ADDITIONAL VERTICAL STEEL

NOTES:

1. Where used with HMA mainline pavement, concrete railing and moment-slab lengths shall coincide and be spaced at 18 ft. 0 in.

(2) See Standard Drawing series E 503-CCPJ for contraction joint type D-1 details.

(3) See Standard Drawing series E 503-CCPJ for joint tie-bar details.

INDIANA DEPARTMENT OF TRANSPORTATION

MOMENT SLAB AND RAILING JOINTS

SEPTEMBER 2012

STANDARD DRAWING NO. E 706-MSRW-09

RICHARD L. VanCLEAVE REGISTERED No. 9750 STATE OF INDIANA PROFESSIONAL ENGINEER

/s/ Richard L. Van Cleave 09/04/12
DESIGN STANDARDS ENGINEER DATE

/s/ Mark A. Miller 09/04/12
CHIEF ENGINEER DATE

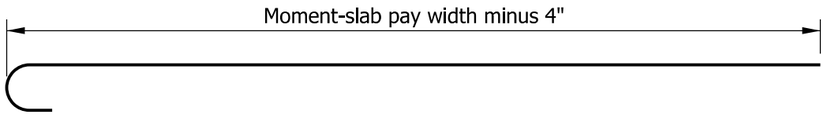

#8 BENT BAR
WITH STANDARD 180° HOOK

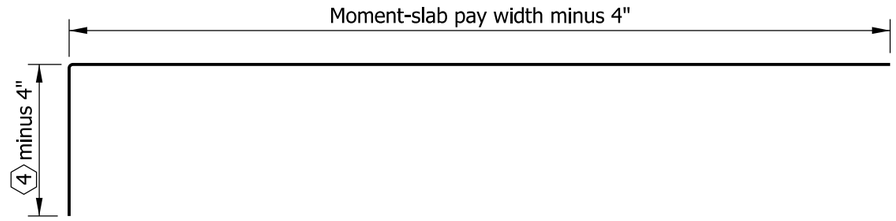

#5 BENT BAR OR #8 BENT BAR
WITH STANDARD 90° BEND

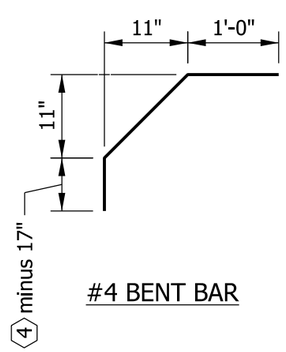

#4 BENT BAR

GENERAL NOTES:

1. See Standard Drawing E 706-MSRW-09 for plan view and additional reinforcing bars in the railing at the railing joints.
2. See Standard Drawing E 731-MSEW-01 for coping details.
3. The thickness of the coarse aggregate No. 8 shall be equal to the combined thickness of the first two lifts of the HMA, but not less than 6 in.
4. •For moment slab thickness ≤ 15 in., this shall be 2 ft. 0 in.
   •For moment slab thickness > 15 in., this shall be moment-slab thickness plus 12 in.
5. The moment slab shall be used only within the limits of the MSE wall.
6. Reinforcing bars in the moment slab shall be epoxy coated.
7. See Standard Drawing E 703-BRST-01 for reinforcing-bar bending diagrams and notes.

INDIANA DEPARTMENT OF TRANSPORTATION

RAILING AND MOMENT SLAB
AT MSE WALL

SEPTEMBER 2012

STANDARD DRAWING NO. E 706-MSRW-10

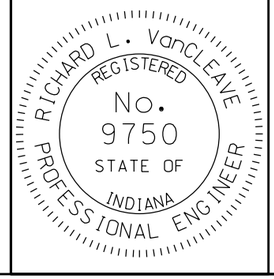

/s/ Richard L. Van Cleave *09/04/12*
DESIGN STANDARDS ENGINEER DATE

/s/ Mark A. Miller *09/04/12*
CHIEF ENGINEER DATE

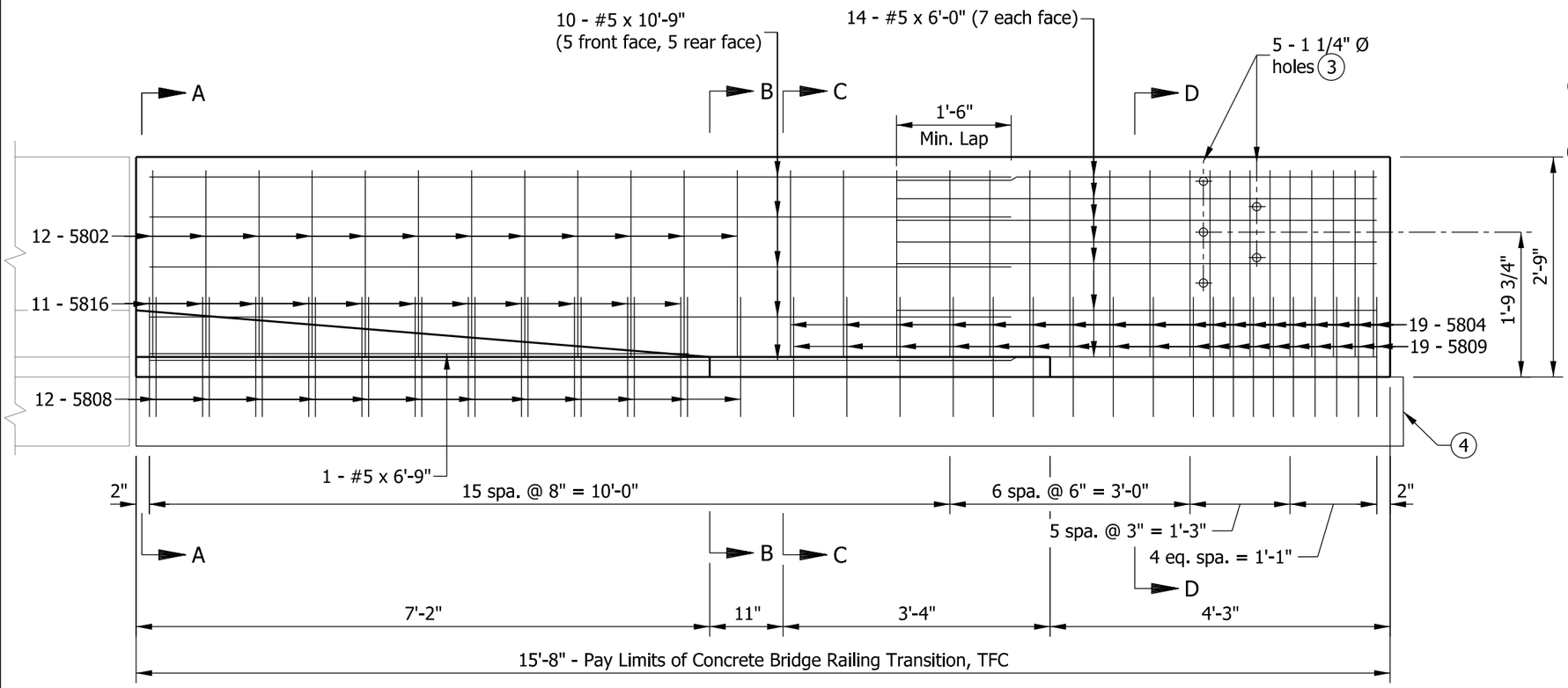

ELEVATION

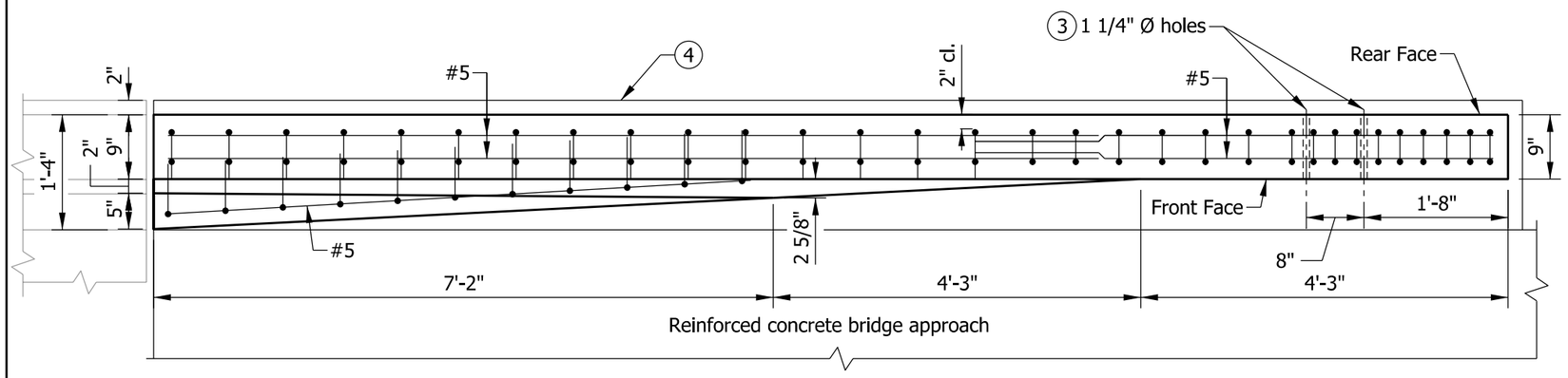

PLAN

NOTES

1. See Standard Drawing E 706-TTFC-02 for sections.
2. See Standard Drawing E 706-TTFC-03 for reinforcing-bar diagrams and bill of materials.

(3) Holes for attachment of guardrail transition, MGS transition, or type TGB. See Standard Drawing E 706-CBRT-04 for details.

(4) RCBA extension for bridge railing transition type TFC. See Standard Drawing E 609-TBAE-01 for details.

INDIANA DEPARTMENT OF TRANSPORTATION

CONCRETE BRIDGE RAILING TRANSITION TFC PLAN AND ELEVATION

SEPTEMBER 2013

STANDARD DRAWING NO. E 706-TTFC-01

ELIZABETH W. PHILLIPS
REGISTERED
No. 10200124
STATE OF INDIANA
PROFESSIONAL ENGINEER

/s/ Elizabeth W. Phillips 02/04/13
DESIGN STANDARDS ENGINEER DATE

/s/ Mark A. Miller 03/27/13
CHIEF ENGINEER DATE

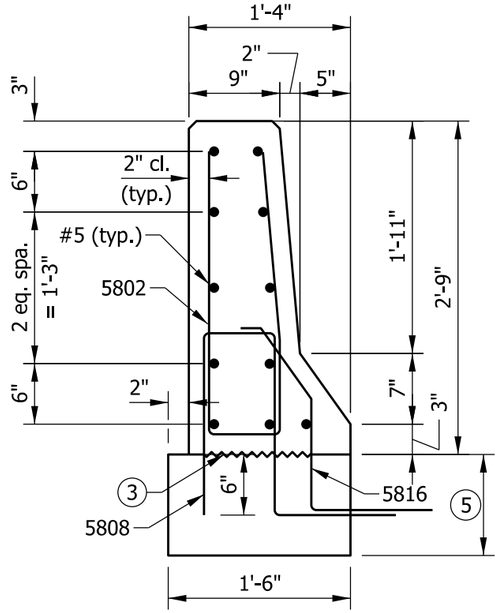

SECTION A-A

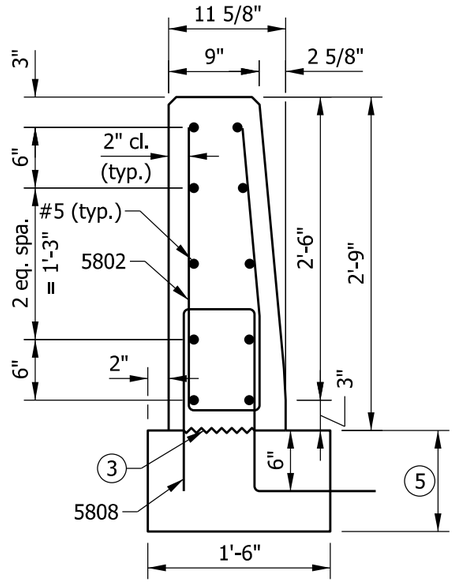

SECTION B-B

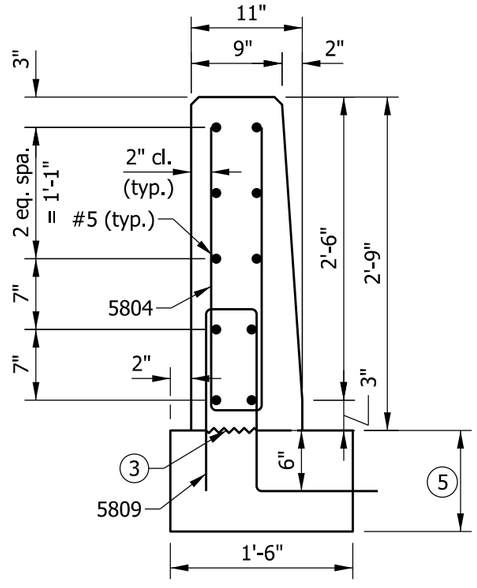

SECTION C-C

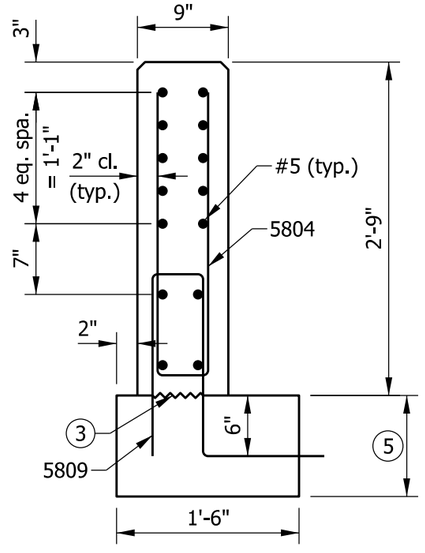

SECTION D-D

NOTES

1. See Standard Drawing E 706-TTFC-01 for elevation and plan.
2. All chamfered edges shall be 3/4".

(3) Construction joint type A. See Standard Drawing E 702-CJTA-01 for details.

4. See Standard Drawing E 706-TTFC-03 for reinforcing-bar diagrams.

(5) RCBA extension for bridge railing type TFC. See Standard Drawing E 609-TBAE-01 for details.

INDIANA DEPARTMENT OF TRANSPORTATION

CONCRETE BRIDGE RAILING
TRANSITION, TFC
SECTIONS

SEPTEMBER 2013

STANDARD DRAWING NO. E 706-TTFC-02

ELIZABETH W. PHILLIPS
REGISTERED
No.
10200124
STATE OF
INDIANA
PROFESSIONAL ENGINEER

/s/ Elizabeth W. Phillips 02/04/13
DESIGN STANDARDS ENGINEER DATE

/s/ Mark A. Miller 03/27/13
CHIEF ENGINEER DATE

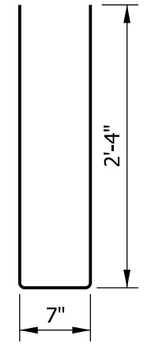

5802 x 5'-3"

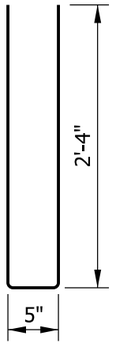

5804 x 5'-1"

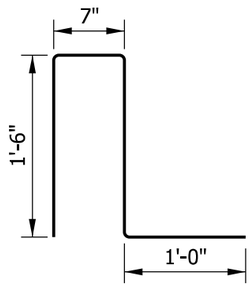

5808 x 4'-7"

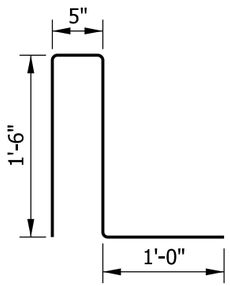

5809 x 4'-5"

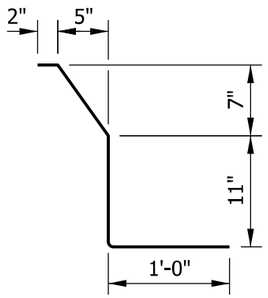

5816 x 2'-10"

NOTE

1. See Standard Drawing E 703-BRST-01 for reinforcing-bar bending details and notes.

BILL OF MATERIALS			
Quantities are for one concrete bridge railing transition type TFC			
EPOXY-COATED REINFORCING STEEL			
MARK OR SIZE	NO. OF BARS	LENGTH	WEIGHT
5802	12	5'-3"	
5804	19	5'-1"	
5808	12	4'-7"	
5809	19	4'-5"	
5816	11	2'-10"	
#5	10	10'-9"	
#5	1	6'-9"	
#5	14	6'-0"	
Total Epoxy-Coated Reinforcing Steel			551 LBS
MISCELLANEOUS			
Concrete, Class C			1.2 CYS
Surface Seal			100 SFT

INDIANA DEPARTMENT OF TRANSPORTATION

CONCRETE BRIDGE RAILING TRANSITION, TFC

SEPTEMBER 2013

STANDARD DRAWING NO. E 706-TTFC-03

ELIZABETH W. PHILLIPS
REGISTERED
No. 10200124
STATE OF INDIANA
PROFESSIONAL ENGINEER

/s/ Elizabeth W. Phillips 02/04/13
DESIGN STANDARDS ENGINEER DATE

/s/ Mark A. Miller 03/27/13
CHIEF ENGINEER DATE

NOTES

1. See Standard Drawing E 706-TTFT-02 for sections.
2. See Standard Drawing E 706-TTFT-03 for reinforcing-bar diagrams and bill of materials.

(3) Holes for attachment of guardrail transition, MGS transition, or type TGB. See Standard Drawing E 706-CBRT-04 for details.

(4) RCBA extension for bridge railing transition type TFT. See Standard Drawing E 609-TBAE-02 for details.

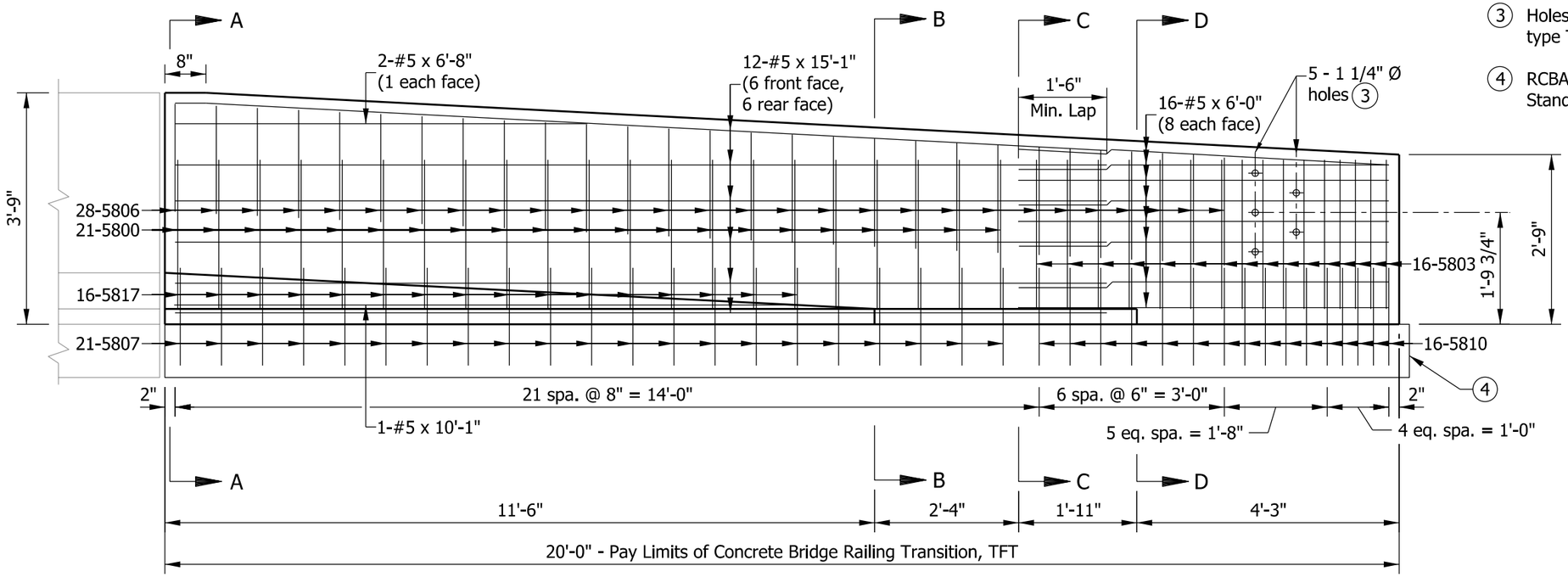

ELEVATION

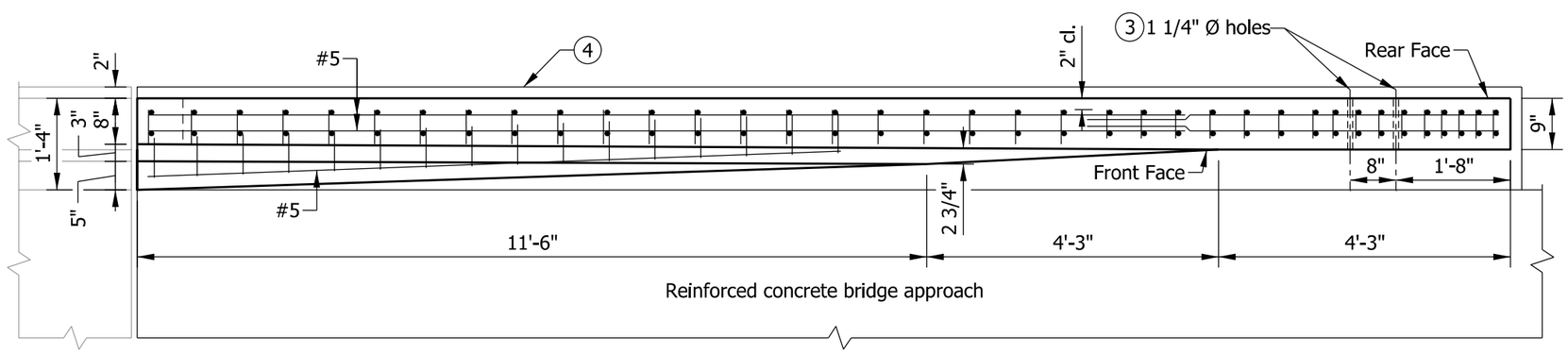

PLAN

INDIANA DEPARTMENT OF TRANSPORTATION

CONCRETE BRIDGE RAILING
TRANSITION TFT
PLAN AND ELEVATION
SEPTEMBER 2012

STANDARD DRAWING NO. E 706-TTFT-01

RICHARD L. VanCLEAVE
REGISTERED
No. 9750
STATE OF INDIANA
PROFESSIONAL ENGINEER

/s/ Richard L. Van Cleave 09/04/12
SUPERVISOR, ROADWAY STANDARDS DATE

/s/ Mark A. Miller 09/04/12
CHIEF ENGINEER DATE

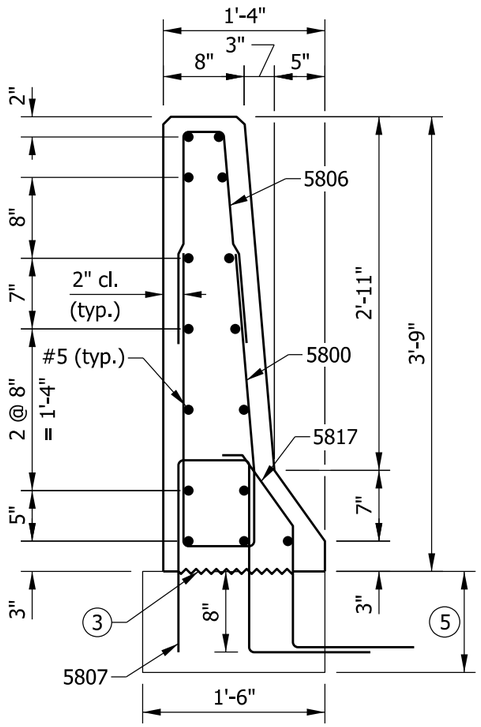

SECTION A-A

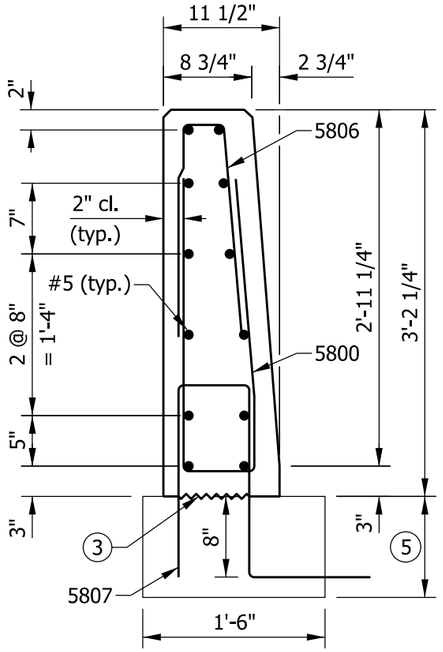

SECTION B-B

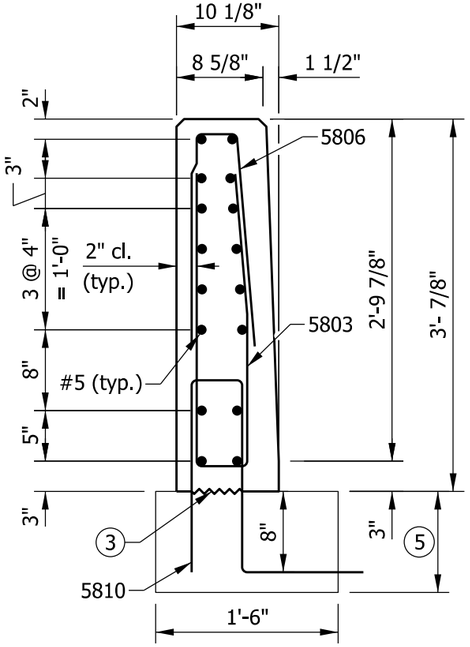

SECTION C-C

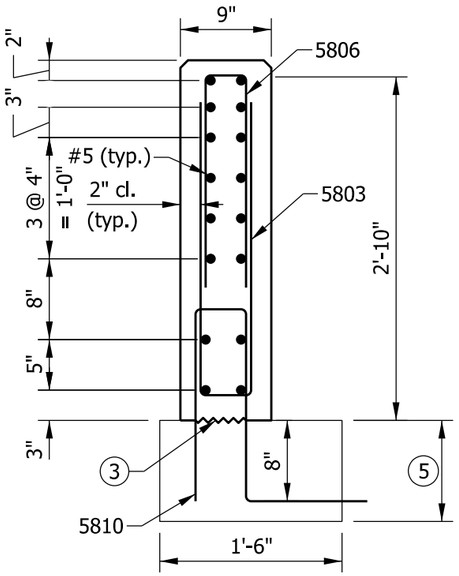

SECTION D-D

NOTES

1. See Standard Drawing E 706-TTFT-01 for elevation and plan.
2. All chamfered edges shall be 3/4".

(3) Construction joint type A. See Standard Drawing E 702-CJTA-01 for details.

4. See Standard Drawing E 706-TTFT-03 for reinforcing-bar diagrams.

(5) RCBA extension for bridge railing transition type TFT. See Standard Drawing E 609-TBAE-02 for details.

INDIANA DEPARTMENT OF TRANSPORTATION

CONCRETE BRIDGE RAILING
TRANSITION, TFT

SEPTEMBER 2012

STANDARD DRAWING NO. E 706-TTFT-02

RICHARD L. VanCLEAVE
REGISTERED
No. 9750
STATE OF INDIANA
PROFESSIONAL ENGINEER

/s/ Richard L. Van Cleave 09/04/12
SUPERVISOR, ROADWAY STANDARDS DATE

/s/ Mark A. Miller 09/04/12
CHIEF ENGINEER DATE

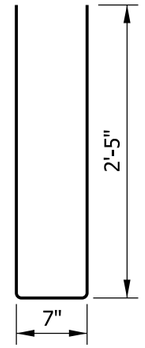

5800 x 5'-5"

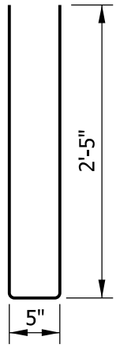

5803 x 5'-3"

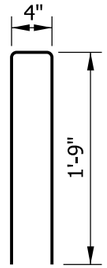

5806 x 3'-10"

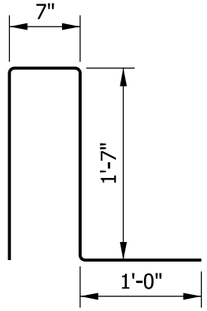

5807 x 4'-9"

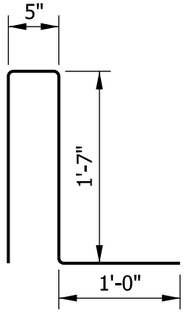

5810 x 4'-7"

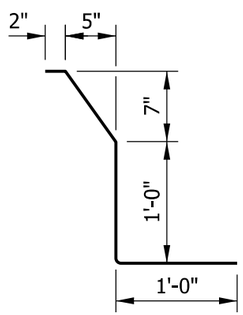

5817 x 3'-0"

NOTE

1. See Standard Drawing E 703-BRST-01 for reinforcing-bar bending details and notes.

BILL OF MATERIALS			
Quantities are for one concrete bridge railing transition type TFT			
EPOXY-COATED REINFORCING STEEL			
MARK OR SIZE	NO. OF BARS	LENGTH	WEIGHT
5800	21	5'-5"	
5803	16	5'-3"	
5806	28	3'-10"	
5807	21	4'-9"	
5810	16	4'-7"	
5817	16	3'-0"	
#5	12	15'-1"	
#5	1	10'-1"	
#5	2	6'-8"	
#5	16	6'-0"	
Total Epoxy-Coated Reinforcing Steel			862 LBS
MISCELLANEOUS			
Concrete, Class C			2.0 CYS
Surface Seal			13.4 SYS

INDIANA DEPARTMENT OF TRANSPORTATION

CONCRETE BRIDGE RAILING TRANSITION TYPE TFT

SEPTEMBER 2012

STANDARD DRAWING NO. E 706-TTFT-03

RICHARD L. VanCLEAVE REGISTERED No. 9750 STATE OF INDIANA PROFESSIONAL ENGINEER

/s/ Richard L. Van Cleave 09/04/12
SUPERVISOR, ROADWAY STANDARDS DATE

/s/ Mark A. Miller 09/04/12
CHIEF ENGINEER DATE

INDEX	
SHEET NO.	SUBJECT
1	Concrete Bridge Railing Transition Index and General Notes
2	Concrete Bridge Railing Transition, TPF-1 Plan and Elevation
3	Concrete Bridge Railing Transition, TPF-1 Sections and Reinforcing Bar Bending Details
4	Concrete Bridge Railing Transition, TPS-1 Plan and Elevation
5	Concrete Bridge Railing Transition, TPS-1 Sections and Reinforcing Bar Bending Details

GENERAL NOTES:

1. All reinforcing bars designated E shall be epoxy coated.

INDIANA DEPARTMENT OF TRANSPORTATION

CONCRETE BRIDGE RAILING TRANSITION
INDEX AND GENERAL NOTES

SEPTEMBER 2019

STANDARD DRAWING NO. E 706-TTPP-01

ELIZABETH W. PHILLIPS
REGISTERED
No. 10200124
STATE OF INDIANA
PROFESSIONAL ENGINEER

5/2/2019
DESIGN STANDARDS ENGINEER DATE

6/5/2019
CHIEF ENGINEER DATE

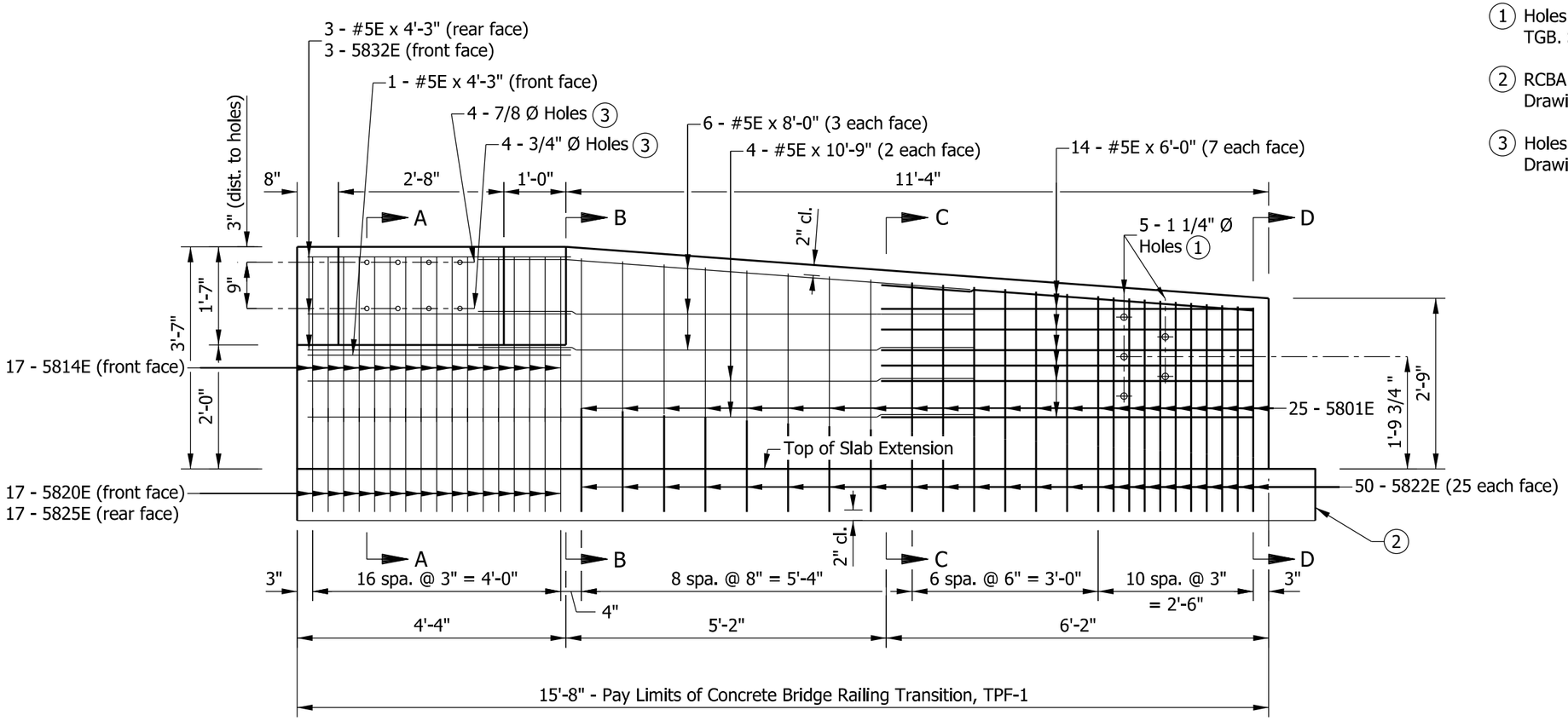

ELEVATION

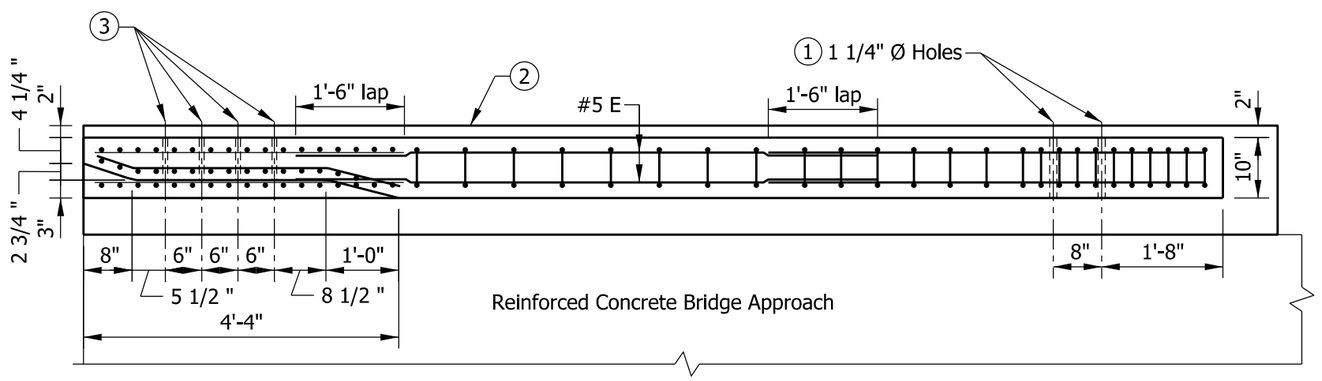

PLAN

NOTES:

(1) Holes for attachment of guardrail transition, MGS transition, or type TGB. See Standard Drawing E 706-CBRT-04 for details.

(2) RCBA extension for bridge railing transition type TPF-1. See Standard Drawing E 609-TBAE-01 for details.

(3) Holes for attachment of steel bridge railing type PF-1. See Standard Drawing E 706-BRPP-02 for details.

BILL OF MATERIALS			
Quantities are for one concrete bridge railing transition type TPF-1.			
EPOXY COATED REINFORCING BARS			
MARK OR SIZE	NO. OF BARS	LENGTH	WEIGHT
5801E	25	5'-4"	
5814E	17	3'-0"	
5820E	17	3'-1"	
5822E	50	3'-7"	
5825E	17	4'-8"	
5832E	3	4'-3"	
#5E	4	10'-9"	
#5E	6	8'-0"	
#5E	14	6'-0"	
#5E	4	4'-3"	
Total Epoxy Coated Reinforcing Bars			730 LBS
MISCELLANEOUS			
Concrete, Class C			1.5 CYS
Surface Seal			119 SFT

INDIANA DEPARTMENT OF TRANSPORTATION

CONCRETE BRIDGE RAILING TRANSITION, TPF-1 PLAN AND ELEVATION

SEPTEMBER 2019

STANDARD DRAWING NO. E 706-TTPP-02

ELIZABETH W. PHILLIPS
REGISTERED
No. 10200124
STATE OF INDIANA
PROFESSIONAL ENGINEER

5/2/2019
DESIGN STANDARDS ENGINEER — DATE

6/5/2019
CHIEF ENGINEER — DATE

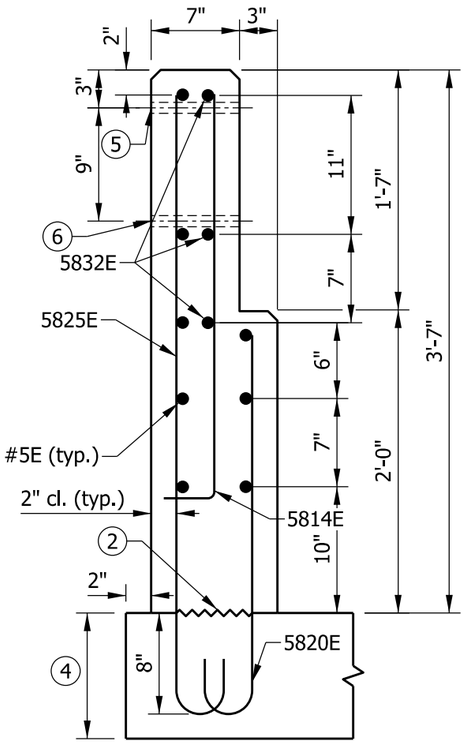

SECTION A-A

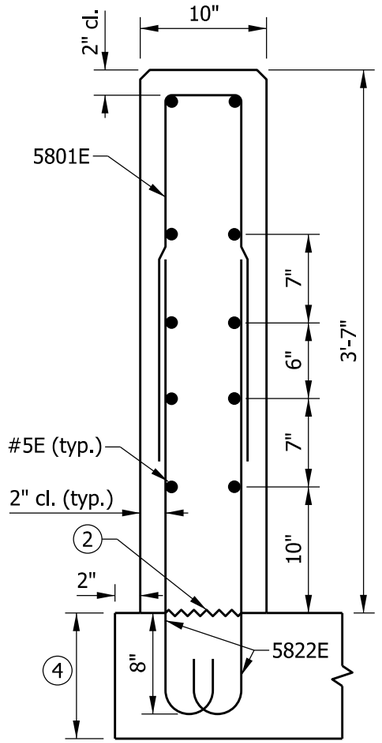

SECTION B-B

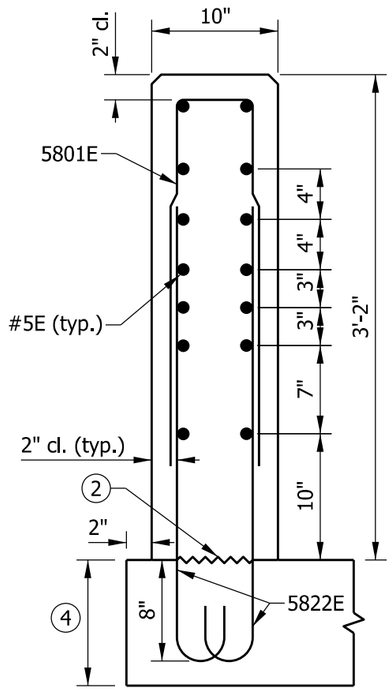

SECTION C-C

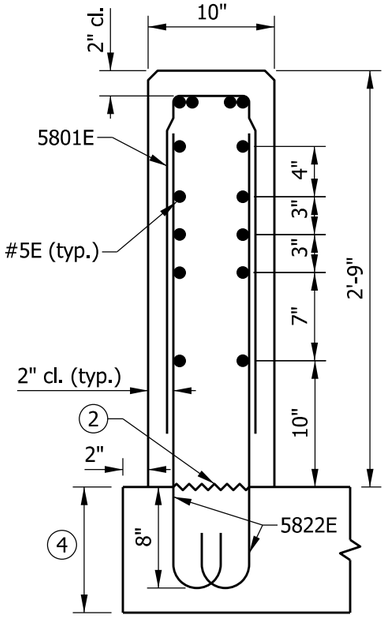

SECTION D-D

NOTES:

1. All chamfered edges shall be 3/4 in.
2. Construction joint type A. See Standard Drawing E 702-CJTA-01 for details.
3. See Standard Drawing E 703-BRST-01 for reinforcing-bar bending details and notes.
4. RCBA extension for bridge railing transition type TPF-1. See Standard Drawing E 609-TBAE-01 details.
5. 7/8 in. diameter hole for attachment of steel bridge railing type PF-1, large rail. See Standard Drawing E 706-BRPP-02 for details.
6. 3/4 in. diameter hole for attachment of steel bridge railing type PF-1, small rail. See Standard Drawing E 706-BRPP-02 for details.

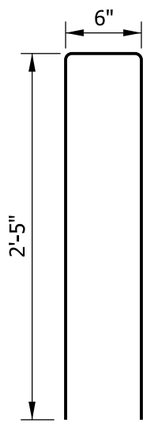

5801E x 5'-4"

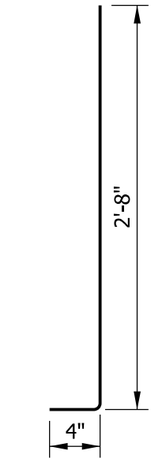

5814E x 3'-0"

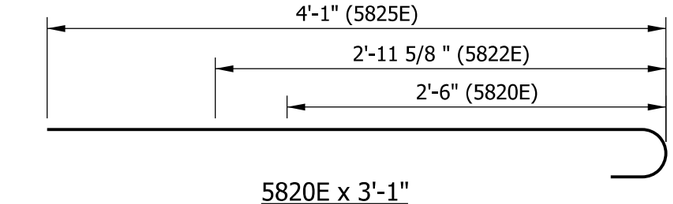

5820E x 3'-1"
5822E x 3'-7"
5825E x 4'-8"

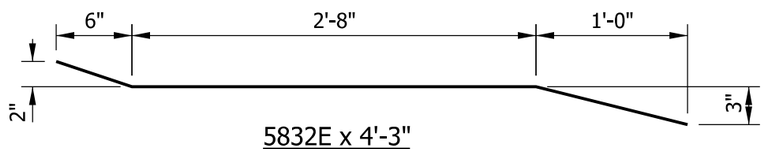

5832E x 4'-3"

INDIANA DEPARTMENT OF TRANSPORTATION

CONCRETE BRIDGE RAILING TRANSITION,
TPF-1 SECTIONS AND
REINFORCING BAR BENDING DETAILS
SEPTEMBER 2019

STANDARD DRAWING NO. E 706-TTPP-03

ELIZABETH W. PHILLIPS
REGISTERED
No. 10200124
STATE OF INDIANA
PROFESSIONAL ENGINEER

5/2/2019
DESIGN STANDARDS ENGINEER — DATE

6/5/2019
CHIEF ENGINEER — DATE

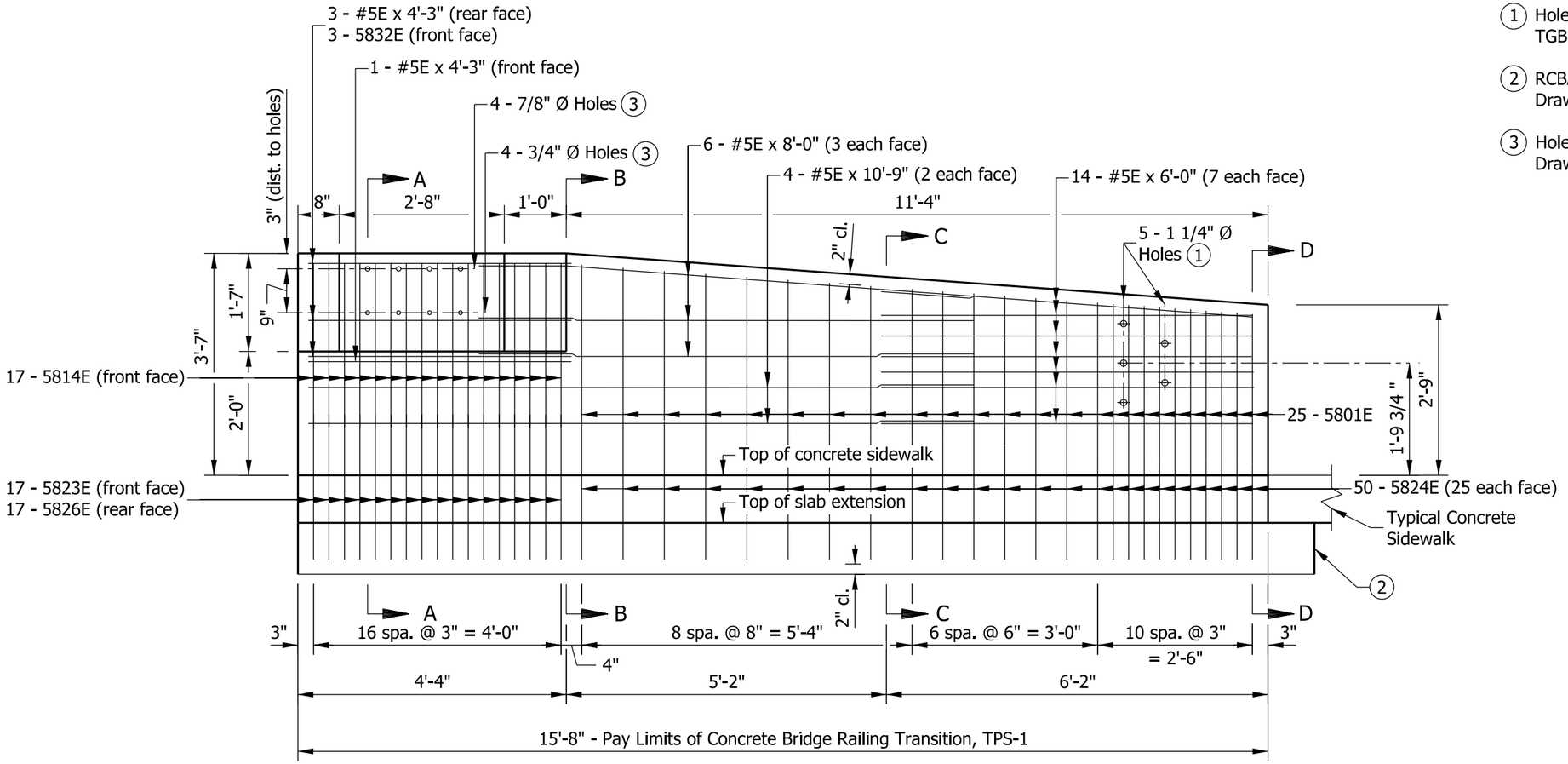

ELEVATION

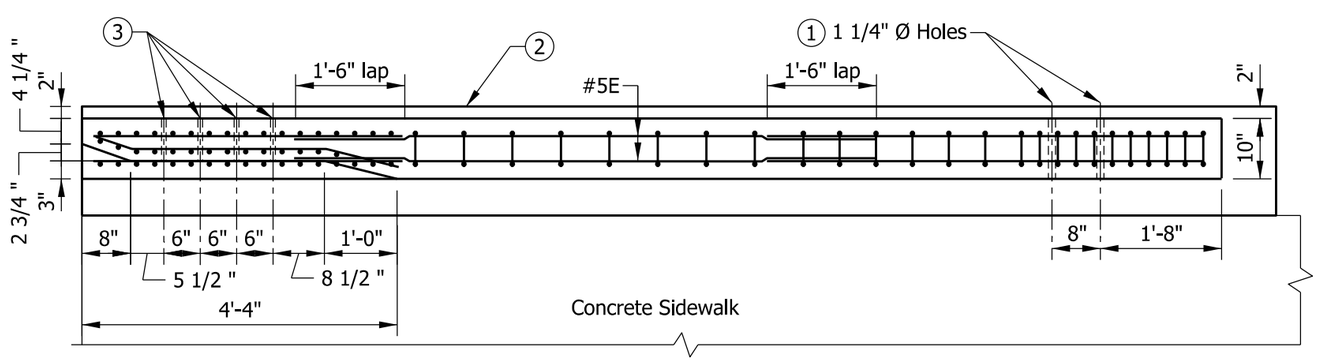

PLAN

NOTES:

(1) Holes for attachment of guardrail transition, MGS transition, or type TGB. See Standard Drawing E 706-CBRT-04 for details.

(2) RCBA extension for bridge railing transition type TPS-1. See Standard Drawing E 609-TBAE-01 for details.

(3) Holes for attachment of steel bridge railing type PS-1. See Standard Drawing E 706-BRPP-03 for details.

BILL OF MATERIALS			
Quantities are for one concrete bridge railing transition type TPS-1.			
EPOXY COATED REINFORCING BARS			
MARK OR SIZE	NO. OF BARS	LENGTH	WEIGHT
5801E	25	5'-4"	
5814E	17	3'-0"	
5823E	17	3'-9"	
5824E	50	4'-3"	
5826E	17	5'-4"	
5832E	3	4'-3"	
#5E	4	10'-9"	
#5E	6	8'-0"	
#5E	14	6'-0"	
#5E	4	4'-3"	
Total Epoxy Coated Reinforcing Bars			789 LBS
MISCELLANEOUS			
Concrete, Class C			1.9 CYS
Surface Seal			131 SFT

INDIANA DEPARTMENT OF TRANSPORTATION

CONCRETE BRIDGE RAILING TRANSITION, TPS-1 PLAN AND ELEVATION

SEPTEMBER 2019

STANDARD DRAWING NO. E 706-TTPP-04

ELIZABETH W. PHILLIPS
REGISTERED
No. 10200124
STATE OF INDIANA
PROFESSIONAL ENGINEER

5/2/2019
DESIGN STANDARDS ENGINEER DATE

6/5/2019
CHIEF ENGINEER DATE

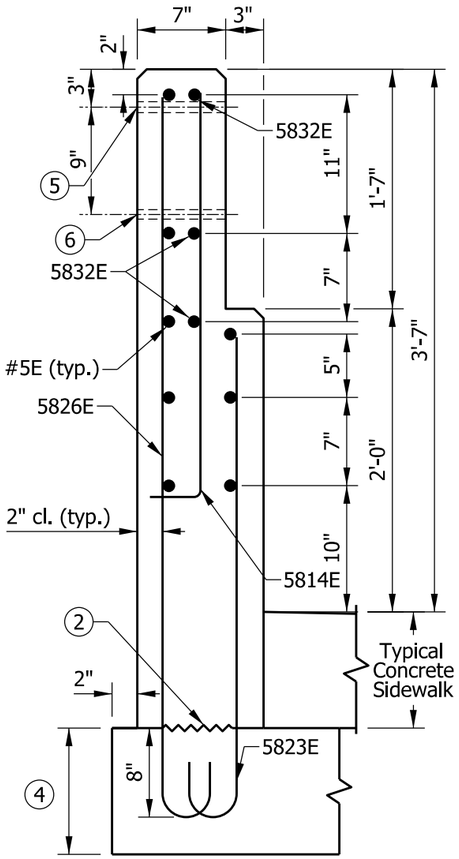

SECTION A-A

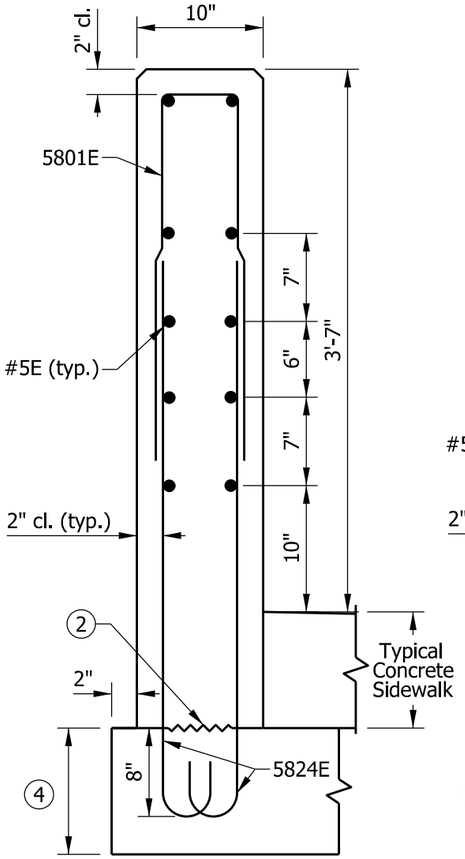

SECTION B-B

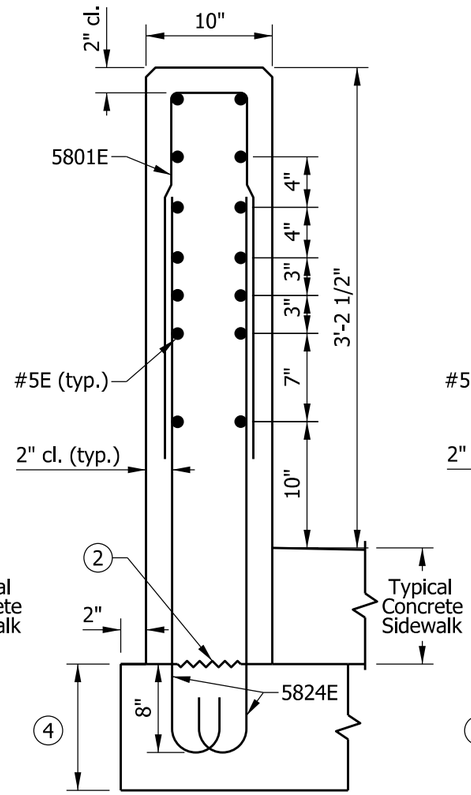

SECTION C-C

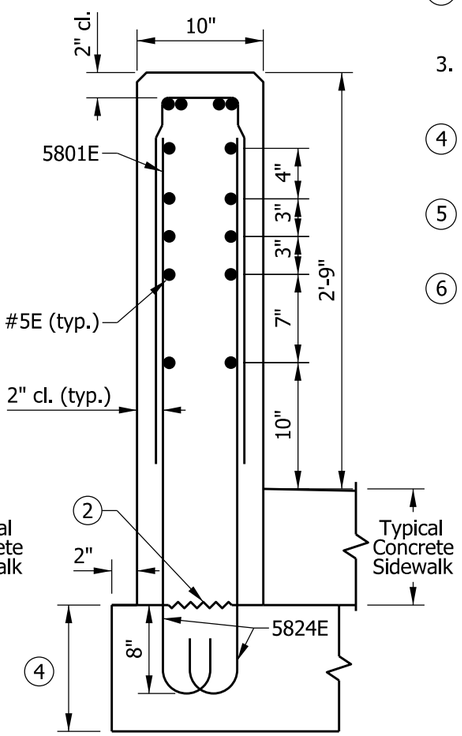

SECTION D-D

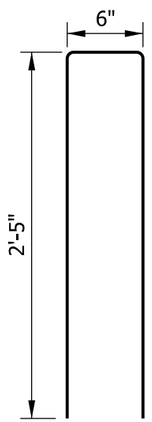

5801E x 5'-4"

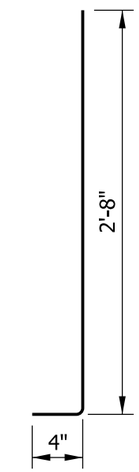

5814E x 3'-0"

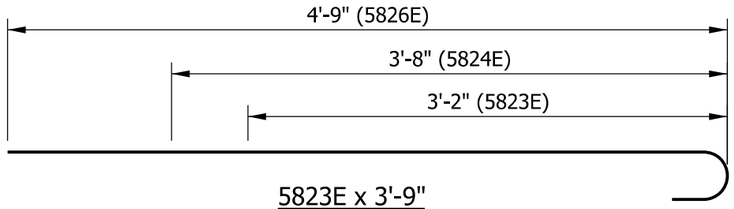

5823E x 3'-9"
5824E x 4'-3"
5826E x 5'-4"

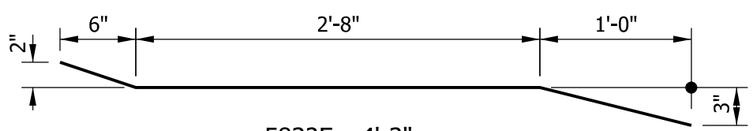

5832E x 4'-3"

NOTES:

1. All chamfered edges shall be 3/4 in.
2. Construction joint type A. See Standard Drawing E 702-CJTA-01 for details.
3. See Standard Drawing E 703-BRST-01 for reinforcing-bar bending details and notes.
4. RCBA extension for bridge railing transition type TPS-1. See Standard Drawing E 609-TBAE-01 for details.
5. 7/8 in. diameter hole for attachment of steel bridge railing type PS-1, large rail. See Standard Drawing E 706-BRPP-03 for details.
6. 3/4 in. diameter hole for attachment of steel bridge railing type PS-1, small rail. See Standard Drawing E 706-BRPP-03 for details.

INDIANA DEPARTMENT OF TRANSPORTATION

CONCRETE BRIDGE RAILING TRANSITION, TPS-1 SECTIONS AND REINFORCING BAR BENDING DETAILS

SEPTEMBER 2019

STANDARD DRAWING NO. E 706-TTPP-05

ELIZABETH W. PHILLIPS
REGISTERED
No. 10200124
STATE OF INDIANA
PROFESSIONAL ENGINEER

DESIGN STANDARDS ENGINEER — 5/2/2019 DATE

CHIEF ENGINEER — 6/5/2019 DATE

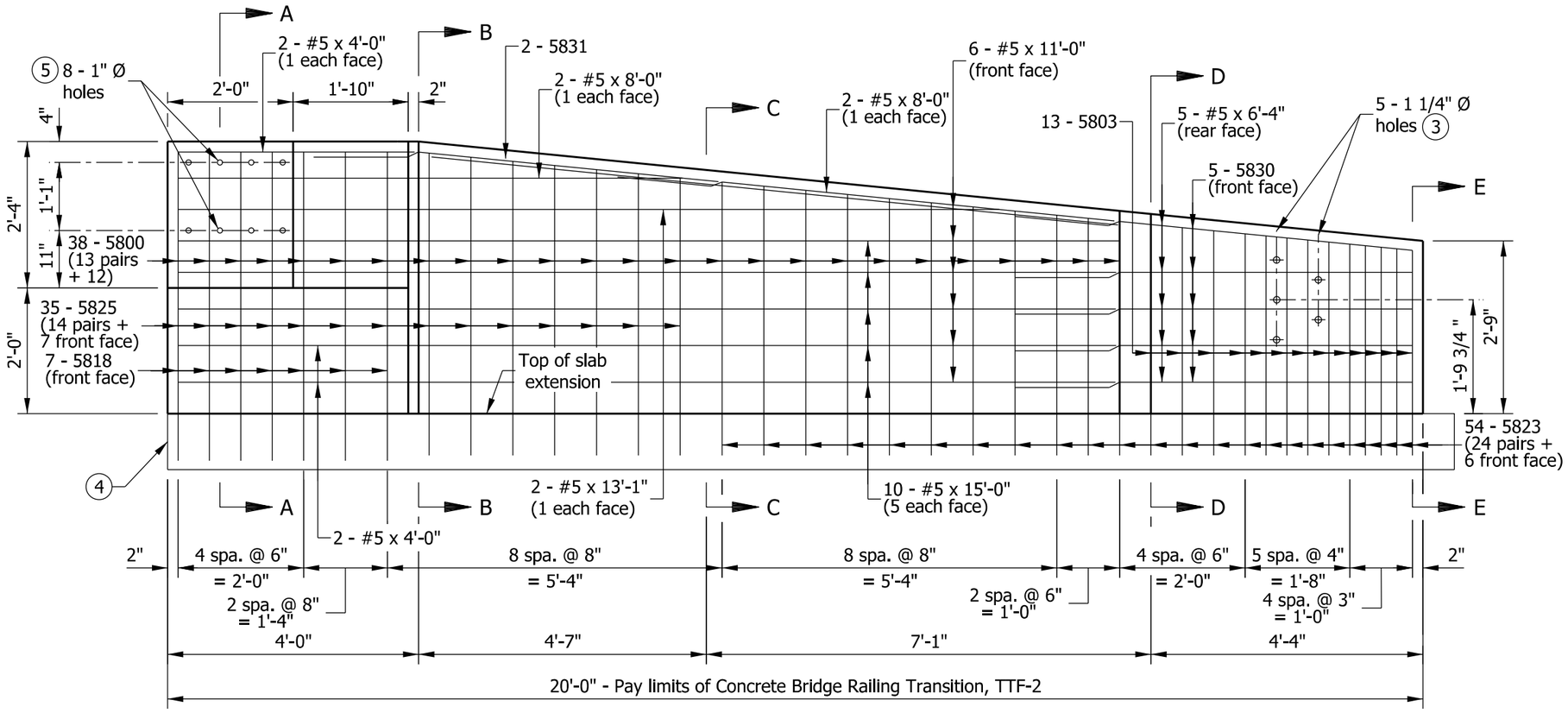

ELEVATION VIEW

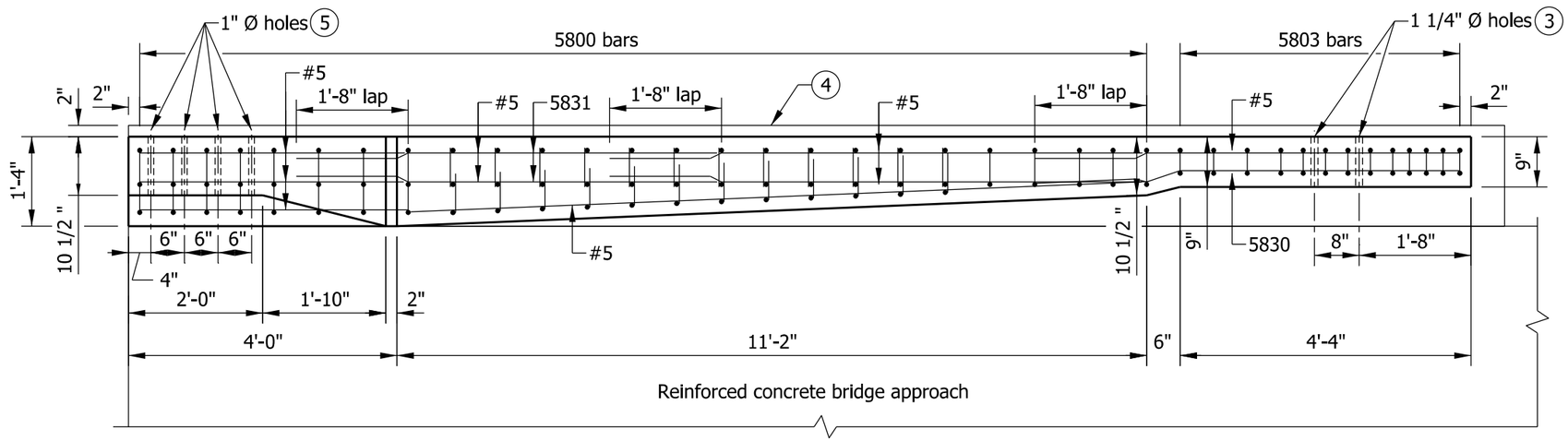

PLAN VIEW

NOTES

1. See Standard Drawings E 706-TTTF-02 and E 706-TTTF-03 for sections.
2. See Standard Drawing E 706-TTTF-04 for reinforcing-bar diagrams and bill of materials.

(3) Holes for attachment of guardrail transition, MGS transition, or type TGB. See Standard Drawing E 706-CBRT-04 for details.

(4) RCBA extension for bridge railing transition type TTF-2. See Standard Drawing E 609-TBAE-02 for details.

(5) Holes for attachment of steel bridge railing type TF-2. See Standard Drawing E 706-BRTF-01 for details.

INDIANA DEPARTMENT OF TRANSPORTATION

CONCRETE BRIDGE RAILING TRANSITION, TTF-2

SEPTEMBER 2012

STANDARD DRAWING NO. E 706-TTTF-01

RICHARD L. VanCLEAVE REGISTERED No. 9750 STATE OF INDIANA PROFESSIONAL ENGINEER

/s/ Richard L. Van Cleave 09/04/12
SUPERVISOR, ROADWAY STANDARDS DATE

/s/ Mark A. Miller 09/04/12
CHIEF ENGINEER DATE

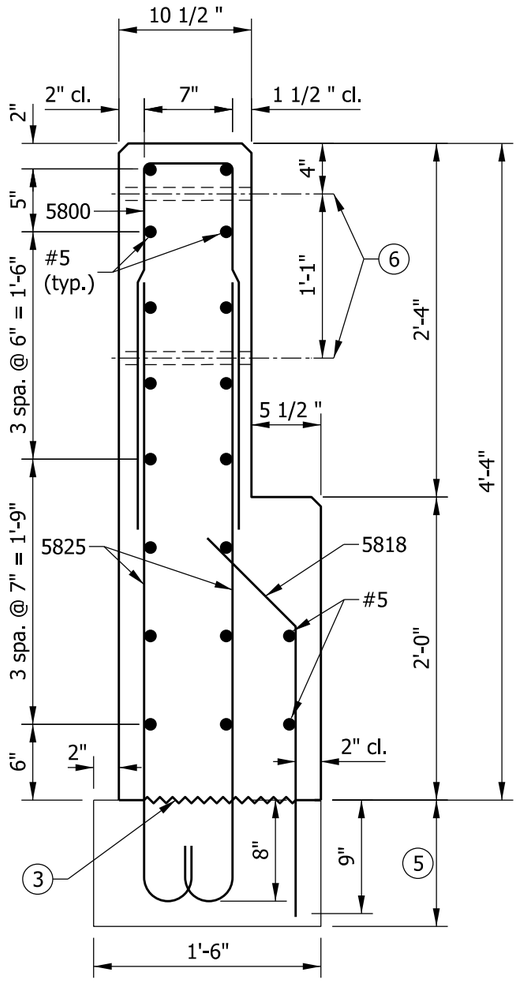

SECTION A-A

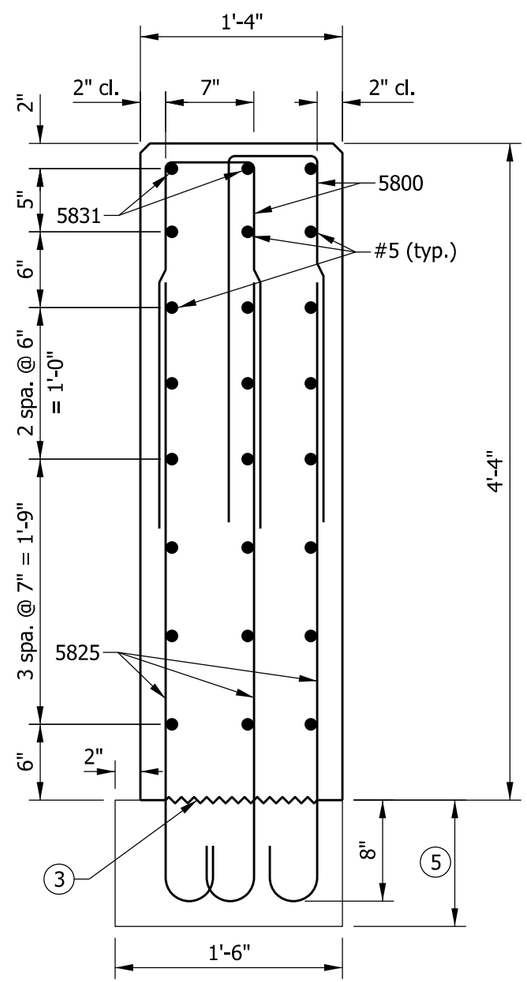

SECTION B-B

NOTES

1. See Standard Drawing E 706-TTTF-01 for elevation and plan.
2. All chamfered edges shall be 3/4".

(3) Construction joint type A. See Standard Drawing E 702-CJTA-01 for details.

4. See Standard Drawing E 706-TTTF-04 for reinforcing-bar diagrams.

(5) RCBA extension for bridge railing transition type TTF-2. See Standard Drawing E 609-TBAE-02 for details.

(6) 1" Ø hole for attachment of steel bridge railing type TF-2. See Standard Drawing E 706-BRTF-01 for details.

INDIANA DEPARTMENT OF TRANSPORTATION

CONCRETE BRIDGE RAILING TRANSITION, TTF-2

SEPTEMBER 2012

STANDARD DRAWING NO. E 706-TTTF-02

RICHARD L. VanCLEAVE REGISTERED No. 9750 STATE OF INDIANA PROFESSIONAL ENGINEER

/s/ Richard L. Van Cleave 09/04/12
SUPERVISOR, ROADWAY STANDARDS DATE

/s/ Mark A. Miller 09/04/12
CHIEF ENGINEER DATE

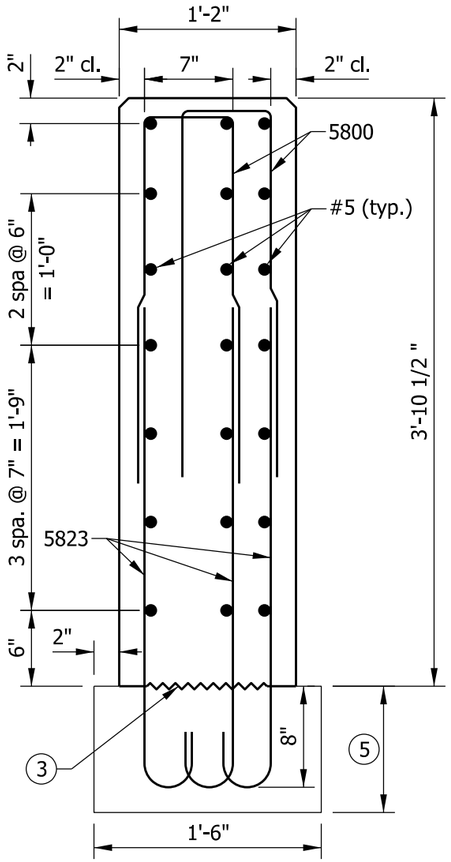

SECTION C-C

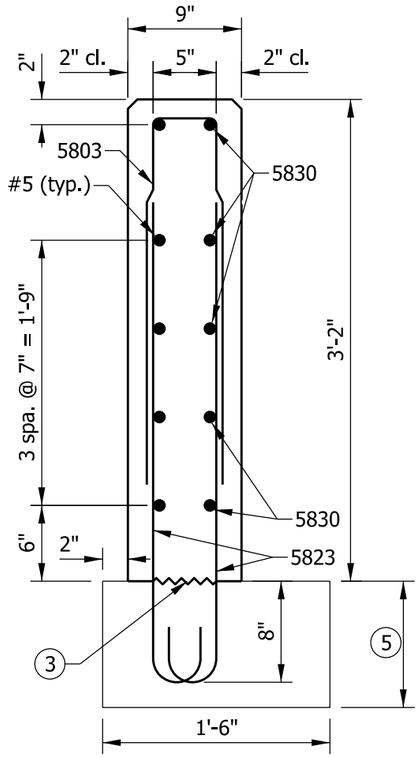

SECTION D-D

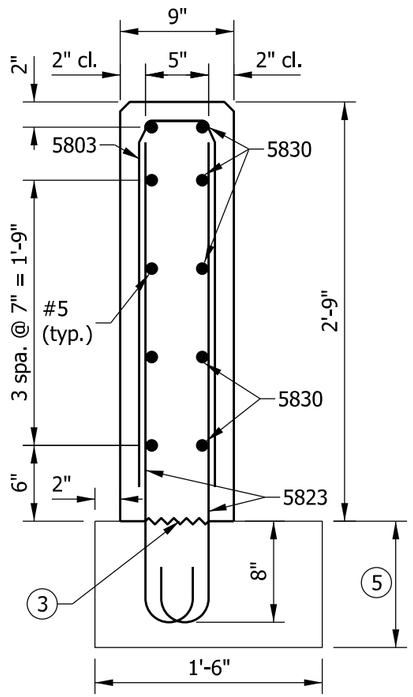

SECTION E-E

NOTES

1. See Standard Drawing E 706-TTTF-01 for elevation and plan.
2. All chamfered edges shall be 3/4".
3. Construction joint type A. See Standard Drawing E 702-CJTA-01 for details.
4. See Standard Drawing E 706-TTTF-04 for reinforcing-bar diagrams.
5. RCBA extension for bridge railing transition type TTF-2. See Standard Drawing E 609-TBAE-02 for details.

INDIANA DEPARTMENT OF TRANSPORTATION

CONCRETE BRIDGE RAILING TRANSITION, TTF-2

SEPTEMBER 2012

STANDARD DRAWING NO. E 706-TTTF-03

RICHARD L. VanCLEAVE REGISTERED No. 9750 STATE OF INDIANA PROFESSIONAL ENGINEER

/s/ Richard L. Van Cleave 09/04/12
SUPERVISOR, ROADWAY STANDARDS DATE

/s/ Mark A. Miller 09/04/12
CHIEF ENGINEER DATE

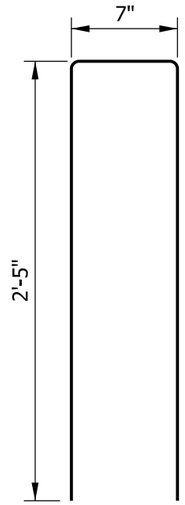

5800 x 5'-5"

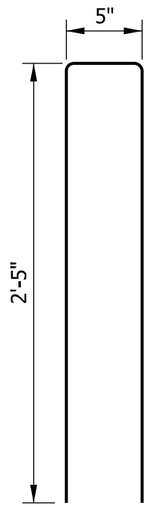

5803 x 5'-3"

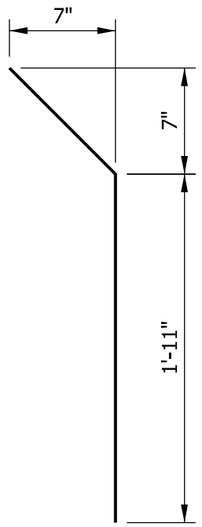

5818 x 2'-9"

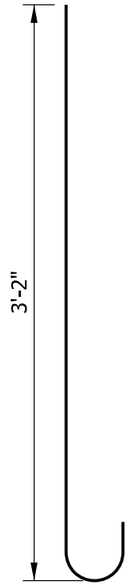

5823 x 3'-9"

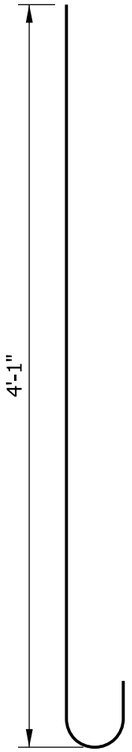

5825 x 4'-8"

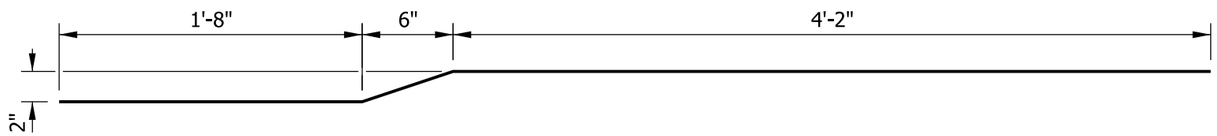

5830 x 6'-4"

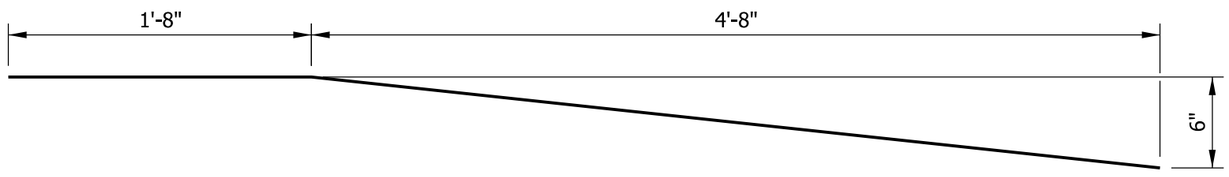

5831 x 6'-4"

NOTE

1. See Standard Drawing E 703-BRST-01 for reinforcing-bar bending details and notes.

BILL OF MATERIALS			
Quantities are for one concrete bridge railing transition type TTF-2			
EPOXY-COATED REINFORCING STEEL			
MARK OR SIZE	NO. OF BARS	LENGTH	WEIGHT
5800	38	5'-5"	
5803	13	5'-3"	
5818	7	2'-9"	
5823	54	3'-9"	
5825	35	4'-8"	
5830	5	6'-4"	
5831	2	6'-4"	
#5	10	15'-0"	
#5	2	13'-1"	
#5	6	11'-0"	
#5	4	8'-0"	
#5	5	6'-4"	
#5	4	4'-0"	
Total Epoxy-Coated Reinforcing Steel			1072 LBS
MISCELLANEOUS			
Concrete, Class C			2.9 CYS
Surface Seal			182 SFT

INDIANA DEPARTMENT OF TRANSPORTATION

CONCRETE BRIDGE RAILING TRANSITION, TTF-2

SEPTEMBER 2012

STANDARD DRAWING NO. E 706-TTTF-04

RICHARD L. VanCLEAVE REGISTERED No. 9750 STATE OF INDIANA PROFESSIONAL ENGINEER

/s/ Richard L. Van Cleave 09/04/12
SUPERVISOR, ROADWAY STANDARDS DATE

/s/ Mark A. Miller 09/04/12
CHIEF ENGINEER DATE

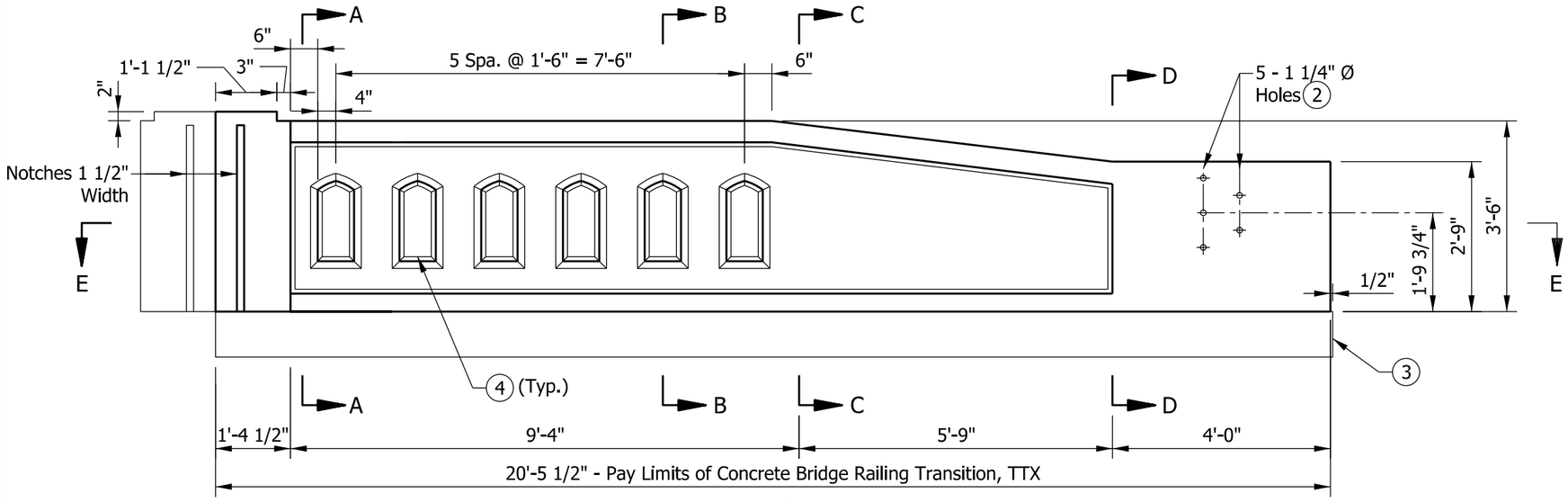

END BENT
PILASTER (Typ.)

ELEVATION

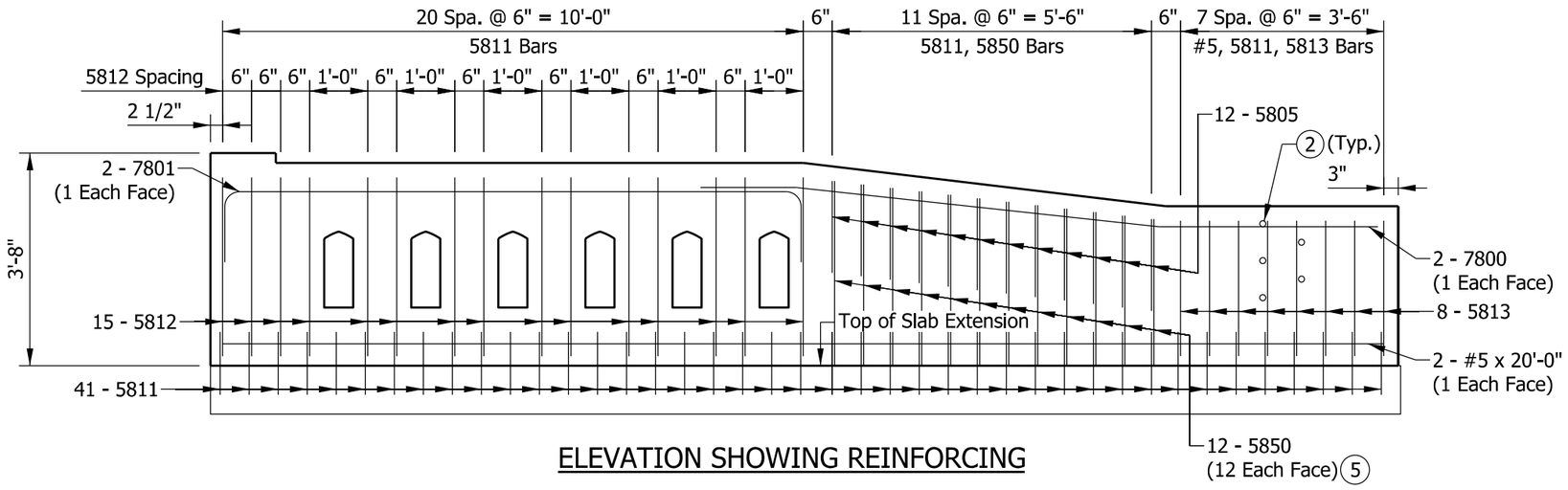

ELEVATION SHOWING REINFORCING

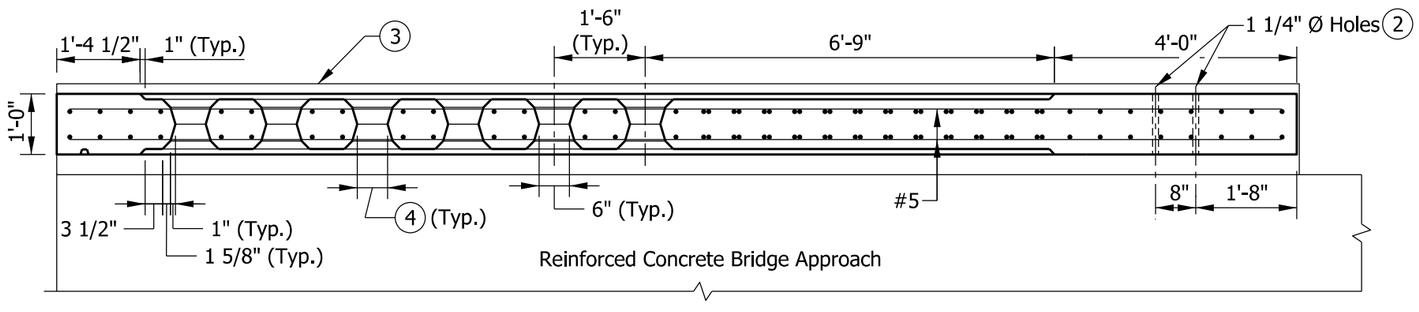

SECTION E-E

NOTES:

1. See Standard Drawing E 706-TTTX-02 for sections and reinforcing-bar diagrams.
2. Holes for attachment of guardrail transition, MGS transition, or type TGB. See Standard Drawing E 706-CBRT-04 for details.
3. RCBA extension for bridge railing transition type TTX. See Standard Drawing E 609-TBAE-02 for details.
4. Window opening. See Standard Drawing E 706-BRTX-02 for details.
5. See Standard Drawing E 706-TTTX-02 for reinforcing-bar cutting diagram.

BILL OF MATERIALS			
Quantities are for one concrete bridge railing transition type TTX			
EPOXY-COATED REINFORCING BARS			
MARK OR SIZE	NO. OF BARS	LENGTH	WEIGHT
7800	2	11'-9"	
7801	2	12'-4"	
Total #7			98 LBS
5805	12	3'-8"	
5811	41	4'-0"	
5812	15	8'-6"	
5813	8	7'-0"	
5850	12	5'-8"	
#5	2	20'-0"	
Total #5			521 LBS
Total Epoxy-Coated Reinforcing Bars			619 LBS
MISCELLANEOUS			
Concrete, Class C			2.0 CYS
Surface Seal			149 SFT

INDIANA DEPARTMENT OF TRANSPORTATION

CONCRETE BRIDGE RAILING TRANSITION, TTX

SEPTEMBER 2014

STANDARD DRAWING NO. E 706-TTTX-01

ELIZABETH W. PHILLIPS
REGISTERED
No. 10200124
STATE OF INDIANA
PROFESSIONAL ENGINEER

/s/ Elizabeth W. Phillips 09/23/13
DESIGN STANDARDS ENGINEER DATE

/s/ Mark A. Miller 09/26/13
CHIEF ENGINEER DATE

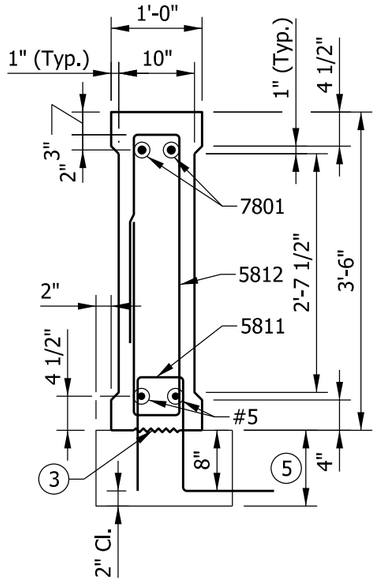

SECTION A-A

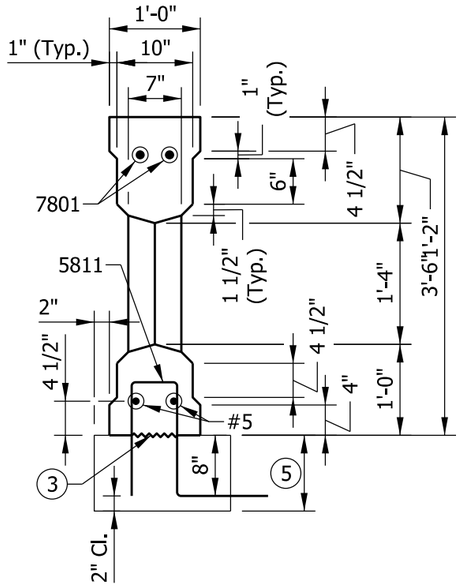

SECTION B-B

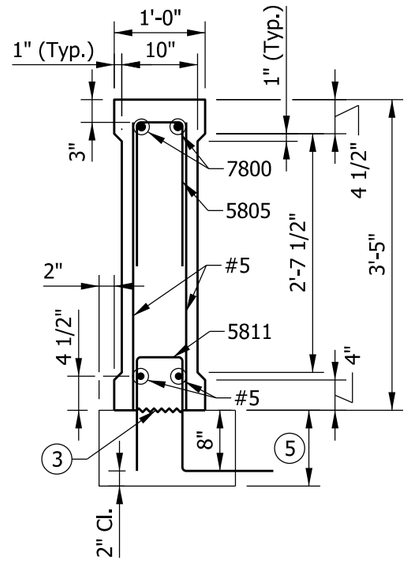

SECTION C-C

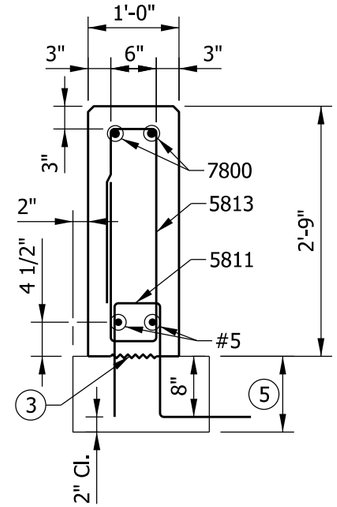

SECTION D-D

NOTES:

1. See Standard Drawing E 706-TTTX-01 for elevations and plan.
2. All chamfered edges shall be 3/4".
3. Construction joint type A. See Standard Drawing E 702-CJTA-01 for details.
4. See Standard Drawing E 703-BRST-01 for reinforcing-bar bending details and notes.
5. RCBA extension for bridge railing transition type TTX. See Standard Drawing E 609-TBAE-02 for details.

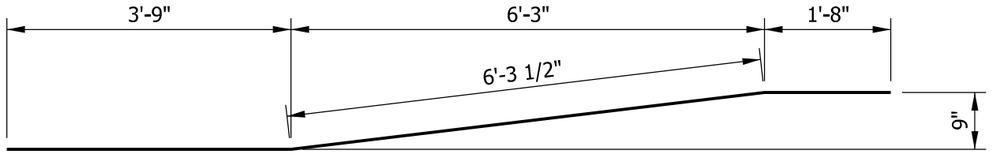

7800 x 11'-9"

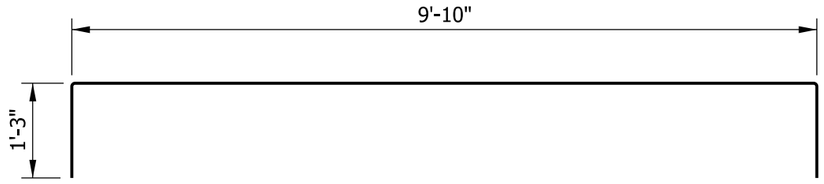

7801 x 12'-4"

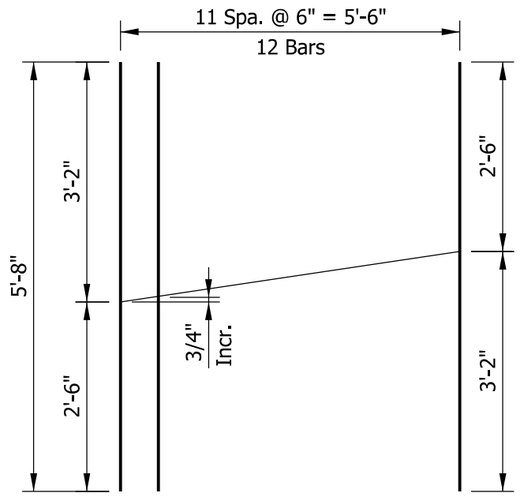

5850 x 5'-8"
(1 Bar Cuts 2)

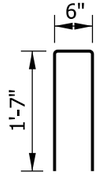

5805 x 3'-8"

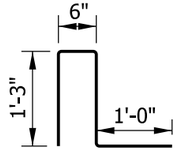

5811 x 4'-0"

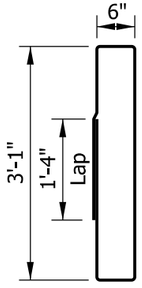

5812 x 8'-6"

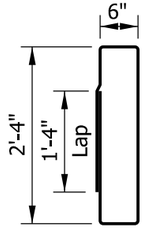

5813 x 7'-0"

INDIANA DEPARTMENT OF TRANSPORTATION

CONCRETE BRIDGE RAILING
TRANSITION, TTX

SEPTEMBER 2014

STANDARD DRAWING NO. E 706-TTTX-02

ELIZABETH W. PHILLIPS
REGISTERED
No. 10200124
STATE OF INDIANA
PROFESSIONAL ENGINEER

/s/ Elizabeth W. Phillips 09/23/13
DESIGN STANDARDS ENGINEER DATE

/s/ Mark A. Miller 09/26/13
CHIEF ENGINEER DATE

INDEX	
SHEET NO.	SUBJECT
1	Fabrication Tolerances Index and General Notes
2	Fabrication Tolerances Prestressed Box Beam
3	Fabrication Tolerances Prestressed I-Beam and Bulb-Tee Beam
4	Fabrication Tolerances Prestressed NEXT Beam

GENERAL NOTES:

1. Tolerances shown are maximum permissible variations from the dimensions shown on the shop drawings. Tolerances shall not be considered cumulative. Longitudinal tolerances are based on design length. Casting length shall be adjusted to compensate for shrinkage and plastic flow.

2. Mild reinforcing bar concrete cover tolerance shall be +3/8 in. to -1/8 in.

3. Vertical camber shall be checked within 72 hours of transfer of prestressing force. Camber shall be measured within three days prior to shipping and any exceedances shall be reported to the Engineer prior to shipping.

4. Tolerance in length of beam shall be checked after the final curing phase and within three days prior to shipping.

5. Tolerance in horizontal alignment shall be checked immediately after de-tensioning is complete, prior to removal from bed.

6. At concrete bearing area, deviation from plane surface when tested in all directions of the plane surface with a steel straightedge shall not be more than ±1/8 in.

7. Local smoothness of any surface shall not deviate from a 10 ft straightedge by more than 1/8 in.

INDIANA DEPARTMENT OF TRANSPORTATION

FABRICATION TOLERANCES
INDEX AND GENERAL NOTES

SEPTEMBER 2025

STANDARD DRAWING NO. E 707-BPBF-01

ELIZABETH P. MOUSER
REGISTERED
No.
10200124
STATE OF
INDIANA
PROFESSIONAL ENGINEER

01/22/2025
DESIGN STANDARDS ENGINEER DATE

03/20/2025
CHIEF ENGINEER DATE

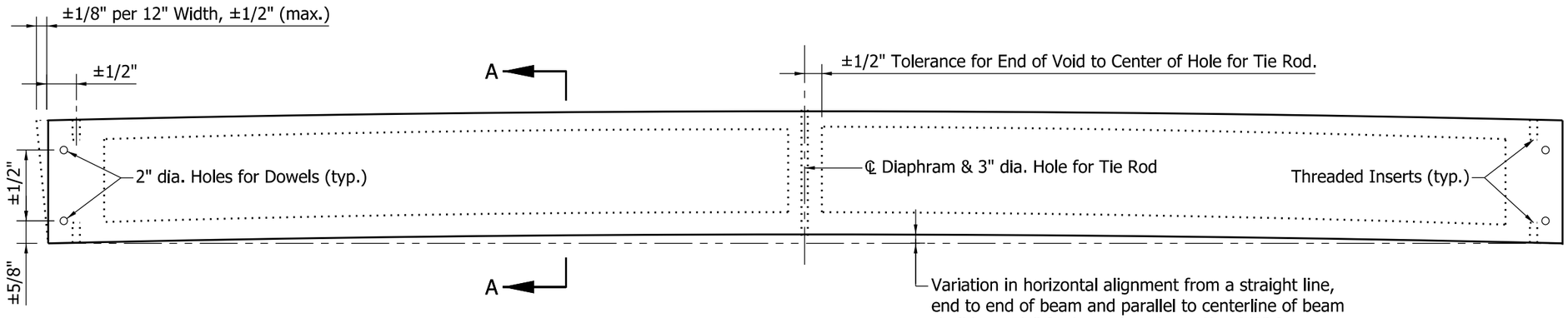

PLAN

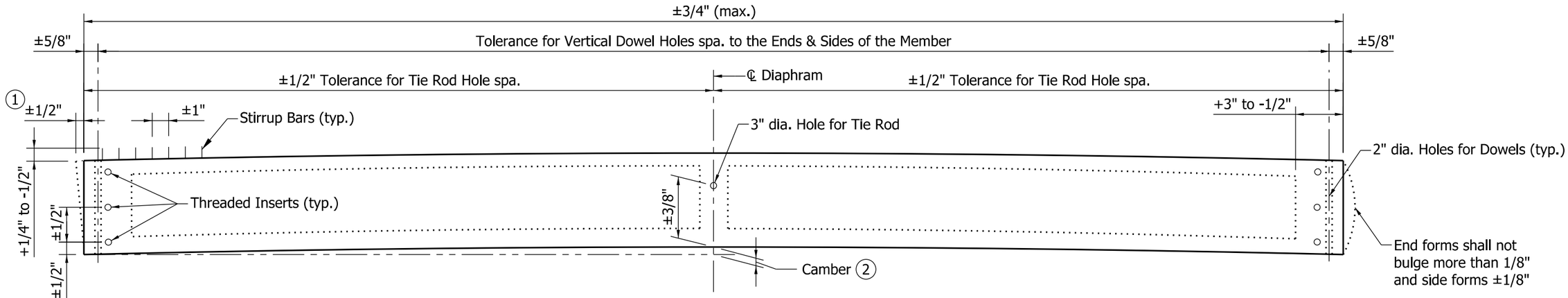

ELEVATION

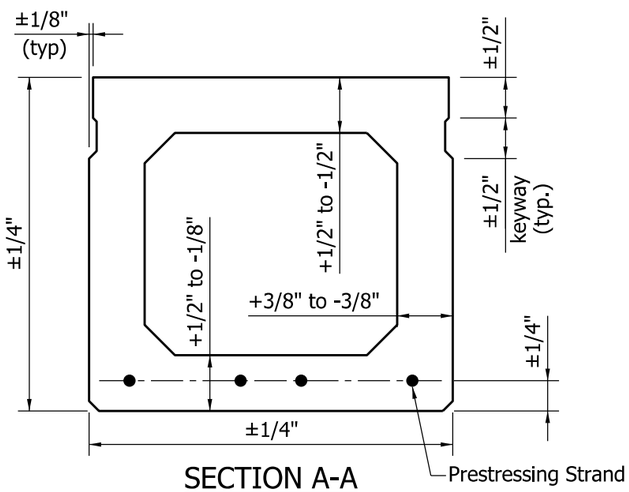

SECTION A-A

NOTES:

① Maximum variation from specified elevation end squareness or skew.

② Camber variation from camber shown on the shop drawings shall be ±1/8 in. per 10 ft length with ± 1/2 in. maximum

INDIANA DEPARTMENT OF TRANSPORTATION

FABRICATION TOLERANCES
PRESTRESSED BOX BEAM

SEPTEMBER 2025

STANDARD DRAWING NO. E 707-BPBF-02

ELIZABETH P. MOUSER
REGISTERED
No. 10200124
STATE OF INDIANA
PROFESSIONAL ENGINEER

01/22/2025
DESIGN STANDARDS ENGINEER DATE

03/20/2025
CHIEF ENGINEER DATE

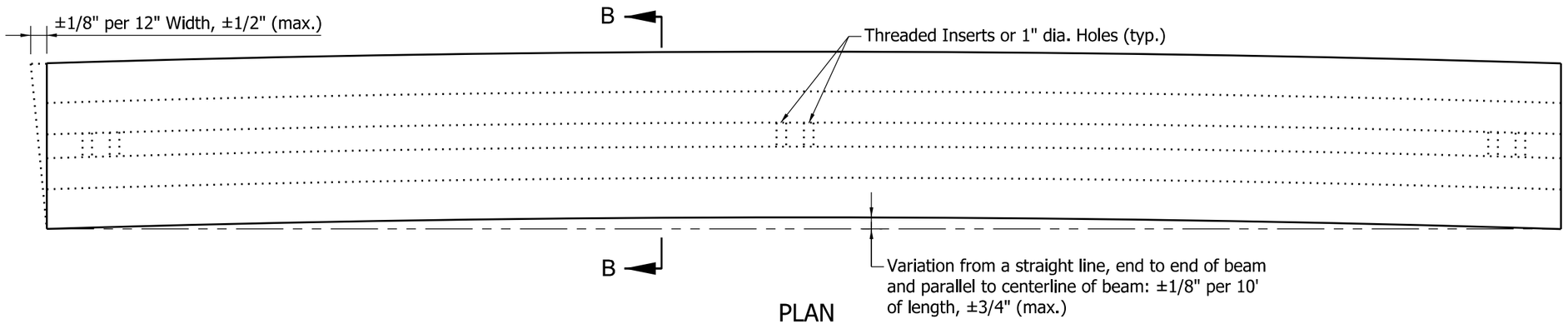

PLAN

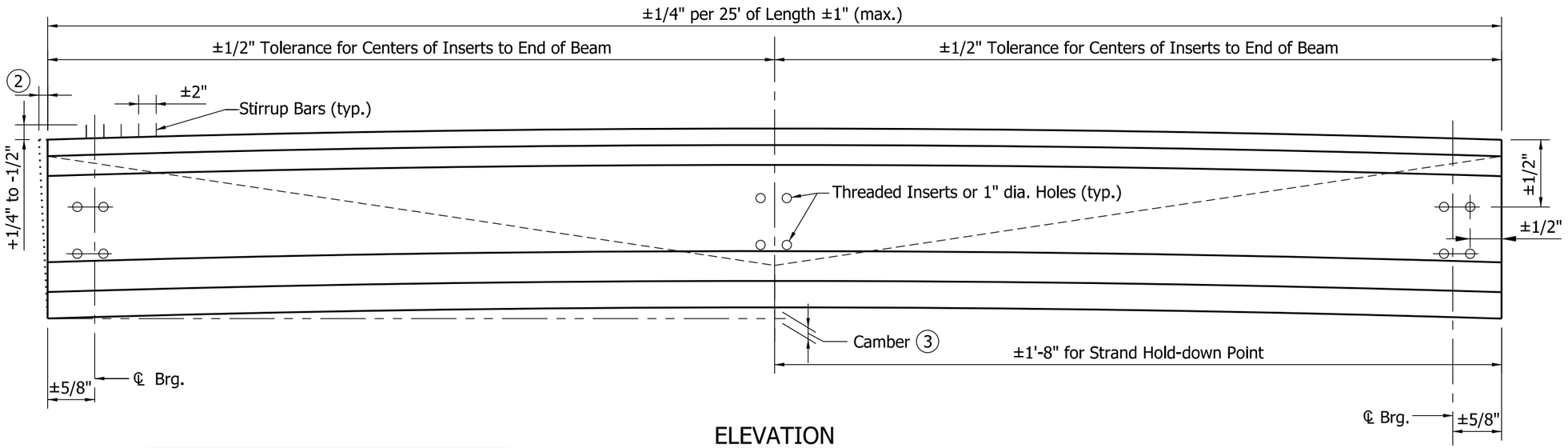

ELEVATION

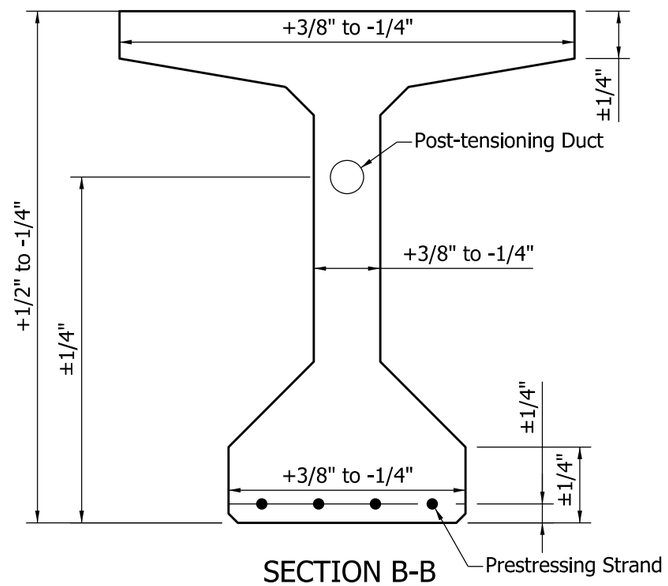

SECTION B-B

(Bulb-Tee Section Shown, I-Beam Similar)

NOTES:

1. Center of gravity of draped strand group at the end of the beam shall not be more than ±1/2 in.

② Maximum variation from specified elevation end squareness or skew shall be ±3/16 in. per 12 in. of beam height, 1 in. max.

③ Camber variation from camber shown on the shop drawings shall be ±1/2 in. maximum for beam length of 80 ft or less, ±1 in. maximum for beam length greater than 80 ft.

INDIANA DEPARTMENT OF TRANSPORTATION

FABRICATION TOLERANCES PRESTRESSED I-BEAM AND BULB-TEE BEAM

SEPTEMBER 2025

STANDARD DRAWING NO. E 707-BPBF-03

ELIZABETH P. MOUSER REGISTERED No. 10200124 STATE OF INDIANA PROFESSIONAL ENGINEER

DESIGN STANDARDS ENGINEER — DATE 01/22/2025

CHIEF ENGINEER — DATE 03/20/2025

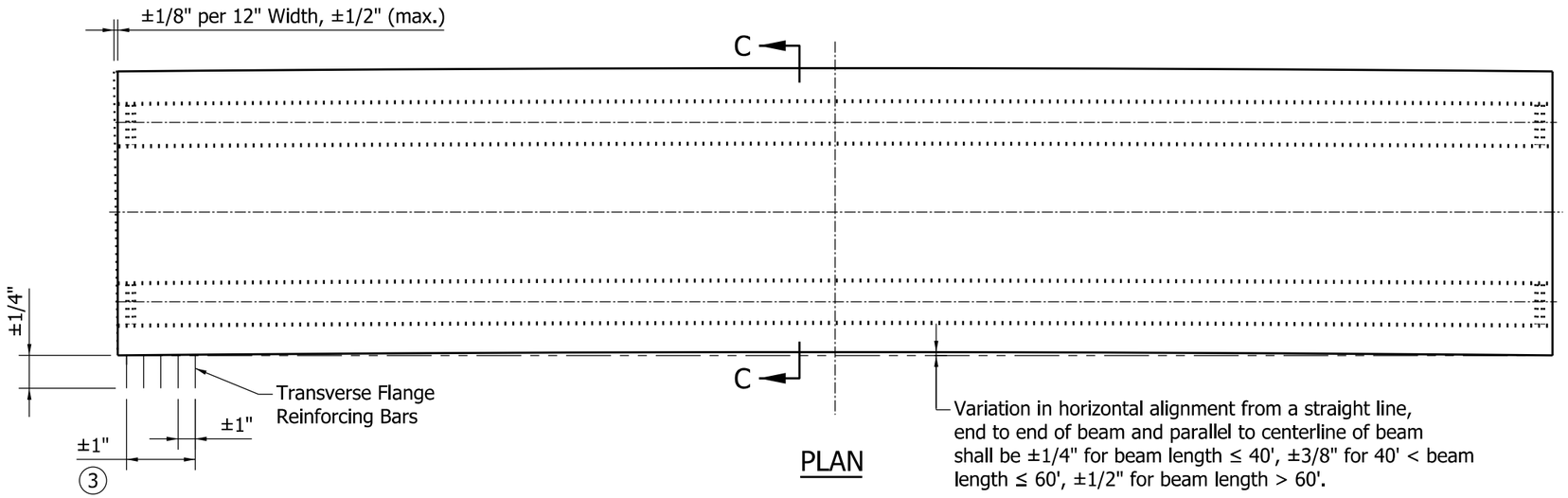

PLAN

Variation in horizontal alignment from a straight line, end to end of beam and parallel to centerline of beam shall be ±1/4" for beam length ≤ 40', ±3/8" for 40' < beam length ≤ 60', ±1/2" for beam length > 60'.

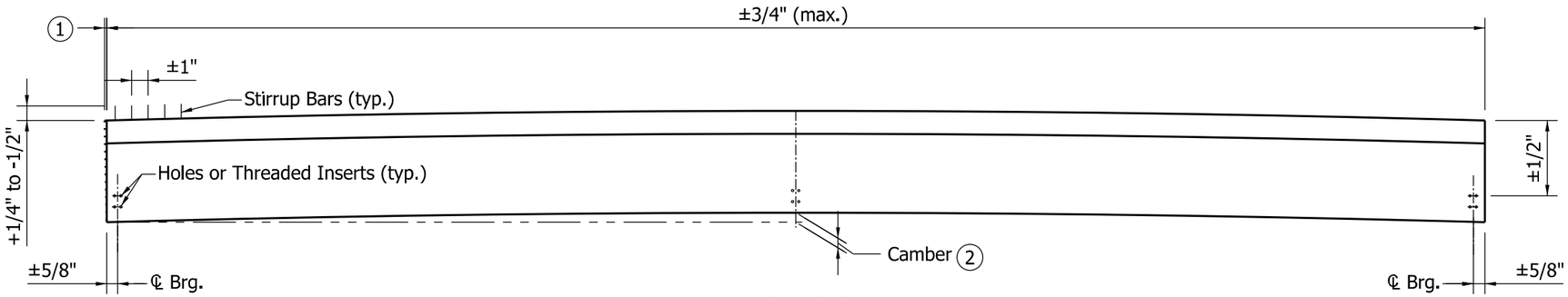

ELEVATION

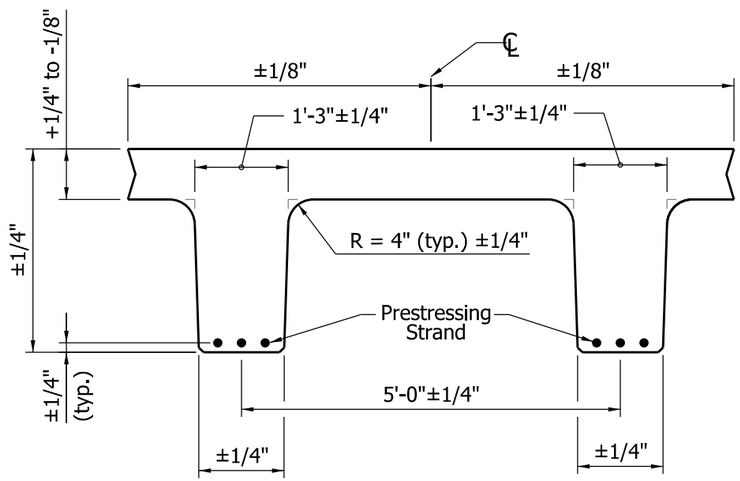

SECTION C-C

NOTES:

1. Maximum variation from specified elevation end squareness or skew shall be ±1/8 in. per 12 in. of beam height, 1/2 in. max.
2. Camber variation from camber shown on the shop drawings shall be ±1/8 in. per 10 ft length with ±1/2 in. maximum.
3. Spacing tolerance for transverse flange reinforcing bars that project beyond the edge of the top flange shall be measured relative to plan location of each bar and shall not be solely based on as-built location of the adjacent bars.

INDIANA DEPARTMENT OF TRANSPORTATION

FABRICATION TOLERANCES PRESTRESSED NEXT BEAM

SEPTEMBER 2025

STANDARD DRAWING NO. E 707-BPBF-04

ELIZABETH P. MOUSER
REGISTERED
No. 10200124
STATE OF INDIANA
PROFESSIONAL ENGINEER

01/22/2025
DESIGN STANDARDS ENGINEER — DATE

03/20/2025
CHIEF ENGINEER — DATE

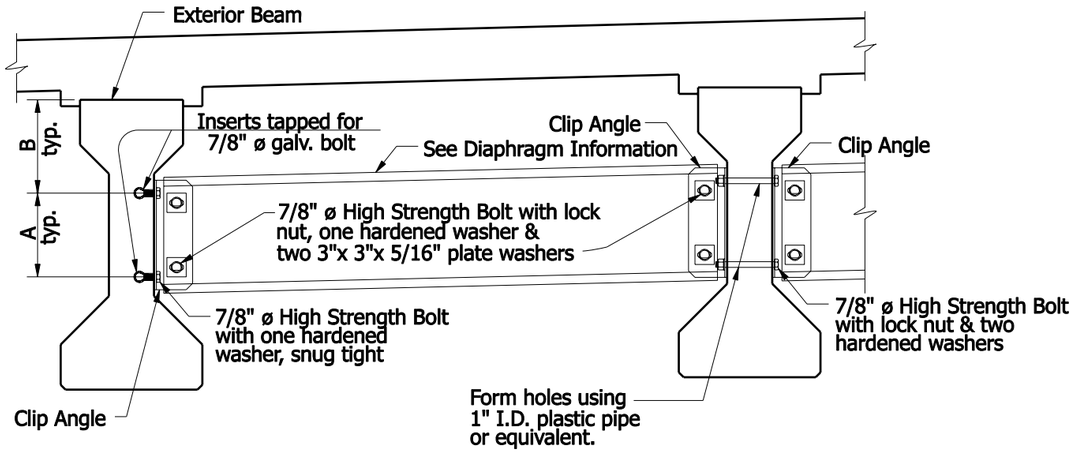

INTERMEDIATE DIAPHRAGM

Typical for Square Structure

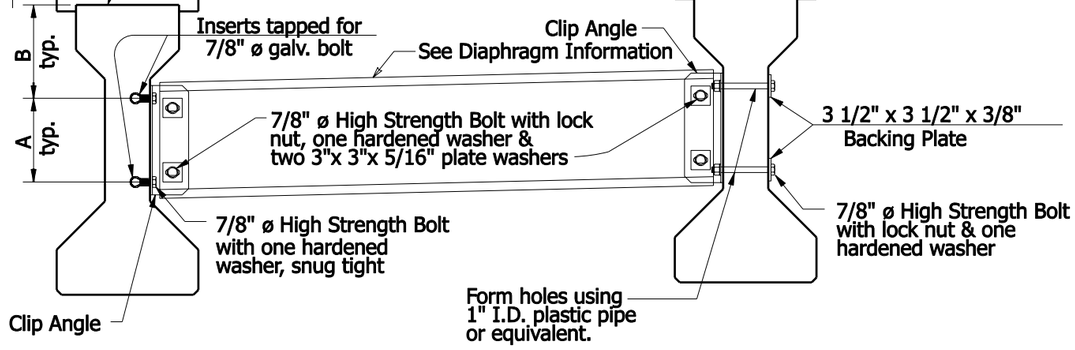

INTERMEDIATE DIAPHRAGM

Typical for Skewed Structure

Diaphragm Information							
Beam Type	Dimension						Channel Type
	A	B	C	D	E	F	
Type II	9"	1'-0"	1'-1"	6"	3 1/2"	3"	C 12 x 20.7
Type III	1'-1"	1'-2 1/2"	1'-5"	10"	3 1/2"	4"	MC 18 x 42.7
Type IV	1'-4"	1'-5 1/2"	1'-8"	10"	5"	4"	MC 18 x 42.7

NOTES:

1. See Standard Drawing E 707-SDPC-02 for connection details.

INDIANA DEPARTMENT OF TRANSPORTATION

STEEL DIAPHRAGMS AASHTO I-BEAMS

SEPTEMBER 2007

STANDARD DRAWING NO. E 707-SDPC-01

RICHARD L. VanCLEAVE REGISTERED No. 9750 STATE OF INDIANA PROFESSIONAL ENGINEER

DESIGN STANDARDS ENGINEER

/s/ Richard L. VanCleave 09/04/07
DESIGN STANDARDS ENGINEER — DATE

/s/ Mark A. Miller 09/04/07
CHIEF HIGHWAY ENGINEER — DATE

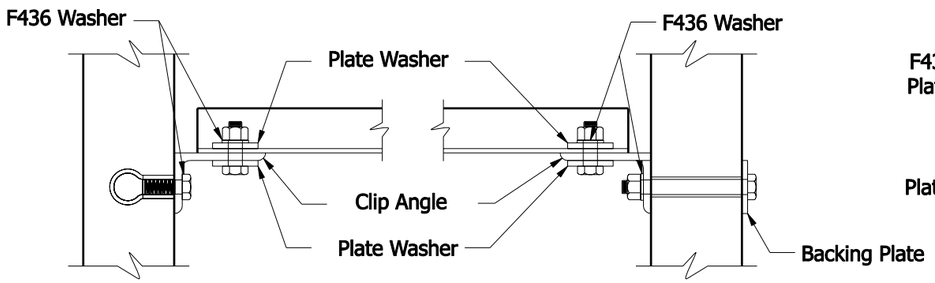

Exterior Beam

Interior Beam, Skewed Structure

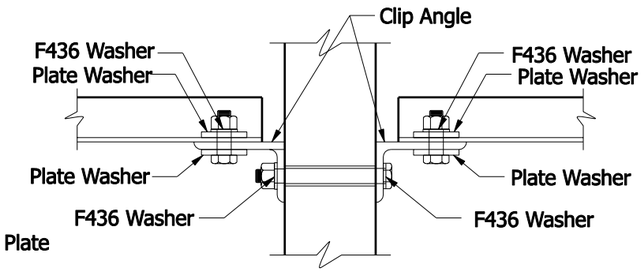

Interior Beam, Square Structure

CONNECTION DETAILS

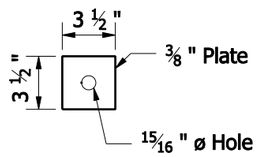

BACKING PLATE

Skewed Structure Only

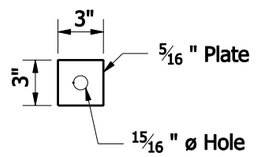

PLATE WASHER

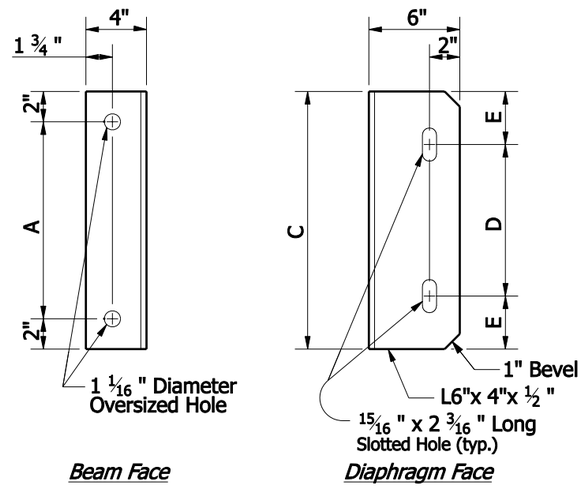

Beam Face

Diaphragm Face

CLIP ANGLE

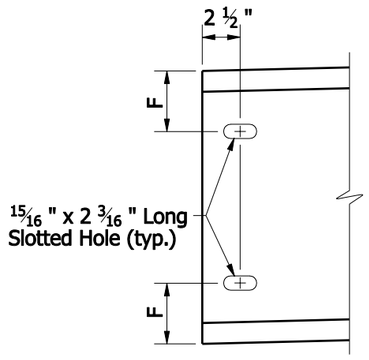

CHANNEL END

INDIANA DEPARTMENT OF TRANSPORTATION

STEEL DIAPHRAGMS
AASHTO I-BEAMS

SEPTEMBER 2007

STANDARD DRAWING NO. E 707-SDPC-02

RICHARD L. VanCLEAVE
REGISTERED
No. 9750
STATE OF INDIANA
PROFESSIONAL ENGINEER

DESIGN STANDARDS ENGINEER

/s/ Richard L. vanCleave *09/04/07*
DESIGN STANDARDS ENGINEER — DATE

/s/ Mark a. Miller *09/04/07*
CHIEF HIGHWAY ENGINEER — DATE

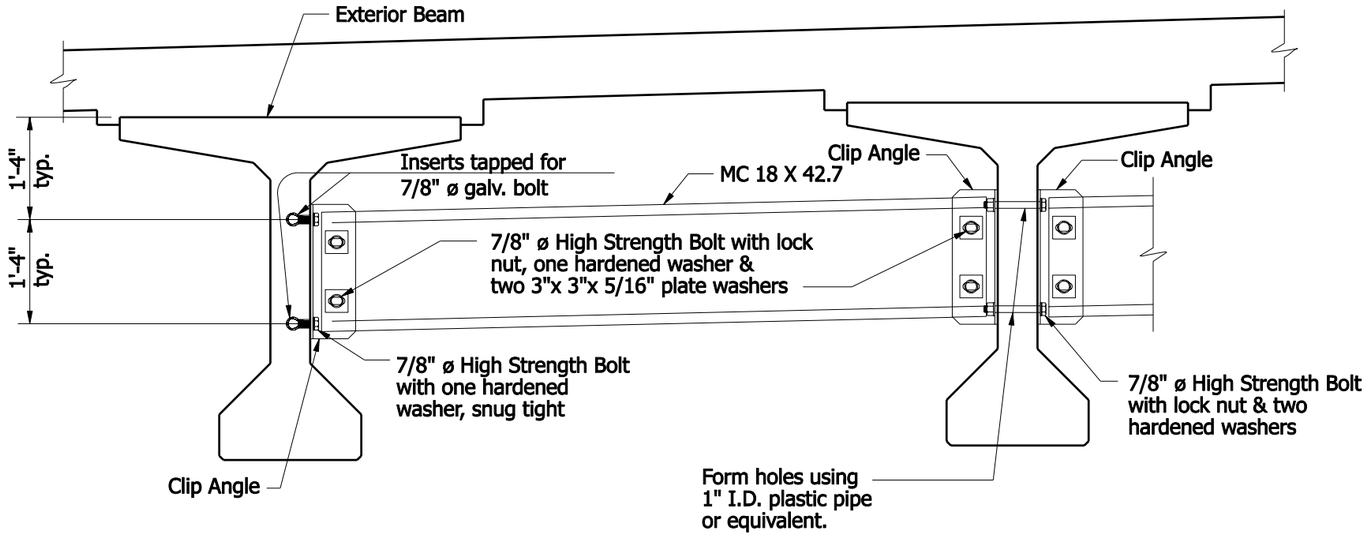

INTERMEDIATE DIAPHRAGM

Typical for Square Structure

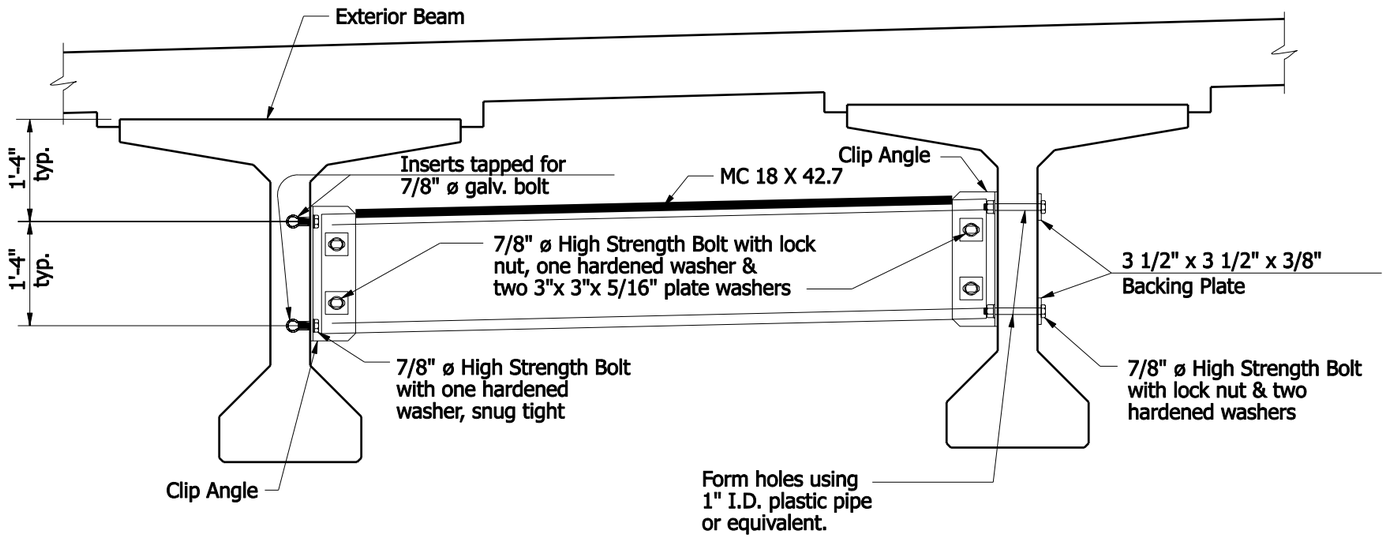

INTERMEDIATE DIAPHRAGM

Typical for Skewed Structure

NOTES:

1. See Standard Drawing E 707-SDPC-04 for connection details.

INDIANA DEPARTMENT OF TRANSPORTATION

STEEL DIAPHRAGMS
INDIANA BULB-TEES, 54-IN. DEPTH

SEPTEMBER 2007

STANDARD DRAWING NO. E 707-SDPC-03

RICHARD L. VanCLEAVE REGISTERED No. 9750 STATE OF INDIANA PROFESSIONAL ENGINEER

DESIGN STANDARDS ENGINEER

/s/ Richard L. VanCleave 09/04/07

DESIGN STANDARDS ENGINEER — DATE

/s/ Mark A. Miller 09/04/07

CHIEF HIGHWAY ENGINEER — DATE

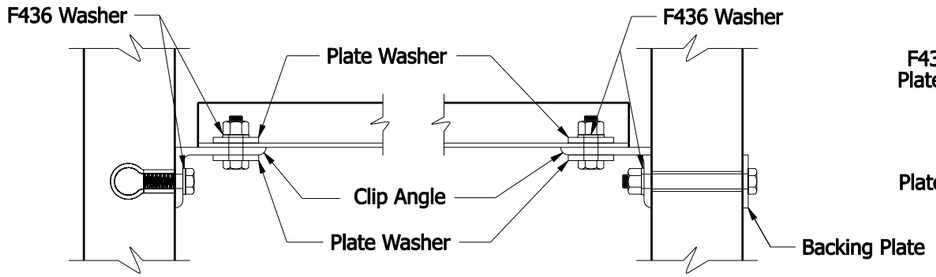

Exterior Beam

Interior Beam, Skewed Structure

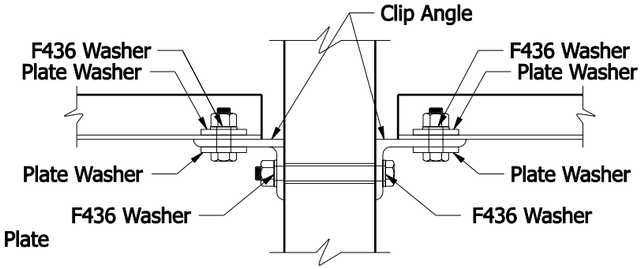

Interior Beam, Square Structure

CONNECTION DETAILS

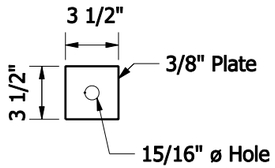

BACKING PLATE

Skewed Structure Only

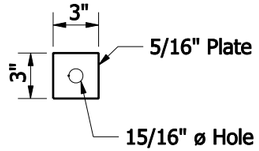

PLATE WASHER

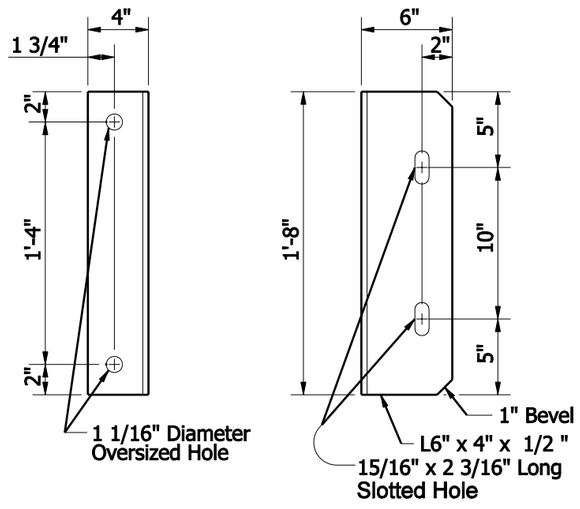

Beam Face

Diaphragm Face

CLIP ANGLE

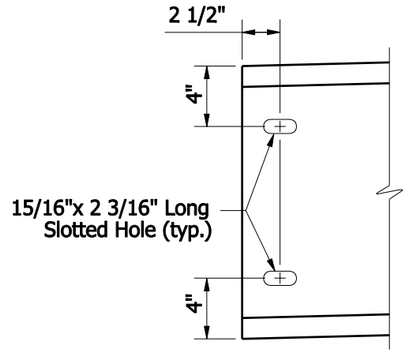

CHANNEL END

INDIANA DEPARTMENT OF TRANSPORTATION

STEEL DIAPHRAGMS
INDIANA BULB-TEES, 54-IN. DEPTH

SEPTEMBER 2007

STANDARD DRAWING NO. E 707-SDPC-04

RICHARD L. VanCLEAVE REGISTERED No. 9750 STATE OF INDIANA PROFESSIONAL ENGINEER

DESIGN STANDARDS ENGINEER

/s/ Richard L. VanCleave 09/04/07
DESIGN STANDARDS ENGINEER — DATE

/s/ Mark A. Miller 09/04/07
CHIEF HIGHWAY ENGINEER — DATE

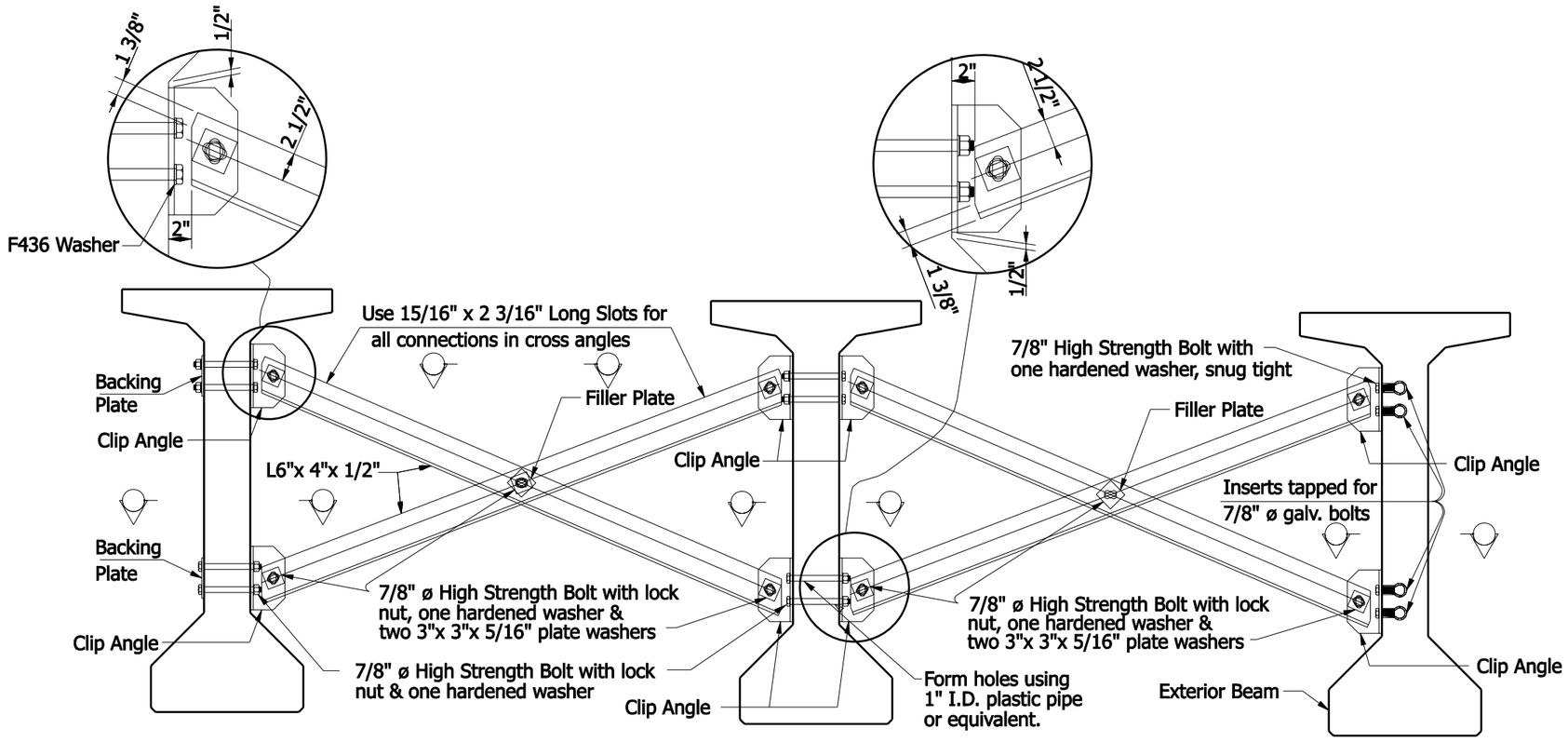

NOTES:

1. See Standard Drawing E 707-SDPC-06 for connection details.

INTERMEDIATE DIAPHRAGM DETAILS

INDIANA DEPARTMENT OF TRANSPORTATION

STEEL DIAPHRAGMS
INDIANA BULB-TEES, 60 IN. OR DEEPER

SEPTEMBER 2007

STANDARD DRAWING NO. E 707-SDPC-05

RICHARD L. VanCLEAVE
REGISTERED
No. 9750
STATE OF INDIANA
PROFESSIONAL ENGINEER

DESIGN STANDARDS ENGINEER

/s/ Richard L. VanCleave 09/04/07
DESIGN STANDARDS ENGINEER — DATE

/s/ Mark A. Miller 09/04/07
CHIEF HIGHWAY ENGINEER — DATE

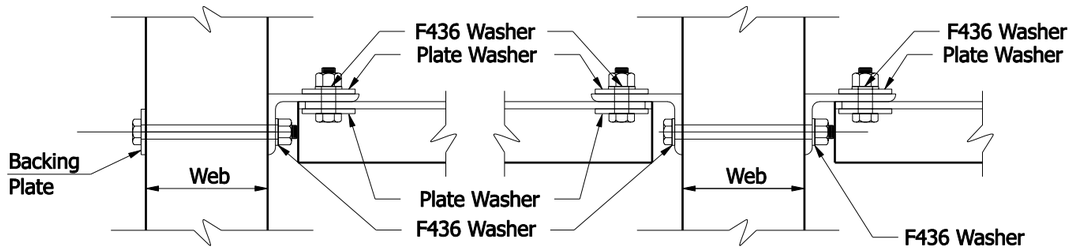

SECTION T-T
Interior Beam, Skewed Structure

SECTION B-B
Interior Beam, Square Structure

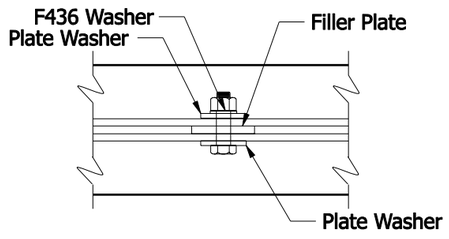

SECTION X-X

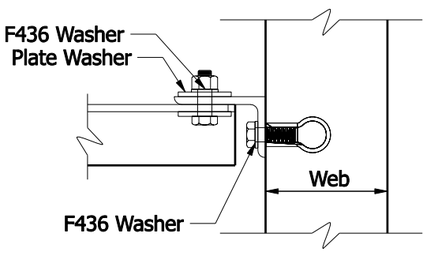

SECTION E-E
Exterior Beam

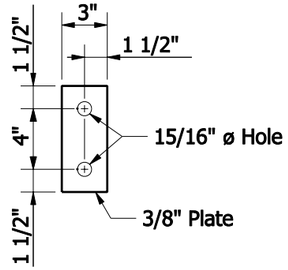

BACKING PLATE

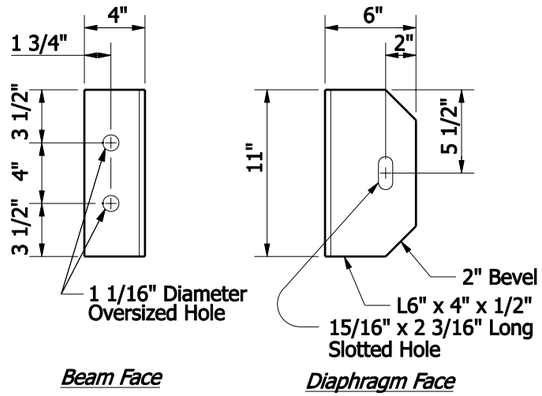

CLIP ANGLE

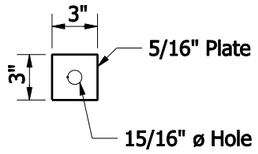

PLATE WASHER

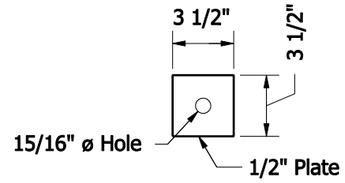

FILLER PLATE

INDIANA DEPARTMENT OF TRANSPORTATION

STEEL DIAPHRAGMS
INDIANA BULB-TEES, 60 IN. OR DEEPER

SEPTEMBER 2007

STANDARD DRAWING NO. E 707-SDPC-06

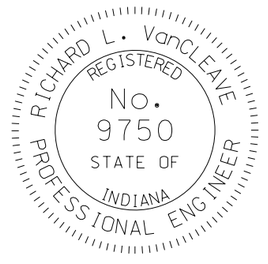

DESIGN STANDARDS ENGINEER

/s/ Richard L. VanCleave 09/04/07
DESIGN STANDARDS ENGINEER — DATE

/s/ Mark A. Miller 09/04/07
CHIEF HIGHWAY ENGINEER — DATE

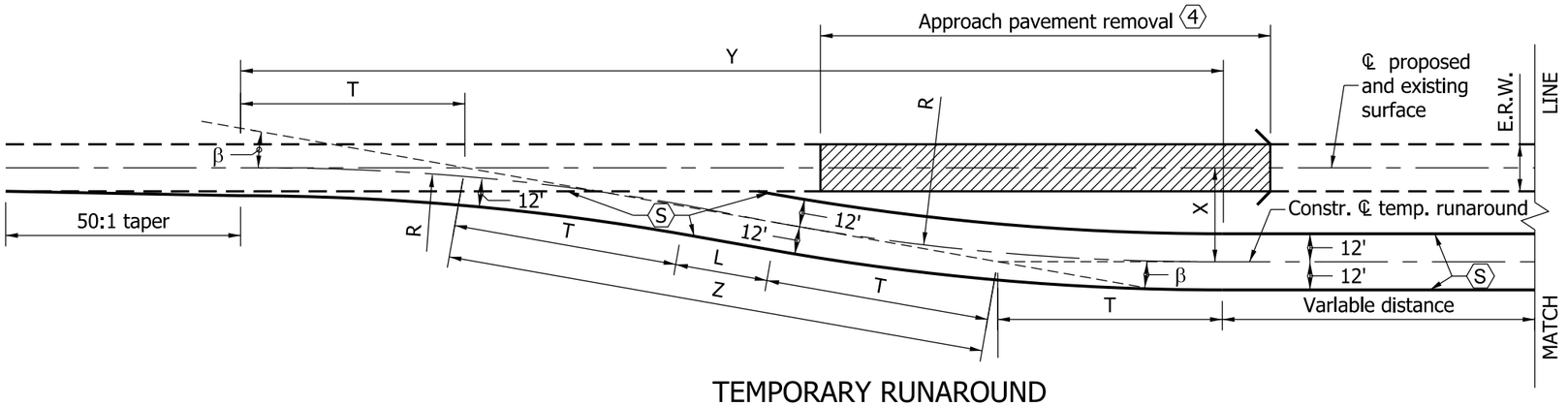

TEMPORARY RUNAROUND

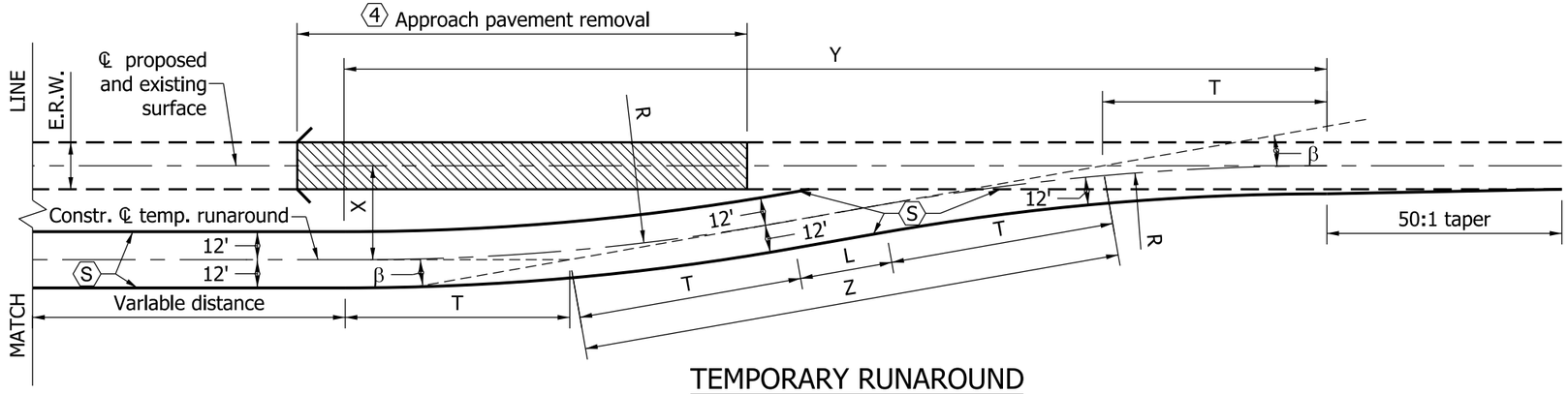

TEMPORARY RUNAROUND

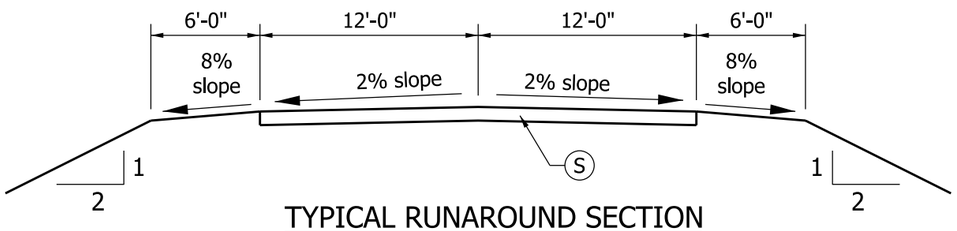

TYPICAL RUNAROUND SECTION

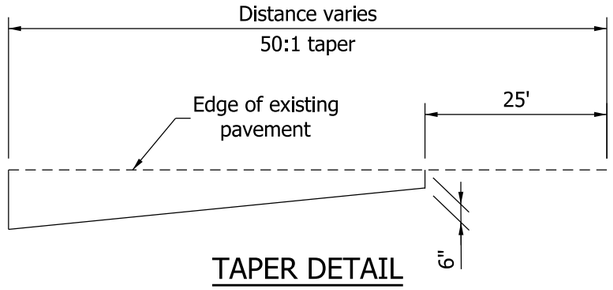

TAPER DETAIL

NOTES:

1. See Standard Drawing E 713-TCTR-04 for general notes with numbered hexagon frame that apply to this sheet.
2. See Standard Drawings E 713-TCTR-02 for runaround geometrics and -02A for surface areas.
3. See Standard Drawing E 801-TCLG-01 for standard notes and legend.

LEGEND:

Work Area

INDIANA DEPARTMENT OF TRANSPORTATION

TEMPORARY RUNAROUND GEOMETRICS

SEPTEMBER 2011

STANDARD DRAWING NO. E 713-TCTR-01

RICHARD L. VanCLEAVE REGISTERED No. 9750 STATE OF INDIANA PROFESSIONAL ENGINEER

DESIGN STANDARDS ENGINEER

DETAILS PLACED IN THIS FORMAT 9/1/2011

/s/ Richard L. VanCleave 09/01/11

DESIGN STANDARDS ENGINEER DATE

/s/ Mark A. Miller 09/01/11

CHIEF HIGHWAY ENGINEER DATE

ORIGINALLY APPROVAL ON SEPTEMBER 9/1/06

RUNAROUND GEOMETRICS AND SURFACE AREAS

	TYPE A, ≥ 50 MPH						TYPE B, ≤ 45 MPH					
X (ft)	40	45	50	55	60	65	40	45	50	55	60	65
β	10°	10°	10°	10°	10°	10°	13°	13°	13°	13°	13°	13°
Z (ft)	230.35	259.14	287.94	316.73	345.53	374.32	177.82	200.04	222.27	244.50	266.72	288.95
R (ft)	1070	1070	1070	1070	1070	1070	720	720	720	720	720	720
T (ft)	93.61	93.61	93.61	93.61	93.61	93.61	82.03	82.03	82.03	82.03	82.03	82.03
L (ft)	43.13	71.92	100.72	129.51	158.31	187.10	13.76	35.98	58.21	80.44	102.66	124.89
Y (ft)	414.07	442.42	470.79	499.14	527.50	555.85	337.32	358.97	380.63	402.29	423.94	445.60
E.R.W. (ft)	SURFACE AREA OF RUNAROUND IN SYS. (VARIABLE DISTANCE NOT INCLUDED)											
18	1555	1751	1950	2148	2347	2545	1280	1433	1586	1739	1892	2045
20	1493	1691	1890	2088	2287	2585	1225	1378	1531	1684	1837	1990
22	1428	1627	1825	2024	2222	2420	1170	1323	1476	1629	1783	1935
24	1375	1574	1773	1971	2170	2368	1127	1280	1432	1586	1739	1892

ERW - Existing Roadway Width

INDIANA DEPARTMENT OF TRANSPORTATION

TEMPORARY RUNAROUND GEOMETRICS

SEPTEMBER 2011

STANDARD DRAWING NO. E 713-TCTR-02

RICHARD L. VanCLEAVE REGISTERED No. 9750 STATE OF INDIANA PROFESSIONAL ENGINEER

DESIGN STANDARDS ENGINEER

DETAILS PLACED IN THIS FORMAT 9/1/2011

/s/ Richard L. VanCleave *09/01/11*

DESIGN STANDARDS ENGINEER DATE

/s/ Mark A. Miller *09/01/11*

CHIEF HIGHWAY ENGINEER DATE

ORIGINALLY APPROVAL ON SEPTEMBER 9/1/06

RUNAROUND GEOMETRICS AND SURFACE AREAS						
TYPE C						
X (ft)	40	45	50	55	60	65
β	20°	20°	20°	20°	20°	20°
Z (ft)	116.95	131.57	146.19	160.81	175.43	190.05
R (ft)	280	280	280	280	280	280
T (ft)	49.37	49.37	49.37	49.37	49.37	49.37
L (ft)	18.21	32.83	47.45	62.07	76.69	91.31
Y (ft)	208.64	222.38	236.11	249.85	263.59	277.33
E.R.W. (ft)	RUNAROUND AREA, SYS.					
18	816	916	1017	1117	1218	1320
20	775	875	976	1076	1177	1277
22	734	835	935	1036	1136	1237
24	703	806	907	1007	1108	1208

ERW - Existing Roadway Width

ALLOWABLE RUNAROUND TYPE VS. POSTED SPEED																		
EXISTING POSTED SPEED (mph)	55	50	45		40		35			30			25			20		
ALLOWABLE TYPE	A	A	A	B	A	B	A	B	C	A	B	C	A	B	C	A	B	C
RUNAROUND POSTED SPEED (mph)	45	45	45	35	40	35	35	35	25	30	30	25	25	25	25	20	20	20

INDIANA DEPARTMENT OF TRANSPORTATION

TEMPORARY RUNAROUND GEOMETRICS

SEPTEMBER 2011

STANDARD DRAWING NO. E 713-TCTR-02A

RICHARD L. VanCLEAVE REGISTERED No. 9750 STATE OF INDIANA PROFESSIONAL ENGINEER

DESIGN STANDARDS ENGINEER

DETAILS PLACED IN THIS FORMAT 9/1/2011

/s/ Richard L. VanCleave 09/01/11

DESIGN STANDARDS ENGINEER DATE

/s/ Mark A. Miller 09/01/11

CHIEF HIGHWAY ENGINEER DATE

ORIGINALLY APPROVAL ON SEPTEMBER 9/1/06

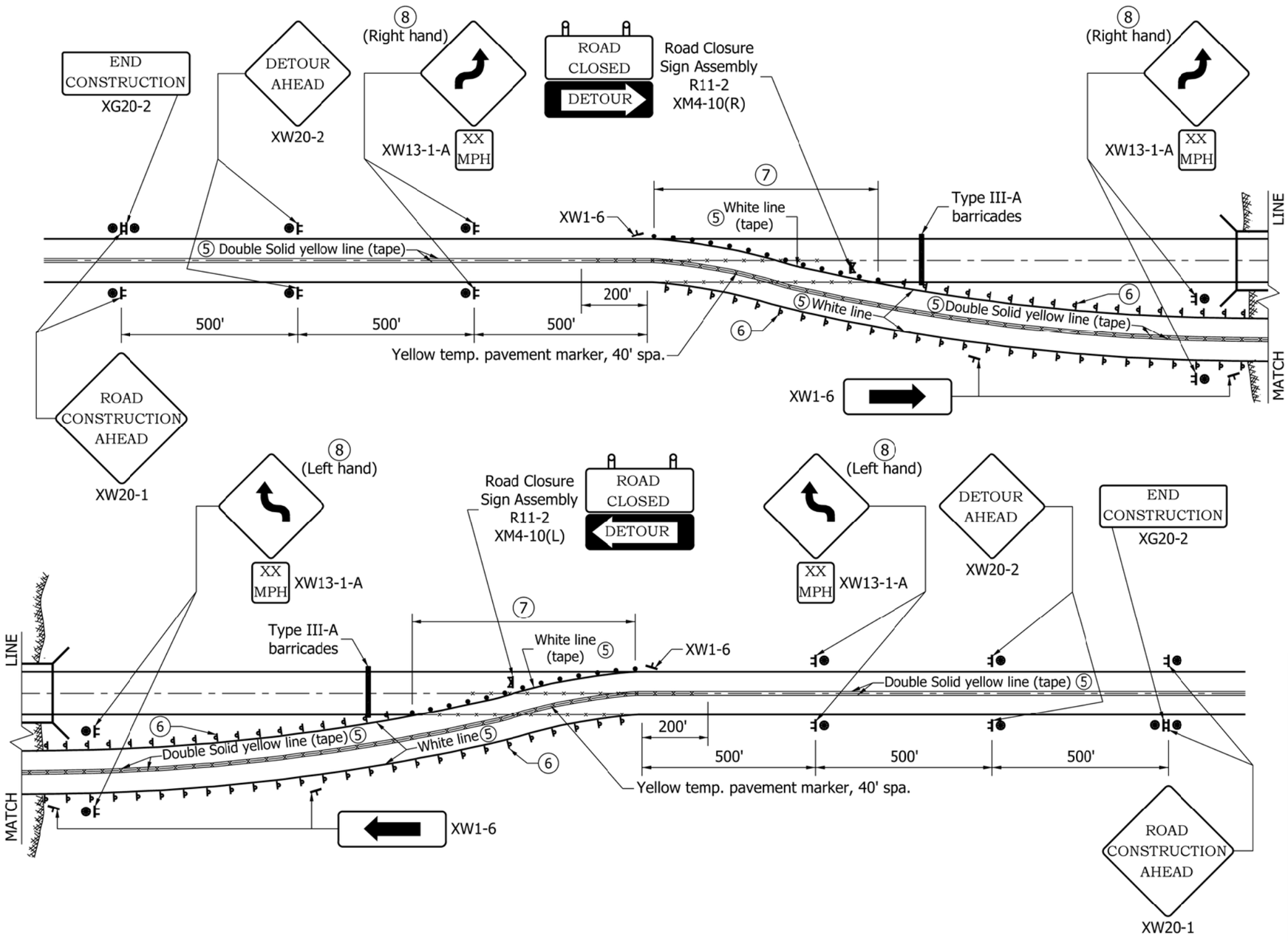

NOTES:

1. See Standard Drawing E 713-TCTR-04 for notes that apply to this sheet.
2. See Standard Drawing E 801-TCLG-01 for standard notes and legend.

INDIANA DEPARTMENT OF TRANSPORTATION

TEMPORARY RUNAROUND SIGNING AND MARKING

SEPTEMBER 2011

STANDARD DRAWING NO. E 713-TCTR-03

RICHARD L. VanCLEAVE REGISTERED No. 9750 STATE OF INDIANA PROFESSIONAL ENGINEER

DESIGN STANDARDS ENGINEER

DETAILS PLACED IN THIS FORMAT 9/1/2011

/s/ Richard L. VanCleave 9/01/11

DESIGN STANDARDS ENGINEER DATE

/s/ Mark A. Miller 9/01/11

CHIEF HIGHWAY ENGINEER DATE

ORIGINALLY APPROVAL ON SEPTEMBER 9/1/97

GENERAL NOTES:

1. The pavement section for trucks count exceeding the values shown in (S) in the Legend shall be as shown elsewhere in the plans.

   3. A temporary bridge or temporary pipe shall be used as specified. A 28'-0 clear roadway width shall be provided on a temporary bridge.

(4) The connection of the temporary runaround to the existing pavement shall be outside the limits of the approach pavement removal.

(5) Temporary pavement markings will be required as shown. The contractor shall have the option of using temporary tape or paint for all temporary pavement markings except where otherwise specified.

(6) Delineators type D-2 (white) shall be placed at 30 ft maximum spacing on both sides throughout the length of the temporary runaround, including across the temporary structure. If a temporary bridge is used, type 3 object markers shall be placed at all four corners in accordance with the MUTCD.

(7) Spacing of drums at this location shall be 20 ft.

(8) If the runaround posted speed limit is greater than 30 mph the reverse curve sign, XW1-4 (36" x 36"), shall be used at this location.
If the runaround posted advisory speed limit is 30 mph or less, the reverse turn sign, XW1-3 (36" x 36") shall be used.

LEGEND:

Delineator type D-2 (white)

(S) Pavement section for truck count, AADTT < 500, shall be:

165 #/yd² HMA Surface, Type A, on
275 #/yd² HMA Intermediate, Type A, on
6 in. compacted aggregate, size No. 53, Base, on
Type III Subgrade Treatment
(See Genaral Note #1)

INDIANA DEPARTMENT OF TRANSPORTATION

TEMPORARY RUNAROUND
GENERAL NOTES

SEPTEMBER 2010

STANDARD DRAWING NO. E 713-TCTR-04

RICHARD L. VanCLEAVE
REGISTERED
No. 9750
STATE OF INDIANA
PROFESSIONAL ENGINEER

DESIGN STANDARDS ENGINEER

/s/ Richard L. VanCleave 09/01/10
DESIGN STANDARDS ENGINEER DATE

/s/ Mark A. Miller 09/01/10
CHIEF HIGHWAY ENGINEER DATE

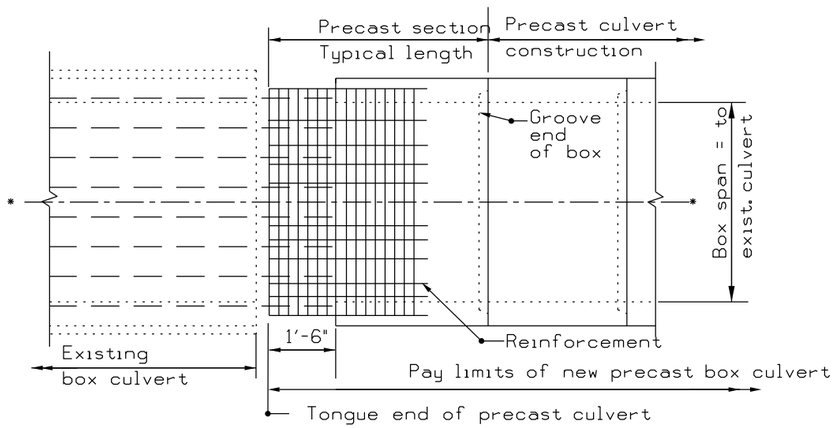

SECTION A-A CONNECTION VIEW

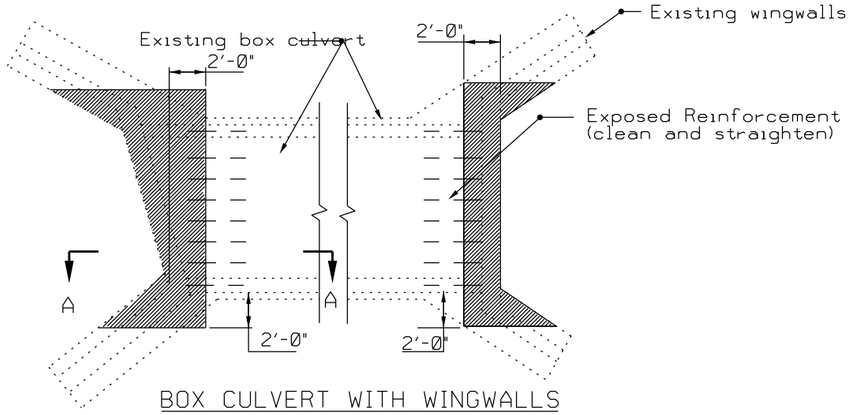

BOX CULVERT WITH WINGWALLS
EXTENSION PREPARATION

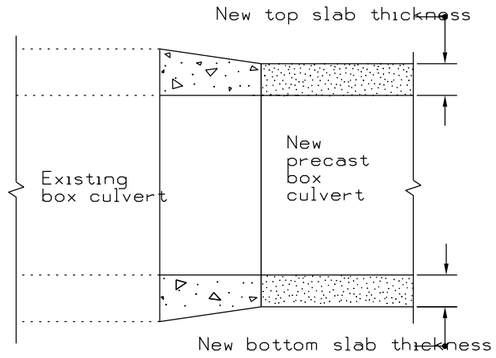

SECTION A-A AND B-B
(Showing cast-in-place section)

LEGEND :

- Removal
- Existing structure
- New element or structure

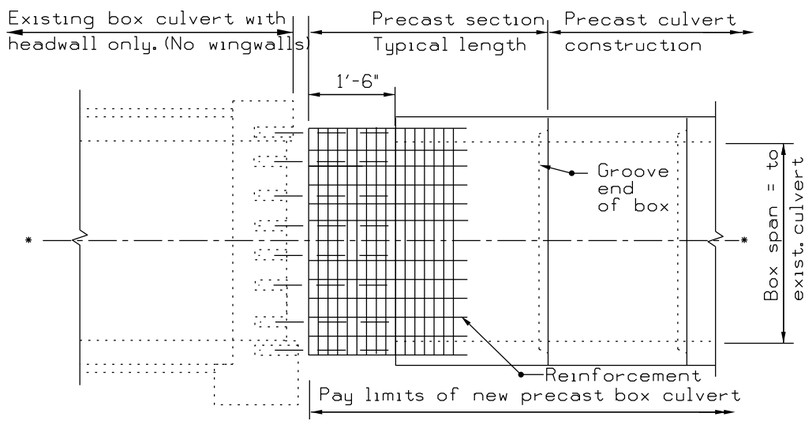

SECTION B-B CONNECTION VIEW

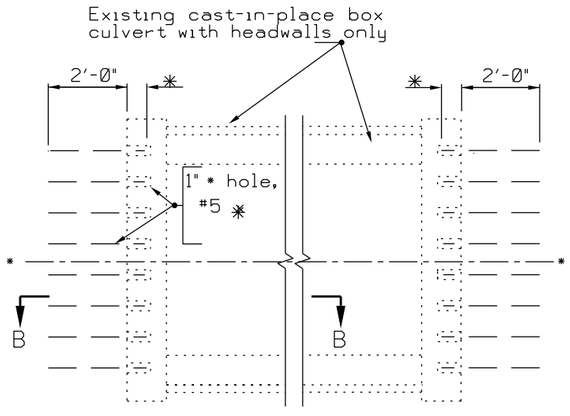

* length determined by manufacturer
of chemical anchor system

BOX CULVERT WITH HEADWALLS ONLY
EXTENSION PREPARATION

INDIANA DEPARTMENT OF TRANSPORTATION

PRECAST BOX-CULVERT EXTENSION

SEPTEMBER 2010

STANDARD DRAWING NO. E 714-BCEX-01

RICHARD L. VanCLEAVE
REGISTERED
No. 9750
STATE OF INDIANA
PROFESSIONAL ENGINEER

DESIGN STANDARDS ENGINEER

/s/ Richard L.VanCleave — *09/01/10*
DESIGN STANDARDS ENGINEER — DATE

/s/ Mark A. Miller — *09/01/10*
CHIEF HIGHWAY ENGINEER — DATE

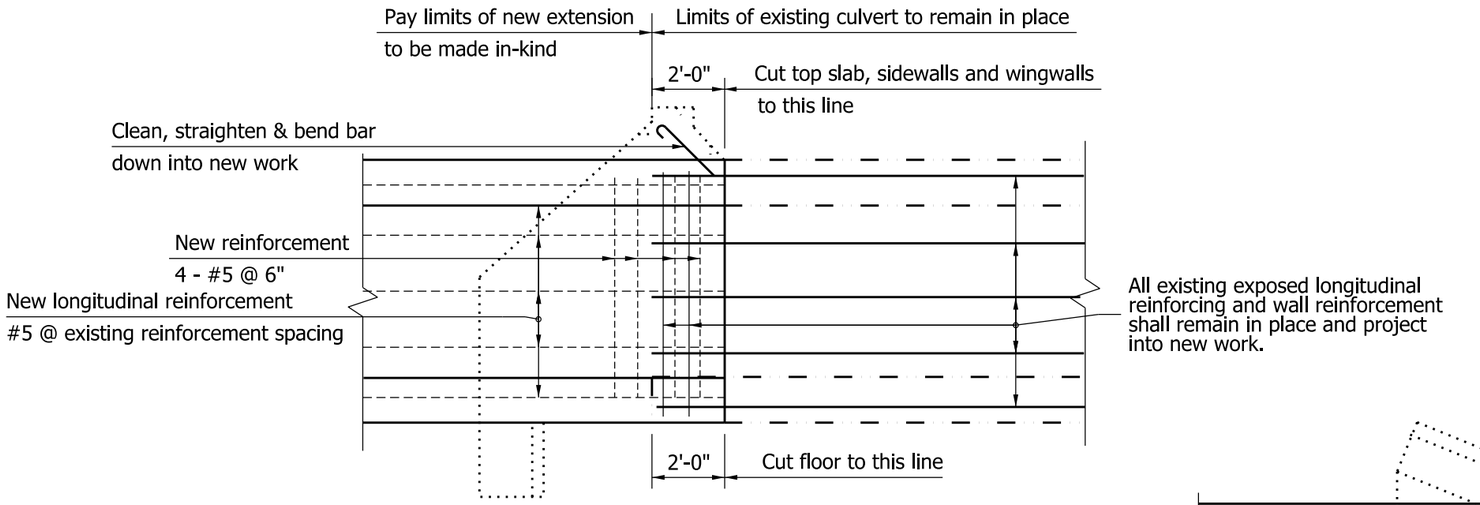

LONGITUDINAL SECTION
FOR ALL CULVERTS

NOTES:

1. Before removing existing concrete, saw around the perimeter of the removal areas on the interior and exterior of the culvert to a depth of 1".
2. New horizontal reinforcement shall be anchored into the culvert walls with bar hooks.

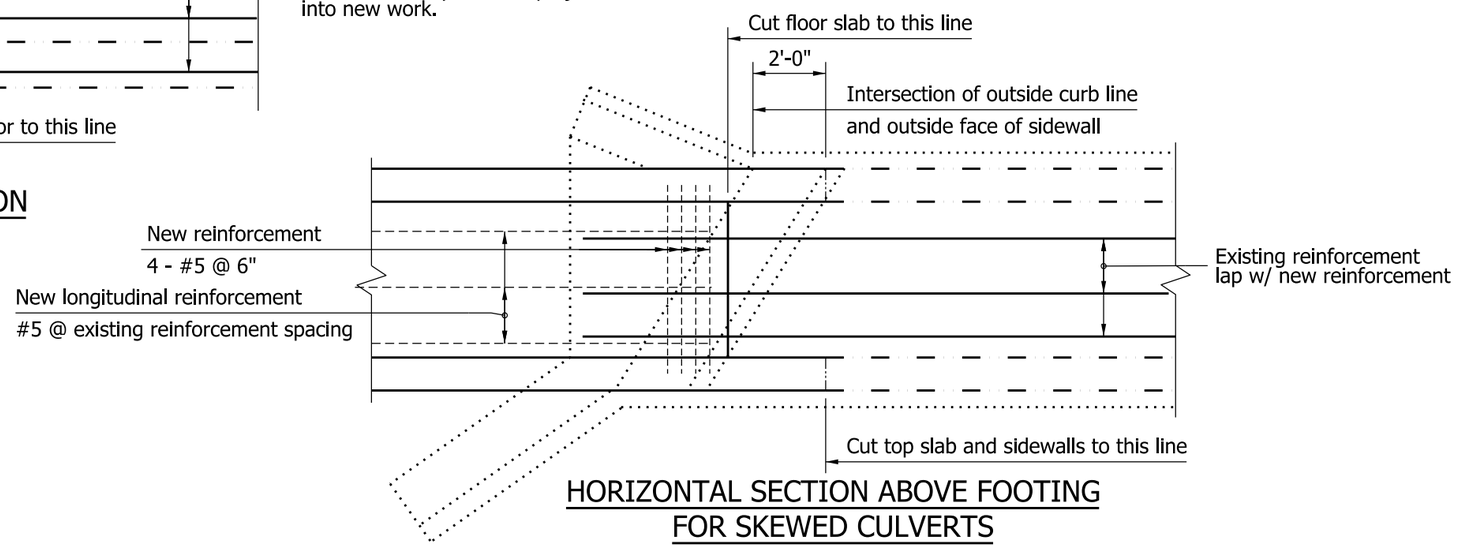

HORIZONTAL SECTION ABOVE FOOTING
FOR SKEWED CULVERTS

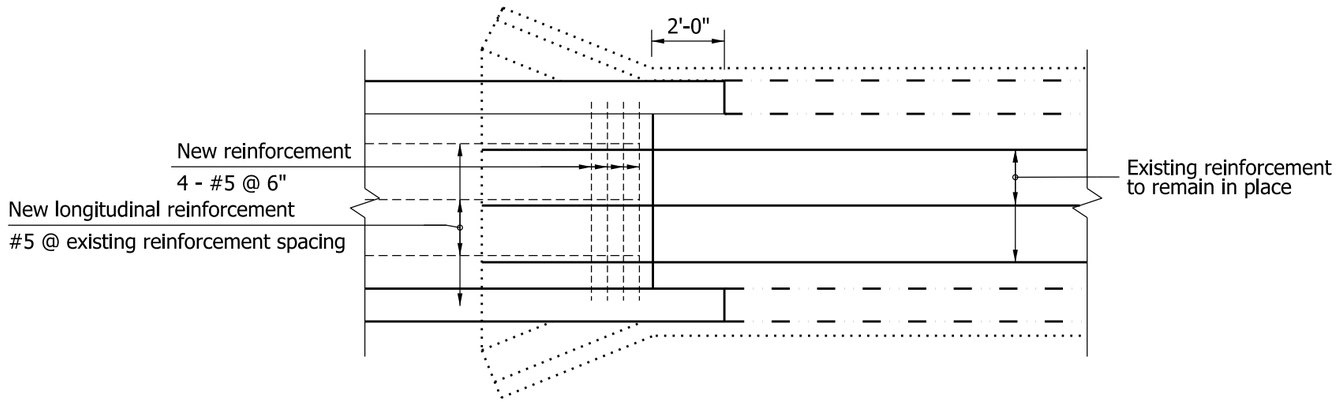

HORIZONTAL SECTION ABOVE FOOTING
FOR SQUARE CULVERTS

INDIANA DEPARTMENT OF TRANSPORTATION

CAST-IN-PLACE BOX-CULVERT EXTENSION

SEPTEMBER 2010

STANDARD DRAWING NO. E 714-BCEX-02

RICHARD L. VanCLEAVE
REGISTERED
No. 9750
STATE OF INDIANA
PROFESSIONAL ENGINEER

DESIGN STANDARDS ENGINEER

/s/ Richard L.VanCleave 09/01/10
DESIGN STANDARDS ENGINEER DATE

/s/ Mark A. Miller 09/01/10
CHIEF HIGHWAY ENGINEER DATE

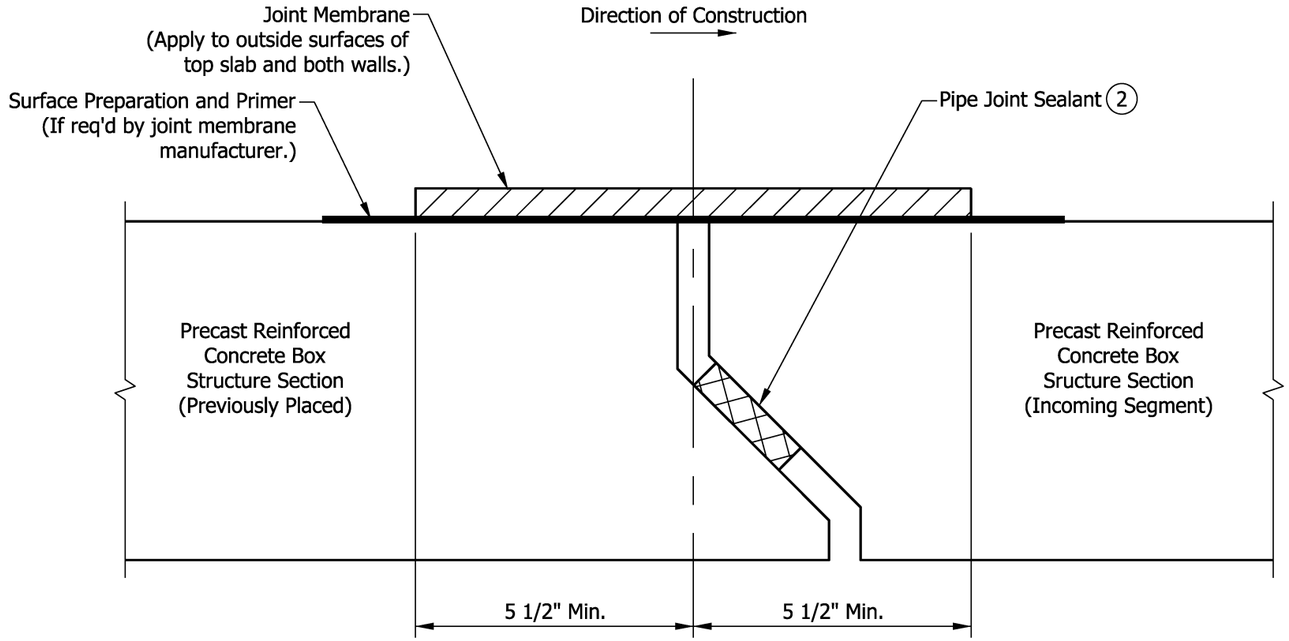

SECTION THROUGH TOP OF BOX STRUCTURE

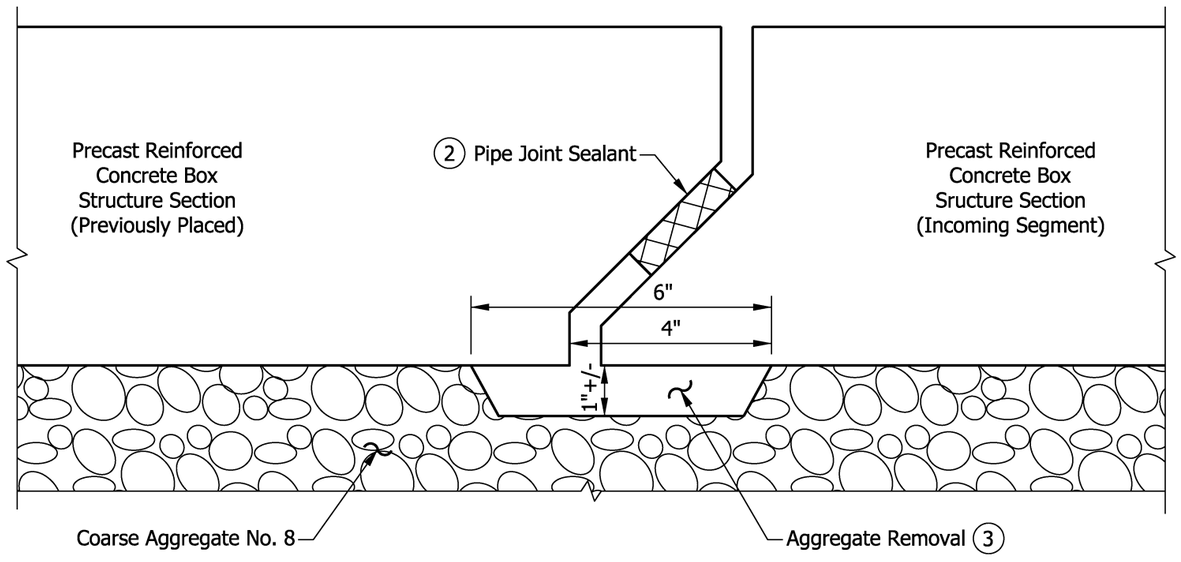

SECTION THROUGH BOTTOM OF BOX STRUCTURE

NOTES:

1. Structure sections shall be brought into firm contact during installation.

(2) Apply to top and side joints of previously placed structure section, and bottom joint of incoming structure section. Quantity shall be per precast manufacturer recommendations.

(3) Aggregate in front of the previously placed structure section shall be removed as shown to prevent plowing the aggregate into the structure section joint during installation of the incoming structure section.

INDIANA DEPARTMENT OF TRANSPORTATION

PRECAST REINFORCED CONCRETE BOX STRUCTURE SECTION JOINT

SEPTEMBER 2023

STANDARD DRAWING NO. E 714-BCJT-01

SUBHI BAZLAMIT REGISTERED No. 12000143 STATE OF INDIANA PROFESSIONAL ENGINEER

Subhi Bazlamit 04/28/2023
DESIGN STANDARDS ENGINEER DATE

05/08/2023
CHIEF ENGINEER DATE

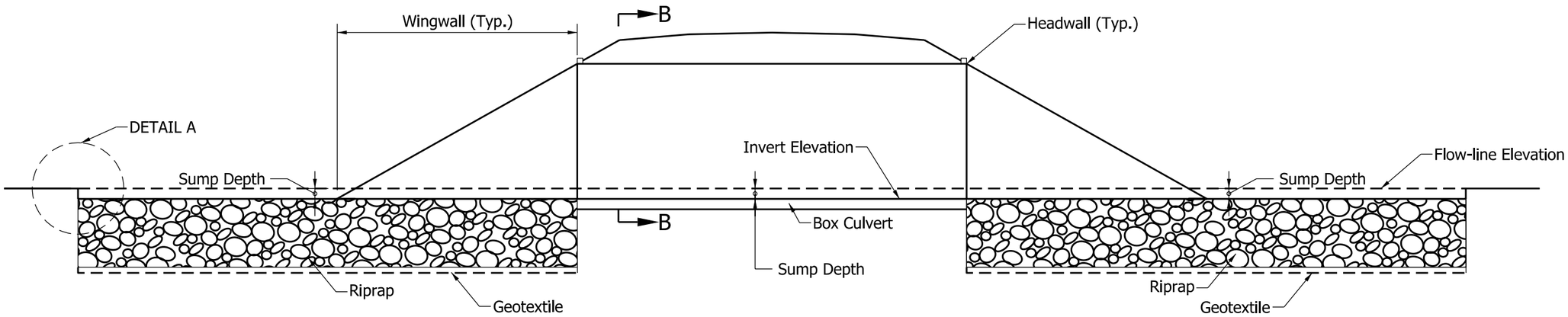

SECTION A-A ELEVATION

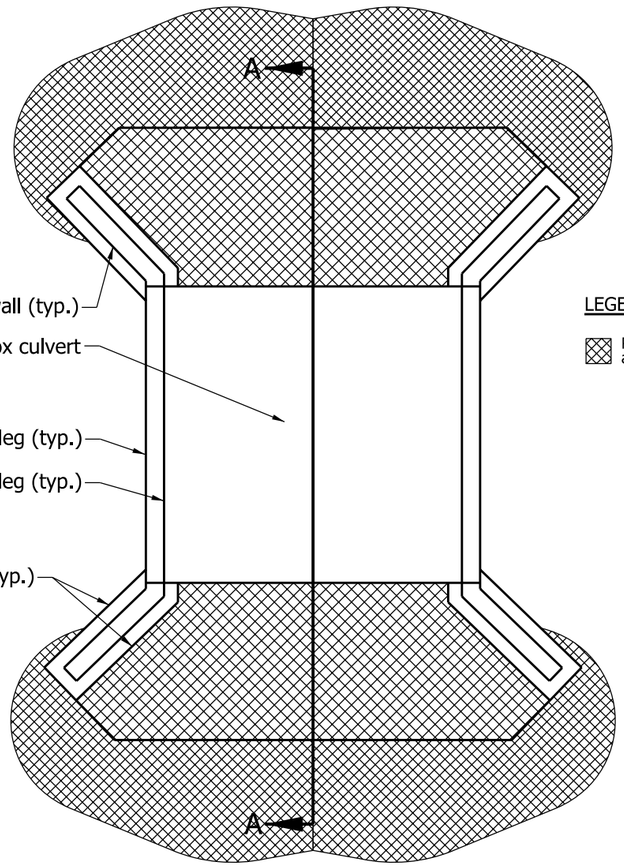

PLAN - WITH WINGWALLS

LEGEND:

Riprap on geotextiles as shown on the plans.

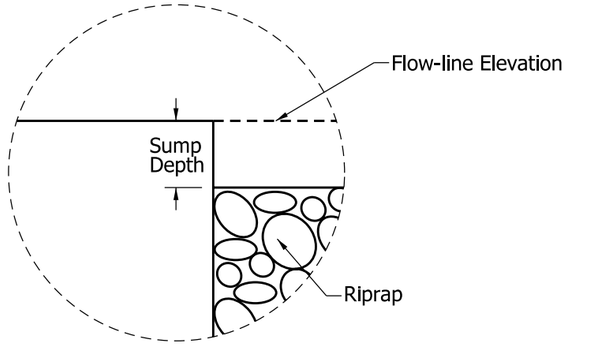

DETAIL A

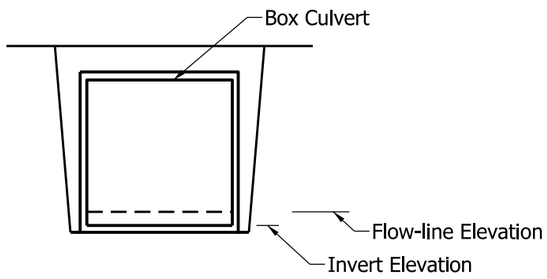

SECTION B-B

INDIANA DEPARTMENT OF TRANSPORTATION

BOX CULVERT SUMPING AND SCOUR PROTECTION

SEPTEMBER 2011

STANDARD DRAWING NO. E 714-BCSP-01

RICHARD L. VanCLEAVE REGISTERED No. 9750 STATE OF INDIANA PROFESSIONAL ENGINEER

DESIGN STANDARDS ENGINEER

/s/ Richard L.VanCleave 09/01/11
DESIGN STANDARDS ENGINEER DATE

/s/ Mark A. Miller 09/01/11
CHIEF HIGHWAY ENGINEER DATE

REINFORCED CONCRETE PIPE									
D	H	R	S	SINGLE PIPE		DOUBLE PIPE		TRIPLE PIPE	
				G	CU.YDS.CONC. 2 ANCHORS	G	CU.YDS.CONC. 2 ANCHORS	G	CU.YDS.CONC. 2 ANCHORS
42"	3'-3	2'-7½"	6'-3	5'-3	2.5	11'-6	5.5	17'-9	8.6
48"	3'-5	2'-11	6'-10	5'-10	2.8	12'-8	6.2	19'-6	9.6
54"	3'-7	3'-2½"	7'-8	6'-5	3.2	14'-1	7.1	21'-9	11.1
60"	3'-9	3'-6	8'-6	7'-0	3.5	15'-6	8.0	24'-0	12.5
66"	3'-11	3'-9½"	9'-4	7'-7	3.9	16'-11	9.0	26'-3	14.1
72"	4'-1	4'-1	10'-2	8'-2	4.3	18'-4	10.0	28'-6	15.7
78"	4'-3	4'-4½"	11'-0	8'-9	4.7	19'-9	11.0	30'-9	17.3
84"	4'-5	4'-8	11'-10	9'-4	5.1	21'-2	12.1	33'-0	19.0
90"	4'-7	4'-11½"	12'-8	9'-11	5.5	22'-7	13.2	35'-3	20.8
96"	4'-9	5'-3	13'-6	10'-6	6.0	24'-0	14.3	37'-6	22.7
102"	4'-11	5'-6½"	14'-1	11'-1	6.4	25'-2	15.3	39'-3	24.2
108"	5'-1	5'-10	14'-8	11'-8	6.9	26'-4	16.3	41'-0	25.7
114"	5'-3	6'-1½"	15'-3	12'-3	7.4	27'-6	17.3	42'-9	27.3
120"	5'-5	6'-5	15'-10	12'-10	7.8	28'-8	18.4	44'-6	28.9
126"	5'-7	6'-8½"	16'-5	13'-5	8.3	29'-10	19.4	46'-3	30.5
132"	5'-9	7'-0	17'-0	14'-0	8.8	31'-0	20.5	48'-0	32.2
138"	5'-11	7'-3½"	17'-7	14'-7	9.4	32'-2	21.6	49'-9	33.9
144"	6'-1	7'-7	18'-2	15'-2	9.9	33'-4	22.8	51'-6	35.6

CORRUGATED ALUMINUM ALLOY OR STEEL PIPE									
D	H	R	S	SINGLE PIPE		DOUBLE PIPE		TRIPLE PIPE	
				G	CU.YDS.CONC. 2 ANCHORS	G	CU.YDS.CONC. 2 ANCHORS	G	CU.YDS.CONC. 2 ANCHORS
42"	2'-11	2'-4	5'-8	4'-8	2.1	10'-4	4.7	16'-0	7.3
48"	3'-1	2'-7	6'-2	5'-2	2.4	11'-4	5.3	17'-6	8.2
54"	3'-3	2'-10	6'-11	5'-8	2.7	12'-7	6.1	19'-6	9.5
60"	3'-4	3'-1	7'-8	6'-2	3.0	13'-10	6.7	21'-6	10.5
66"	3'-5	3'-4	8'-5	6'-8	3.2	15'-1	7.5	23'-6	11.6
72"	3'-7	3'-7	9'-2	7'-2	3.6	16'-4	8.3	25'-6	13.0
78"	3'-9	3'-10	9'-11	7'-8	3.9	17'-7	9.1	27'-6	14.4
84"	3'-10	4'-1	10'-8	8'-2	4.2	18'-10	9.9	29'-6	15.6
90"	3'-11	4'-4	11'-5	8'-8	4.5	20'-1	10.7	31'-6	16.8
96"	4'-1	4'-7	12'-2	9'-2	4.8	21'-4	11.6	33'-6	18.4
102"	4'-2	4'-10	12'-8	9'-8	5.1	22'-4	12.2	35'-0	19.3
108"	4'-4	5'-1	13'-2	10'-2	5.5	23'-4	13.0	36'-6	20.6
114"	4'-5	5'-4	13'-8	10'-8	5.8	24'-4	13.7	38'-0	21.6
120"	4'-7	5'-7	14'-2	11'-2	6.2	25'-4	14.6	39'-6	22.9
126"	4'-8	5'-10	14'-8	11'-8	6.5	26'-4	15.2	41'-0	23.9
132"	4'-10	6'-1	15'-2	12'-2	6.9	27'-4	16.1	42'-6	25.3
138"	4'-11	6'-4	15'-8	12'-8	7.3	28'-4	16.8	44'-0	26.4
144"	5'-1	6'-7	16'-2	13'-2	7.7	29'-4	17.8	45'-6	27.8

GENERAL NOTES

1. Refer to Standard Drawings E 715-SPCA-01 and E 715-SPCA-02 for single pipe anchor details.
2. Refer to Standard Drawings E 715-MPCA-01 and E 715-MPCA-02 for multiple pipe anchor details.

LEGEND

D – Pipe diameter
H – Anchor height
R – Dimension from anchor edge to ℄ of pipe
S – Dimension between ℄ of adjacent pipes
G – Overall anchor length

INDIANA DEPARTMENT OF TRANSPORTATION

CONCRETE ANCHOR TABLE

JANUARY 1998

STANDARD DRAWING NO. E 715-ANCH-01

ANTHONY L. UREMOVICH REGISTERED No. 18095 STATE OF INDIANA PROFESSIONAL ENGINEER

DESIGN STANDARDS ENGINEER

DETAILS PLACED IN THIS FORMAT 11-15-99

/s/ Anthony L. Uremovich 11-15-99
DESIGN STANDARDS ENGINEER DATE

/s/ Firooz Zandi 11-15-99
CHIEF HIGHWAY ENGINEER DATE

ORIGINALLY APPROVED 1-02-98

REINFORCED CONCRETE HORIZONTAL ELLIPTICAL PIPE

SPAN	RISE	H	R	S	SINGLE PIPE		DOUBLE PIPE		TRIPLE PIPE	
					G	CU.YDS.CONC., 2 ANCHORS	G	CU.YDS.CONC., 2 ANCHORS	G	CU.YDS.CONC., 2 ANCHORS
45"	29"	3'-0	2'-9	6'-6	5'-6	2.5	12'-0	5.5	18'-6	8.5
49"	32"	3'-1	2'-11½	6'-11	5'-11	2.7	12'-10	5.9	19'-9	9.2
53"	34"	3'-2	3'-1½	7'-6	6'-3	2.9	13'-9	6.4	21'-3	10.0
60"	38"	3'-3	3'-5½	8'-5	6'-11	3.2	13'-4	7.3	23'-9	11.3
68"	43"	3'-5	3'-10	9'-6	7'-8	3.6	17'-2	8.3	26'-8	13.0
76"	48"	3'-7	4'-2½	10'-7	8'-5	4.1	19'-0	9.4	29'-7	14.8
83"	53"	3'-8	4'-6½	11'-7	9'-1	4.5	20'-8	10.5	32'-3	16.5
91"	58"	3'-10	4'-11	12'-8	9'-10	4.9	22'-6	11.7	35'-2	18.4
98"	63"	4'-0	5'-3	13'-6	10'-6	5.3	24'-0	12.7	37'-6	20.1
106"	68"	4'-2	5'-7½	14'-3	11'-3	5.8	25'-6	13.7	39'-9	21.7
113"	72"	4'-3	5'-11½	14'-11	11'-11	6.2	26'-10	14.6	41'-9	23.0
121"	77"	4'-5	6'-4	15'-8	12'-8	6.7	28'-4	15.7	44'-0	24.6
128"	82"	4'-6	6'-8	16'-4	13'-4	7.2	29'-8	16.6	46'-0	26.1
136"	87"	4'-8	7'-0	17'-0	14'-0	7.6	31'-0	17.6	48'-0	27.6
143"	92"	4'-10	7'-4	17'-8	14'-8	8.1	32'-4	18.7	50'-0	29.2
151"	97"	5'-0	7'-8½	18'-5	15'-5	8.7	33'-10	19.9	52'-3	31.0
166"	106"	5'-3	8'-5	19'-10	16'-10	9.7	36'-8	22.0	56'-6	34.4
180"	116"	5'-6	9'-1	21'-2	18'-2	10.8	39'-4	24.3	60'-6	37.8

CORRUGATED ALUMINUM ALLOY OR STEEL PIPE-ARCH

SPAN	RISE	H	R	S	SINGLE PIPE		DOUBLE PIPE		TRIPLE PIPE	
					G	CU.YDS.CONC., 2 ANCHORS	G	CU.YDS.CONC., 2 ANCHORS	G	CU.YDS.CONC., 2 ANCHORS
49"	33"	3'-0	2'-7	6'-3	5'-2	2.2	11'-5	4.9	17'-8	7.7
57"	38"	3'-1	2'-11	7'-3	5'-10	2.5	13'-1	5.7	20'-4	8.9
64"	43"	3'-3	3'-2½	8'-1	6'-5	2.8	14'-6	6.4	22'-7	10.1
71"	47"	3'-4	3'-6	9'-0	7'-0	3.0	16'-0	7.2	25'-0	11.3
77"	52"	3'-6	3'-9	9'-9	7'-6	3.3	17'-3	7.9	27'-0	12.5
83"	57"	3'-8	4'-0	10'-6	8'-0	3.5	18'-6	8.6	29'-0	13.6
60"	46"	3'-9	3'-1	7'-8	6'-2	2.9	13'-10	6.7	21'-6	10.5
66"	51"	3'-10	3'-4	8'-5	6'-8	3.1	15'-1	7.4	23'-6	11.6
73"	55"	4'-0	3'-7½	9'-4	7'-3	3.4	16'-7	8.3	25'-11	13.1
81"	59"	4'-2	3'-11½	10'-4	7'-11	3.7	18'-3	9.1	28'-7	14.5
87"	63"	4'-2	4'-2½	11'-1	8'-5	4.0	19'-6	9.8	30'-7	15.6
95"	67"	4'-4	4'-6½	12'-1	9'-1	4.3	21'-2	10.8	33'-3	17.2
103"	71"	4'-6	4'-10½	12'-9	9'-9	4.7	22'-6	11.6	35'-3	18.5
112"	75"	4'-8	5'-3	13'-6	10'-6	5.1	24'-0	12.5	37'-6	19.8
117"	79"	4'-9	5-5½	13'-11	10'-11	5.3	24'-10	12.9	38'-9	20.6
128"	83"	5'-0	5-11	14'-10	11'-10	5.8	26'-8	14.1	41'-6	22.4
137"	87"	5'-2	6'-3	15'-7	12'-7	6.1	28'-1	14.8	43'-8	23.5
142"	91"	5'-4	6'-6	16'-0	13'-0	6.5	29'-0	15.7	45'-0	24.9

GENERAL NOTES

1. Refer to Standard Drawings E 715-SPCA-01 and E 715-SPCA-02 for single anchor details.
2. Refer to Standard Drawing E 715-MPCA-02 for multiple anchor details.

LEGEND

H - Anchor height
R - Dimension from anchor edge to ℄ exterior pipe
S - Dimension between ℄ of adjacent pipes
G - Overall anchor length

INDIANA DEPARTMENT OF TRANSPORTATION

CONCRETE ANCHOR TABLES

JANUARY 1998

STANDARD DRAWING NO. E 715-ANCH-02

ANTHONY L. UREMOVICH REGISTERED No. 18095 STATE OF INDIANA PROFESSIONAL ENGINEER

DESIGN STANDARDS ENGINEER

DETAILS PLACED IN THIS FORMAT 11-15-99

/s/ Anthony L. Uremovich 11-15-99
DESIGN STANDARDS ENGINEER DATE

/s/ Firooz Zandi 11-15-99
CHIEF HIGHWAY ENGINEER DATE

ORIGINALLY APPROVED 1-02-98

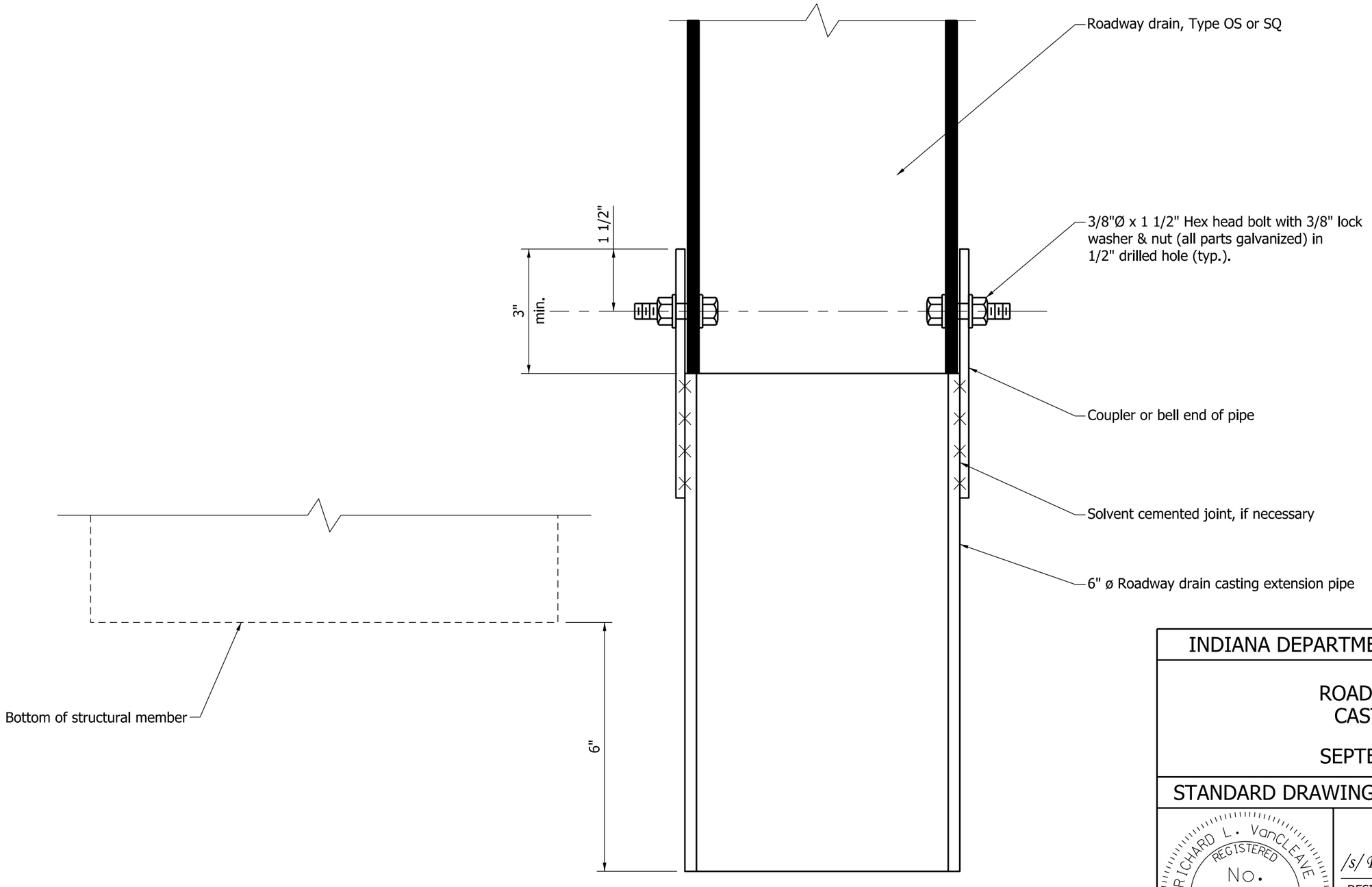

Note: Pipe support brackets not shown for clarity.

INDIANA DEPARTMENT OF TRANSPORTATION

ROADWAY DRAIN
CASTING PIPE

SEPTEMBER 2011

STANDARD DRAWING NO. E 715-BDCG-01

RICHARD L. VanCLEAVE
REGISTERED
No. 9750
STATE OF INDIANA
PROFESSIONAL ENGINEER

DESIGN STANDARDS ENGINEER

/s/ Richard L. VanCleave 09/01/11
DESIGN STANDARDS ENGINEER DATE

/s/ Mark A. Miller 09/01/11
CHIEF HIGHWAY ENGINEER DATE

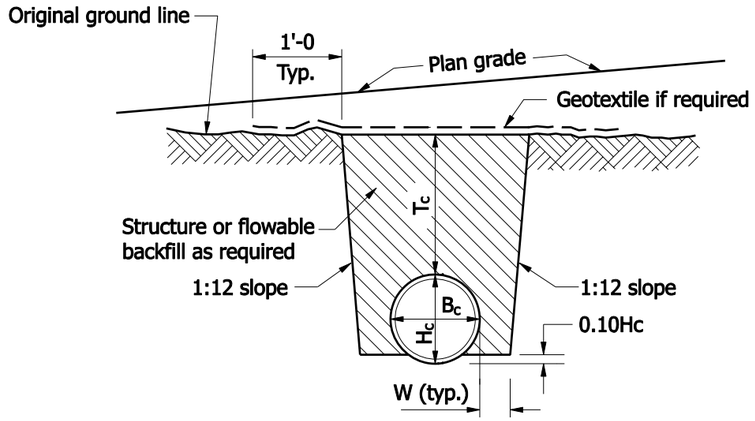

SECTION A-A

LEGEND

H_c = Overall diameter or rise (typ.)

B_c = Overall diameter or span

A = 8" min. for fill height less than 16'
= 12" min. for fill height of 16' or more

T_c = Trench cover depth over pipe

W = 0.3 B_c or 9", whichever is greater

E = Encasement

L_B = Backfill length measured from toe to toe of the 2:1 slopes.

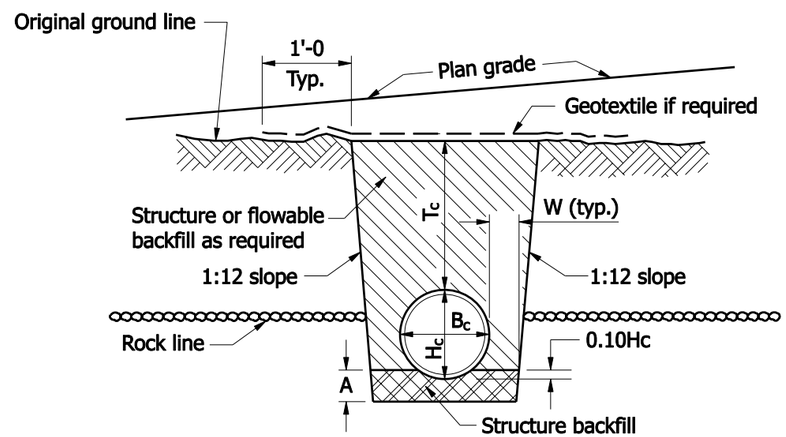

SECTION A-A
ROCK FOUNDATION

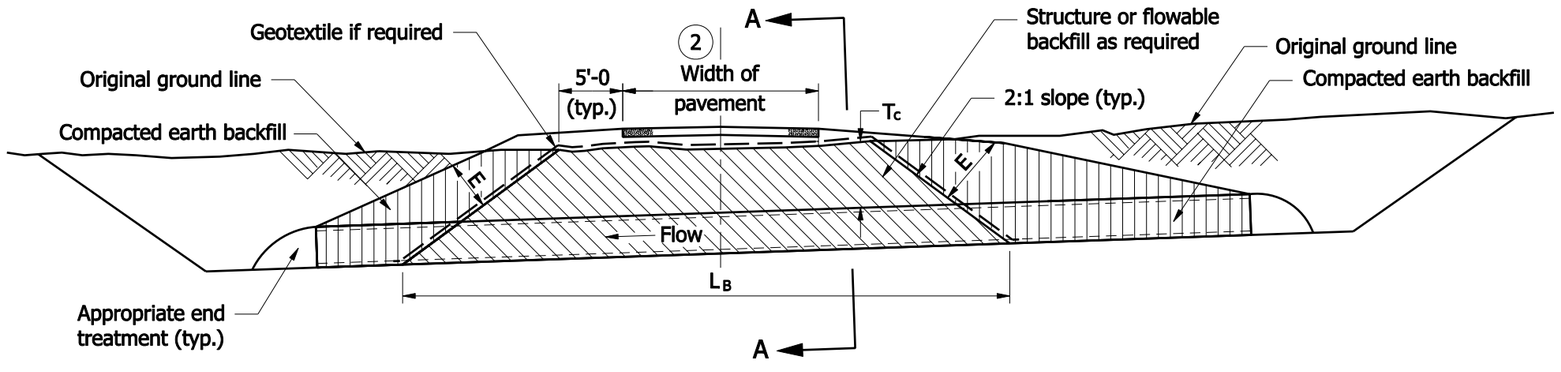

ELEVATION

NOTES :

1. Protective cover shall be constructed prior to running heavy equipment over installed pipes. The minimum covers are listed below:
   a.) 1.5' for $B_c \leq 18"$
   b.) 3' for $18" < B_c \leq 54"$
   c.) 4' for $B_c > 54"$
2. For backfill purposes, paved shoulders, curbs, and sidewalks are considered pavement. See Standard Drawing E 715-BKFL-10 for pavement limits when curbs, paved shoulders, or sidewalks are present.
3. Flowable or structure backfill shall be encased by compacted earth backfill. The minimum encasement shall be 2 ft. If necessary, the 2:1 slope between the flowable or structure backfill and the encasement shall be modified to maintain the minimum 2 ft encasement.

INDIANA DEPARTMENT OF TRANSPORTATION

PIPE BACKFILL METHOD 1
NEW ROADWAY, TRENCH

SEPTEMBER 2008

STANDARD DRAWING NO. E 715-BKFL-01

RICHARD L. VanCLEAVE
REGISTERED
No. 9750
STATE OF INDIANA
PROFESSIONAL ENGINEER

DESIGN STANDARDS ENGINEER

/s/ Richard L. VanCleave 09/02/08
DESIGN STANDARDS ENGINEER — DATE

/s/ Mark A. Miller 09/02/08
CHIEF HIGHWAY ENGINEER — DATE

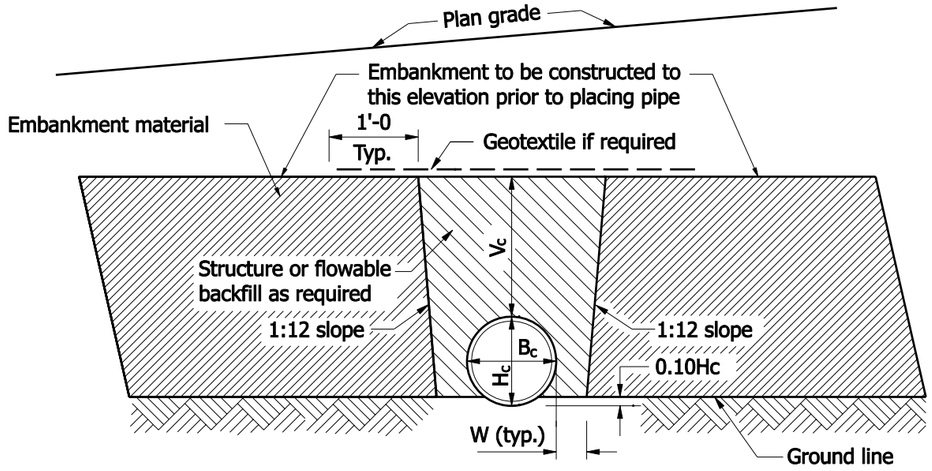

SECTION B-B

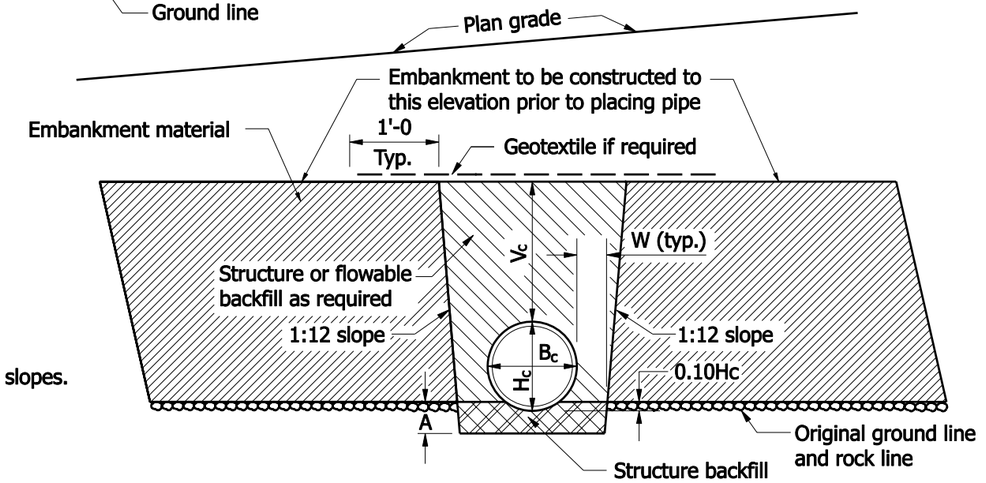

SECTION B-B
ROCK FOUNDATION

LEGEND

H_c = Overall diameter or rise (typ.)

B_c = Overall diameter or span

A = 8" min. for fill height less than 16'
= 12" min. for fill height of 16' or more

V_c = 12" for $B_c \leq 18$"
18" for $B_c > 18$"

W = 0.3 B_c or 9", whichever is greater

L_B = Backfill length measured from toe to toe of the 2:1 slopes.

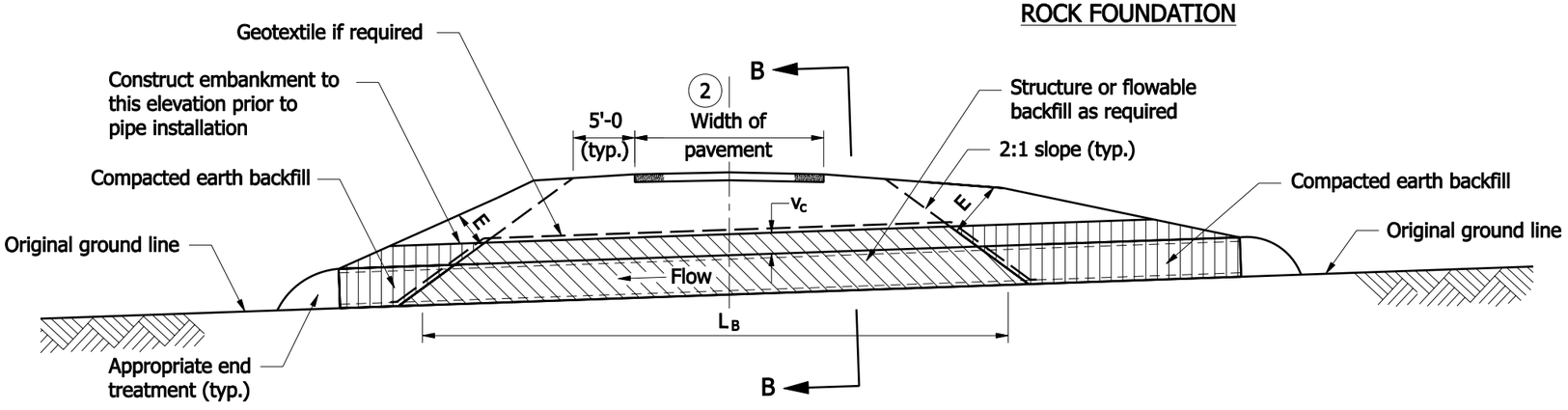

ELEVATION

NOTES :

1. Protective cover shall be constructed prior to running heavy equipment over installed pipes. The minimum covers are listed below:
   a.) 1.5' for $B_c \leq 18$"
   b.) 3' for 18" < $B_c \leq 54$"
   c.) 4' for $B_c > 54$"
2. For backfill purposes, paved shoulders, curbs, and sidewalks are considered pavement. See Standard Drawing E 715-BKFL-10 for pavement limits when curbs, paved shoulders, or sidewalks are present.
3. Flowable or structure backfill shall be encased by compacted earth backfill. The minimum encasement shall be 2 ft. If necessary, the 2:1 slope between the flowable or structure backfill and the encasement shall be modified to maintain the minimum 2 ft encasement.

INDIANA DEPARTMENT OF TRANSPORTATION

PIPE BACKFILL METHOD 1
NEW ROADWAY, EMBANKMENT

SEPTEMBER 2008

STANDARD DRAWING NO. E 715-BKFL-02

RICHARD L. VanCLEAVE REGISTERED No. 9750 STATE OF INDIANA PROFESSIONAL ENGINEER

DESIGN STANDARDS ENGINEER

/s/ Richard L. VanCleave 09/02/08
DESIGN STANDARDS ENGINEER DATE

/s/ Mark A. Miller 09/02/08
CHIEF HIGHWAY ENGINEER DATE

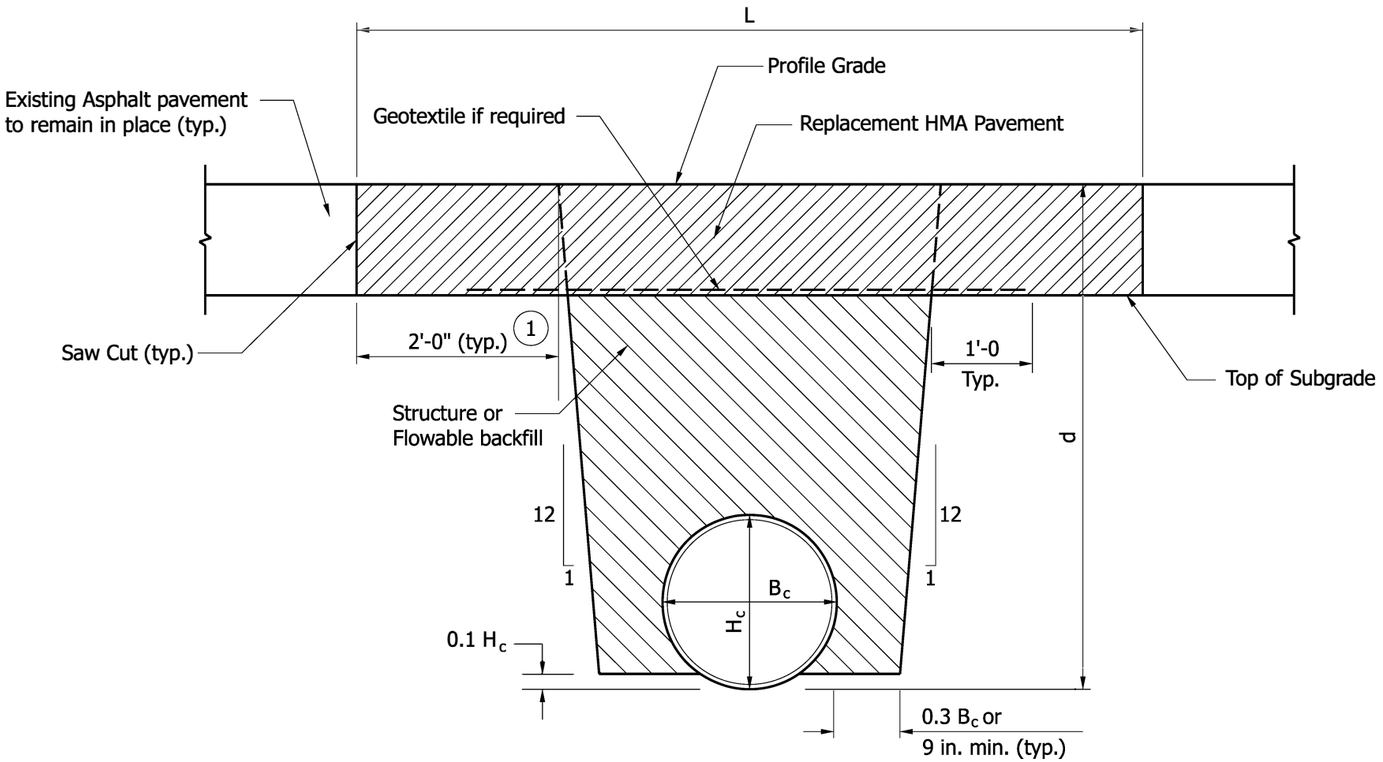

L = Pay limits of pavement removal and pavement replacement (ft); for cross pipe, measured along roadway centerline; for pipe parallel to roadway centerline, measured prependicular to pipe centerline.

B_C = Overall diameter or span (in.)

H_C = Overall diameter or rise (in.)

d = Vertical distance from flowline to profile grade (ft)

ASPHALT REPLACEMENT PAVEMENT

NOTES :

1. Existing subgrade over this distance shall remain in place.
2. The minimum pavement sections shall be as follows:
   HMA: 165 #/syd HMA Surface, Type A,B,C or D on
   variable HMA Intermediate, Type A, B, C or D
3. If underdrains are present, they shall be perpetuated in accordance with the details shown on Standard Drawing E 718-UNDR-01.
4. See Standard Drawing E 715-BKFL-01 for pipe backfill trench elevation view.

INDIANA DEPARTMENT OF TRANSPORTATION

PIPE BACKFILL METHOD 1
EXISTING ROADWAY, TRENCH

SEPTEMBER 2008

STANDARD DRAWING NO. E 715-BKFL-03

RICHARD L. VanCLEAVE
REGISTERED
No. 9750
STATE OF INDIANA
PROFESSIONAL ENGINEER

DESIGN STANDARDS ENGINEER

/s/ Richard L. VanCleave 09/02/08
DESIGN STANDARDS ENGINEER DATE

/s/ Mark A. Miller 09/02/08
CHIEF HIGHWAY ENGINEER DATE

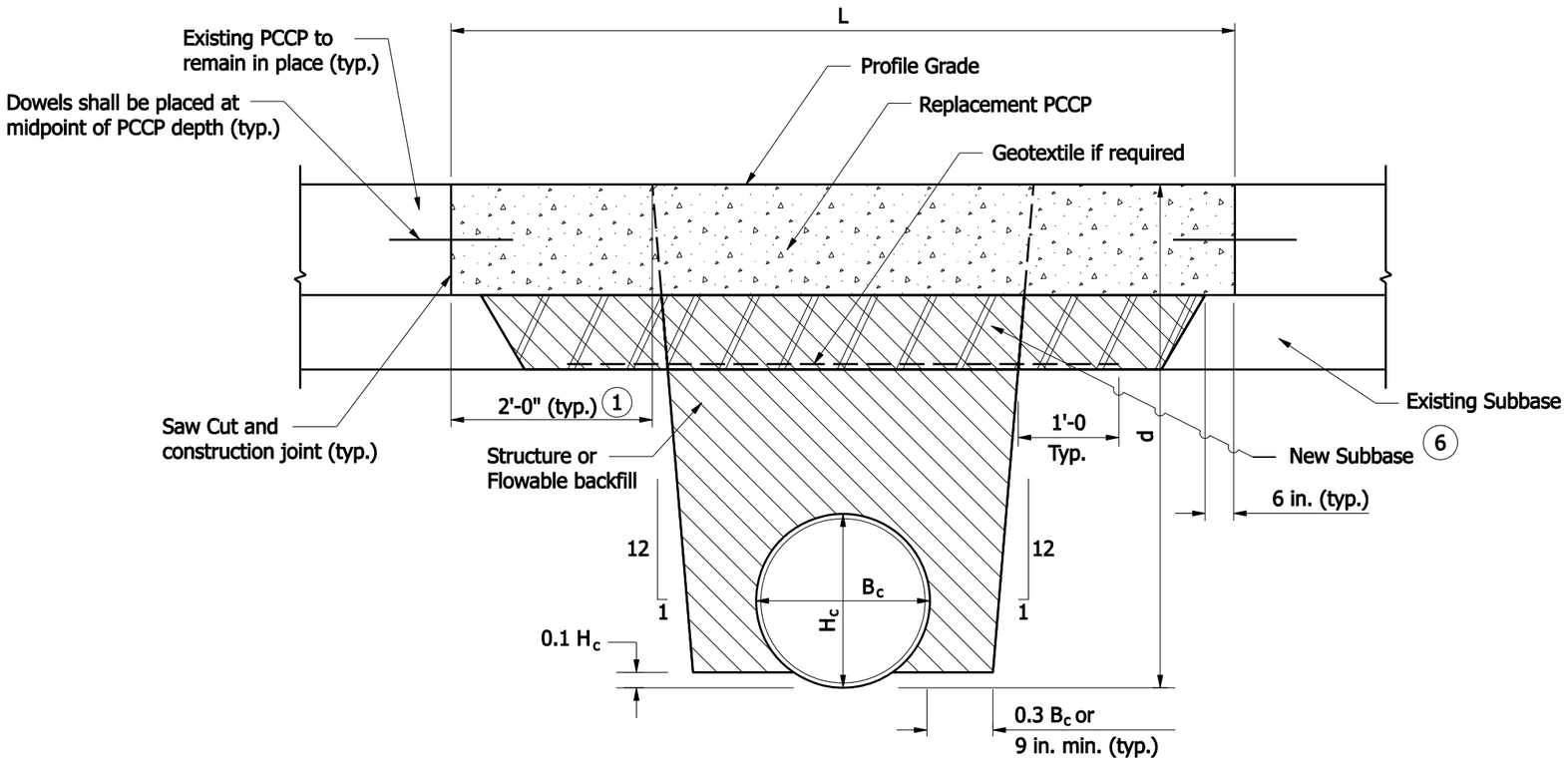

L = Pay limits of pavement removal and pavement replacement (ft); for cross pipe, measured along roadway centerline; for pipe parallel to roadway centerline, measured prependicular to pipe centerline.

B_C = Overall diameter or span (in.)

H_C = Overall diameter or rise (in.)

d = Vertical distance from flowline to profile grade (ft)

PCCP REPLACEMENT PAVEMENT

NOTES :

1. Existing subgrade over this longitudinal distance shall remain in place.
2. The thickness of the replacement PCCP shall match that of the existing concrete pavement.
3. See Standard Drawing series 506-CCPP for concrete patching details.
4. If underdrains are present, they shall be perpetuated in accordance with the details shown on Standard Drawing E 718-UNDR-01.
5. See Standard Drawing E 715-BKFL-01 for pipe backfill trench elevation view.
6. New subbase type shall match the existing subbase type and thickness.

INDIANA DEPARTMENT OF TRANSPORTATION

PIPE BACKFILL METHOD 1
EXISTING ROADWAY, TRENCH

SEPTEMBER 2008

STANDARD DRAWING NO. E 715-BKFL-04

RICHARD L. VanCLEAVE REGISTERED No. 9750 STATE OF INDIANA PROFESSIONAL ENGINEER

DESIGN STANDARDS ENGINEER

/s/ Richard L. VanCleave 09/02/08
DESIGN STANDARDS ENGINEER DATE

/s/ Mark A. Miller 09/02/08
CHIEF HIGHWAY ENGINEER DATE

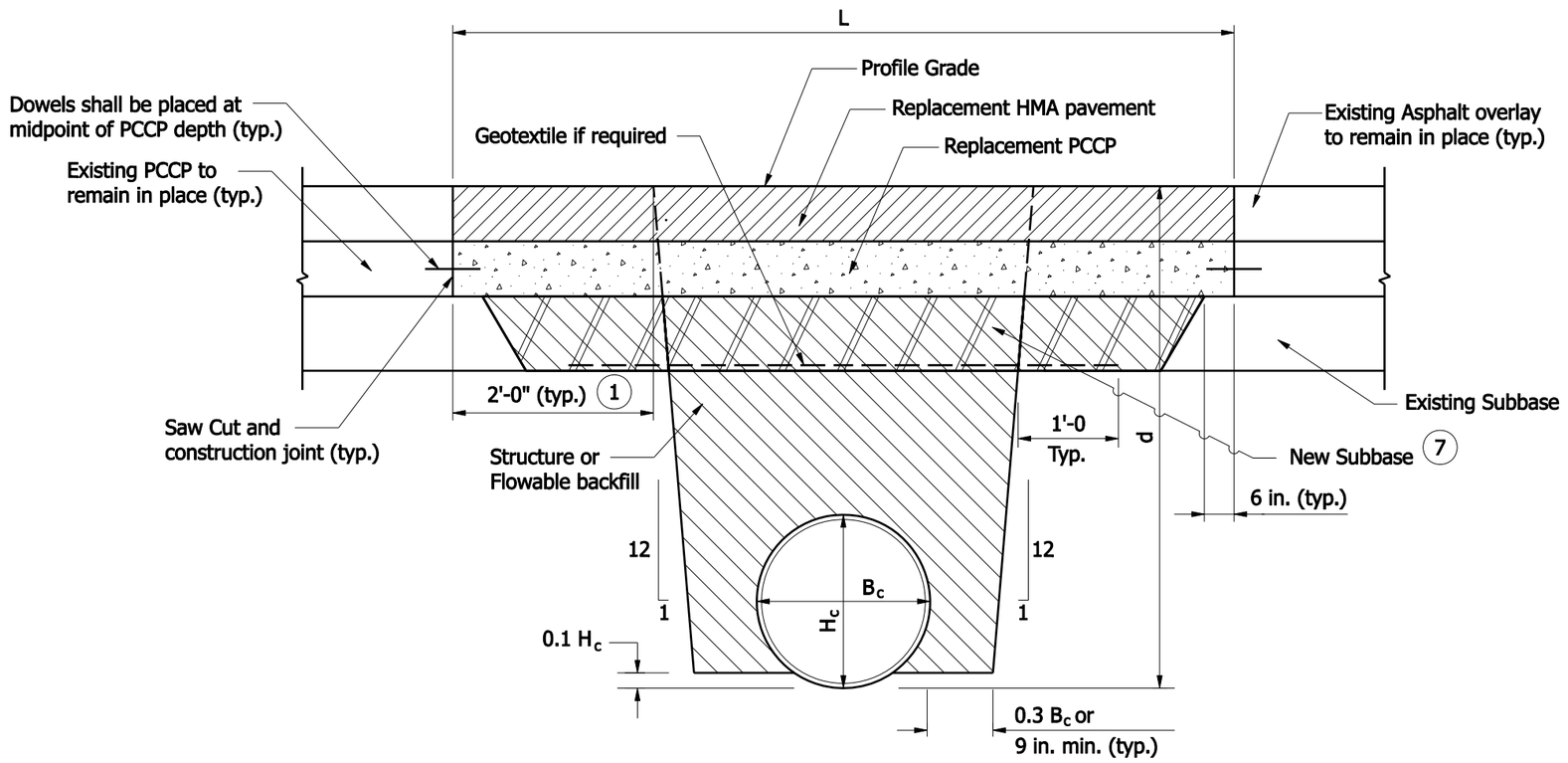

L = Pay limits of pavement removal and pavement replacement (ft); for cross pipe, measured along roadway centerline; for pipe parallel to roadway centerline, measured prependicular to pipe centerline.

B_C = Overall diameter or span (in.)

H_C = Overall diameter or rise (in.)

d = Vertical distance from flowline to profile grade (ft)

COMPOSITE REPLACEMENT PAVEMENT

NOTES :

1. Existing subgrade over this distance shall remain in place.
2. The thickness of the replacement PCCP shall match that of the existing concrete pavement.
3. The minimum pavement sections shall be as follows:
   HMA: 165 #/syd HMA Surface, Type A,B,C or D on
   variable HMA Intermediate, Type A, B, C or D
4. See Standard Drawing series 506-CCPP for concrete patching details.
5. If underdrains are present, they shall be perpetuated in accordance with the details shown on Standard Drawing E 718-UNDR-01.
6. See Standard Drawing E 715-BKFL-01 for pipe backfill trench elevation view.
7. New subbase type shall match the existing subbase type and thickness.

INDIANA DEPARTMENT OF TRANSPORTATION

PIPE BACKFILL METHOD 1
EXISTING ROADWAY, TRENCH

SEPTEMBER 2008

STANDARD DRAWING NO. E 715-BKFL-05

RICHARD L. VanCLEAVE REGISTERED No. 9750 STATE OF INDIANA PROFESSIONAL ENGINEER

DESIGN STANDARDS ENGINEER

/s/ Richard L. VanCleave 09/02/08
DESIGN STANDARDS ENGINEER DATE

/s/ Mark A. Miller 09/02/08
CHIEF HIGHWAY ENGINEER DATE

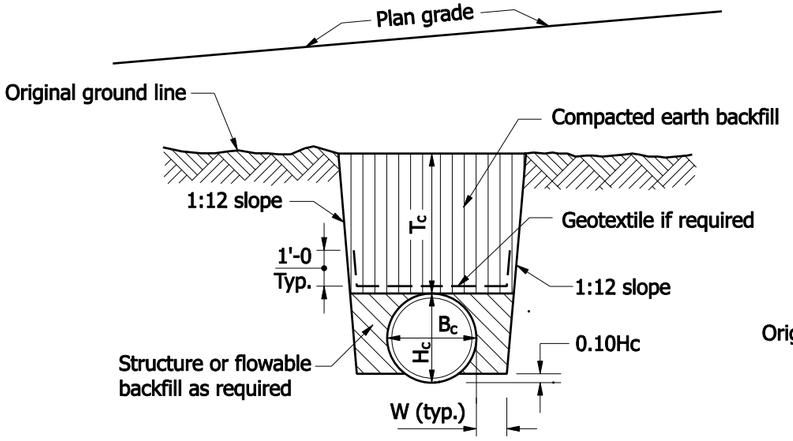

SECTION C-C

LEGEND

- H_c = Overall diameter or rise (typ.)
- B_c = Overall diameter or span
- A = 8" min. for fill height less than 16'
  = 12" min. for fill height of 16' or more
- T_c = Trench cover depth over pipe
- W = 0.3 B_c or 9", whichever is greater
- E = Encasement
- L_B = Backfill length measured from toe to toe of the 2:1 slopes.

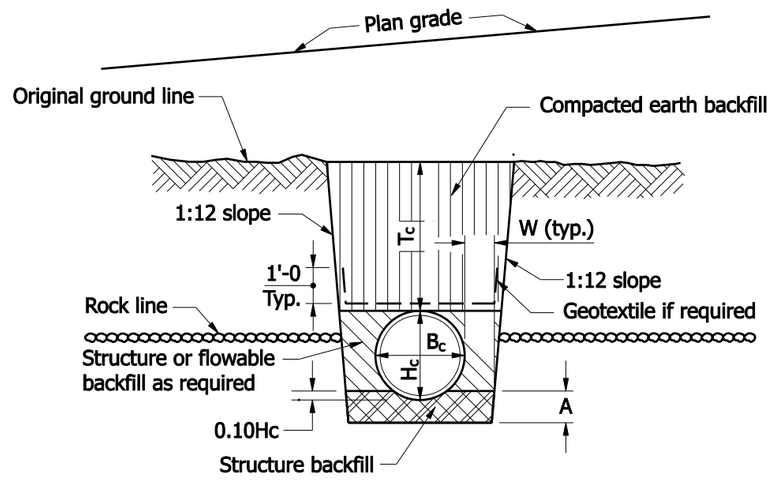

SECTION C-C
ROCK FOUNDATION

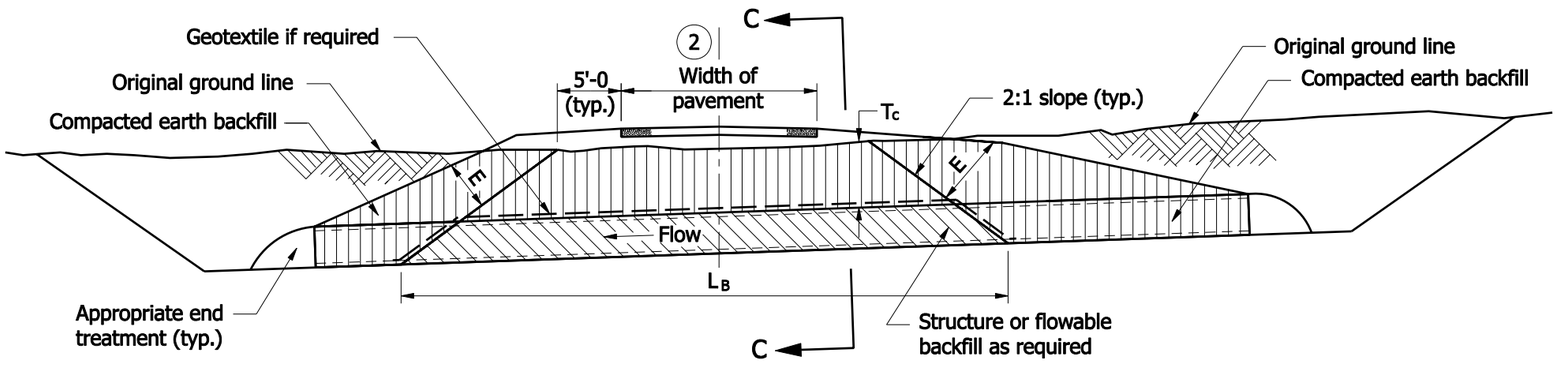

ELEVATION

NOTES :

1. Protective cover shall be constructed prior to running heavy equipment over installed pipes. The minimum covers are listed below:
   a.) 1.5' for $B_c \leq 18"$
   b.) 3' for $18" < B_c \leq 54"$
   c.) 4' for $B_c > 54"$
2. For backfill purposes, paved shoulders, curbs, and sidewalks are considered pavement. See Standard Drawing E 715-BKFL-10 for pavement limits when curbs, paved shoulders, or sidewalks are present.
3. Flowable or structure backfill shall be encased by compacted earth backfill. The minimum encasement shall be 2 ft. If necessary, the 2:1 slope between the flowable or structure backfill and the encasement shall be modified to maintain the minimum 2 ft encasement.

INDIANA DEPARTMENT OF TRANSPORTATION

PIPE BACKFILL METHOD 2
NEW OR EXISTING DRIVE

SEPTEMBER 2008

STANDARD DRAWING NO. E 715-BKFL-06

RICHARD L. VanCLEAVE
REGISTERED
No. 9750
STATE OF INDIANA
PROFESSIONAL ENGINEER

DESIGN STANDARDS ENGINEER

/s/ Richard L. VanCleave 09/02/08
DESIGN STANDARDS ENGINEER — DATE

/s/ Mark A. Miller 09/02/08
CHIEF HIGHWAY ENGINEER — DATE

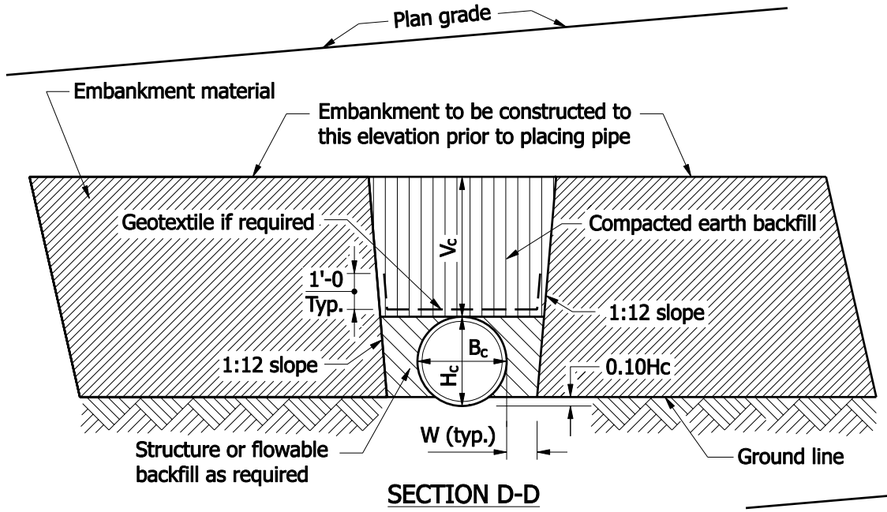

SECTION D-D

LEGEND

H_c = Overall diameter or rise (typ.)

B_c = Overall diameter or span

A = 8" min. for fill height less than 16'
= 12" min. for fill height of 16' or more

V_c = 12" for $B_c \leq 18$"
18" for $B_c > 18$"

W = 0.3 B_c or 9", whichever is greater

E = Encasement

L_B = Backfill length measured from toe to toe of the 2:1 slopes.

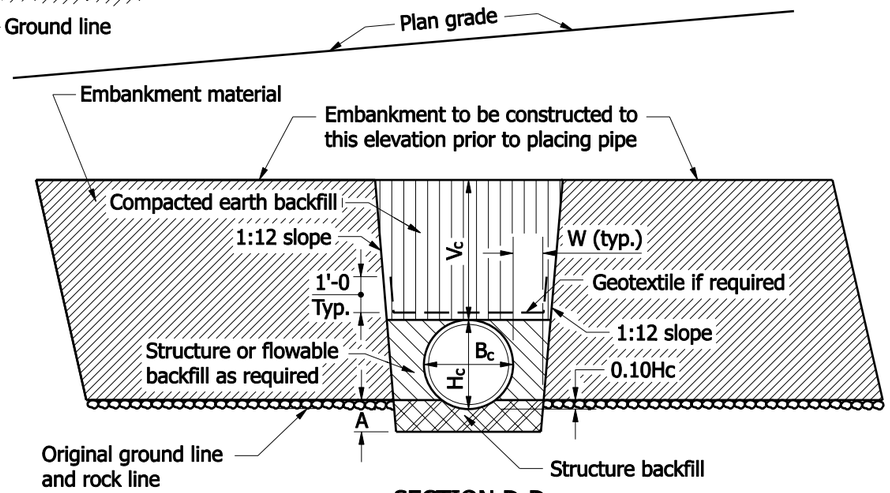

SECTION D-D
ROCK FOUNDATION

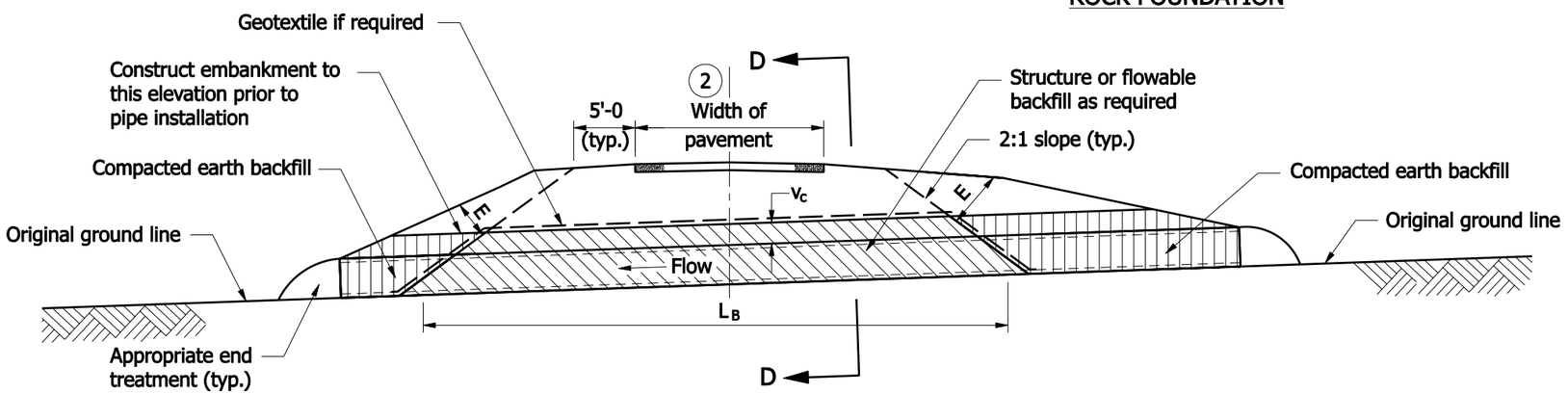

ELEVATION

NOTES :

1. Protective cover shall be constructed prior to running heavy equipment over installed pipes. The minimum covers are listed below:
   a.) 1.5' for $B_c \leq 18$"
   b.) 3' for 18" < $B_c \leq 54$"
   c.) 4' for $B_c > 54$"
2. For backfill purposes, paved shoulders, curbs, and sidewalks are considered pavement. See Standard Drawing E 715-BKFL-10 for pavement limits when curbs, paved shoulders, or sidewalks are present.
3. Flowable or structure backfill shall be encased by compacted earth backfill. The minimum encasement shall be 2 ft. If necessary, the 2:1 slope between the flowable or structure backfill and the encasement shall be modified to maintain the minimum 2 ft encasement.

INDIANA DEPARTMENT OF TRANSPORTATION

PIPE BACKFILL METHOD 2
NEW OR EXISTING DRIVE

SEPTEMBER 2008

STANDARD DRAWING NO. E 715-BKFL-07

RICHARD L. VanCLEAVE REGISTERED No. 9750 STATE OF INDIANA PROFESSIONAL ENGINEER

DESIGN STANDARDS ENGINEER

/s/ Richard L. VanCleave 09/02/08
DESIGN STANDARDS ENGINEER — DATE

/s/ Mark A. Miller 09/02/08
CHIEF HIGHWAY ENGINEER — DATE

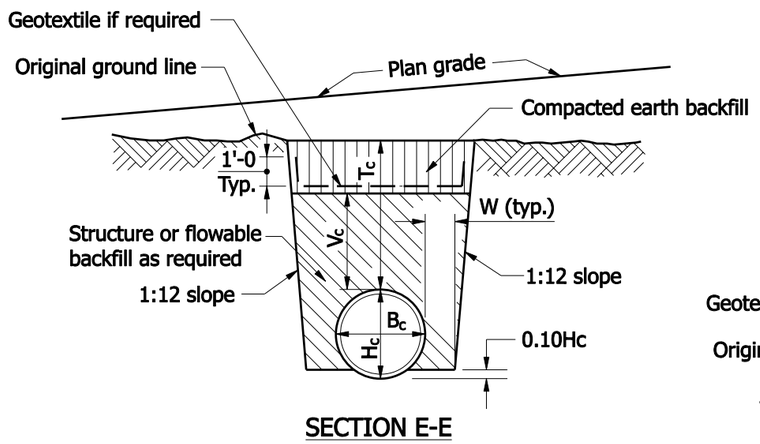

SECTION E-E

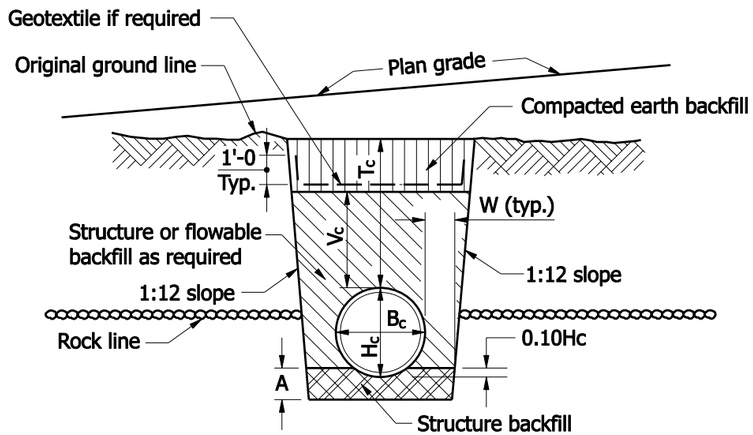

SECTION E-E
ROCK FOUNDATION

LEGEND

H_c = Overall diameter or rise (typ.)

B_c = Overall diameter or span

A = 8" min. for fill height less than 16'
= 12" min. for fill height of 16' or more

V_c = 12" for $B_c \leq 18"$
18" for $B_c > 18"$

T_c = Trench cover depth over pipe

W = 0.3 B_c or 9", whichever is greater

L_B = Backfill length measured from toe to toe of the 2:1 slopes.

NOTES :

1. Protective cover shall be constructed prior to running heavy equipment over installed pipes. The minimum covers are listed below:
   a.) 1.5' for $B_c \leq 18"$
   b.) 3' for $18" < B_c \leq 54"$
   c.) 4' for $B_c > 54"$

(2) For backfill purposes, paved shoulders, curbs, and sidewalks are considered pavement. See Standard Drawing E 715-BKFL-10 for pavement limits when curbs, paved shoulders, or sidewalks are present.

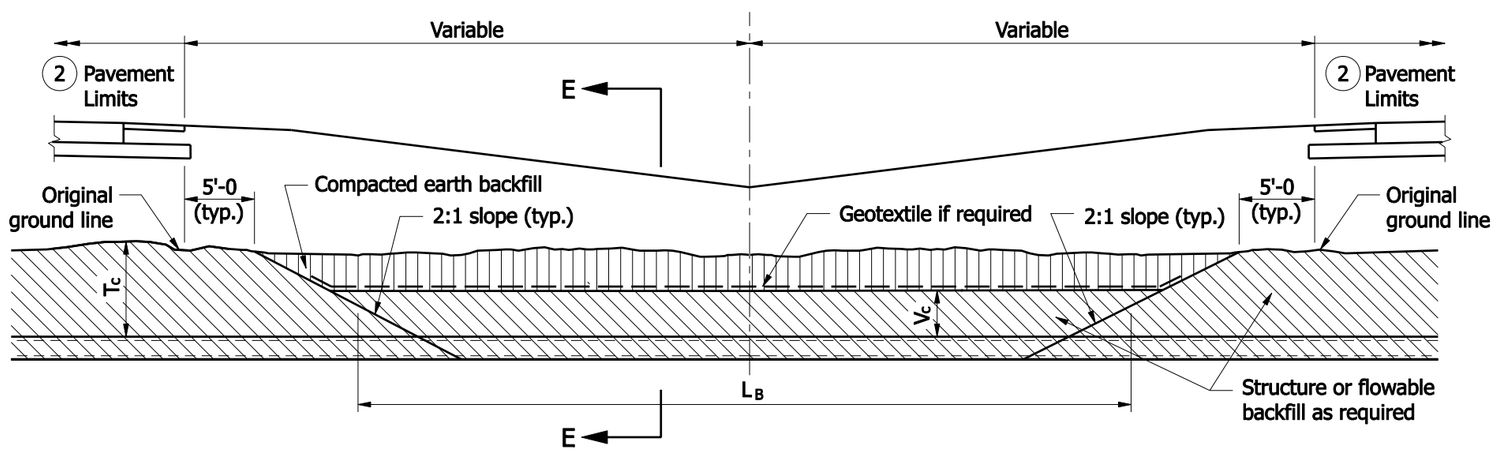

ELEVATION THRU MEDIAN STRIP

INDIANA DEPARTMENT OF TRANSPORTATION

PIPE BACKFILL METHOD 3
MEDIAN INSTALLATION, TRENCH

SEPTEMBER 2008

STANDARD DRAWING NO. E 715-BKFL-08

RICHARD L. VanCLEAVE
REGISTERED
No. 9750
STATE OF INDIANA
PROFESSIONAL ENGINEER

DESIGN STANDARDS ENGINEER

/s/ Richard L. VanCleave 09/02/08
DESIGN STANDARDS ENGINEER — DATE

/s/ Mark A. Miller 09/02/08
CHIEF HIGHWAY ENGINEER — DATE

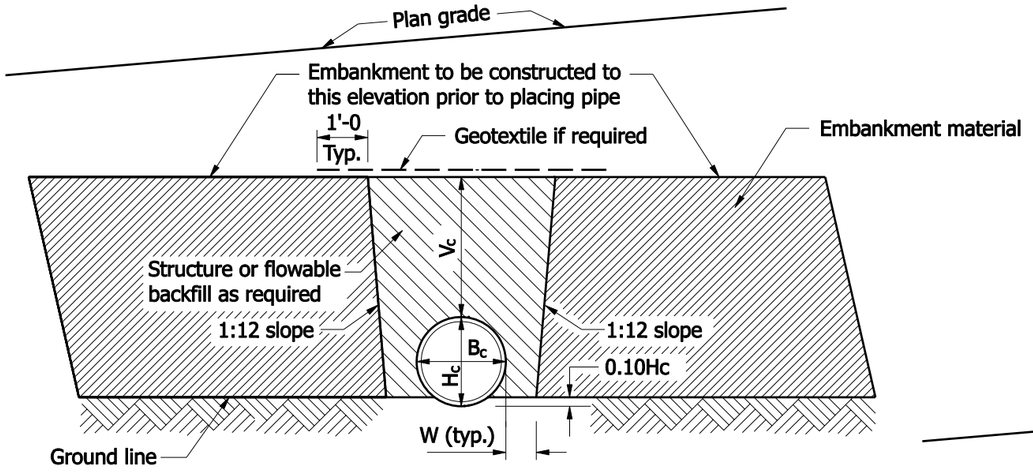

SECTION F-F

NOTES :

1. Protective cover shall be constructed prior to running heavy equipment over installed pipes. The minimum covers are listed below:
   a.) 1.5' for $B_c \leq 18"$
   b.) 3' for $18" < B_c \leq 54"$
   c.) 4' for $B_c > 54"$
2. For backfill purposes, paved shoulders, curbs, and sidewalks are considered pavement. See Standard Drawing E 715-BKFL-10 for pavement limits when curbs, paved shoulders, or sidewalks are present.

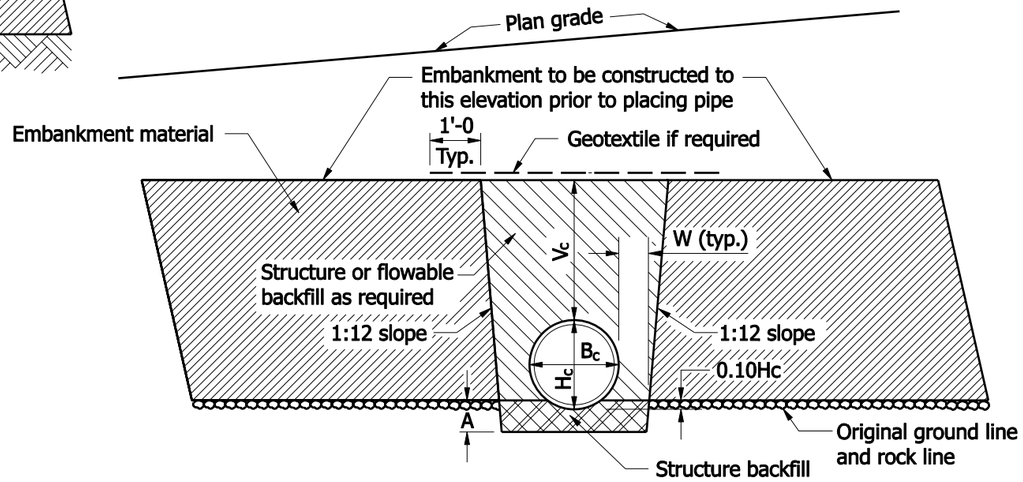

SECTION F-F
ROCK FOUNDATION

LEGEND

H_c = Overall diameter or rise (typ.)
B_c = Overall diameter or span
A = 8" min. for fill height less than 16'
= 12" min. for fill height of 16' or more
V_c = 12" for $B_c \leq 18"$
18" for $B_c > 18"$
W = 0.3 B_c or 9", whichever is greater
L_B = Backfill length measured from toe to toe of the 2:1 slopes.

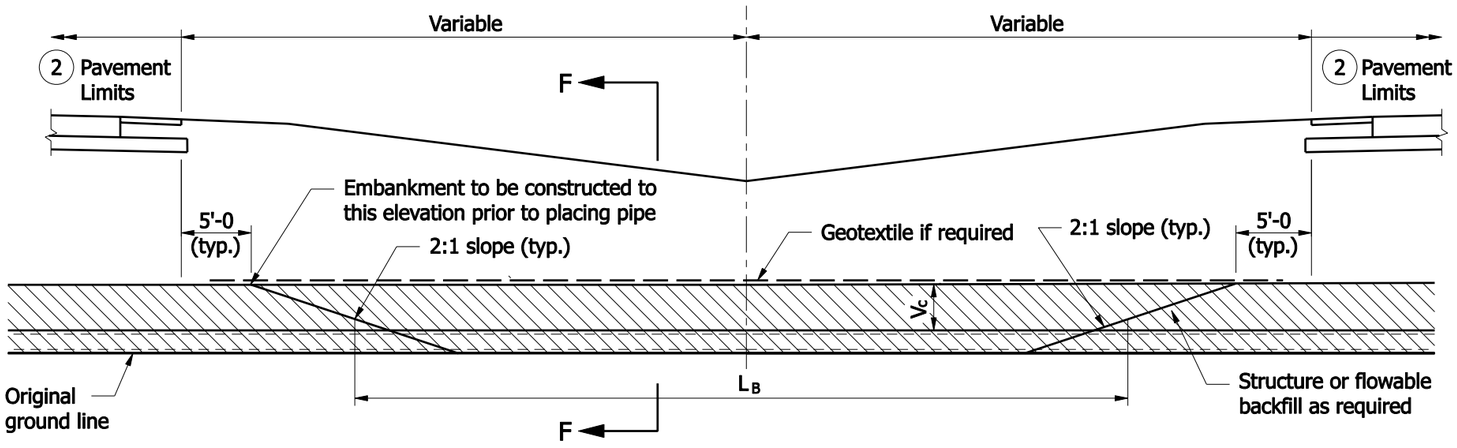

ELEVATION THRU MEDIAN STRIP

INDIANA DEPARTMENT OF TRANSPORTATION

PIPE BACKFILL METHOD 1
MEDIAN INSTALLATION, EMBANKMENT

SEPTEMBER 2008

STANDARD DRAWING NO. E 715-BKFL-09

RICHARD L. VanCLEAVE REGISTERED No. 9750 STATE OF INDIANA PROFESSIONAL ENGINEER

DESIGN STANDARDS ENGINEER

/s/ Richard L. Van Cleave 09/02/08
DESIGN STANDARDS ENGINEER — DATE

/s/ Mark A. Miller 09/02/08
CHIEF HIGHWAY ENGINEER — DATE

LEGEND

- (C) Curb
- (P) Pavement Limits *
- (S) Sidewalk
- (T) Travel Lane
- (U) Utility Strip
- (V) Paved Shoulder

* For backfill placement and computation

EDGE OF TRAVELWAY

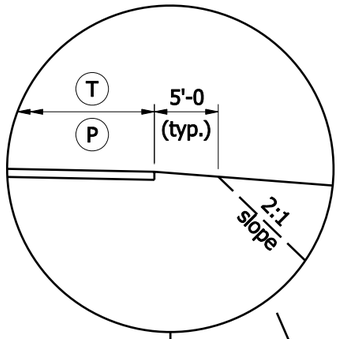

BACK OF CURB

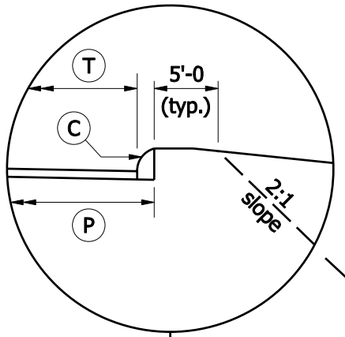

EDGE OF SIDWEWALK
ADJACENT TO CURB

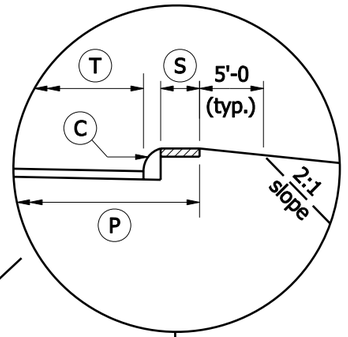

EDGE OF SIDEWALK
ADJACENT TO UTILITY
STRIP

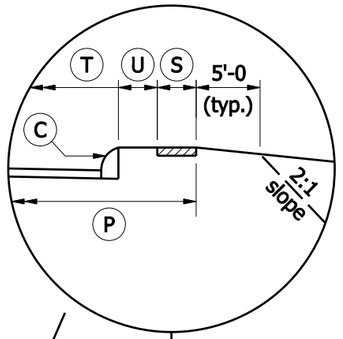

EDGE OF PAVED
SHOULDER

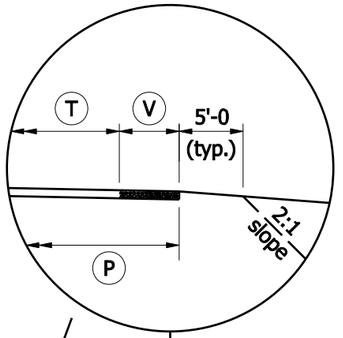

or

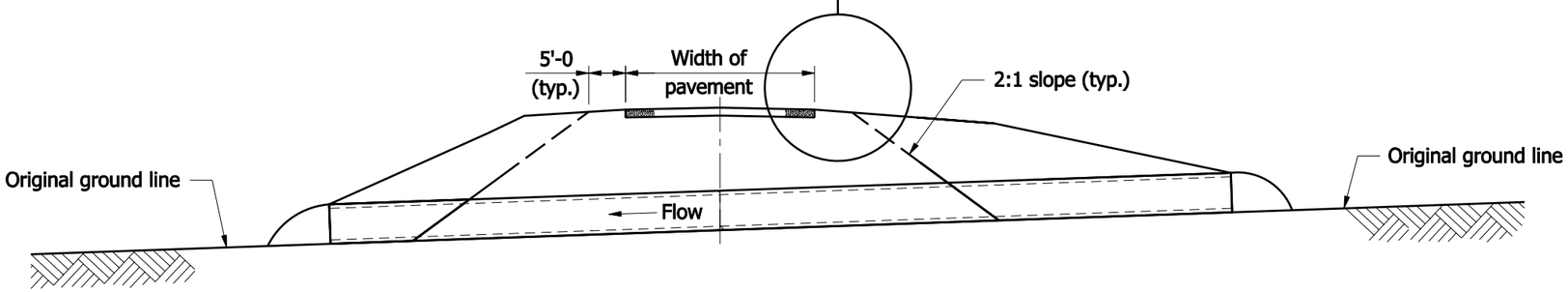

ELEVATION

INDIANA DEPARTMENT OF TRANSPORTATION	
PIPE BACKFILL LIMIT DETERMINATION	
SEPTEMBER 2007	
STANDARD DRAWING NO. E 715-BKFL-10	
RICHARD L. VanCLEAVE REGISTERED No. 9750 STATE OF INDIANA PROFESSIONAL ENGINEER DESIGN STANDARDS ENGINEER	*/s/ Richard L. VanCleave* 09/04/07 DESIGN STANDARDS ENGINEER DATE */s/ Mark A. Miller* 09/04/07 CHIEF HIGHWAY ENGINEER DATE

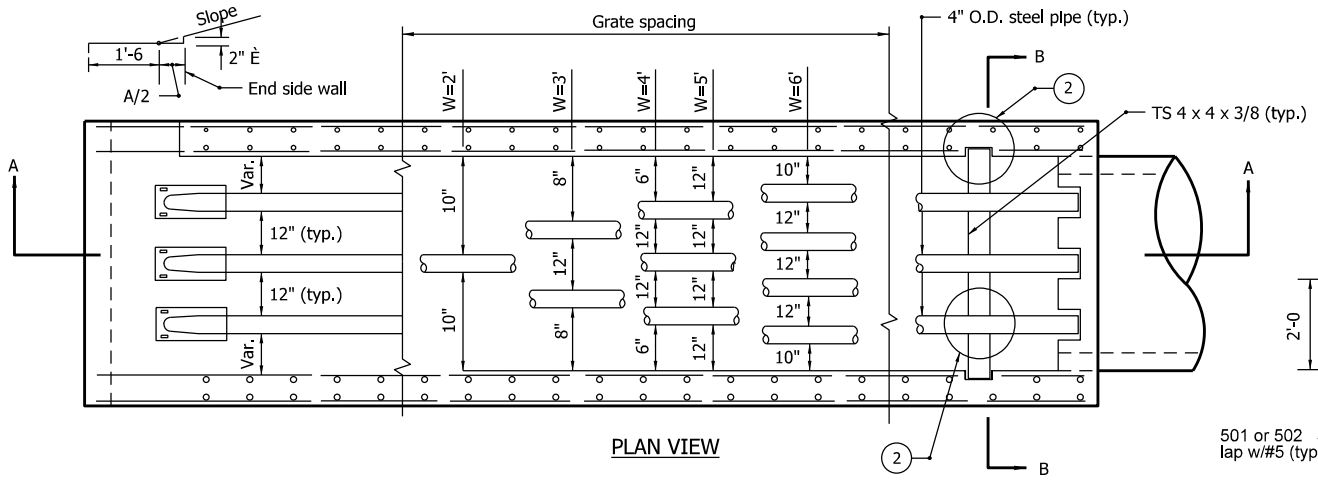

PLAN VIEW

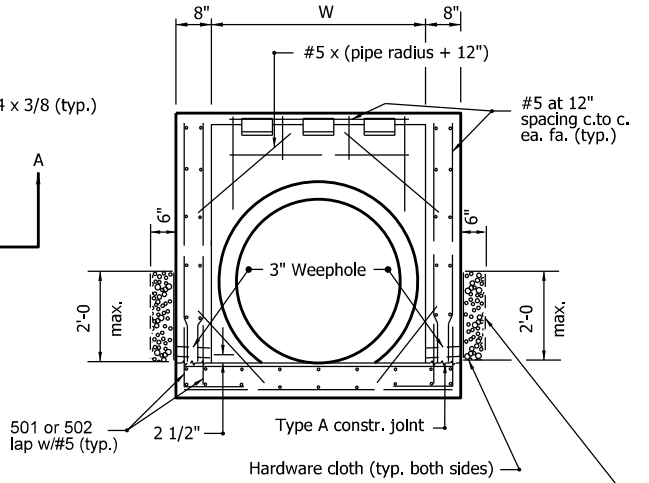

GRATE REMOVED

SECTION B-B

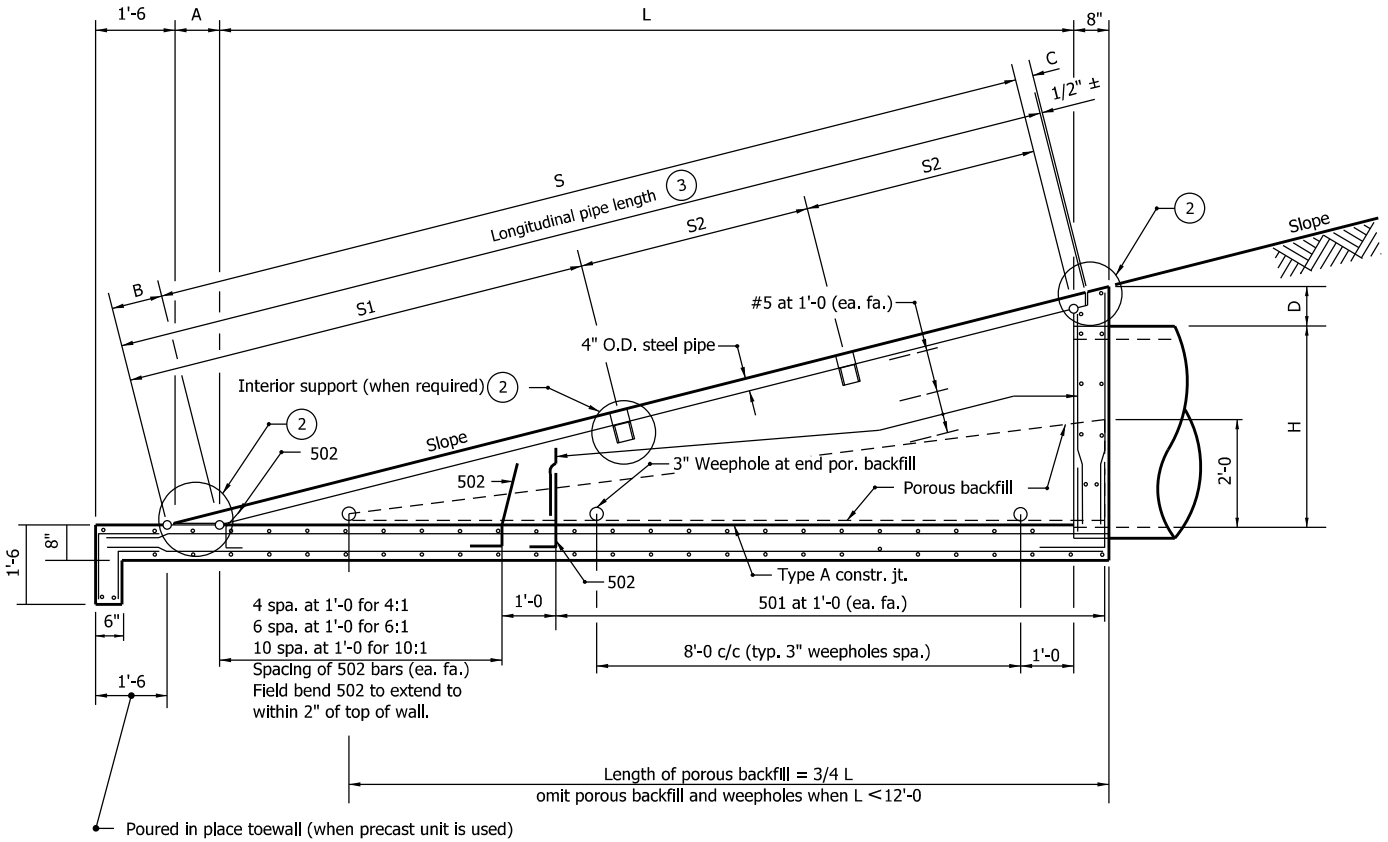

SECTION A-A

GENERAL NOTES

1. The invert grade of the grated box end section shall be the same as that of the pipe.
2. See Standard Drawing E 715-GBTO-04 for Details A, B, C, and D.
3. See Standard Drawings E 715-GBTO-05 through -08 for tables.
4. Type I grated box end section shall be used for mainline cross-culverts, outlet pipes within the clear zone.
5. See Standard Drawing E 715-GBTO-02 for bending diagrams.

INDIANA DEPARTMENT OF TRANSPORTATION

GRATED BOX END SECTION TYPE I

JANUARY 1999

STANDARD DRAWING NO. E 715-GBTO-01

ANTHONY L. UREMOVICH REGISTERED No. 18095 STATE OF INDI NA PROFESSIONAL ENGINEER

DESIGN STANDARDS ENGINEER

DETAILS PLACED IN THIS FORMAT	11-15-99
/s/ Anthony L. Uremovich DESIGN STANDARDS ENGINEER	11-15-99 DATE
/s/ Firooz Zandi CHIEF HIGHWAY ENGINEER	11-15-99 DATE
ORIGINALLY APPROVED	1-04-99

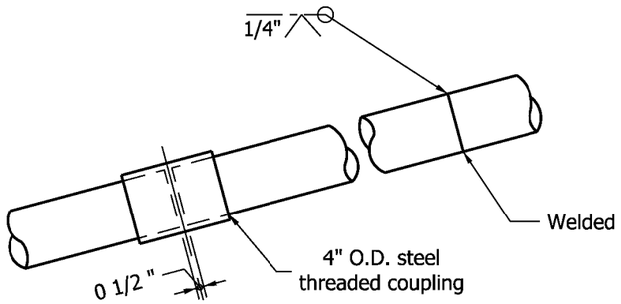

OPTIONAL COUPLING

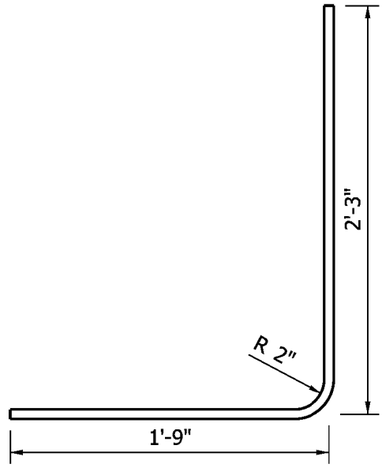

501 x 4'-0"

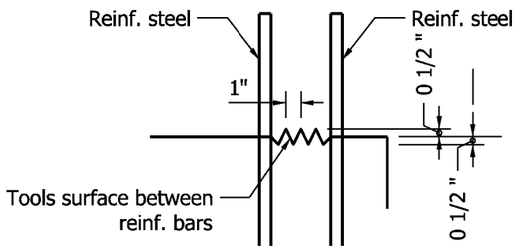

TYPE A CONSTRUCTION JOINT

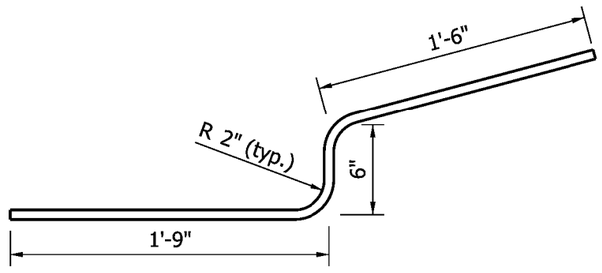

502 x 3'-9"

INDIANA DEPARTMENT OF TRANSPORTATION

GRATED BOX END SECTION
TYPE 1

SEPTEMBER 2009

STANDARD DRAWING NO. E 715-GBTO-02

RICHARD L. VanCLEAVE
REGISTERED
No. 9750
STATE OF INDIANA
PROFESSIONAL ENGINEER

DESIGN STANDARDS ENGINEER

/s/ Richard L. VanCleave *09/01/09*
DESIGN STANDARDS ENGINEER — DATE

/s/ Mark A. Miller *09/01/09*
CHIEF HIGHWAY ENGINEER — DATE

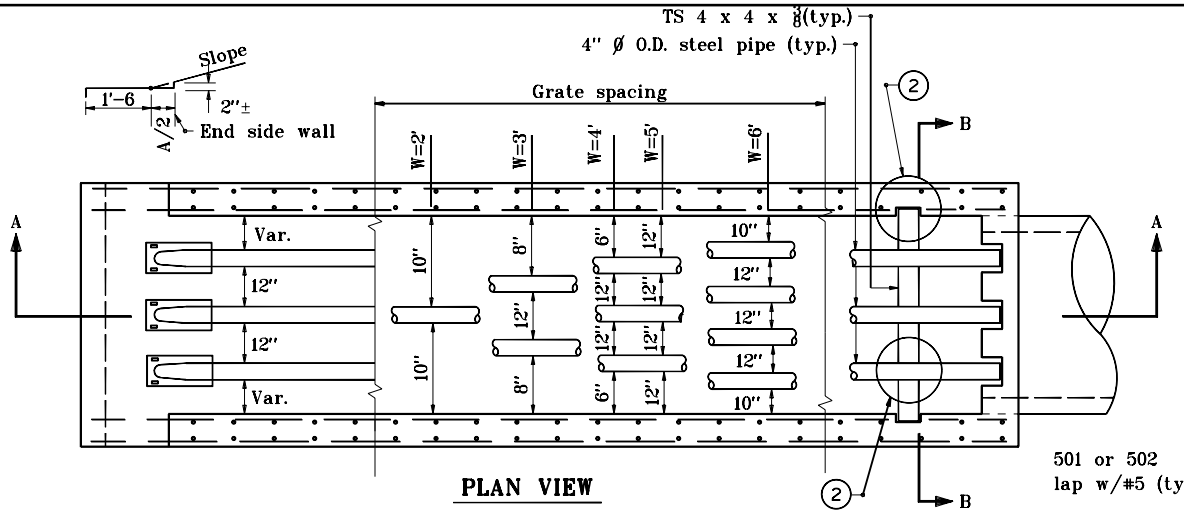

PLAN VIEW

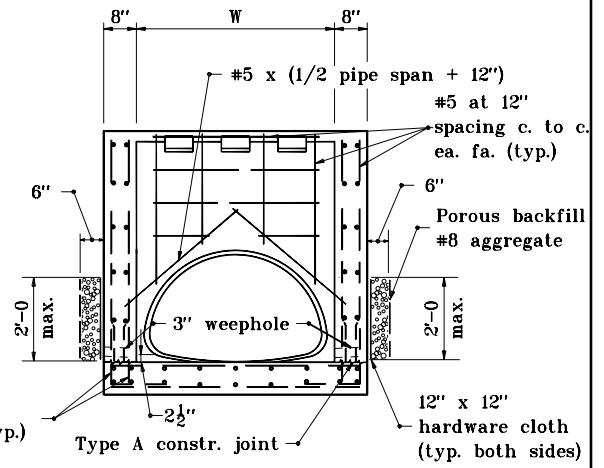

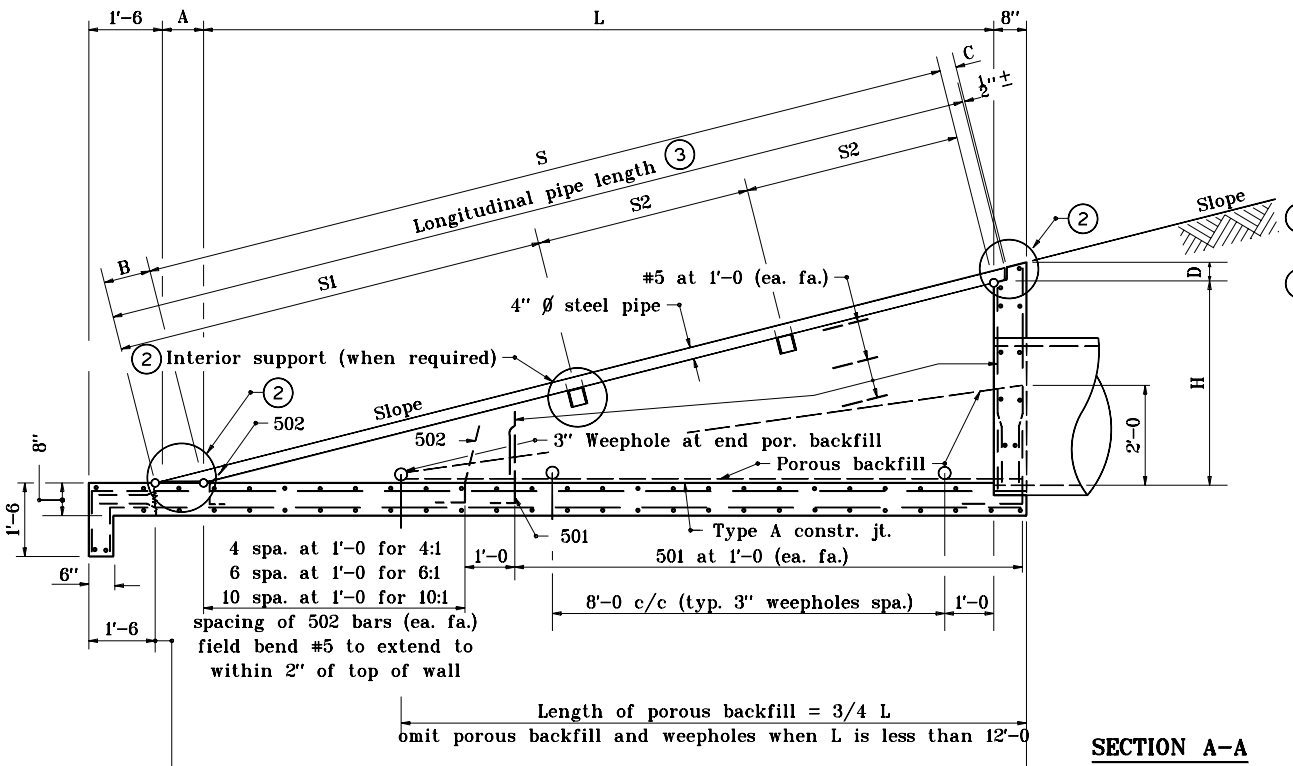

SECTION A-A

GRATE REMOVED
SECTION B-B

GENERAL NOTES

1. The invert grade of the grated box end section shall be the same as that of the pipe.
2. See Standard Drawing E 715-GBTO-04 for Details A, B, C, and D.
3. See Standard Drawings E 715-GBTO-05 through -08 for tables.
4. Type I grated box end sections shall be used for mainline cross-culverts' outlet pipes within the clear zone.
5. See Standard Drawing E 715-GBTO-02 for bending diagrams.

INDIANA DEPARTMENT OF TRANSPORTATION

GRATED BOX END SECTION TYPE I

JANUARY 1999

STANDARD DRAWING NO. E 715-GBTO-03

ANTHONY L. UREMOVICH REGISTERED No. 18095 STATE OF INDIANA PROFESSIONAL ENGINEER

DESIGN STANDARDS ENGINEER

DETAILS PLACED IN THIS FORMAT	11-15-99
/s/ Anthony L. Uremovich, DESIGN STANDARDS ENGINEER	11-15-99
/s/ Firooz Zandi, CHIEF HIGHWAY ENGINEER	11-15-99
ORIGINALLY APPROVED	1-04-99

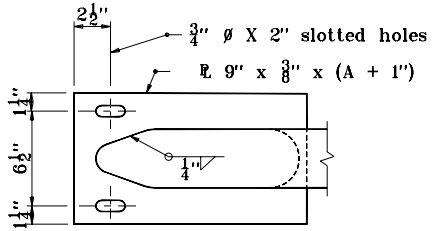

PLAN

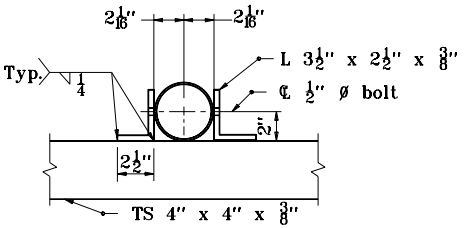

SECTION L–L

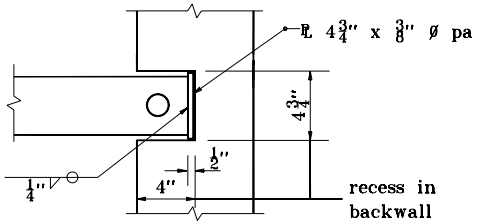

PLAN

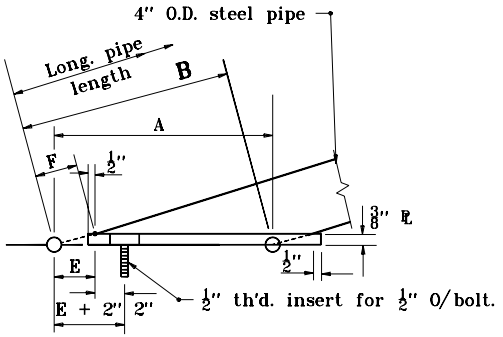

DETAIL A

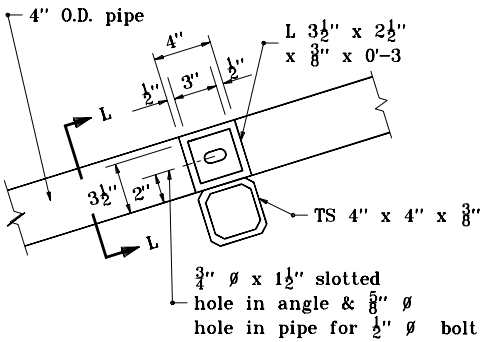

DETAIL B

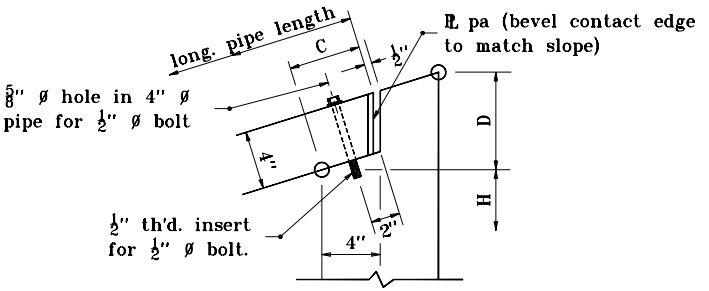

DETAIL C

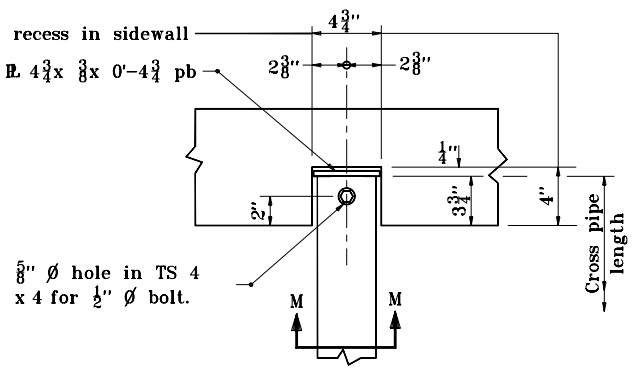

DETAIL D

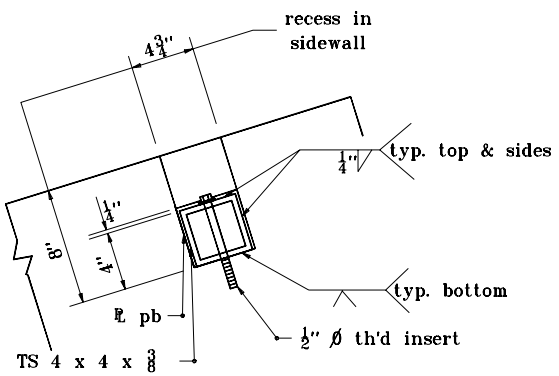

SECTION M–M

INDIANA DEPARTMENT OF TRANSPORTATION

GRATED BOX END SECTION TYPE I

JANUARY 1999

STANDARD DRAWING NO. E 715-GBTO-04

ANTHONY L. UREMOVICH REGISTERED No. 18095 STATE OF INDIANA PROFESSIONAL ENGINEER

DESIGN STANDARDS ENGINEER

DETAILS PLACED IN THIS FORMAT	11-15-99
/s/ Anthony L. Uremovich	11-15-99
DESIGN STANDARDS ENGINEER	DATE
/s/ Firooz Zandi	11-15-99
CHIEF HIGHWAY ENGINEER	DATE
ORIGINALLY APPROVED	1-04-99

2 : 1 SLOPE

CULVERT SIZE	H	L	W	Longitudinal Pipe			Cross Tube			
				S	No.	Length	No.	Length	S1	S2
12	2'–0"	4'–0"	2'–0"	4'–5 5/8"	1	5'–7 5/8"	–	–	5'–1 5/8"	–
15 & 18	2'–6"	5'–0"	2'–0"	5'–7"	1	6'–9"	1	2'–7 1/2"	4'–9 1/8"	1'–6"
21 & 24	3'–0"	6'–0"	3'–0"	6'–8 1/2"	2	7'–10 1/2"	–	–	7'–4 1/2"	–
27 & 30	3'–6"	7'–0"	3'–0"	7'–9 7/8"	2	10'–1 1/4"	–	–	8'–5 7/8"	–
33 & 36	4'–0"	8'–0"	4'–0"	8'–11 3/8"	3	10'–11 3/8"	–	–	9'–7 3/8"	–
42	4'–6"	9'–0"	4'–0"	10'–0 3/4"	3	11'–1 1/4"	–	–	10'–8 3/4"	–
48	5'–0"	10'–0"	5'–0"	11'–2 1/8"	3	12'–4 1/8"	–	–	11"–10 1/8"	–
54	5'–6"	11'–0"	6'–0"	12'–3 3/8"	4	13'–5 1/2"	1	6'–7 1/2"	9'–11 3/8"	3'–0"
60	6'–0"	12'–0"	6'–0"	13'–5"	4	14'–7"	1	6'–7 1/2"	11'–1"	3'–0"

3 : 1 SLOPE

CULVERT SIZE	H	L	W	Longitudinal Pipe			Cross Tube			
				S	No.	Length	No.	Length	S1	S2
12	2'–0"	6'–0"	2'–0"	6'–3 5/8"	1	7'–9"	1	2'–7 1/2"	5'–3 5/8"	2'–0"
15 & 18	2'–6"	7'–6"	2'–0"	7'–10 5/8"	1	9'–3 5/8"	1	2'–7 1/2"	5'–4 5/8"	3'–6"
21 & 24	3'–0"	9'–0"	3'–0"	9'–5 5/8"	2	10'–10 5/8"	1	3'–7 1/2"	6'–11 5/8"	3'–6"
27 & 30	3'–6"	10'–6"	3'–0"	11'–0 3/4"	2	12'–5 1/8"	1	3'–7 1/2"	8'–6 3/4"	3'–6"
33 & 36	4'–0"	12'–0"	4'–0"	12'–7 1/2"	3	14'–0 5/8"	1	4'–7 1/2"	10'–1 1/4"	3'–6"
42	4'–6"	13'–6"	4'–0"	14'–2 3/4"	3	15'–7 3/4"	1	4'–7 1/2"	10'–8 3/4"	4'–6"
48	5'–0"	15'–0"	5'–0"	15'–9 1/2"	3	17'–2 5/8"	1	5'–7 1/2"	12'–3 1/2"	4'–6"
54	5'–6"	16'–6"	6'–0"	17'–4 3/4"	4	18'–9 1/4"	1	6'–7 1/2"	10'–4 3/4"	8'–0"
60	6'–0"	18'–0"	6'–0"	18'–11 3/4"	4	20'–4 1/4"	1	6'–7 1/2"	11'–11 3/4"	8'–0"

4 : 1 SLOPE

CULVERT SIZE	H	L	W	Longitudinal Pipe			Cross Tube			
				S	No.	Length	No.	Length	S1	S2
12	2'–0"	8'–0"	2'–0"	8'–3"	1	9'–11 1/2"	1	2'–7 1/2"	5'–7"	4'–0"
15 &18	2'–6"	10'–0"	2'–0"	10'–3 1/2"	1	12'–0 1/2"	2	2'–7 1/2"	5'–7 1/2"	3'–0"
21 & 24	3'–0"	12'–0"	3'–0"	12'–4 3/8"	2	14'–1"	1	3'–7 1/2"	9'–2 1/2"	4'–6"
27 & 30	3'–6"	14'–0"	3'–0"	14'–5 1/4"	2	16'–1 5/8"	1	3'–7 1/2"	9'–3 1/8"	6'–6"
33 & 36	4'–0"	16'–0"	4'–0"	16'–5 5/8"	3	18'–2 1/2"	1	4'–7 1/2"	11'–3 5/8"	6'–6"
42	4'–6"	18'–0"	4'–0"	18'–6 3/8"	3	20'–3 1/4"	1	4'–7 1/2"	12'–4 3/8"	7'–6"
48	5'–0"	20'–0"	5'–0"	20'–7 3/8"	3	22'–4"	1	5'–7 1/2"	11'–5 3/8"	10'–6"
54	5'–6"	22'–0"	6'–0"	22'–8 1/8"	4	24'–4 3/4"		6'–7 1/2"	12'–6 1/8"	11'–6"
60	6'–0"	24'–0"	6'–0"	24'–8 7/8"	4	26'–5 1/2"	2	6'–7 1/2"	12'–6 7/8"	6'–9"

5 : 1 SLOPE

CULVERT SIZE	H	L	W	Longitudinal Pipe			Cross Tube			
				S	No.	Length	No.	Length	S1	S2
12	2'–0"	10'–0"	2'–0"	10'–2 3/8"	1	12–2 3/4"	2	2'–7 1/2"	6'–2 3/8"	2'–10"
15 & 18	2'–6"	12'–6"	2'–0"	12'–9"	1	14'–9 3/8"	2	2'–7 1/2"	5'–11"	4'–3"
21 & 24	3'–0"	15'–0"	3'–0"	15'–3 1/2"	2	17'–4"	1	3'–7 1/2"	9'–2 1/2"	7'–9"
27 & 30	3'–6"	17'–6"	3'–0"	17'–10 1/2"	2	19'–10 1/2"	2	3'–7 1/2"	9'–6 1/8"	5'–0"
33 & 36	4'–0"	20'–0"	4'–0"	20'–4 1/2"	3	22'–5 1/4"	1	4'–7 1/2"	13'–0 3/4"	9'–0"
42	4'–6"	22'–6"	4'–0"	22'–11 3/8"	3	24'–11 1/4"	1	4'–7 1/2"	13'–1 3/8"	11'–6"
48	5'–0"	25'–0"	5'–0"	25'–6"	3	27'–6 1/4"	2	5'–7 1/2"	13'–2"	7'–0"
54	5'–6"	27'–6"	6'–0"	28'–0 1/2"	4	30'–0 5/8"	2	6'–7 1/2"	13'–2 1/2"	8'–3"
60	6'–0"	30'–0"	6'–0"	30'–7 1/8"	4	32'–7 1/2"	2	6'–7 1/2"	11'–9 1/8"	10'–3"

6 : 1 SLOPE

CULVERT SIZE	H	L	W	Longitudinal Pipe			Cross Tube			
				S	No.	Length	No.	Length	S1	S2
12	2'–0"	12'–0"	2'–0"	12'–2"	1	14'–6 1/4"	2	2'–7 1/2"	6'–2"	4'–0"
15 & 18	2'–6"	15'–0"	2'–0"	15'–2 1/2"	1	17'–6 1/2"	2	2'–7 1/2"	6'–8 1/2"	5'–3"
21 & 24	3'–0"	18'–0"	3'–0"	18'–3"	2	20'–7 1/4"	2	3'–7 1/2"	9'–9"	5'–3"
27 & 30	3'–6"	21'–0"	3'–0"	21'–3 1/2"	2	23'–7 3/4"	2	3'–7 1/2"	9'–9 1/2"	6'–9"
33 & 36	4'–0"	24'–0"	4'–0"	24'–4"	3	26'–8 1/4"	2	4'–7 1/2"	13'–4"	6'–6"
42	4'–6"	27'–0"	4'–0"	27'–4 1/2"	3	29'–8 3/4"	2	4'–7 1/2"	13'–4 1/2"	8'–0"
48	5'–0"	30'–0"	5'–0"	30'–5"	3	32'–9 1/4"	2	5'–7 1/2"	13'–5"	9'–6"
54	5'–6"	33'–0"	6'–0"	33'–5 1/2"	4	35'–9 3/4"	2	6'–7 1/2"	12'–11 1/2"	11'–3"
60	6'–0"	36'–0"	6'–0"	36'–6"	4	38'–10 1/8"	3	6'–7 1/2"	13'–0"	8'–6"

APPROXIMATE QUANTITIES

PIPE DIAMETER	2 : 1 SLOPE				3 : 1 SLOPE				4 : 1 SLOPE				5 : 1 SLOPE				6 : 1 SLOPE			
	Concrete, Cu. Yds.		Reinf. Steel, lb.	Str. Steel, lb.	Concrete, Cu. Yds.		Reinf. Steel, lb.	Str. Steel, lb.	Concrete, Cu. Yds.		Reinf. Steel, lb.	Str. Steel, lb.	Concrete, Cu. Yds.		Reinf. Steel, lb.	Str. Steel, lb.	Concrete, Cu. Yds.		Reinf. Steel, lb.	Str. Steel, lb.
	Conc. Pipe	C.M. Pipe			Conc. Pipe	C.M. Pipe			Conc. Pipe	C.M. Pipe			Conc. Pipe	C.M. Pipe			Conc. Pipe	C.M. Pipe		
12	1.1	1.1	290	80	1.4	1.4	375	160	1.7	1.7	465	195	2.1	2.1	555	275	2.4	2.4	645	305
15 & 18	1.3	1.3	345	145	1.8	1.8	460	180	2.2	2.2	575	270	2.8	2.8	690	305	3.0	3.0	805	345
21 & 24	1.9	1.9	460	215	2.5	2.5	620	370	3.1	3.1	775	460	3.7	3.8	935	545	4.3	4.4	1090	705
27 & 30	2.1	2.2	525	245	2.9	3.0	715	410	3.6	3.7	905	510	4.4	4.5	1095	680	5.2	5.3	1285	780
33 & 36	2.8	2.9	670	410	3.8	3.9	910	660	4.8	4.9	1150	825	5.9	6.0	1395	995	6.9	7.0	1640	1255
42	3.2	3.3	745	450	4.4	4.5	1025	720	5.6	5.7	1305	905	6.8	8.9	1585	1090	8.0	8.1	1870	1370
48	4.0	4.1	1.1	910	5.5	5.6	1250	80	8.5	8.7	1940	1310	10.1	10.2	1940	1310	10.1	10.2	2285	1515
54	4.9	5.1	1090	845	6.8	6.9	1500	1125	8.6	8.8	1915	1415	10.5	10.7	2330	1845	12.4	12.6	2745	2145
60	5.4	5.8	1180	900	7.8	7.7	1640	1205	9.8	9.8	2105	1850	11.7	11.9	2570	1970	13.8	14.0	3035	2425

INDIANA DEPARTMENT OF TRANSPORTATION

GRATED BOX END SECTION TYPE I DIMENSIONS AND QUANTITIES

JANUARY 1999

STANDARD DRAWING NO. E 715–GBTO–05

ANTHONY L. UREMOVICH REGISTERED No. 18095 STATE OF INDIANA PROFESSIONAL ENGINEER

DESIGN STANDARDS ENGINEER

DETAILS PLACED IN THIS FORMAT 11-15-99

/s/ Anthony L. Uremovich 11-15-99
DESIGN STANDARDS ENGINEER — DATE

/s/ Firooz Zandi 11-15-99
CHIEF HIGHWAY ENGINEER — DATE

ORIGNALLY APPROVED 1-04-99

2:1 SLOPE

Pipe Size	H	L	W	Longitudinal Pipe			Cross Tube			
				S	No.	Length	No.	Length	S 1	S 2
17 x 13	1'–9"	3'–6"	2'–0"	3'–11"	1	5'–0 7/8"	–	–	4'–7"	–
21 x 15	1'–11"	3'–10"	2'–0"	4'–3 1/2"	1	5'–5 3/8"	–	–	4'–11 3/8"	–
24 x 18	2'–2"	4'–4"	3'–0"	4'–10 1/8"	2	6'–0 1/8"	–	–	5'–6 1/8"	–
28 x 20	2'–4"	4'–8"	3'–0"	5'–2 1/2"	2	6'–4 3/8"	–	–	5'–10 3/8"	–
35 x 24	2'–8"	5'–4"	4'–0"	5'–11 1/2"	3	7'–1 1/2"	–	–	6'–7 1/2"	–
42 x 29	3'–1"	6'–2"	4'–0"	6'–10 3/4"	3	8'–0 3/4"	–	–	7'–6 3/4"	–
49 x 33	3'–5"	6'–10"	5'–0"	7'–7 5/8"	3	8'–9 5/8"	–	–	8'–3 5/8"	–
57 x 38	3'–10"	7'–8"	5'–0"	8'–6 7/8"	3	9'–8 7/8"	–	–	9'–2 7/8"	–
64 x 43	4'–3"	8'–6"	6'–0"	9'–6"	4	10'–8"	–	–	10'–2"	–
71 x 47	4'–7"	9'–2"	6'–0"	10–3"	4	11'–5"	–	–	10'–11"	–

3:1 SLOPE

Pipe Size	H	L	W	Longitudinal Pipe			Cross Tube			
				S	No.	Length	No.	Length	S 1	S 2
17 x 13	1'–9"	5'–3"	2'–0"	5'–6 3/8"	1	6'–11 1/2"	1	2'–7 1/2"	5'–0 3/8"	1'–6"
21 x 15	1'–11"	5'–9"	2'–0"	6'–0 3/4"	1	7'–5 3/4"	1	2'–7 1/2"	5'–0 3/4"	2'–0"
24 x 18	2'–2"	6'–6"	3'–0"	6'–10 1/4"	2	8'–3 1/4"	–	–	7'–10 1/4"	–
28 x 20	2'–4"	7'–0"	3'–0"	7'–4 1/2"	2	8'–9 5/8"	–	–	8'–4 1/2"	–
35 x 24	2'–8"	8'–0"	4'–0"	8'–5 1/4"	3	9'–10 1/4"	–	–	9'–5 1/4"	–
42 x 29	3'–1"	9'–3"	4'–0"	9'–9"	3	11'–2"	–	–	10'–9"	–
49 x 33	3'–5"	10'–3"	5'–0"	10'–9 5/8"	3	12'–2 3/4"	–	–	11'–9 5/8"	–
57 x 38	3'–10"	11'–6"	5'–0"	12'–1 1/2"	3	13'–6 1/2"	1	5'–7 1/2"	10'–1 1/2"	3'–0"
64 x 43	4'–3"	12'–9"	6'–0"	13'–5 1/4"	4	14'–10 3/8"	1	6'–7 1/2"	11'–5 1/4"	3'–0"
71 x 47	4'–7"	13'–9"	6'–0"	14'–5 7/8"	4	15'–11"	1	6'–7 1/2"	12'–5 7/8"	3'–0"

4:1 SLOPE

Pipe Size	H	L	W	Longitudinal Pipe			Cross Tube			
				S	No.	Length	No.	Length	S 1	S 2
17 x 13	1'–9"	7'–0"	2'–0"	7'–2 5/8"	1	8'–11 1/4"	1	2'–7 1/2"	5'–9 5/8"	2'–9"
21 x 15	1'–11"	7'–8"	2'–0"	7'–10 7/8"	1	9'–7 1/2"	1	2'–7 1/2"	5'–8 7/8"	3'–6"
24 x 18	2'–2"	8'–8"	3'–0"	8'–11 1/4"	2	10'–7 7/8"	1	3'–7 1/2"	8'–3 1/4"	2'–0"
28 x 20	2'–4"	9'–4"	3'–0"	9'–7 1/2"	2	11'–4"	1	3'–7 1/2"	8'–11 1/2"	2'–0"
35 x 24	2'–8"	10'–8"	4'–0"	11'–0"	3	12'–8 1/2"	–	–	12'–4"	–
42 x 29	3'–1"	12'–4"	4'–0"	12'–8 1/2"	3	14'–5 3/8"	1	4'–7 1/2"	11'–0 1/2"	3'–0"
49 x 33	3'–5"	13'–8"	5'–0"	14'–1"	3	15'–9 5/8"	1	5'–7 1/2"	12'–5"	3'–0"
57 x 38	3'–10"	15'–4"	5'–0"	15'–9 5/8"	3	17'–6 1/4"	1	5'–7 1/2"	12'–7 5/8"	4'–6"
64 x 43	4'–3"	17'–0"	6'–0"	17'–6 1/4"	4	19'–2 7/8"	1	6'–7 1/2"	12'–4 1/4"	6'–6"
71 x 47	4'–7"	18'–4"	6'–0"	18'–10 3/4"	4	20'–7 7/8"	1	6'–7 1/2"	12'–8 3/4"	7'–6"

INDIANA DEPARTMENT OF TRANSPORTATION

GRATED BOX END SECTION TYPE I DIMENSIONS

JANUARY 1999

STANDARD DRAWING NO. E 715-GBTO-06

ANTHONY L. UREMOVICH REGISTERED No. 18095 STATE OF INDIANA PROFESSIONAL ENGINEER

DESIGN STANDARDS ENGINEER

DETAILS PLACED IN THIS FORMAT 11-15-99

/s/ Anthony L. Uremovich 11-15-99
DESIGN STANDARDS ENGINEER DATE

/s/ Firooz Zandi 11-15-99
CHIEF HIGHWAY ENGINEER DATE

ORIGINALLY APPROVED 1-04-99

5:1 SLOPE										
Pipe Size	H	L	W	Longitudinal Pipe			Cross Tube			
				S	No.	Length	No.	Length	S 1	S 2
17 x 13	1'–9"	8'–9"	2'–0"	8'–11 1/8"	1	10'–11 1/2"	1	2'–7 1/2"	6'–1 1/8"	4'–6"
21 x 15	1'–11"	9'–7"	2'–0"	9'–9 1/4"	1	11'–9 3/8"	1	2'–7 1/2"	6'–8 1/4"	4'–9"
24 x 18	2'–2"	10'–10"	3'–0"	11–0 5/8"	2	13'–1"	1	3'–7 1/2"	8'–8 3/8"	4'–0"
28 x 20	2'–4"	11'–6"	3'–0"	11–0 3/4"	2	13'–11 1/8"	1	3'–7 1/2"	9'–6 3/4"	4'–0"
35 x 24	2'–8"	13'–4"	4'–0"	13'–7 1/8"	3	15'–7 1/2"	1	4'–7 1/2"	12'–3 5/8"	3'–0"
42 x 29	3'–1"	15'–5"	4'–0"	15'–8 3/8"	3	17'–9"	1	4'–7 1/2"	12'–10 5/8"	4'–6"
49 x 33	3'–5"	17'–1"	5'–0"	17'–5"	3	19'–5 1/2"	1	5'–7 1/2"	13'–1"	6'–0"
57 x 38	3'–10"	19'–2"	5'–0"	19'–6 1/2"	3	21'–6 7/8"	1	5'–7 1/2"	13'–2 1/2"	8'–0"
64 x 43	4'–3"	21'–3"	6'–0"	21'–8"	4	23'–8 3/8"	1	6'–7 1/2"	12'–10"	10'–6"
71 x 47	4'–7"	22'–11"	6'–0"	23'–4 3/8"	4	25'–4 3/4"	1	6'–7 1/2"	13'–6 3/8"	11'–6"

6:1 SLOPE										
Pipe Size	H	L	W	Longitudinal Pipe			Cross Tube			
				S	No.	Length	No.	Length	S 1	S 2
17 x 13	1'–9"	10'–6"	2'–0"	10'–7 3/4"	1	13'–0"	2	2'–7 1/2"	6'–7 3/4"	3'–0"
21 x 15	1'–11"	11'–6"	2'–0"	11'–7 7/8"	1	14'–0 1/8"	2	2'–7 1/2"	6'–1 1/8"	3'–9"
24 x 18	2'–2"	13'–0"	3'–0"	13'–2 1/8"	2	15'–6 3/8"	1	3'–7 1/2"	9'–8 1/8"	5'–6"
28 x 20	2'–4"	14'–0"	3'–0"	14'–2 1/4"	2	16'–6 1/2"	1	3'–7 1/2"	9'–8 1/4"	6'–6"
35 x 24	2'–5"	16'–0"	4'–0"	16'–2 5/8"	3	18'–6 7/8"	1	4'–7 1/2"	13'–2 5/8"	5'–0"
42 x 29	3'–1"	18'–6"	4'–0"	18'–9"	3	21'–1 1/4"	1	4'–7 1/2"	13'–6"	7'–3"
49 x 33	3'–5"	20'–6"	5'–0"	20'–9 3/8"	3	23'–1 5/8"	1	5'–7 1/2"	13'–3 3/8"	9'–6"
57 x 38	3'–10"	23'–0"	5'–0"	23'–3 3/4"	3	25'–8"	1	5'–7 1/2"	13'–9 1/4"	11'–6"
64 x 43	4'–3"	25'–6"	6'–0"	25'–10 1/4"	4	28'–2 1/2"	2	6'–7 1/2"	13'–4 1/4"	7'–3"
71 x 47	4'–7"	27'–6"	6'–0"	27'–10 1/2"	4	30'–2 3/4"	2	6'–7 1/2"	13'–4 1/2"	8'–3"

INDIANA DEPARTMENT OF TRANSPORTATION

GRATED BOX END SECTION TYPE I DIMENSIONS

JANUARY 1999

STANDARD DRAWING NO. E 715-GBTO-07

ANTHONY L. UREMOVICH REGISTERED No. 18095 STATE OF INDIANA PROFESSIONAL ENGINEER

DESIGN STANDARDS ENGINEER

DETAILS PLACED IN THIS FORMAT 11-15-99

/s/ Anthony L. Uremovich 11-15-99
DESIGN STANDARDS ENGINEER DATE

/s/ Firooz Zandi 11-15-99
CHIEF HIGHWAY ENGINEER DATE

ORIGINALLY APPROVED 1-04-99

APPROXIMATE QUANTITIES

PIPE SIZE	2:1 SLOPE				3:1 SLOPE				4:1 SLOPE				5:1 SLOPE				6:1 SLOPE			
	Concrete, Cu. Yds.		Reinf. Steel, lb.	Str. Steel, lb.	Concrete, Cu. Yds.		Reinf. Steel, lb.	Str. Steel, lb.	Concrete, Cu. Yds.		Reinf. Steel, lb.	Str. Steel, lb.	Concrete, Cu. Yds.		Reinf. Steel, lb.	Str. Steel, lb.	Concrete, Cu. Yds.		Reinf. Steel, lb.	Str. Steel, lb.
	Conc. Pipe	C.M. Pipe			Conc. Pipe	C.M. Pipe			Conc. Pipe	C.M. Pipe			Conc. Pipe	C.M. Pipe			Conc. Pipe	C.M. Pipe		
17 x 13	–	1.0	260	75	–	1.2	335	150	–	1.5	415	180	–	1.8	490	210	–	2.1	565	290
21 x 15	–	1.1	280	80	–	1.3	360	160	–	1.6	445	190	–	1.9	530	220	–	2.3	615	300
24 x 18	–	1.4	360	170	–	1.8	465	235	–	2.2	570	370	–	2.6	680	440	–	3.1	790	505
28 x 20	–	1.5	375	180	–	1.9	495	245	–	2.4	610	390	–	2.8	730	460	–	3.3	845	530
35 x 24	–	2.0	475	300	–	2.6	625	410	–	3.2	775	525	–	3.8	925	740	–	4.4	1075	860
42 x 29	–	2.2	535	335	–	2.9	710	460	–	3.6	885	685	–	4.4	1060	820	–	5.1	1240	955
49 x 33	–	2.8	645	360	–	3.7	860	500	–	4.6	1075	750	–	5.5	1290	900	–	6.4	1505	1045
57 x 38	–	3.0	710	395	–	4.1	955	655	–	5.2	1205	815	–	6.2	1450	980	–	7.3	1700	1140
64 x 43	–	3.8	855	575	–	5.1	1155	925	–	6.4	1450	1160	–	7.8	1755	1400	–	9.1	2055	1760
71 x 47	–	4.0	910	610	–	5.5	1235	980	–	7.0	1565	1225	–	8.4	1895	1480	–	9.9	2225	1865

DIMENSIONS

Slope	A	B	C	D	E	F
2:1	0′–9″	0′–8″	0′–6 1/2″	0′–8 1/2″	0′–0 3/4″	0′–0 7/8″
3:1	1′–0 5/8″	1′–0″	0′–5 1/2″	0′–6 7/8″	0′–1 1/8″	0′–1 1/8″
4:1	1′–4 1/2″	1′–4″	0′–5 1/8″	0′–6 1/8″	0′–1 1/2″	0′–1 1/2″
5:1	1′–8 3/8″	1′–8″	0′–4 5/8″	0′–5 3/8″	0′–1 7/8″	0′–1 7/8″
6:1	2′–0 3/8″	2′–0″	0′–4 1/4″	0′–5 3/8″	0′–2 1/4″	0′–2 1/4″

INDIANA DEPARTMENT OF TRANSPORTATION

GRATED BOX END SECTION TYPE I DIMENSIONS AND QUANTITIES

JANUARY 1999

STANDARD DRAWING NO. E 715-GBTO-08

ANTHONY L. UREMOVICH REGISTERED No. 18095 STATE OF INDIANA PROFESSIONAL ENGINEER

DESIGN STANDARDS ENGINEER

DETAILS PLACED IN THIS FORMAT 11-15-99

/s/ Anthony L. Uremovich 11-15-99
DESIGN STANDARDS ENGINEER DATE

/s/ Firooz Zandi 11-15-99
CHIEF HIGHWAY ENGINEER DATE

ORIGINALLY APPROVED 1-04-99

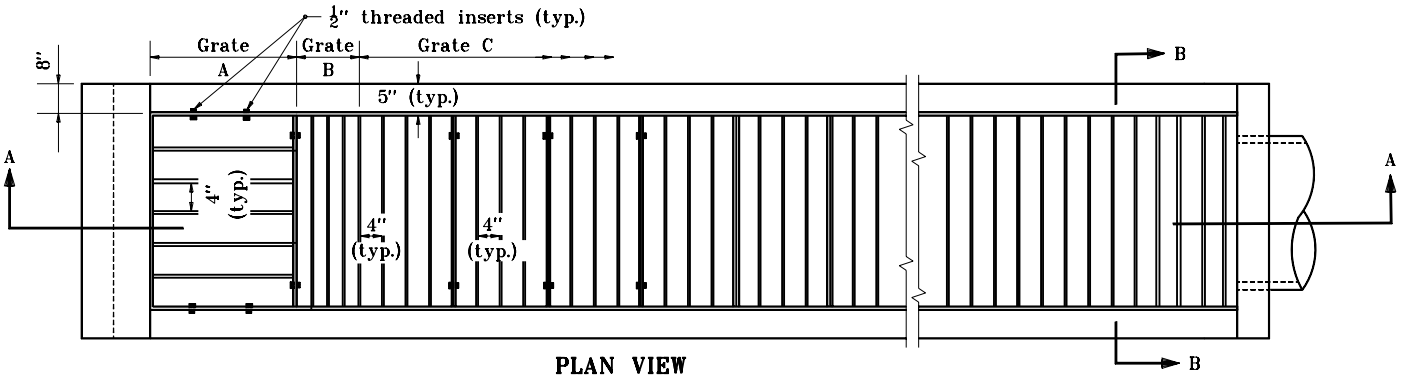

PLAN VIEW

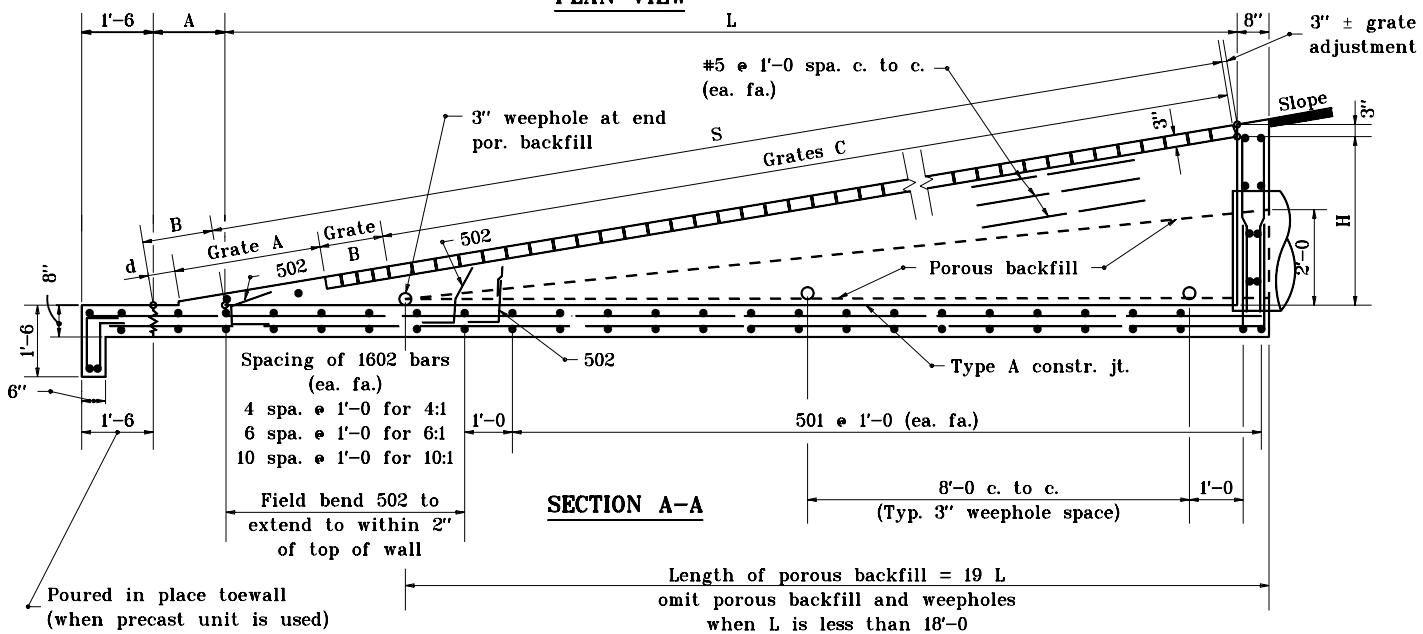

SECTION A-A

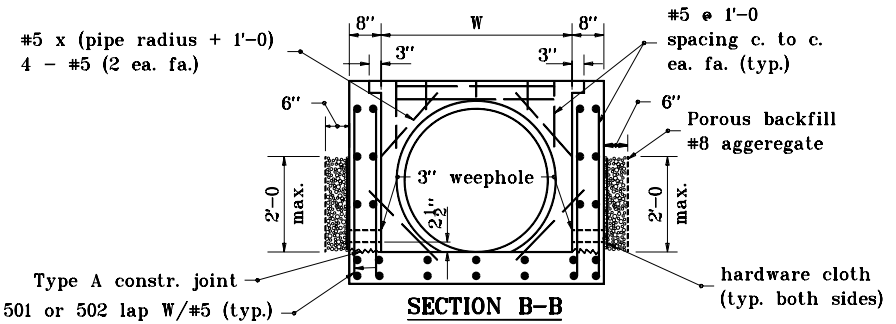

SECTION B-B

GENERAL NOTES

1. The invert grade of the grated box end section shall be the same as that of the pipe.
2. See Standard Drawings E 715-GBTT-05 and -06 for dimensions tables.
3. Type II grated box end sections shall be used for culverts parallel to the mainline within the clear zone.
4. See Standard Drawing E 715-GBTT-02 for bending diagrams.

INDIANA DEPARTMENT OF TRANSPORTATION

GRATED BOX END SECTION TYPE II

JANUARY 1999

STANDARD DRAWING NO. E 715-GBTT-01

ANTHONY L. UREMOVICH REGISTERED No. 18095 STATE OF INDIANA PROFESSIONAL ENGINEER

DESIGN STANDARDS ENGINEER

DETAILS PLACED IN THIS FORMAT 11-15-99

/s/ Anthony L. Uremovich 11-15-99
DESIGN STANDARDS ENGINEER DATE

/s/ Firooz Zandi 11-15-99
CHIEF HIGHWAY ENGINEER DATE

ORIGINALLY APPROVED 1-04-99

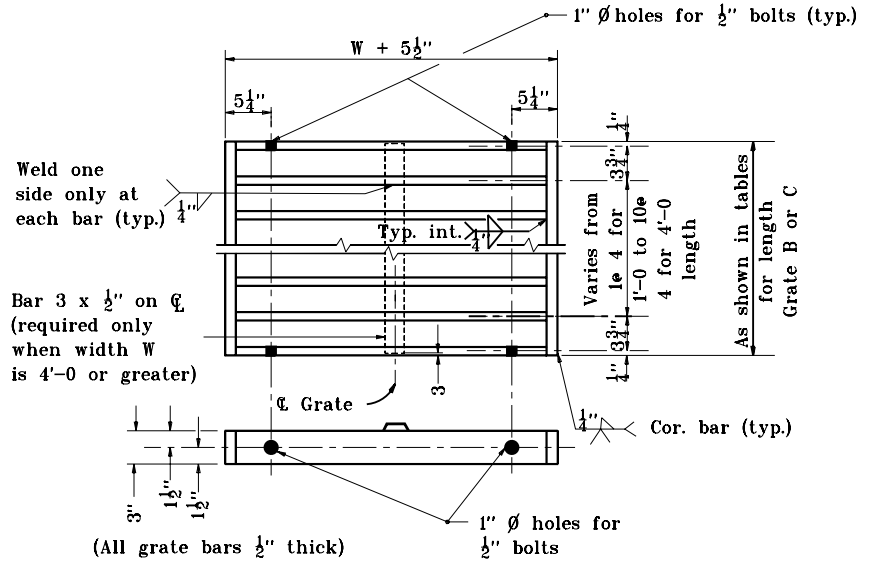

GRATE B & C

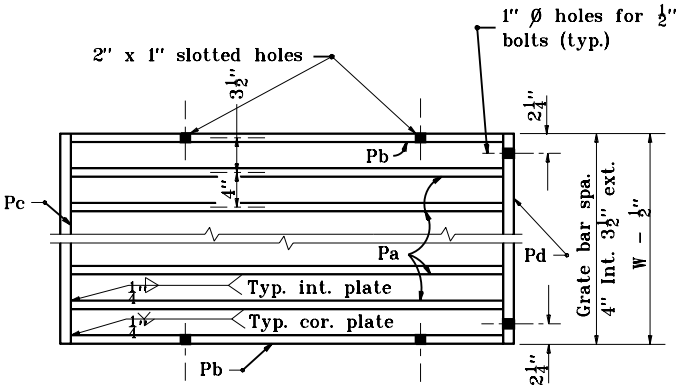

PLAN VIEW

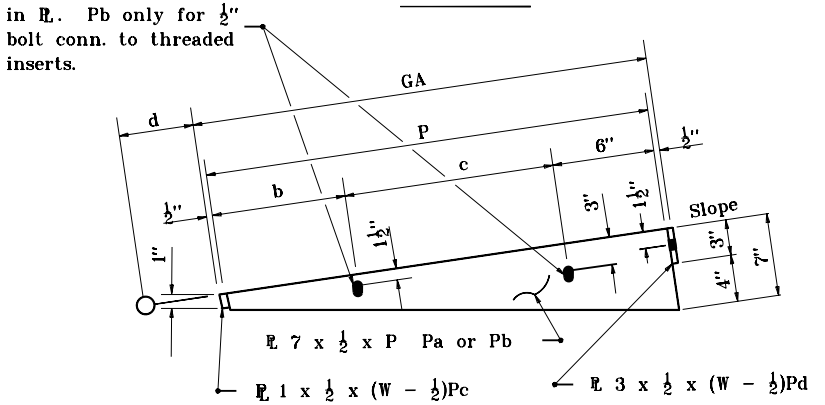

ELEVATION GRATE A

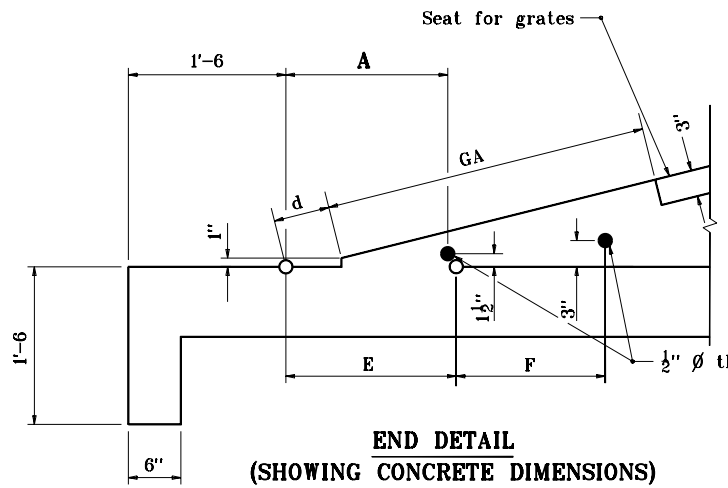

END DETAIL (SHOWING CONCRETE DIMENSIONS)

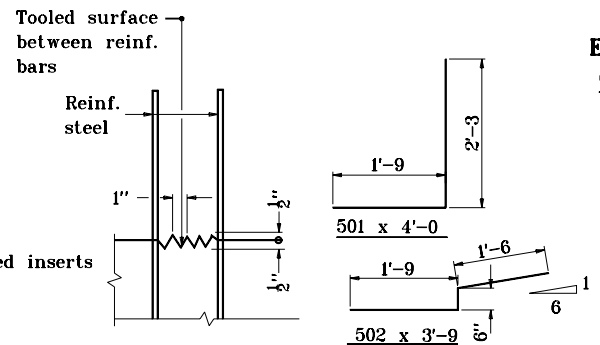

TYPE A CONSTR. JOINT

INDIANA DEPARTMENT OF TRANSPORTATION

GRATED BOX END SECTION TYPE II

JANUARY 1999

STANDARD DRAWING NO. E 715-GBTT-02

DETAILS PLACED IN THIS FORMAT 11-15-99

ANTHONY L. UREMOVICH REGISTERED No. 18095 STATE OF INDIANA PROFESSIONAL ENGINEER

/s/ Anthony L. Uremovich 11-15-99
DESIGN STANDARDS ENGINEER DATE

/s/ Firooz Zandi 11-15-99
CHIEF HIGHWAY ENGINEER DATE

DESIGN STANDARDS ENGINEER

ORGINALLY APPROVED 1-04-99

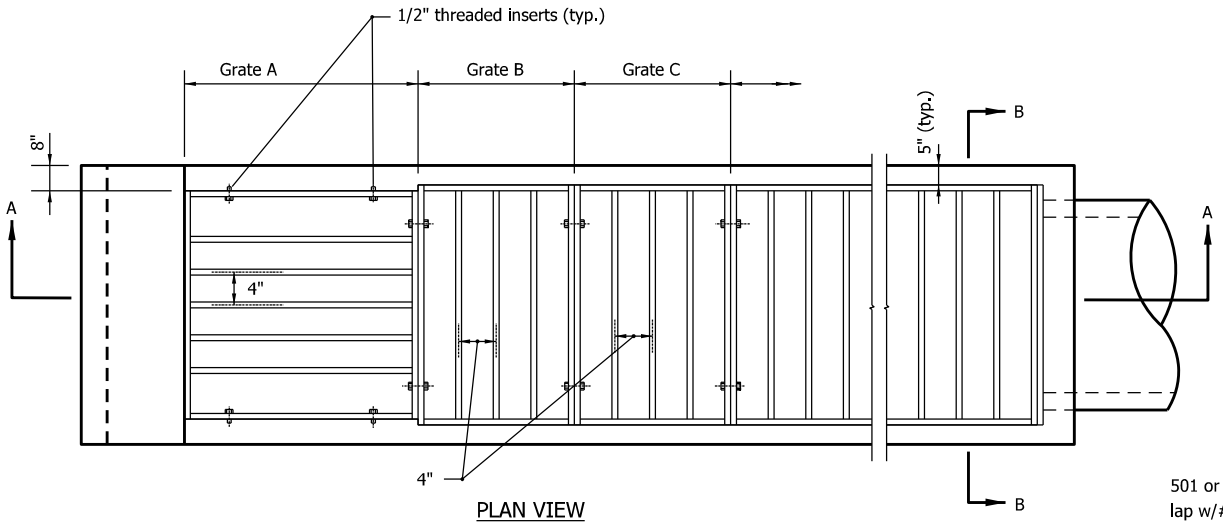

PLAN VIEW

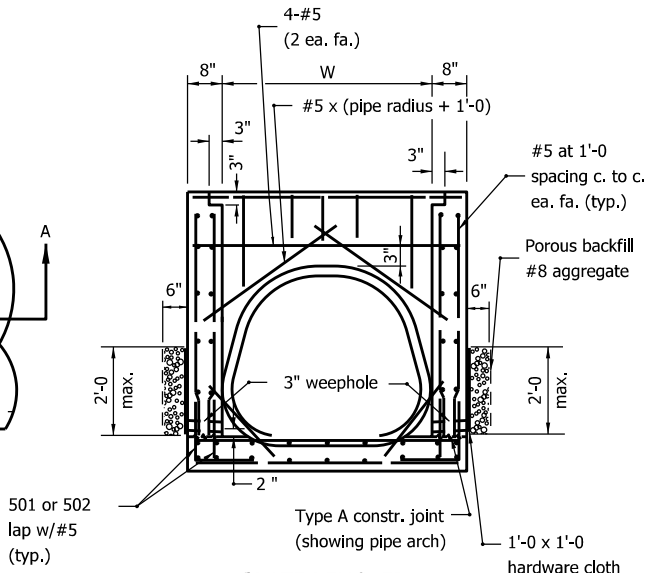

GRATE REMOVED

SECTION B-B

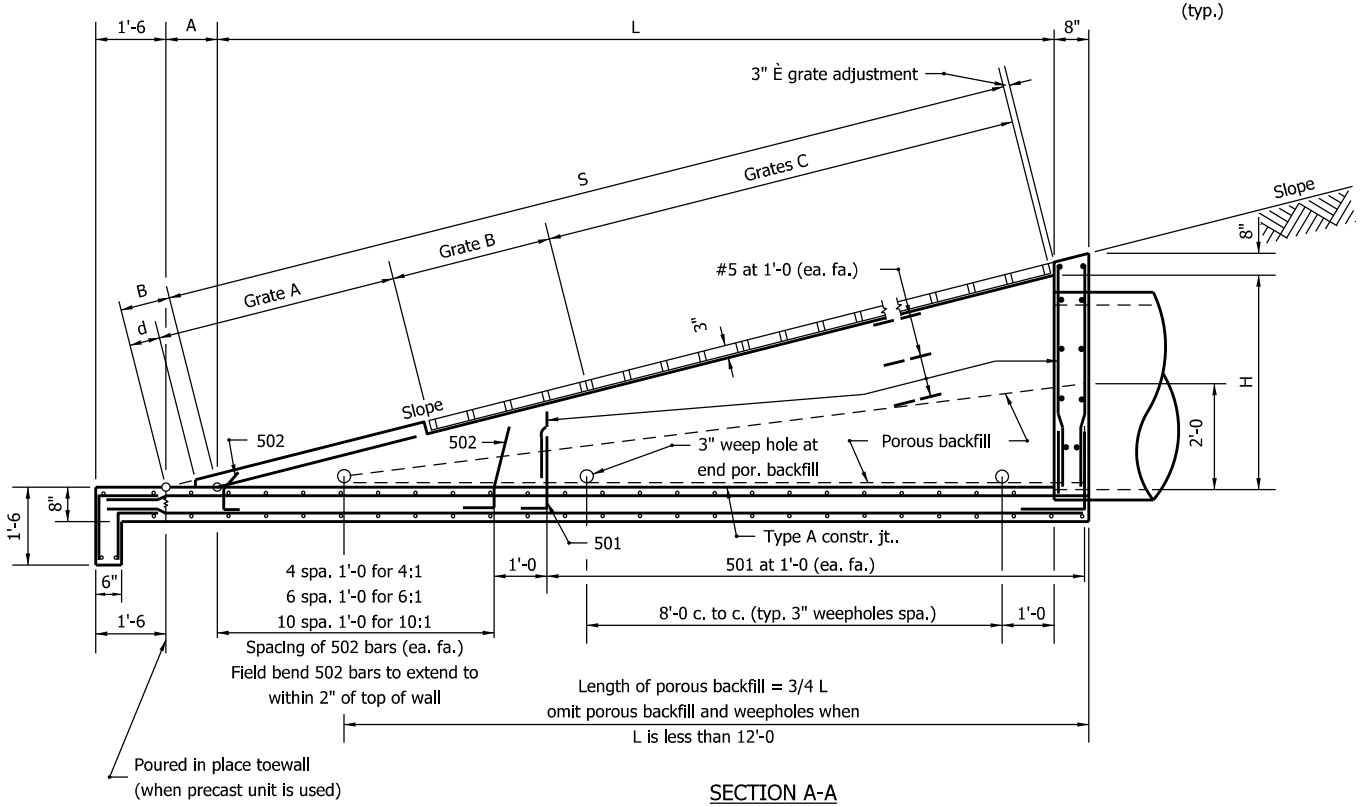

SECTION A-A

GENERAL NOTES

1. The invert grade of the grated box end section shall be the same as that of the pipe.
2. See Standard Drawings E 715-GBTT-05 and -06 for dimensions tables.
3. See Standard Drawing E 715-GBTT-02 for bending diagrams.
4. Type II grated box end sections shall be used for culverts parallel to the mainline within the clear zone.

INDIANA DEPARTMENT OF TRANSPORTATION

GRATED BOX END SECTION TYPE II

MARCH 2006

STANDARD DRAWING NO. E 715-GBTT-03

RICHARD L. VanCLEAVE REGISTERED No. 9750 STATE OF INDIANA PROFESSIONAL ENGINEER

DESIGN STANDARDS ENGINEER

/s/ Richard L. VanCleave 3-01-06
DESIGN STANDARDS ENGINEER DATE

/s/ Richard K. Smutzer 3-01-06
CHIEF HIGHWAY ENGINEER DATE

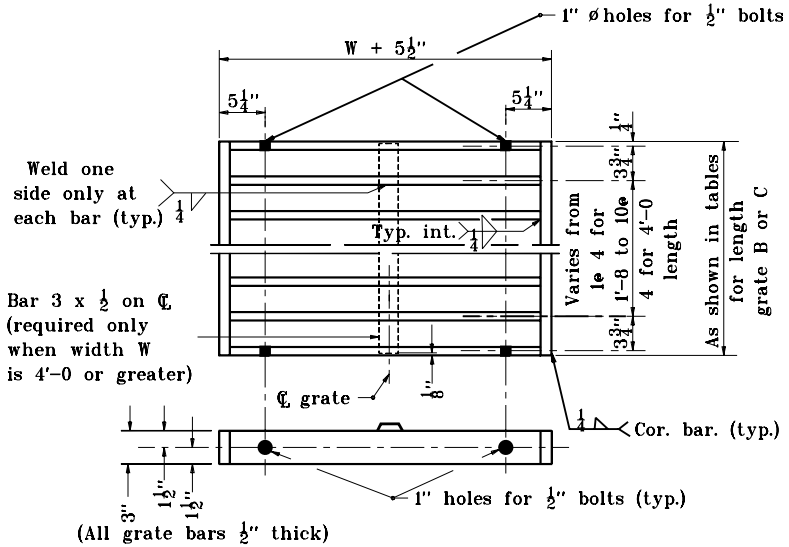

GRATE B & C

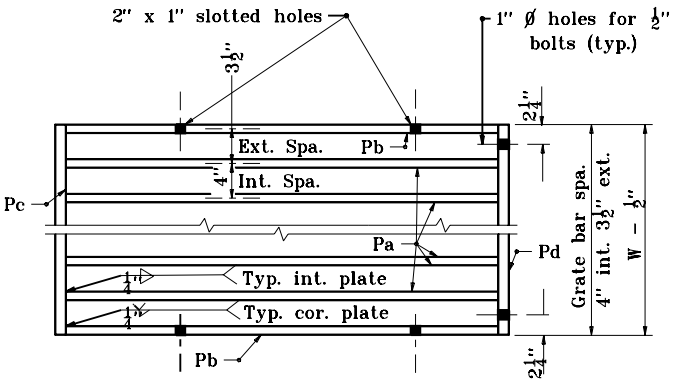

PLAN VIEW

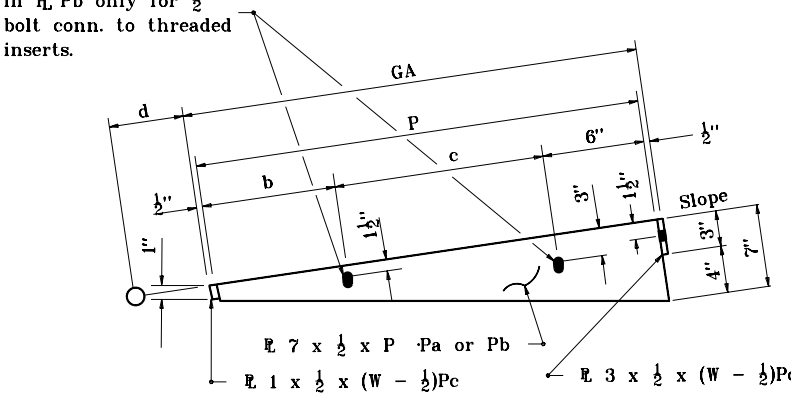

ELEVATION
GRATE A

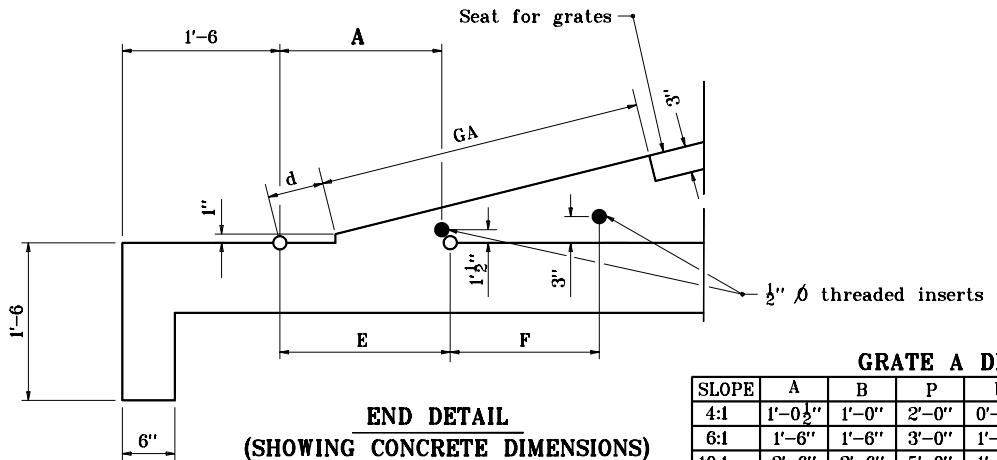

END DETAIL
(SHOWING CONCRETE DIMENSIONS)

GRATE A DIMENSIONS TABLE

SLOPE	A	B	P	b	c	d	E	F	G
4:1	1'-0½"	1'-0"	2'-0"	0'-8"	0'-10"	4"	1'-0½"	0'-10"	2'-1"
6:1	1'-6"	1'-6"	3'-0"	1'-0"	1'-6"	6"	1'-6½"	1'-6"	3'-1"
10:1	2'-6"	2'-6"	5'-0"	1'-8"	2'-10"	10"	2'-6½"	2'-10"	5'-1"

INDIANA DEPARTMENT OF TRANSPORTATION

GRATED BOX END SECTION TYPE II

JANUARY 1999

STANDARD DRAWING NO. **E 715-GBTT-04**

ANTHONY L. UREMOVICH REGISTERED No. 18095 STATE OF INDIANA PROFESSIONAL ENGINEER

DESIGN STANDARDS ENGINEER

DETAILS PLACED IN THIS FORMAT 11-15-99

/s/ Anthony L. Uremovich 11-15-99
DESIGN STANDARDS ENGINEER DATE

/s/ Firooz Zandi 11-15-99
CHIEF HIGHWAY ENGINEER DATE

ORIGINALLY APPROVED 1-04-99

4:1 Slope							
Pipe Diameter	H	L	W	S	Grate C		Grate B
					NO.	Length	Length
12	1'–5	5'–8	2'–0	5'–9	1	3'–4	1'–0
15 & 18	2'–0	8'–0	2'–0	8'–1	1	4'–0	2'–8
21 & 24	2'–6	10'–0	3'–0	10'–1	2	3'–0	2'–8
27 & 30	3'–1	12'–4	3'–0	12'–5	3	3'–0	2'–0
33 & 36	3'–7	14'–4	4'–0	14'–5	5	2'–4	1'–4
42	4'–2	16'–5	4'–0	17'–1	6	2'–4	1'–8
48	4'–8	18'–8	5'–0	19'–1	8	2'–0	1'–8
54	5'–3	21'–0	6'–0	21'–5	12	1'–8	–
60	5'–9	23'–0	6'–0	23'–5	12	1'–8	2'–0

10:1 Slope							
Pipe Diameter	H	L	W	S	Grate C		Grate B
					No.	Length	Length
12	1'–5	14'–2	2'–0	14'–1	2	4'–0	2'–8
15 & 18	2'–0	20'–0	2'–0	19'–9	4	3–8	1'–8
21 & 24	2'–6	25'–0	3'–0	24'–9	8	2'–8	–
27 & 30	3'–1	30'–10	3'–0	30'–5	9	3'–0	–
33 & 36	3'–7	35'–10	4'–0	35'–9	13	2'–4	2'–0
42	4'–2	41'–8	4'–0	41'–9	16	2'–4	1'–0
48	4'–8	46'–8	5'–0	46'–9	21	2'–0	1'–4
54	5'–3	52'–6	6'–0	52'–5	36	1'–4	1'–0
60	5'–9	57'–6	6'–0	57'–9	40	1'–4	1'–0

6:1 Slope							
Pipe Diameter	H	L	W	S	Grate C		Grate B
					No.	Length	Length
12	1'–5	8'–6	2'–0	8'–5	1	4'–0	2'–4
15 & 18	2'–0	12'–0	2'–0	11'–9	2	4'–0	1'–8
21 & 24	2'–6	15'–0	3'–0	15'–1	4	3'–0	1'–0
27 & 30	3'–1	18'–6	3'–0	18'–5	5	3'–0	1'–4
33 & 36	3'–7	21'–6	4'–0	21'–5	9	2'–0	1'–4
42	4'–2	25'–0	4'–0	25'–1	9	2'–4	2'–0
48	4'–8	28'–0	5'–0	28'–1	13	2'–0	–
54	5'–3	31'–6	6'–0	31'–9	17	1'–8	1'–4
60	5'–9	34'–6	6'–0	34'–9	19	1'–8	1'–0

GRATE A DIMENSIONS TABLE									
Slope	A	B	P	b	c	d	E	F	GA
4:1	1'–0½"	1'–0	2'–0	0'–8	0'–10	4"	1'–0½"	0'–10	2'–1
6:1	1'–6	1'–6	3'–0	1'–0	1'–6	6"	1'–6½"	1'–6	3'–1
10:1	2'–6	2'–6	5'–0	1'–8	2'–10	10"	2'–6½"	2'–10	5'–1

APPROXIMATE QUANTITIES												
Pipe Diameter	4:1 Slope				6:1 Slope				10:1 Slope			
	Conc., cys		Reinf. Steel, lb.	Str. Steel, lb.	Conc., cys		Reinf. Steel, lb.	Str. Steel, lb.	Conc., cys		Reinf. Steel, lb.	Str. Steel, lb.
	Conc. Pipe	C.M. Pipe			Conc. Pipe	C.M. Pipe			Conc. Pipe	C.M. Pipe		
12	1.1	1.1	295	335	1.5	1.5	400	480	2.3	2.4	605	790
15 & 18	1.6	1.6	395	445	2.2	2.2	550	645	3.4	3.4	865	1080
21 & 24	2.4	2.4	565	750	3.3	3.3	790	1130	5.2	5.2	1245	1830
27 & 30	2.9	3.0	695	910	4.2	4.3	980	1345	6.6	6.7	1580	2195
33 & 36	4.0	4.1	910	1415	5.7	5.8	1290	2115	9.1	9.2	2075	3455
42	4.8	4.9	1085	1655	6.9	7.0	1545	2415	11.0	11.2	2490	4015
48	6.2	6.3	1350	2230	8.8	9.0	1925	3265	14.2	14.4	3100	5425
54	7.8	8.0	1665	2955	11.3	11.4	2400	4375	18.1	18.3	3855	7440
60	8.7	8.9	1850	3215	12.6	12.8	2675	4780	20.4	20.4	4310	8175

INDIANA DEPARTMENT OF TRANSPORTATION

GRATED BOX END SECTION DIMENSIONS & QUANTITIES TYPE II

JANUARY 1999

STANDARD DRAWING NO. E 715–GBTT–05

ANTHONY L. UREMOVICH REGISTERED No. 18095 STATE OF INDIANA PROFESSIONAL ENGINEER

DESIGN STANDARDS ENGINEER

DETAILS PLACED IN THIS FORMAT 11-15-99

/s/ Anthony L. Uremovich 11-15-99
DESIGN STANDARDS ENGINEER DATE

/s/ Firooz Zandi 11-15-99
CHIEF HIGHWAY ENGINEER DATE

ORIGINALLY APPROVED 1-04-99

4:1 SLOPE							
PIPE SIZE	H	L	W	S	GRATE C		GRATE B
					No.	LENGTH	LENGTH
17 x 13	1'–6	6'–0	2'–0	6'–1	1	3'–8	1'–0
21 x 15	1'–8	6'–8	2'–0	6'–9	1	4'–0	1'–4
24 x 18	1'–11	7'–8	3'–0	7'–9	2	2'–8	1'–0
28 x 20	2'–1	8'–4	3'–0	8'–5	2	3'–0	1'–0
35 x 24	2'–5	9'–8	4'–0	9'–9	3	2'–4	1'–4
42 x 29	2'–10	11'–4	4'–0	11'–5	5	2'–0	–
49 x 33	3'–2	12'–8	5'–0	12'–9	5	2'–0	1'–4
57 x 38	3'–7	14'–4	5'–0	14'–5	6	2'–0	1'–0
64 x 43	4'–0	16'–0	6'–0	16'–5	9	1'–8	–
71 x 47	4'–4	17'–4	6'–0	17'–9	9	1'–8	1'–4

10:1 SLOPE							
PIPE SIZE	H	L	W	S	GRATE C		GRATE B
					No.	LENGTH	LENGTH
17 x 13	1'–6	15'–0	2'–0	14'–9	2	4'–0	3'–4
21 x 15	1'–8	16'–8	2'–0	16'–5	3	4'–0	1'–0
24 x 18	1'–11	19'–2	3'–0	19'–1	5	2'–6	2'–4
28 x 20	2'–1	20'–10	3'–0	20'–9	5	3'–0	2'–4
35 x 24	2'–5	24'–2	4'–0	24'–1	8	2'–4	2'–0
42 x 29	2'–10	28'–4	4'–0	28'–1	10	2'–4	1'–4
49 x 33	3'–2	31'–8	5'–0	31'–9	17	1'–8	–
57 x 38	3'–7	35'–10	5'–0	35'–9	23	1'–4	1'–8
64 x 43	4'–0	40'–0	6'–0	40'–1	22	1'–8	–
71 x 47	4'–4	43'–4	6'–0	43'–5	24	1'–8	–

6:1 SLOPE							
PIPE SIZE	H	L	W	S	GRATE C		GRATE B
					No.	LENGTH	LENGTH
17 x 13	1'–6	9'–0	2'–0	8'–9	1	4'–0	2'–8
21 x 15	1'–8	10'–0	2'–0	9'–9	1	4'–0	3'–8
24 x 18	1'–11	11'–6	3'–0	11'–5	3	2'–8	1'–4
28 x 20	2'–1	12'–6	3'–0	12'–5	3	3'–0	1'–4
35 x 24	2'–5	14'–6	4'–0	14'–5	5	2'–0	2'–4
42 x 29	2'–10	17'–0	4'–0	17'–1	7	2'–0	1'–0
49 x 33	3'–2	19'–0	5'–0	19'–1	8	2'–0	1'–0
57 x 38	3'–7	21'–6	5'–0	21'–5	9	2'–0	1'–4
64 x 43	4'–0	24'–0	6'–0	24'–1	12	1'–8	2'–0
71 x 47	4'–4	26'–0	6'–0	26'–1	18	1'–4	–

APPROXIMATE QUANTITIES									
PIPE Size	4:1 SLOPE			6:1 SLOPE			10:1 SLOPE		
	Str. Steel, lb.	Conc., cys	Reinf. Steel, lb.	Str. Steel, lb.	Conc., cys	Reinf. Steel, lb.	Str. Steel, lb.	Conc., cys	Reinf. Steel, lb.
17 x 13	355	1.2	305	495	1.6	415	820	2.5	640
21 x 15	385	1.3	335	540	1.8	460	910	2.8	715
24 x 18	605	1.8	440	875	2.5	610	1445	3.9	935
28 x 20	645	2.0	465	940	2.7	645	1545	4.2	1020
35 x 24	975	2.7	615	1435	3.7	855	2375	5.8	1325
42 x 29	1145	3.1	700	1710	4.4	995	2750	6.9	1570
49 x 33	1520	4.0	880	2270	5.6	1230	3825	8.9	1960
57 x 38	1715	4.5	985	2525	6.4	1400	4400	10.2	2245
64 x 43	2295	5.7	1210	3335	8.1	1725	5560	12.9	2755
71 x 47	2470	6.2	1310	3735	8.9	1880	6005	14.2	3015

INDIANA DEPARTMENT OF TRANSPORTATION

GRATED BOX END SECTION TYPE II DIMENSIONS AND QUANTITIES

JANUARY 1999

STANDARD DRAWING NO. **E 715–GBTT–06**

ANTHONY L. UREMOVICH REGISTERED No. 18095 STATE OF INDIANA PROFESSIONAL ENGINEER

DESIGN STANDARDS ENGINEER

DETAILS PLACED IN THIS FORMAT 11-15-99

/s/ Anthony L. Uremovich 11-15-99
DESIGN STANDARDS ENGINEER DATE

/s/ Firooz Zandi 11-15-99
CHIEF HIGHWAY ENGINEER DATE

ORIGINALLY APPROVED 1-04-99

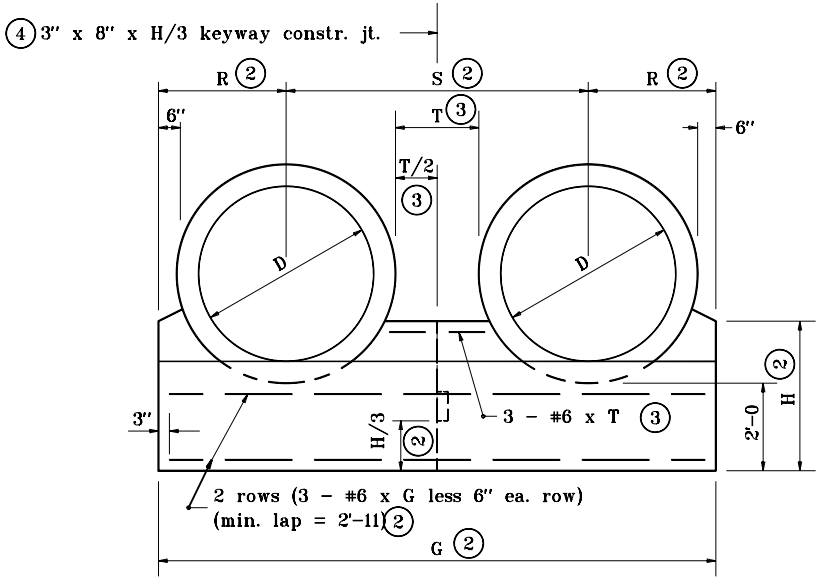

ANCHOR FOR DOUBLE PIPE INSTALLATION
FRONT ELEVATION

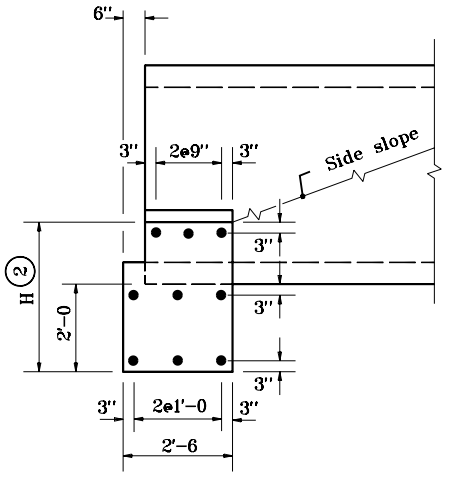

SECTION THROUGH ANCHOR

GENERAL NOTES

1. Circular reinforced concrete pipes shown. For details of other pipe alternates, see partial elevations on Standard Drawing E 715-MPCA-02.

(2) For dimension enter chart on Standard Drawing E 715-ANCH-01 with known dimension D.

(3) T = Clear distance between pipes.
For D less than 48", T = 2'-0.
For D of 48" to 96", T = 1/2 D
For D greater than 96", T = 4'-0.

(4) No joint required if G is less than or equal to 30'. One joint required if G is greater than 30' but less than or equal to 42'. Two joints required if G is greater than 42'.

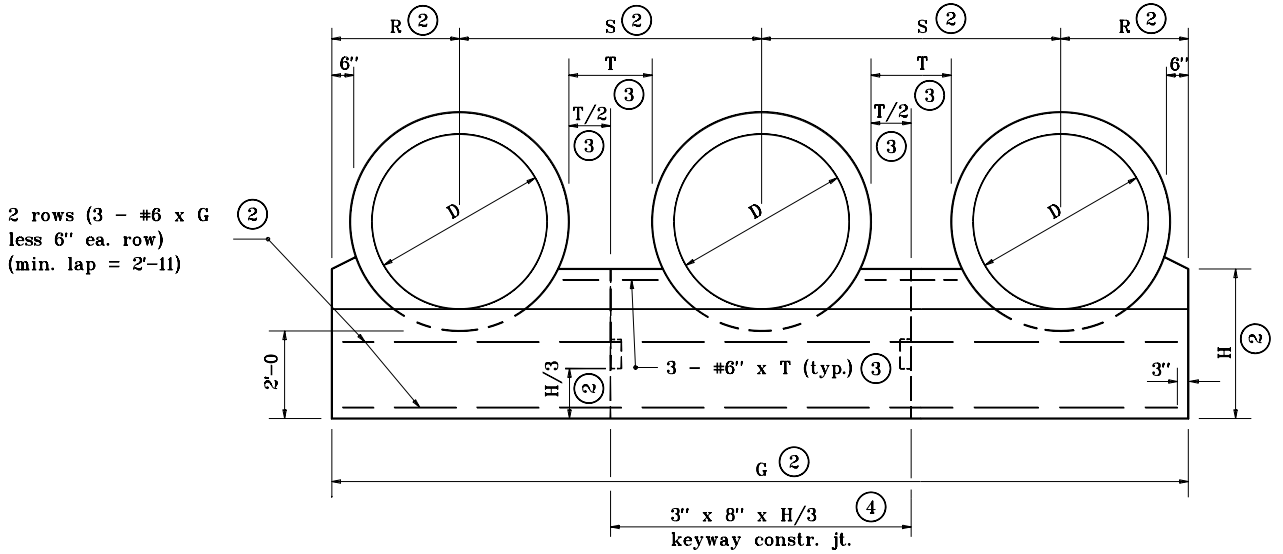

ANCHOR FOR TRIPLE PIPE INSTALLATION
FRONT ELEVATION

INDIANA DEPARTMENT OF TRANSPORTATION

MULTIPLE PIPE CONCRETE ANCHORS

JANUARY 1998

STANDARD DRAWING NO. **E 715-MPCA-01**

ANTHONY L. UREMOVICH REGISTERED No. 18095 STATE OF INDIANA PROFESSIONAL ENGINEER

DESIGN STANDARDS ENGINEER

DETAILS PLACED IN THIS FORMAT	7-27-99
/s/ Anthony L. Uremovich, DESIGN STANDARDS ENGINEER	7-27-99 DATE
/s/ Firooz Zandi, CHIEF HIGHWAY ENGINEER	7-27-99 DATE
ORIGINALLY APPROVED	1-02-98

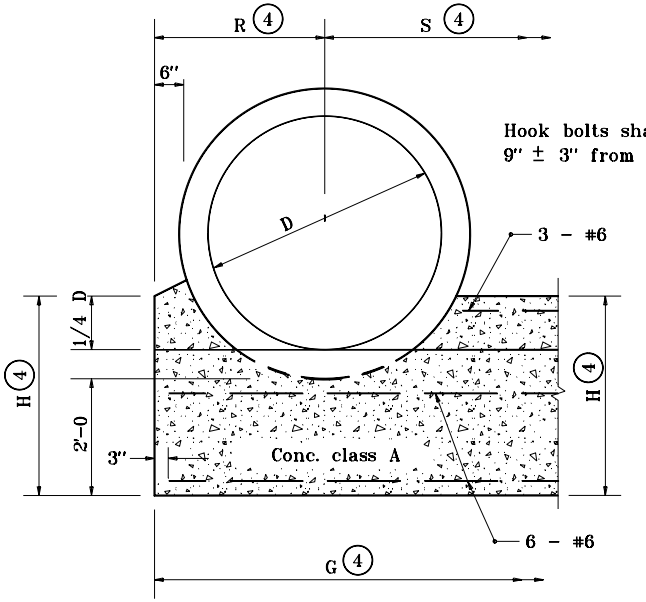

ANCHOR FOR
REINFORCED CONCRETE PIPE
PARTIAL ELEVATION

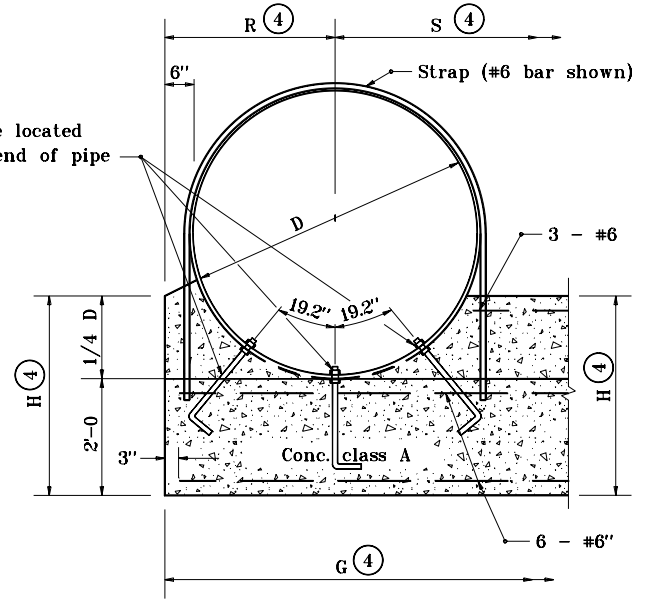

ANCHOR FOR
CORRUGATED METAL PIPE
PARTIAL ELEVATION

GENERAL NOTES

1. Anchor straps shall be used at both upstream and downstream ends of all C.M. pipes with a diameter or span of 42" or greater.
2. Hook bolts and anchor straps shall be used for all C.M. pipes with a diameter or span of 84" or greater.
3. Riprap shall be placed at the ends of pipe structures when shown on the plans.

(4) For dimension, enter chart on Standard Drawing E 715-ANCH-01 with known dimension D.

(5) For dimension, enter chart on Standard Drawing E 715-ANCH-02 with known span and rise.

LEGEND

C.M. = Corrugated Metal

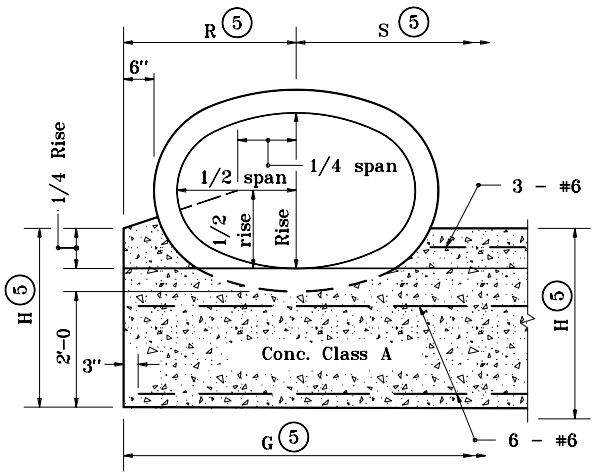

ANCHOR FOR
REINFORCED CONCRETE HORIZONTAL ELLIPTICAL PIPE
PARTIAL ELEVATION

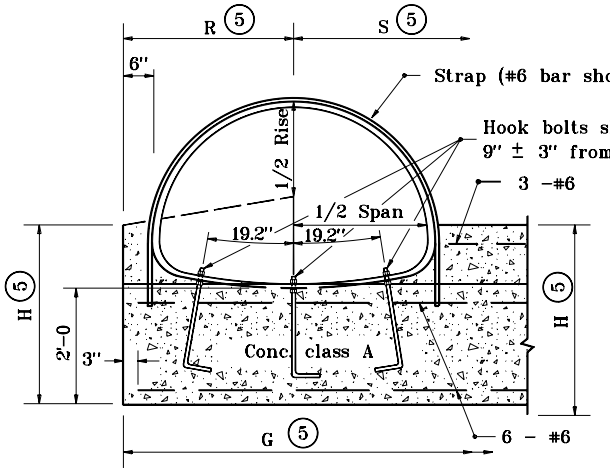

ANCHOR FOR CORRUGATED METAL PIPE-ARCH
PARTIAL ELEVATION

INDIANA DEPARTMENT OF TRANSPORTATION

MULTIPLE PIPE CONCRETE ANCHOR

JANUARY 1998

STANDARD DRAWING NO. **E 715-MPCA-02**

ANTHONY L. UREMOVICH REGISTERED No. 18095 STATE OF INDIANA PROFESSIONAL ENGINEER

DESIGN STANDARDS ENGINEER

DETAILS PLACED IN THIS FORMAT	7-27-99
/s/ Anthony L. Uremovich, DESIGN STANDARDS ENGINEER	7-27-99 DATE
/s/ Firooz Zandi, CHIEF HIGHWAY ENGINEER	7-27-99 DATE
ORIGINALLY APPROVED	1-02-98

PIPE DIA.	END SECTION THICK. (in.)	DIMENSIONS					APPROX. SLOPE	BODY
		A (±1")	B (Max.)	H (±1")	L (±1½")	W (±2")		
12	.064	6	6	6	21	24	2½:1	1 Pc.
15	.064	7	8	6	26	30	2½:1	1 Pc.
18	.064	8	10	6	31	36	2½:1	1 Pc.
21	.064	9	12	6	36	42	2½:1	1 Pc.
24	.064	10	13	6	41	48	2½:1	1 Pc.
30	.079	12	16	8	51	60	2½:1	1 Pc.
36	.079	14	19	9	60	72	2½:1	2 Pc.

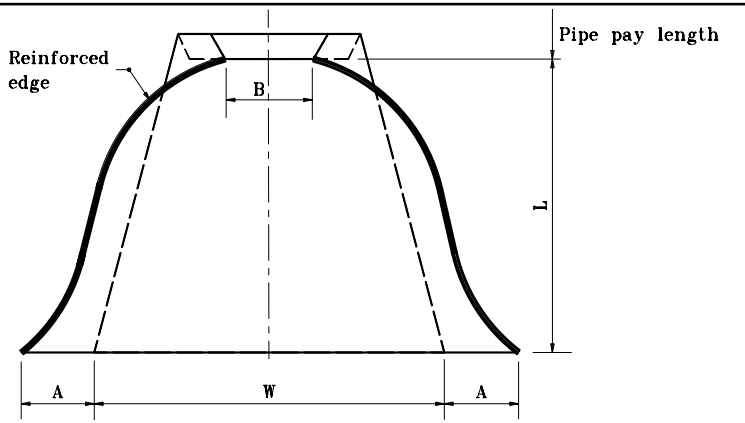

PLAN VIEW

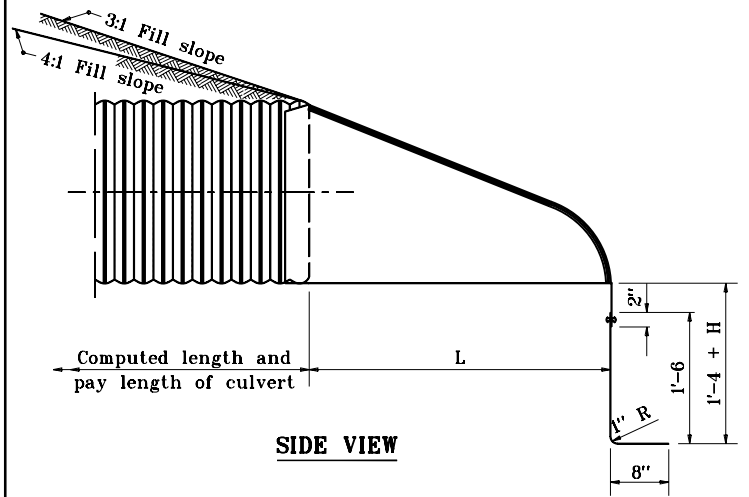

SIDE VIEW

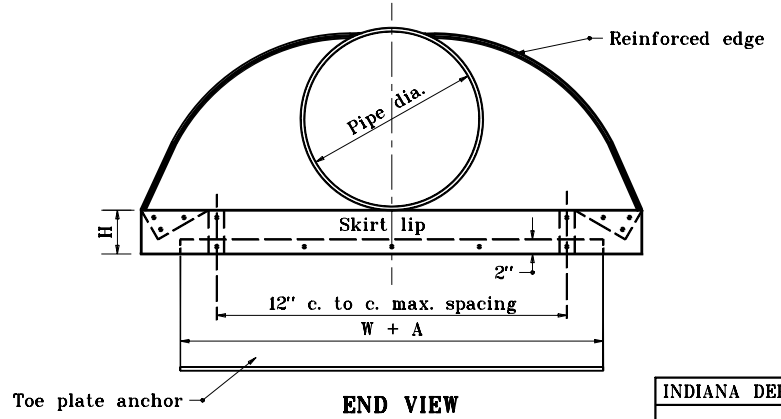

END VIEW

INDIANA DEPARTMENT OF TRANSPORTATION

METAL PIPE END SECTION

JANUARY 1998

STANDARD DRAWING NO. E 715-MPES-01

ANTHONY L. UREMOVICH REGISTERED No. 18095 STATE OF INDIANA PROFESSIONAL ENGINEER

DESIGN STANDARDS ENGINEER

DETAILS PLACED IN THIS FORMAT 11-15-99

/s/ Anthony L. Uremovich 11-15-99
DESIGN STANDARDS ENGINEER DATE

/s/ Firooz Zandi 11-15-99
CHIEF HIGHWAY ENGINEER DATE

ORIGINALLY APPROVED 1-02-98

PIPE-ARCH DIMENSIONS		END SECTION THICK. (in.)	DIMENSIONS					APPROX. SLOPE	BODY
			A	B	H	L	W		
SPAN	RISE		(±1")	(Max.)	(± 1")	(±1½")	(±2")		
17	13	.064	7	9	6	19	30	2½:1	1 Pc.
21	15	.064	7	10	6	23	36	2½:1	1 Pc.
24	18	.064	8	12	6	28	42	2½:1	1 Pc.
28	20	.064	9	14	6	32	48	2½:1	1 Pc.
35	24	.079	10	16	8	39	60	2½:1	1 Pc.
42	29	.079	12	18	9	46	75	2½:1	1 Pc.

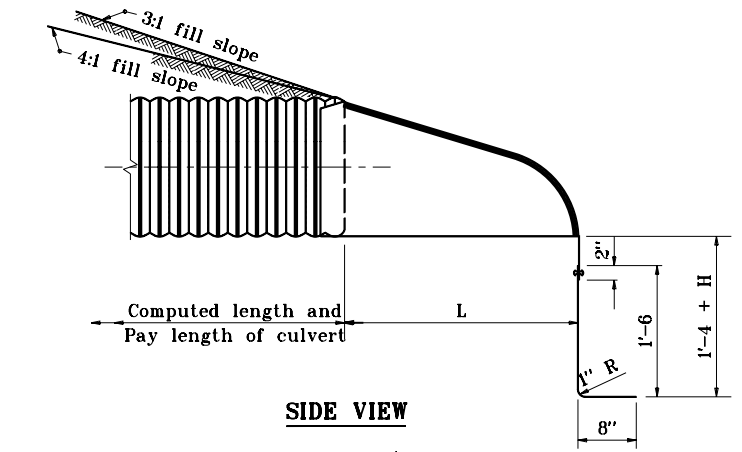

SIDE VIEW

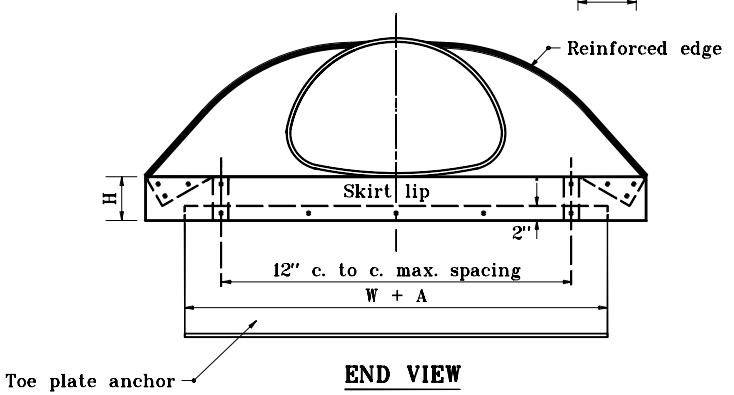

END VIEW

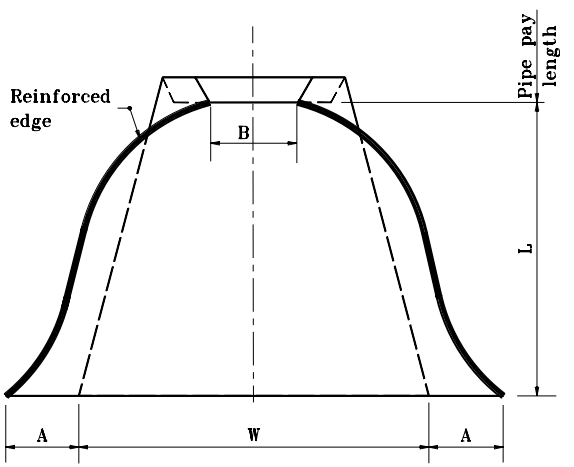

PLAN VIEW

INDIANA DEPARTMENT OF TRANSPORTATION

METAL PIPE ARCH END SECTION

JANUARY 1998

STANDARD DRAWING NO. E 715-MPES-02

ANTHONY L. UREMOVICH REGISTERED No. 18095 STATE OF INDIANA PROFESSIONAL ENGINEER

DESIGN STANDARDS ENGINEER

DETAILS PLACED IN THIS FORMAT 11-15-99

/s/ Anthony L. Uremovich 11-15-99
DESIGN STANDARDS ENGINEER DATE

/s/ Firooz Zandi 11-15-99
CHIEF HIGHWAY ENGINEER DATE

ORIGINALLY APPROVED 1-02-98

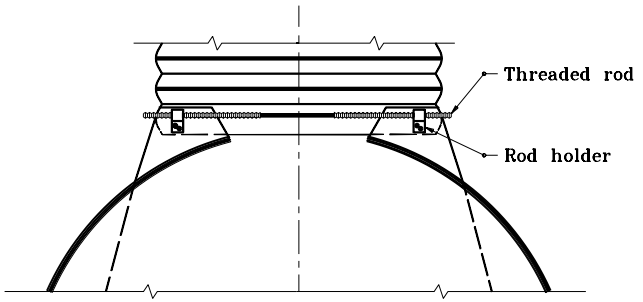

TYPE 1
FOR 17" x 13" THROUGH 42" x 29" ONLY

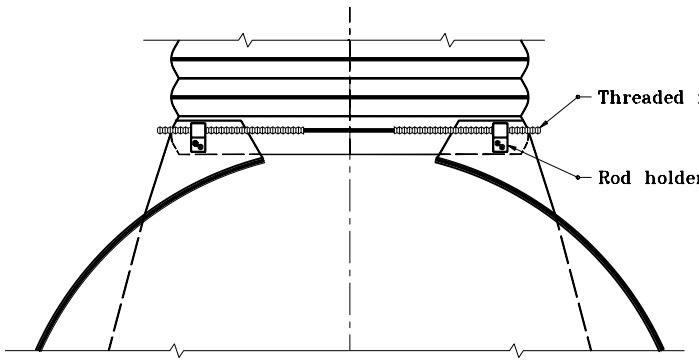

TYPE 4
FOR 30" THROUGH 36" ONLY

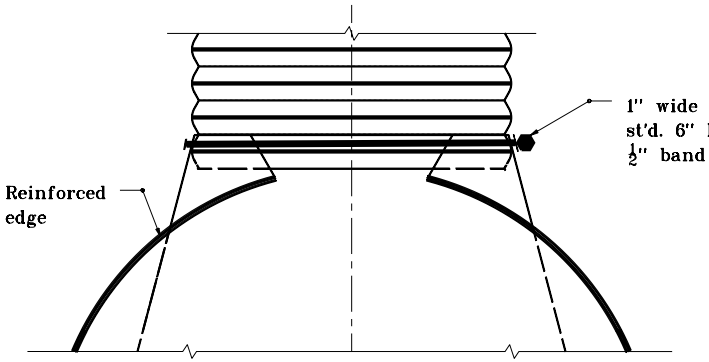

ALTERNATE TYPE 3
FOR 12" THROUGH 24" ONLY

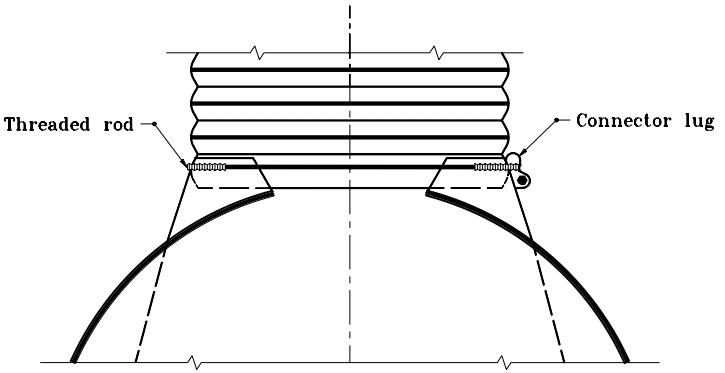

TYPE 3
FOR 12" THROUGH 24" ONLY

INDIANA DEPARTMENT OF TRANSPORTATION

METAL PIPE
END SECTION CONNECTIONS

JANUARY 1998

STANDARD DRAWING NO. **E 715-MPES-03**

ANTHONY L. UREMOVICH REGISTERED No. 18095 STATE OF INDIANA PROFESSIONAL ENGINEER

DESIGN STANDARDS ENGINEER

DETAILS PLACED IN THIS FORMAT 7-27-99

/s/ Anthony L. Uremovich 7-27-99
DESIGN STANDARDS ENGINEER DATE

/s/ Firooz Zandi 7-27-99
CHIEF HIGHWAY ENGINEER DATE

ORIGINALLY APPROVED 1-02-98

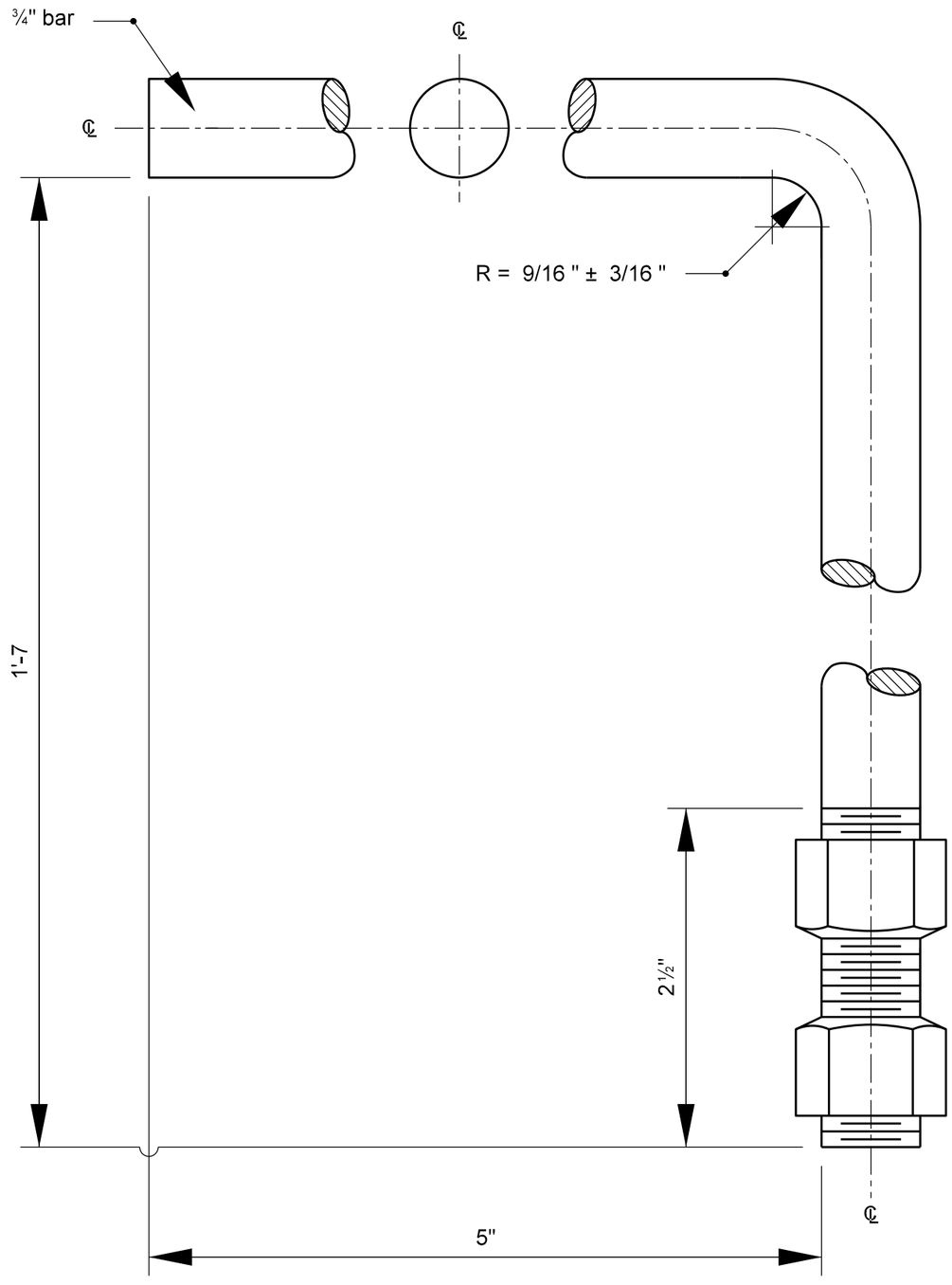

GALVANIZED
HOOK BOLT AND NUTS

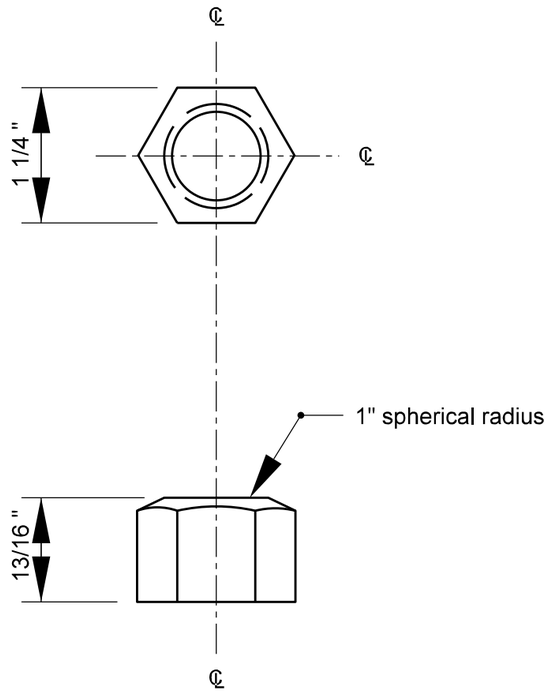

GENERAL NOTES

1. Hook bolts and anchor straps shall be used at both upstream and downstream ends of all C.A., C.S., and structural plate pipes and pipe diameter or span of 84" or greater.
2. See Standard Drawing E 715-PASD-01 for anchor strap details.

INDIANA DEPARTMENT OF TRANSPORTATION

PIPE ANCHOR HOOK
BOLT DETAILS

STANDARD DRAWING NO. E 715-PAHB-01

ANTHONY L. UREMOVICH REGISTERED No. 18095 STATE OF INDIANA PROFESSIONAL ENGINEER

DESIGN STANDARDS ENGINEER

APRIL 1995

DETAILS PLACED IN THIS FORMAT ON 7-27-95

/s/ Anthony L. Uremovich 7-27-99
DESIGN STANDARDS ENGINEER DATE

/s/ Firooz Zandi 7-27-99
CHIEF HIGHWAY ENGINEER DATE

ORIGINALLY APPROVED 4-01-95

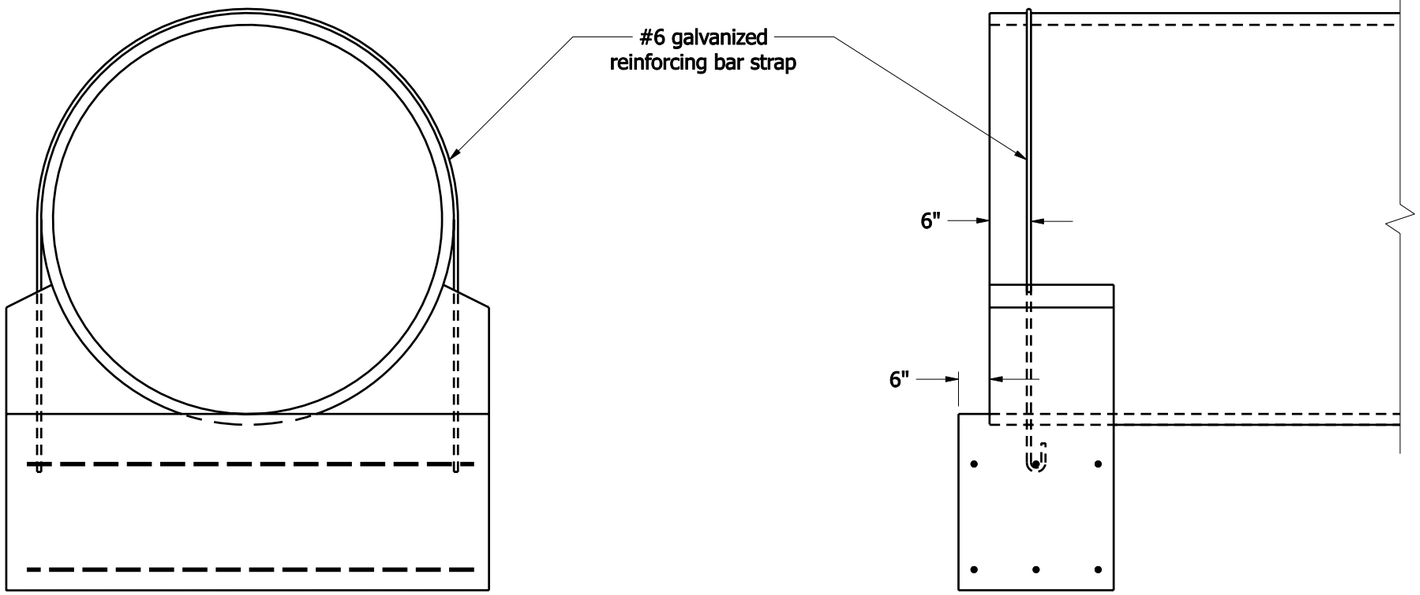

#6 REINFORCING BAR STRAP DETAILS

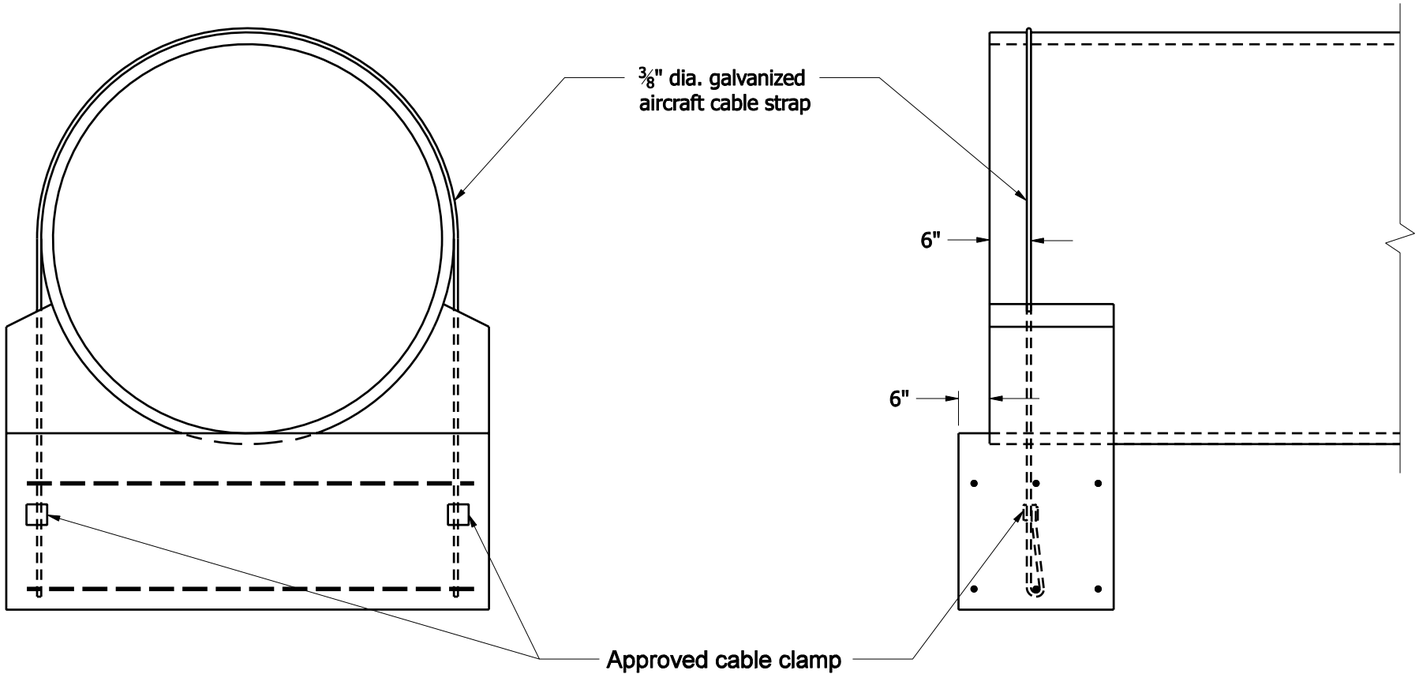

3/8" AIRCRAFT CABLE STRAP DETAILS

GENERAL NOTES

1. See Standard Drawing E 715-PAHB-01 for hook bolt details.

INDIANA DEPARTMENT OF TRANSPORTATION

PIPE ANCHOR STRAP DETAILS

SEPTEMBER 2008

STANDARD DRAWING NO. E 715- PASD-01

RICHARD L. VanCLEAVE REGISTERED No. 9750 STATE OF INDIANA PROFESSIONAL ENGINEER

DESIGN STANDARDS ENGINEER

/s/ Richard L. VanCleave 09/02/08
DESIGN STANDARDS ENGINEER — DATE

/s/ Mark A. Miller 09/02/08
CHIEF HIGHWAY ENGINEER — DATE

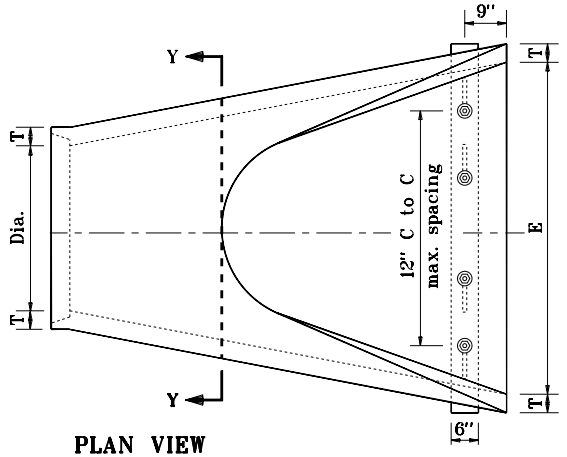

PLAN VIEW

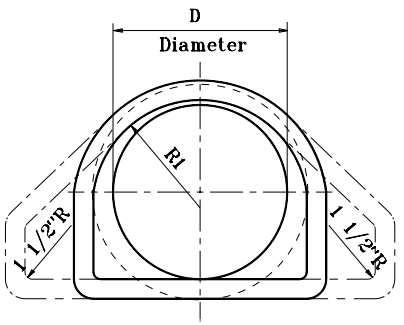

SECTION Y-Y

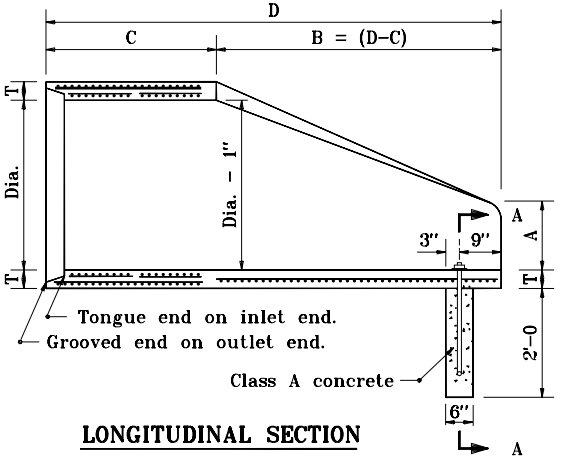

LONGITUDINAL SECTION

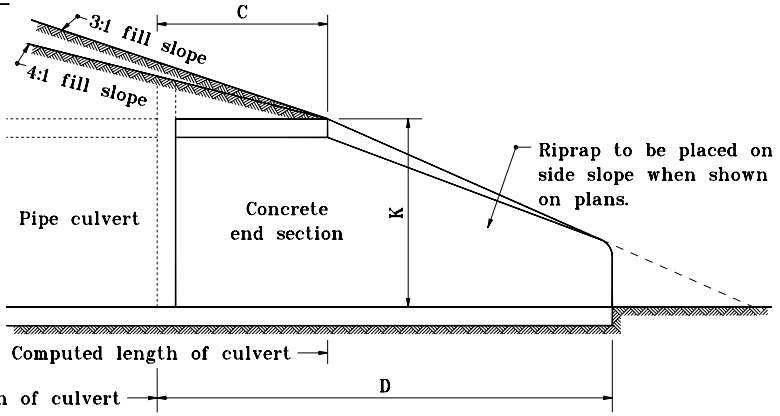

SLOPE DETAIL

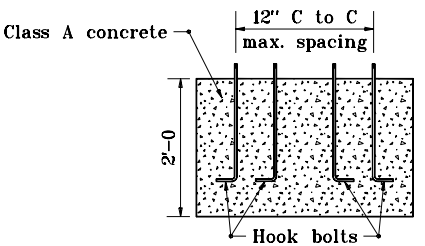

SECTION A-A

Concrete Pipe Toe Anchor

TABLE OF DIMENSIONS

DIA.	T (min.)	A (±1")	C (±1")	D (±1")	E (±1")	K	R1	R2	APPROX. WEIGHT, lb.
12"	2"	5"	4'-3	6'-2	2'-0	1.3	10 1/8"	9"	800
15"	2 1/4"	7"	4'-0	6'-3	2'-6	1.5	12 1/2"	11"	1100
18"	2 1/2"	11"	4'-1	6'-2	3'-0	1.8	15 1/2"	12"	1300
21"	2 3/4"	11"	3'-6	6'-3	3'-6	2.1	16 1/8"	13"	1500
24"	3"	1'-0	2'-8	6'-3	4'-0	2.3	16 3/16"	14"	1800
27"	3 1/4"	1'-1	2'-5	6'-3	4'-6	2.6	18 3/16"	14 1/2"	2100
30"	3 1/2"	1'-2	1'-10	6'-3	5'-0	2.9	18 1/2"	15"	2400
33"	3 3/4"	1'-3	3'-6	8'-3	5'-6	3.1	23 3/4"	17 1/2"	4100
36"	4"	1'-5	3'-1	8'-3	6'-0	3.4	24 5/16"	20"	4200

INDIANA DEPARTMENT OF TRANSPORTATION

PRECAST CONCRETE END SECTION

MAY 1998

STANDARD DRAWING NO. E 715-PCES-01

ANTHONY L. UREMOVICH REGISTERED No. 18095 STATE OF INDIANA PROFESSIONAL ENGINEER

DESIGN STANDARDS ENGINEER

DETAILS PLACED IN THIS FORMAT 11-15-99

/s/ Anthony L. Uremovich 11-15-99
DESIGN STANDARDS ENGINEER DATE

/s/ Firooz Zandi 11-15-99
CHIEF HIGHWAY ENGINEER DATE

ORIGINALLY APPROVED 5-01-98

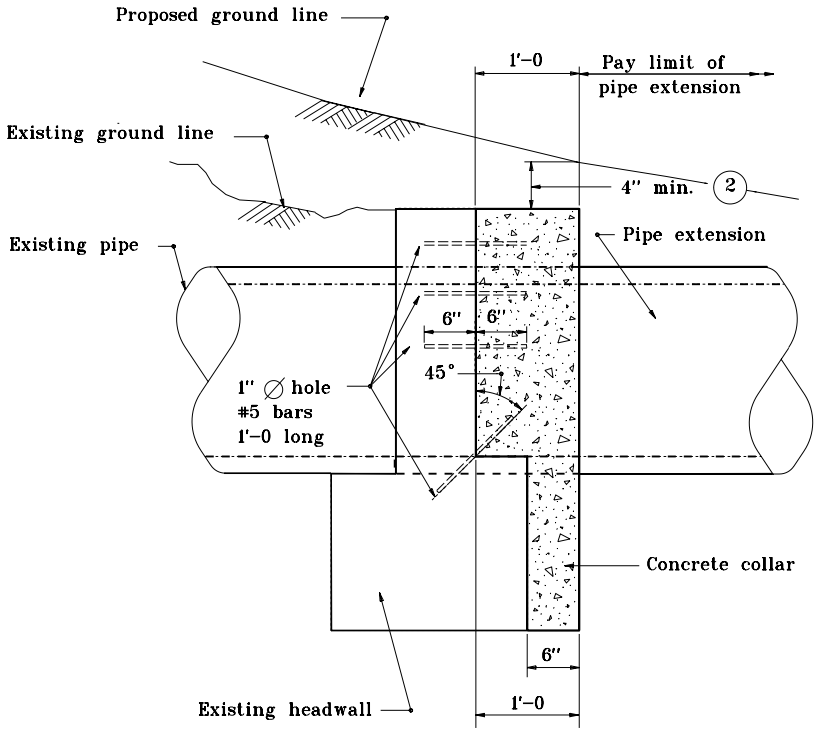

SIDE VIEW

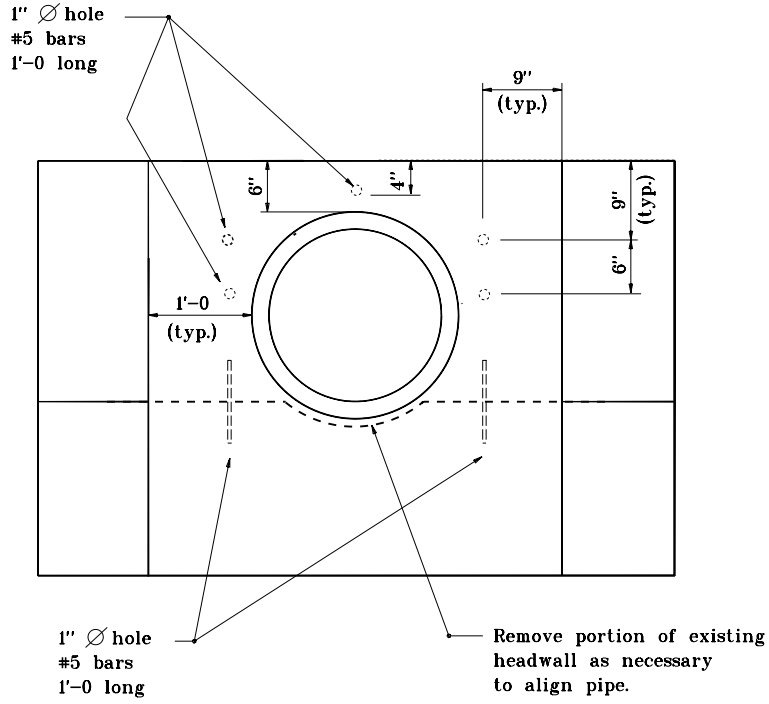

END VIEW

NOTES:

1. For other types of pipe end structures and pipes larger then 33" ∅, collar details are shown on the plans.

(2) Remove portions of existing headwall if required to maintain 4" ground cover.

INDIANA DEPARTMENT OF TRANSPORTATION

CONCRETE COLLAR FOR PIPE EXTENSION

JANUARY 1998

STANDARD DRAWING NO. **E 715-PCEX-01**

ANTHONY L. UREMOVICH REGISTERED No. 18095 STATE OF INDIANA PROFESSIONAL ENGINEER

DESIGN STANDARDS ENGINEER

DETAILS PLACED IN THIS FORMAT 7-27-99

/s/ Anthony L. Uremovich 7-27-99
DESIGN STANDARDS ENGINEER DATE

/s/ Firooz Zandi 7-27-99
CHIEF HIGHWAY ENGINEER DATE

ORIGINALLY APPROVED 1-02-98

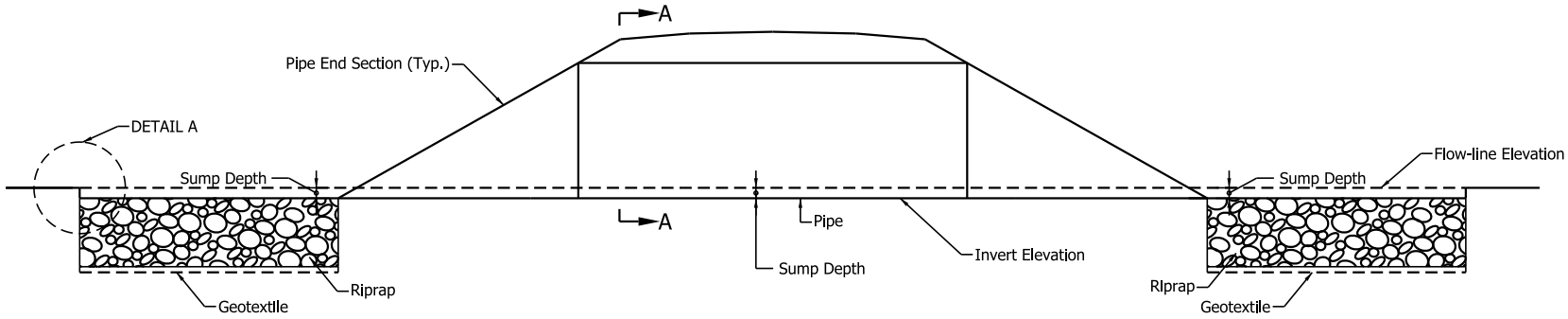

ELEVATION

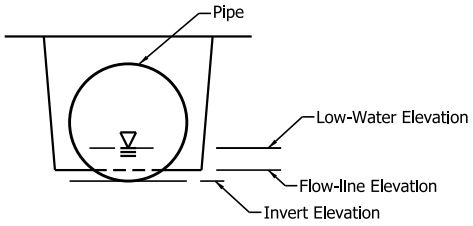

SECTION A-A

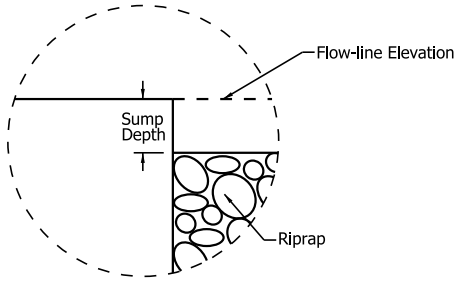

DETAIL A

INDIANA DEPARTMENT OF TRANSPORTATION

PIPE SUMPING PROTECTION

SEPTEMBER 2011

STANDARD DRAWING NO. E 715-PCSP-01

RICHARD L. VanCLEAVE REGISTERED No. 9750 STATE OF INDIANA PROFESSIONAL ENGINEER

DESIGN STANDARDS ENGINEER

/s/ Richard L.VanCleave 09/01/11

DESIGN STANDARDS ENGINEER DATE

/s/ Mark A. Miller 09/01/11

CHIEF HIGHWAY ENGINEER DATE

INDEX	
SHEET NO.	SUBJECT
01	Pipe Height of Cover Drawing Index and General Notes
02-04	2 2/3" x 1/2" Corrugated Aluminum Alloy Pipe and Pipe Arch Height of Cover Limits
05-07	3" x 1" Corrugated Aluminum Alloy Pipe and Pipe Arch Height of Cover Limits
08-09	6" x 1" Corrugated Aluminum Alloy Pipe Height of Cover Limits
10-12	2 2/3" x 1/2" Corrugated Steel Pipe and Pipe Arch Height of Cover Limits
13-15	3" x 1" Corrugated Steel Pipe and Pipe Arch Height of Cover Limits
16-17	5" x 1" Corrugated Steel Pipe and Pipe Arch Height of Cover Limits
18	3/4" x 3/4" x 7 1/2" Spiral Rib Steel Pipe Height of Cover Limits
19	Non-Reinforced Concrete Pipe Class 3 Height of Cover Limits
20	Corrugated Polyethylene Pipe Height of Cover Limits
21	Polyvinyl Chloride and Polypropylene Pipe Height of Cover Limits
22	Vitrified Clay Pipe Height of Cover Limits
23-24	Reinforced Concrete Pipe Height of Cover Limits

GENERAL NOTE:

1. The tabulated cover depth H shall be measured from the top of the pipe to the bottom of the drainage No. 8 layer for PCCP and from the top of the pipe to the top of the subgrade treatment for HMA pavement.

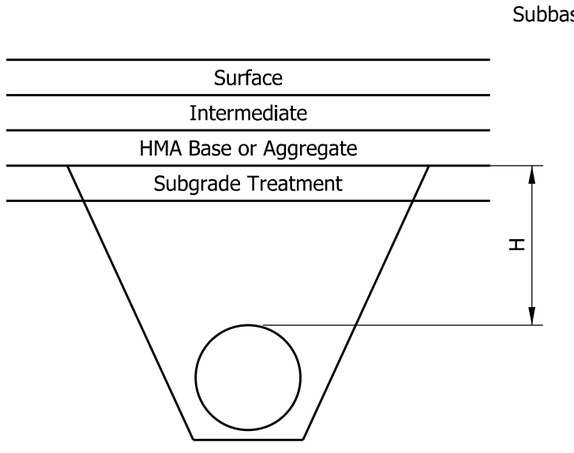

HMA

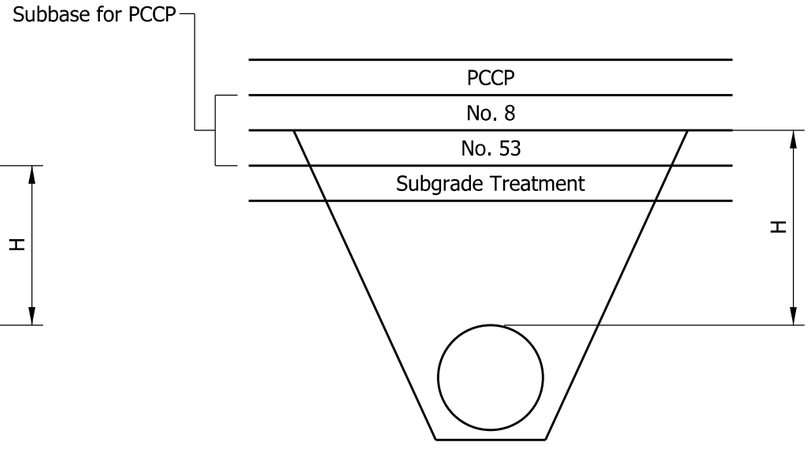

PCCP

INDIANA DEPARTMENT OF TRANSPORTATION

PIPE HEIGHT OF COVER LIMITS
DRAWING INDEX AND
GENERAL NOTES
SEPTEMBER 2026

STANDARD DRAWING NO. E 715-PHCL-01

ELIZABETH P. MOUSER REGISTERED No. 10200124 STATE OF INDIANA PROFESSIONAL ENGINEER

2/26/2026
DESIGN STANDARDS ENGINEER DATE

04/08/2026
CHIEF ENGINEER DATE

2 2/3" x 1/2" CORRUGATED ALUMINUM ALLOY PIPE (LOCK SEAM)
HEIGHT OF COVER LIMITS (ft)

AREA (sft)	DIAMETER (in.)	THICKNESS (in.)									
		0.060		0.075		0.105		0.135		0.164	
		MIN.	MAX.	MIN.	MAX.	MIN.	MAX.	MIN.	MAX.	MIN.	MAX.
0.8	12	1.0	100.0	1.0	100.0	1.0	100.0				
1.2	15	1.0	100.0	1.0	100.0	1.0	100.0				
1.8	18	1.0	100.0	1.0	100.0	1.0	100.0				
2.4	21	1.0	88.5	1.0	100.0	1.0	100.0				
3.1	24	1.0	77.5	1.0	96.8	1.0	100.0	1.0	100.0		
4.0	27	1.0	68.8	1.0	86.0	1.0	100.0	1.0	100.0		
4.9	30	1.0	62.0	1.0	77.4	1.0	100.0	1.0	100.0		
5.9	33			1.0	64.5	1.0	90.4	1.0	100.0		
7.1	36			1.0	64.5	1.0	90.4	1.0	100.0		
9.6	42					1.0	77.4	1.0	99.7		
12.6	48					1.0	66.7	1.0	86.6	1.0	100.0
15.9	54					1.0	54.4	1.0	70.8	1.0	87.6
19.6	60							1.0	57.6	1.0	71.6
23.8	66									1.0	57.7
28.3	72									1.0	45.5

INDIANA DEPARTMENT OF TRANSPORTATION

PIPE HEIGHT OF COVER LIMITS

SEPTEMBER 2017

STANDARD DRAWING NO. E 715-PHCL-02

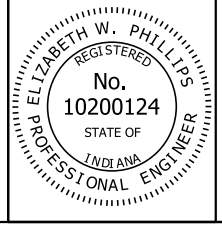

/s/ Elizabeth W. Phillips 03/27/17
DESIGN STANDARDS ENGINEER DATE

/s/ John Leckie 04/10/17
CHIEF ENGINEER DATE

2 2/3" x 1/2" CORRUGATED ALUMINUM ALLOY PIPE (RIVETED)
HEIGHT OF COVER LIMITS (ft)

AREA (sft)	DIAMETER (in.)	THICKNESS (in.)									
		0.060		0.075		0.105		0.135		0.164	
		MIN.	MAX.	MIN.	MAX.	MIN.	MAX.	MIN.	MAX.	MIN.	MAX.
0.8	12	1.0	50.0	1.0	50.0	1.0	86.6				
1.2	15	1.0	40.0	1.0	40.0	1.0	69.3				
1.8	18	1.0	33.3	1.0	33.3	1.0	57.7				
2.4	21	1.0	28.5	1.0	28.5	1.0	49.5				
3.1	24	1.0	25.0	1.0	25.0	1.0	43.3	1.0	45.0		
4.0	27	1.0	22.2	1.0	22.2	1.0	38.5	1.0	40.0		
4.9	30	1.1	20.0	1.1	20.0	1.0	34.6	1.0	36.0		
5.9	33			1.2	16.6	1.0	28.8	1.0	30.0		
7.1	36			1.2	16.6	1.0	28.8	1.0	30.0		
9.6	42					1.0	50.0	1.0	52.3		
12.6	48					1.0	43.7	1.0	45.8	1.0	47.2
15.9	54					1.0	38.8	1.0	40.7	1.0	41.9
19.6	60							1.0	36.6	1.0	37.7
23.8	66									1.0	34.3
28.3	72									1.0	31.4

INDIANA DEPARTMENT OF TRANSPORTATION

PIPE HEIGHT OF COVER LIMITS

SEPTEMBER 2017

STANDARD DRAWING NO. E 715-PHCL-03

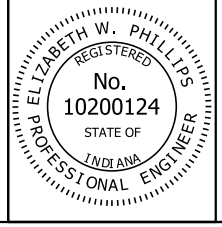

/s/ Elizabeth W. Phillips 03/27/17
DESIGN STANDARDS ENGINEER DATE

/s/ John Leckie 04/10/17
CHIEF ENGINEER DATE

2 2/3" x 1/2" CORRUGATED ALUMINUM ALLOY PIPE-ARCH (RIVETED OR LOCK SEAM)
HEIGHT OF COVER LIMITS (ft)

CORNER RADIUS (in.)	SPAN (in.)	RISE (in.)	AREA (sft)	THICKNESS (in.)									
				0.060		0.075		0.105		0.135		0.164	
				MIN.	MAX.	MIN.	MAX.	MIN.	MAX.	MIN.	MAX.	MIN.	MAX.
3 (Min.) 3 1/2 (Typ.)	17	13	1.1	1.5	13.7	1.5	13.7	1.5	13.7				
3 (Min.) 4 1/8 (Typ.)	21	15	1.6	1.6	13.0	1.6	13.0	1.6	13.0				
3 (Min.) 4 7/8 (Typ.)	24	18	2.2	1.5	13.5	1.5	13.5	1.5	13.5				
3 (Min.) 5 1/2 (Typ.)	28	20	2.9	1.6	13.0	1.6	13.0	1.6	13.0	1.6	13.0		
3 (Min.) 6 7/8 (Typ.)	35	24	4.5			1.6	13.0	1.6	13.0	1.6	13.0		
3 1/2 (Min.) 8 1/4 (Typ.)	42	29	6.5			1.6	13.0	1.6	13.0	1.6	13.0		
4 (Min.) 9 5/8 (Typ.)	49	33	8.9			1.6	13.0	1.6	13.0	1.6	13.0		
5 (Min.) 11 (Typ.)	57	38	11.6					1.6	12.8	1.6	12.8	1.6	12.8
6 (Min.) 12 3/8 (Typ.)	64	43	14.7							1.6	12.8	1.6	12.8
7 (Min.) 13 3/4 (Typ.)	71	47	18.1									1.6	12.9

NOTES:

1. Dual entries in the "Corner Radius" column such as 3 (Min.), 3 1/2 (Typ.), represent the following:
   3 (Min.) = Minimum corner radius allowed by AASHTO M 196
   3 1/2 (Typ.) = Corner radius typically available

2. The tabulated cover heights reflect pipe-arches with typically available corner radii. If a pipe-arch with corner radii other than what is typically available is to be used, a specific design shall be performed to verify structural adequacy.

INDIANA DEPARTMENT OF TRANSPORTATION

PIPE HEIGHT OF COVER LIMITS

SEPTEMBER 2017

STANDARD DRAWING NO. E 715-PHCL-04

ELIZABETH W. PHILLIPS REGISTERED No. 10200124 STATE OF INDIANA PROFESSIONAL ENGINEER

/s/ Elizabeth W. Phillips 03/27/17
DESIGN STANDARDS ENGINEER DATE

/s/ John Leckie 04/10/17
CHIEF ENGINEER DATE

3" x 1" CORRUGATED ALUMINUM ALLOY PIPE (LOCK SEAM)
HEIGHT OF COVER LIMITS (ft)

AREA (sft)	DIAMETER (in.)	THICKNESS (in.)									
		0.060		0.075		0.105		0.135		0.164	
		MIN.	MAX.	MIN.	MAX.	MIN.	MAX.	MIN.	MAX.	MIN.	MAX.
4.9	30	1.0	71.2	1.0	89.4	1.0	100.0	1.0	100.0		
5.9	33	1.0	59.3	1.0	74.5	1.0	100.0	1.0	100.0		
7.1	36	1.0	59.3	1.0	74.5	1.0	100.0	1.0	100.0		
9.6	42	1.0	50.8	1.0	63.8	1.0	89.1	1.0	100.0		
12.6	48	1.0	44.5	1.0	55.9	1.0	78.0	1.0	100.0	1.0	100.0
15.9	54	1.0	39.5	1.0	49.6	1.0	69.3	1.0	92.8	1.0	90.7
19.6	60	1.0	35.6	1.0	44.7	1.0	62.4	1.0	83.5	1.0	81.6
23.8	66	1.0	32.3	1.0	40.6	1.0	56.7	1.0	75.9	1.0	74.2
28.3	72			1.0	37.2	1.0	52.0	1.0	69.6	1.0	68.0
33.2	78			1.0	34.4	1.0	48.0	1.0	64.2	1.0	62.8
38.5	84					1.0	44.5	1.0	59.6	1.0	58.3
44.2	90					1.0	41.6	1.0	55.6	1.0	54.4
50.3	96					1.0	38.1	1.0	51.3	1.0	51.0
56.7	102							1.1	46.3	1.1	48.0
63.6	108							1.1	41.8	1.1	45.3
70.9	114									1.2	42.9
78.5	120									1.3	40.1

INDIANA DEPARTMENT OF TRANSPORTATION

PIPE HEIGHT OF COVER LIMITS

SEPTEMBER 2017

STANDARD DRAWING NO. E 715-PHCL-05

ELIZABETH W. PHILLIPS REGISTERED No. 10200124 STATE OF INDIANA PROFESSIONAL ENGINEER

/s/ Elizabeth W. Phillips 03/27/17
DESIGN STANDARDS ENGINEER DATE

/s/ John Leckie 04/10/17
CHIEF ENGINEER DATE

3" x 1" CORRUGATED ALUMINUM ALLOY PIPE (RIVETED)
HEIGHT OF COVER LIMITS (ft)

AREA (sft)	DIAMETER (in.)	THICKNESS (in.)									
		0.060		0.075		0.105		0.135		0.164	
		MIN.	MAX.	MIN.	MAX.	MIN.	MAX.	MIN.	MAX.	MIN.	MAX.
4.9	30	1.0	36.6	1.0	45.5	1.0	62.2	1.0	93.3		
5.9	33	1.0	30.5	1.0	37.9	1.0	51.8	1.0	77.7		
7.1	36	1.0	30.5	1.0	37.9	1.0	51.8	1.0	77.7		
9.6	42	1.0	26.1	1.0	32.5	1.0	44.4	1.0	66.6		
12.6	48	1.0	22.9	1.0	28.4	1.0	38.8	1.0	58.3	1.0	75.6
15.9	54	1.1	20.3	1.0	25.3	1.0	34.5	1.0	51.8	1.0	67.2
19.6	60	1.1	18.3	1.0	22.7	1.0	31.1	1.0	46.6	1.0	60.5
23.8	66	1.2	16.6	1.1	20.7	1.0	28.2	1.0	42.4	1.0	55.0
28.3	72			1.1	18.9	1.0	25.9	1.0	38.8	1.0	50.4
33.2	78			1.2	17.5	1.0	23.9	1.0	35.8	1.0	46.5
38.5	84					1.0	22.2	1.0	33.3	1.0	43.2
44.2	90					1.1	20.7	1.0	31.1	1.0	40.3
50.3	96					1.1	19.4	1.0	29.1	1.0	37.8
56.7	102							1.1	27.4	1.1	35.6
63.6	108							1.1	25.9	1.1	33.6
70.9	114									1.2	31.8
78.5	120									1.3	30.2

INDIANA DEPARTMENT OF TRANSPORTATION

PIPE HEIGHT OF COVER LIMITS

SEPTEMBER 2017

STANDARD DRAWING NO. E 715-PHCL-06

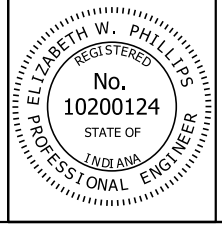

/s/ Elizabeth W. Phillips 03/27/17
DESIGN STANDARDS ENGINEER DATE

/s/ John Leckie 04/10/17
CHIEF ENGINEER DATE

3" x 1" CORRUGATED ALUMINUM ALLOY PIPE-ARCH (RIVETED OR LOCK SEAM)
HEIGHT OF COVER LIMITS (ft)

CORNER RADIUS (in.)	SPAN (in.)	RISE (in.)	AREA (sft)	THICKNESS (in.)									
				0.060		0.075		0.105		0.135		0.164	
				MIN.	MAX.	MIN.	MAX.	MIN.	MAX.	MIN.	MAX.	MIN.	MAX.
8 (Min.) 18 3/4 (Typ.)	60	46	15.6			1.1	20.8	1.1	20.8	1.1	20.8	1.1	20.8
9 (Min.) 20 3/4 (Typ.)	66	51	19.3			1.1	20.9	1.1	20.9	1.1	20.9	1.1	20.9
12 (Min.) 22 7/8 (Typ.)	73	55	23.2			1.1	20.8	1.1	20.8	1.1	20.8	1.1	20.8
14 (Min.) 20 7/8 (Typ.)	81	59	27.4					1.2	17.1	1.2	17.1	1.2	17.1
14 (Min.) 22 5/8 (Typ.)	87	63	32.1					1.2	17.3	1.2	17.3	1.2	17.3
16 (Min.) 24 3/8 (Typ.)	95	67	37.0							1.2	17.1	1.2	17.1
16 (Min.) 26 1/8 (Typ.)	103	71	42.4							1.2	16.9	1.2	16.9
18 (Min.) 27 3/4 (Typ.)	112	75	48.0									1.3	16.5

NOTES:

1. Dual entries in the "Corner Radius" column such as 8 (Min.), 18 3/4 (Typ.), represent the following:
   8 (Min.) = Minimum corner radius allowed by AASHTO M 196
   18 3/4 (Typ.) = Corner radius typically available

2. The tabulated cover heights reflect pipe-arches with typically available corner radii. If a pipe-arch with corner radii other than what is typically available is to be used, a specific design shall be performed to verify structural adequacy.

INDIANA DEPARTMENT OF TRANSPORTATION

PIPE HEIGHT OF COVER LIMITS

SEPTEMBER 2017

STANDARD DRAWING NO. E 715-PHCL-07

ELIZABETH W. PHILLIPS REGISTERED No. 10200124 STATE OF INDIANA PROFESSIONAL ENGINEER

/s/ Elizabeth W. Phillips 03/27/17
DESIGN STANDARDS ENGINEER DATE

/s/ John Leckie 04/10/17
CHIEF ENGINEER DATE

6" x 1" CORRUGATED ALUMINUM ALLOY PIPE (LOCK SEAM)
HEIGHT OF COVER LIMITS (ft)

AREA (sft)	DIAMETER (in.)	THICKNESS (in.)									
		0.060		0.075		0.105		0.135		0.164	
		MIN.	MAX.	MIN.	MAX.	MIN.	MAX.	MIN.	MAX.	MIN.	MAX.
12.6	48	1.0	38.7	1.0	48.4	1.0	67.8	1.0	87.2	1.0	100.0
15.9	54	1.0	34.4	1.0	43.0	1.0	60.2	1.0	77.5	1.0	94.8
19.6	60	1.0	31.0	1.0	38.7	1.0	54.2	1.0	69.7	1.0	85.3
23.8	66	1.0	28.1	1.0	35.2	1.0	49.3	1.0	63.4	1.0	77.5
28.3	72			1.0	32.2	1.0	45.2	1.0	58.1	1.0	71.1
33.2	78			1.0	29.7	1.0	41.7	1.0	53.6	1.0	65.6
38.5	84					1.0	38.7	1.0	49.8	1.0	60.9
44.2	90					1.0	36.1	1.0	46.5	1.0	56.8
50.3	96							1.0	43.6	1.0	53.3
56.7	102							1.1	40.0	1.1	49.0
63.6	108									1.1	44.5
70.9	114									1.2	40.3

INDIANA DEPARTMENT OF TRANSPORTATION

PIPE HEIGHT OF COVER LIMITS

SEPTEMBER 2017

STANDARD DRAWING NO. E 715-PHCL-08

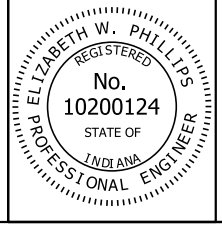

/s/ Elizabeth W. Phillips 03/27/17
DESIGN STANDARDS ENGINEER DATE

/s/ John Leckie 04/10/17
CHIEF ENGINEER DATE

6" x 1" CORRUGATED ALUMINUM ALLOY PIPE (RIVETED)
HEIGHT OF COVER LIMITS (ft)

AREA (sft)	DIAMETER (in.)	THICKNESS (in.)									
		0.060		0.075		0.105		0.135		0.164	
		MIN.	MAX.	MIN.	MAX.	MIN.	MAX.	MIN.	MAX.	MIN.	MAX.
12.6	48	1.0	22.2	1.0	26.3	1.0	38.7	1.0	49.8	1.0	60.4
15.9	54	1.1	19.7	1.0	23.4	1.0	34.4	1.0	44.3	1.0	53.7
19.6	60	1.2	17.7	1.1	21.1	1.0	31.0	1.0	39.8	1.0	48.3
23.8	66	1.3	16.1	1.1	19.1	1.0	28.1	1.0	36.2	1.0	43.9
28.3	72			1.2	17.5	1.0	25.8	1.0	33.2	1.0	40.2
33.2	78			1.3	16.2	1.0	23.8	1.0	30.6	1.0	37.1
38.5	84					1.0	22.1	1.0	28.4	1.0	34.5
44.2	90					1.1	20.6	1.0	26.5	1.0	32.2
50.3	96							1.0	24.9	1.0	30.2
56.7	102							1.1	23.4	1.1	28.4
63.6	108									1.1	26.8
70.9	114									1.2	25.4

INDIANA DEPARTMENT OF TRANSPORTATION

PIPE HEIGHT OF COVER LIMITS

SEPTEMBER 2017

STANDARD DRAWING NO. E 715-PHCL-09

ELIZABETH W. PHILLIPS REGISTERED No. 10200124 STATE OF INDIANA PROFESSIONAL ENGINEER

/s/ Elizabeth W. Phillips 03/27/17
DESIGN STANDARDS ENGINEER DATE

/s/ John Leckie 04/10/17
CHIEF ENGINEER DATE

2 2/3" x 1/2" CORRUGATED STEEL PIPE (LOCK SEAM)
HEIGHT OF COVER LIMITS (ft)

AREA (sft)	DIAMETER (in.)	THICKNESS (in.)									
		0.064		0.079		0.109		0.138		0.168	
		MIN.	MAX.	MIN.	MAX.	MIN.	MAX.	MIN.	MAX.	MIN.	MAX.
0.8	12	1.0	100.0	1.0	100.0						
1.2	15	1.0	100.0	1.0	100.0	1.0	100.0				
1.8	18	1.0	100.0	1.0	100.0	1.0	100.0				
2.4	21	1.0	100.0	1.0	100.0	1.0	100.0				
3.1	24	1.0	100.0	1.0	100.0	1.0	100.0				
4.0	27	1.0	94.7	1.0	100.0	1.0	100.0				
4.9	30	1.0	85.2	1.0	100.0	1.0	100.0	1.0	100.0		
5.9	33	1.0	71.0	1.0	88.7	1.0	100.0	1.0	100.0		
7.1	36	1.0	71.0	1.0	88.7	1.0	100.0	1.0	100.0	1.0	100.0
9.6	42	1.0	60.8	1.0	76.0	1.0	100.0	1.0	100.0	1.0	100.0
12.6	48	1.0	53.2	1.0	66.5	1.0	93.2	1.0	100.0	1.0	100.0
15.9	54			1.0	59.1	1.0	82.8	1.0	100.0	1.0	100.0
19.6	60					1.0	87.8	1.0	95.9	1.0	100.0
23.8	66							1.0	87.2	1.0	100.0
28.3	72							1.0	79.9	1.0	97.0
33.2	78									1.0	86.7
38.5	84									1.0	75.1

INDIANA DEPARTMENT OF TRANSPORTATION

PIPE HEIGHT OF COVER LIMITS

SEPTEMBER 2017

STANDARD DRAWING NO. E 715-PHCL-10

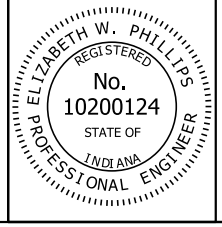

/s/ Elizabeth W. Phillips 03/27/17
DESIGN STANDARDS ENGINEER DATE

/s/ John Leckie 04/10/17
CHIEF ENGINEER DATE

2 2/3" x 1/2" CORRUGATED STEEL PIPE (RIVETED)
HEIGHT OF COVER LIMITS (ft)

AREA (sft)	DIAMETER (in.)	THICKNESS (in.)									
		0.064		0.079		0.109		0.138		0.168	
		MIN.	MAX.	MIN.	MAX.	MIN.	MAX.	MIN.	MAX.	MIN.	MAX.
0.8	12	1.0	92.7	1.0	100.0						
1.2	15	1.0	74.2	1.0	80.8	1.0	100.0				
1.8	18	1.0	61.8	1.0	67.4	1.0	86.6				
2.4	21	1.0	53.0	1.0	57.7	1.0	74.2				
3.1	24	1.0	46.3	1.0	50.5	1.0	65.0				
4.0	27	1.0	41.2	1.0	44.9	1.0	57.7				
4.9	30	1.0	37.1	1.0	40.4	1.0	52.0	1.0	54.4		
5.9	33	1.0	30.9	1.0	33.7	1.0	43.3	1.0	45.3		
7.1	36	1.0	30.9	1.0	33.7	1.0	43.3	1.0	45.3	1.0	47.4
9.6	42	1.0	34.2	1.0	47.3	1.0	74.2	1.0	77.7	1.0	81.4
12.6	48	1.0	30.0	1.0	41.3	1.0	65.0	1.0	68.0	1.0	71.2
15.9	54			1.0	36.7	1.0	57.7	1.0	60.4	1.0	63.3
19.6	60					1.0	52.0	1.0	54.4	1.0	57.0
23.8	66							1.0	49.4	1.0	51.8
28.3	72							1.0	45.3	1.0	47.5
33.2	78									1.0	43.8
38.5	84									1.0	40.7

INDIANA DEPARTMENT OF TRANSPORTATION

PIPE HEIGHT OF COVER LIMITS

SEPTEMBER 2017

STANDARD DRAWING NO. E 715-PHCL-11

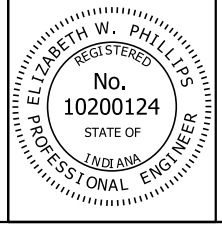

/s/ Elizabeth W. Phillips 03/27/17
DESIGN STANDARDS ENGINEER DATE

/s/ John Leckie 04/10/17
CHIEF ENGINEER DATE

2 2/3" x 1/2" CORRUGATED STEEL PIPE-ARCH (RIVETED OR LOCK SEAM)
HEIGHT OF COVER LIMITS (ft)

CORNER RADIUS (in.)	SPAN (in.)	RISE (in.)	AREA (sft)	THICKNESS (in.)									
				0.064		0.079		0.109		0.138		0.168	
				MIN.	MAX.	MIN.	MAX.	MIN.	MAX.	MIN.	MAX.	MIN.	MAX.
3 (Min.) 3 1/2 (Typ.)	17	13	1.1	1.5	13.7	1.5	13.7	1.5	13.7				
3 (Min.) 4 1/8 (Typ.)	21	15	1.6	1.6	13.0	1.6	13.0	1.6	13.0				
3 (Min.) 4 7/8 (Typ.)	24	18	2.2	1.5	13.5	1.5	13.5	1.5	13.5				
3 (Min.) 5 1/2 (Typ.)	28	20	2.9	1.6	13.0	1.6	13.0	1.6	13.0				
3 (Min.) 6 7/8 (Typ.)	35	24	4.5	1.6	13.0	1.6	13.0	1.6	13.0	1.6	13.0		
3 1/2 (Min.) 8 1/4 (Typ.)	42	29	6.5	1.6	13.0	1.6	13.0	1.6	13.0	1.6	13.0	1.6	13.0
4 (Min.) 9 5/8 (Typ.)	49	33	8.9			1.6	13.0	1.6	13.0	1.6	13.0	1.6	13.0
5 (Min.) 11 (Typ.)	57	38	11.6					1.6	12.8	1.6	12.8	1.6	12.8
6 (Min.) 12 3/8 (Typ.)	64	43	14.7					1.6	12.8	1.6	12.8	1.6	12.8
7 (Min.) 13 3/4 (Typ.)	71	47	18.1							1.6	12.9	1.6	12.9
8 (Min.) 15 1/8 (Typ.)	77	52	21.9									1.6	13.0
9 (Min.) 16 1/2 (Typ.)	83	57	26.0									1.5	13.2

NOTES:

1. Dual entries in the "Corner Radius" column such as 3 (Min.), 3 1/2 (Typ.), represent the following:
   3 (Min.) = Minimum corner radius allowed by AASHTO M 196
   3 1/2 (Typ.) = Corner radius typically available

2. The tabulated cover heights reflect pipe-arches with typically available corner radii. If a pipe-arch with corner radii other than what is typically available is to be used, a specific design shall be performed to verify structural adequacy.

INDIANA DEPARTMENT OF TRANSPORTATION

PIPE HEIGHT OF COVER LIMITS

SEPTEMBER 2017

STANDARD DRAWING NO. E 715-PHCL-12

ELIZABETH W. PHILLIPS REGISTERED No. 10200124 STATE OF INDIANA PROFESSIONAL ENGINEER

/s/ Elizabeth W. Phillips 03/27/17
DESIGN STANDARDS ENGINEER DATE

/s/ John Leckie 04/10/17
CHIEF ENGINEER DATE

3" x 1" CORRUGATED STEEL PIPE (LOCK SEAM)
HEIGHT OF COVER LIMITS (ft)

AREA (sft)	DIAMETER (in.)	THICKNESS (in.)									
		0.064		0.079		0.109		0.138		0.168	
		MIN.	MAX.	MIN.	MAX.	MIN.	MAX.	MIN.	MAX.	MIN.	MAX.
7.1	36	1.0	81.5								
9.6	42	1.0	69.9	1.0	87.4	1.0	100.0	1.0	100.0		
12.6	48	1.0	61.1	1.0	76.5	1.0	100.0	1.0	100.0		
15.9	54	1.0	54.3	1.0	68.0	1.0	95.3	1.0	100.0	1.0	100.0
19.6	60	1.0	48.9	1.0	61.2	1.0	85.8	1.0	100.0	1.0	100.0
23.8	66	1.0	44.5	1.0	55.6	1.0	78.0	1.0	100.0	1.0	100.0
28.3	72	1.0	40.7	1.0	51.0	1.0	71.5	1.0	92.0	1.0	100.0
33.2	78	1.0	37.6	1.0	47.0	1.0	66.0	1.0	84.9	1.0	100.0
38.5	84	1.0	34.9	1.0	43.7	1.0	61.2	1.0	78.8	1.0	96.5
44.2	90	1.0	32.6	1.0	40.8	1.0	57.2	1.0	73.6	1.0	90.1
50.3	96			1.0	38.2	1.0	53.6	1.0	69.0	1.0	84.4
56.7	102			1.1	36.0	1.1	50.4	1.1	64.9	1.1	79.5
63.6	108					1.1	47.6	1.1	61.3	1.1	75.1
70.9	114					1.2	45.1	1.2	58.1	1.2	71.1
78.5	120					1.3	42.9	1.3	55.2	1.3	67.5
86.6	126							1.3	52.5	1.3	64.3
95.0	132							1.4	50.2	1.4	61.4
103.9	138							1.4	48.0	1.4	58.7
113.1	144									1.5	56.3

INDIANA DEPARTMENT OF TRANSPORTATION

PIPE HEIGHT OF COVER LIMITS

SEPTEMBER 2017

STANDARD DRAWING NO. E 715-PHCL-13

ELIZABETH W. PHILLIPS REGISTERED No. 10200124 STATE OF INDIANA PROFESSIONAL ENGINEER

/s/ Elizabeth W. Phillips 03/27/17
DESIGN STANDARDS ENGINEER DATE

/s/ John Leckie 04/10/17
CHIEF ENGINEER DATE

3" x 1" CORRUGATED STEEL PIPE (RIVETED)
HEIGHT OF COVER LIMITS (ft)

AREA (sft)	DIAMETER (in.)	THICKNESS (in.)									
		0.064		0.079		0.109		0.138		0.168	
		MIN.	MAX.	MIN.	MAX.	MIN.	MAX.	MIN.	MAX.	MIN.	MAX.
7.1	36	1.0	53.1								
9.6	42	1.0	45.5	1.0	56.6	1.0	84.1	1.0	100.0		
12.6	48	1.0	39.8	1.0	49.5	1.0	73.6	1.0	88.4		
15.9	54	1.0	35.4	1.0	44.0	1.0	65.4	1.0	78.6	1.0	87.2
19.6	60	1.0	31.8	1.0	39.6	1.0	58.8	1.0	70.7	1.0	78.5
23.8	66	1.0	28.9	1.0	36.0	1.0	53.5	1.0	64.3	1.0	71.4
28.3	72	1.0	26.5	1.0	33.0	1.0	49.0	1.0	58.9	1.0	65.4
33.2	78	1.0	24.5	1.0	30.5	1.0	45.2	1.0	54.4	1.0	60.4
38.5	84	1.0	22.7	1.0	28.3	1.0	42.0	1.0	50.5	1.0	56.1
44.2	90	1.1	21.2	1.0	26.4	1.0	39.2	1.0	47.1	1.0	52.3
50.3	96			1.0	24.7	1.0	36.8	1.0	44.2	1.0	49.0
56.7	102			1.1	23.3	1.1	34.6	1.1	41.6	1.1	46.2
63.6	108					1.1	32.7	1.1	39.3	1.1	43.6
70.9	114					1.2	30.9	1.2	37.2	1.2	41.3
78.5	120					1.3	29.4	1.3	35.3	1.3	39.2
86.6	126							1.3	33.7	1.3	37.4
95.0	132							1.4	32.1	1.4	35.7
103.9	138							1.4	30.7	1.4	34.1
113.1	144									1.5	32.7

INDIANA DEPARTMENT OF TRANSPORTATION

PIPE HEIGHT OF COVER LIMITS

SEPTEMBER 2017

STANDARD DRAWING NO. E 715-PHCL-14

ELIZABETH W. PHILLIPS REGISTERED No. 10200124 STATE OF INDIANA PROFESSIONAL ENGINEER

/s/ Elizabeth W. Phillips 03/27/17
DESIGN STANDARDS ENGINEER DATE

/s/ John Leckie 04/10/17
CHIEF ENGINEER DATE

3" x 1" CORRUGATED STEEL PIPE-ARCH (RIVETED OR LOCK SEAM)
HEIGHT OF COVER LIMITS (ft)

CORNER RADIUS (in.)	SPAN (in.)	RISE (in.)	AREA (sft)	THICKNESS (in.)									
				0.064		0.079		0.109		0.138		0.168	
				MIN.	MAX.	MIN.	MAX.	MIN.	MAX.	MIN.	MAX.	MIN.	MAX.
8 (Min.) 18 3/4 (Typ.)	60	46	15.6			1.1	20.8	1.1	20.8	1.1	20.8	1.1	20.8
9 (Min.) 20 3/4 (Typ.)	66	51	19.3			1.1	20.9	1.1	20.9	1.1	20.9	1.1	20.9
12 (Min.) 22 7/8 (Typ.)	73	55	23.2			1.1	20.8	1.1	20.8	1.1	20.8	1.1	20.8
14 (Min.) 20 7/8 (Typ.)	81	59	27.4			1.2	17.1	1.2	17.1	1.2	17.1	1.2	17.1
14 (Min.) 22 5/8 (Typ.)	87	63	32.1			1.2	17.3	1.2	17.3	1.2	17.3	1.2	17.3
16 (Min.) 24 3/8 (Typ.)	95	67	37.0			1.2	17.1	1.2	17.1	1.2	17.1	1.2	17.1
16 (Min.) 26 1/8 (Typ.)	103	71	42.4					1.2	16.9	1.2	16.9	1.2	16.9
18 (Min.) 27 3/4 (Typ.)	112	75	48.0					1.3	16.5	1.3	16.5	1.3	16.5
18 (Min.) 29 1/2 (Typ.)	117	79	59.2					1.2	16.8	1.2	16.8	1.2	16.8
18 (Min.) 31 1/4 (Typ.)	128	83	60.5							1.3	16.2	1.3	16.2
18 (Min.) 33 (Typ.)	137	87	67.4							1.3	16.0	1.3	16.0
18 (Min.) 34 3/4 (Typ.)	142	91	74.5									1.3	16.3

NOTES:

1. Dual entries in the "Corner Radius" column such as 8 (Min.), 18 3/4 (Typ.), represent the following:
   8 (Min.) = Minimum corner radius allowed by AASHTO M 196
   18 3/4 (Typ.) = Corner radius typically available

2. The tabulated cover heights reflect pipe-arches with typically available corner radii. If a pipe-arch with corner radii other than what is typically available is to be used, a specific design shall be performed to verify structural adequacy.

INDIANA DEPARTMENT OF TRANSPORTATION

PIPE HEIGHT OF COVER LIMITS

SEPTEMBER 2017

STANDARD DRAWING NO. E 715-PHCL-15

ELIZABETH W. PHILLIPS REGISTERED No. 10200124 STATE OF INDIANA PROFESSIONAL ENGINEER

/s/ Elizabeth W. Phillips 03/27/17
DESIGN STANDARDS ENGINEER DATE

/s/ John Leckie 04/10/17
CHIEF ENGINEER DATE

5" x 1" CORRUGATED STEEL PIPE (LOCK SEAM)
HEIGHT OF COVER LIMITS (ft)

AREA (sft)	DIAMETER (in.)	THICKNESS (in.)									
		0.064		0.079		0.109		0.138		0.168	
		MIN.	MAX.	MIN.	MAX.	MIN.	MAX.	MIN.	MAX.	MIN.	MAX.
7.1	36			1.0	90.9	1.0	100.0				
9.6	42			1.0	77.9	1.0	100.0				
12.6	48	1.0	54.5	1.0	68.2	1.0	95.5	1.0	100.0		
15.9	54	1.0	48.5	1.0	60.6	1.0	84.9	1.0	100.0		
19.6	60	1.0	43.6	1.0	54.5	1.0	76.4	1.0	98.3		
23.8	66	1.0	39.7	1.0	49.6	1.0	69.5	1.0	89.4		
28.3	72	1.0	36.3	1.0	45.4	1.0	63.7	1.0	81.9	1.0	100.0
33.2	78	1.0	33.5	1.0	41.9	1.0	58.8	1.0	75.6	1.0	92.4
38.5	84	1.0	31.1	1.0	38.9	1.0	54.6	1.0	70.2	1.0	85.8
44.2	90	1.0	29.1	1.0	36.3	1.0	50.9	1.0	65.5	1.0	80.1
50.3	96			1.0	34.1	1.0	47.7	1.0	61.4	1.0	75.1
56.7	102			1.1	32.0	1.1	44.9	1.1	57.8	1.1	70.7
63.6	108					1.1	42.4	1.1	54.6	1.1	66.7
70.9	114					1.2	40.2	1.2	51.7	1.2	63.2
78.5	120					1.3	38.2	1.3	49.1	1.3	60.1
86.6	126							1.3	46.8	1.3	57.2
95.0	132							1.4	44.7	1.4	54.6
103.9	138							1.4	42.7	1.4	52.2
113.1	144									1.5	50.0

INDIANA DEPARTMENT OF TRANSPORTATION

PIPE HEIGHT OF COVER LIMITS

SEPTEMBER 2017

STANDARD DRAWING NO. E 715-PHCL-16

ELIZABETH W. PHILLIPS REGISTERED No. 10200124 STATE OF INDIANA PROFESSIONAL ENGINEER

/s/ Elizabeth W. Phillips 03/27/17
DESIGN STANDARDS ENGINEER DATE

/s/ John Leckie 04/10/17
CHIEF ENGINEER DATE

5" x 1" CORRUGATED STEEL PIPE-ARCH (RIVETED OR LOCK SEAM)
HEIGHT OF COVER LIMITS (ft)

CORNER RADIUS (in.)	SPAN (in.)	RISE (in.)	AREA (sft)	THICKNESS (in.)									
				0.064		0.079		0.109		0.138		0.168	
				MIN.	MAX.	MIN.	MAX.	MIN.	MAX.	MIN.	MAX.	MIN.	MAX.
8 (Min.) 18 3/4 (Typ.)	60	46	15.6					1.1	20.8	1.1	20.8		
9 (Min.) 20 3/4 (Typ.)	66	51	19.3					1.1	20.9	1.1	20.9		
12 (Min.) 22 7/8 (Typ.)	73	55	23.2					1.1	20.8	1.1	20.8		
14 (Min.) 20 7/8 (Typ.)	81	59	27.4					1.2	17.1	1.2	17.1	1.2	17.1
14 (Min.) 22 5/8 (Typ.)	87	63	32.1					1.2	17.3	1.2	17.3	1.2	17.3
16 (Min.) 24 3/8 (Typ.)	95	67	37.0					1.2	17.1	1.2	17.1	1.2	17.1
16 (Min.) 26 1/8 (Typ.)	103	71	42.4					1.2	16.9	1.2	16.9	1.2	16.9
18 (Min.) 27 3/4 (Typ.)	112	75	48.0					1.3	16.5	1.3	16.5	1.3	16.5
18 (Min.) 29 1/2 (Typ.)	117	79	54.2					1.2	16.8	1.2	16.8	1.2	16.8
18 (Min.) 31 1/4 (Typ.)	128	83	60.5							1.3	16.2	1.3	16.2
18 (Min.) 33 (Typ.)	137	87	67.4							1.3	16.0	1.3	16.0
18 (Min.) 34 3/4 (Typ.)	142	91	74.5									1.3	16.3

NOTES:

1. Dual entries in the "Corner Radius" column such as 8 (Min.), 18 3/4 (Typ.), represent the following:
   8 = Minimum corner radius allowed by AASHTO M 196
   18 3/4 = Corner radius typically available
2. The tabulated cover heights reflect pipe-arches with typically available corner radii. If a pipe-arch with corner radii other than what is typically available is to be used, a specific design shall be performed to verify structural adequacy.

INDIANA DEPARTMENT OF TRANSPORTATION

PIPE HEIGHT OF COVER LIMITS

SEPTEMBER 2017

STANDARD DRAWING NO. E 715-PHCL-17

ELIZABETH W. PHILLIPS REGISTERED No. 10200124 STATE OF INDIANA PROFESSIONAL ENGINEER

/s/ Elizabeth W. Phillips 03/27/17
DESIGN STANDARDS ENGINEER DATE

/s/ John Leckie 04/10/17
CHIEF ENGINEER DATE

3/4" x 3/4" x 7 1/2" SPIRAL RIB STEEL PIPE
HEIGHT OF COVER LIMITS (ft)

DIAMETER (in.)	THICKNESS (in.)					
	0.064		0.079		0.109	
	MIN.	MAX.	MIN.	MAX.	MIN.	MAX.
12	1.3	100.0	1.3	100.0	1.3	100.0
15	1.3	100.0	1.3	100.0	1.3	100.0
18	1.3	68.0	1.3	72.0	1.3	100.0
21	1.3	58.0	1.3	62.0	1.3	100.0
24	1.3	51.0	1.3	60.0	1.3	100.0
30	1.3	41.0	1.3	58.0	1.3	97.0
36	1.3	34.0	1.3	48.0	1.3	81.0
42	1.3	29.0	1.3	41.0	1.3	69.0
48	1.3	26.0	1.3	36.0	1.3	61.0
54	1.3	23.0	1.3	32.0	1.3	54.0
60			1.3	29.0	1.3	49.0
66			1.3	26.0	1.3	44.0
72			1.3	24.0	1.3	40.0
78					1.3	37.0
84					1.3	35.0
90					2.3	32.0
96					2.3	30.0
102					2.8	29.0
108					2.8	27.0

INDIANA DEPARTMENT OF TRANSPORTATION

PIPE HEIGHT OF COVER LIMITS

SEPTEMBER 2017

STANDARD DRAWING NO. E 715-PHCL-18

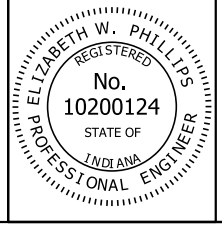

/s/ Elizabeth W. Phillips 03/27/17
DESIGN STANDARDS ENGINEER DATE

/s/ John Leckie 04/10/17
CHIEF ENGINEER DATE

NON-REINFORCED CONCRETE PIPE CLASS 3 HEIGHT OF COVER LIMITS (ft)		
DIAMETER (in.)	MINIMUM (ft)	MAXIMUM (ft)
12	1.3	14.1
15	1.4	13.1
18	1.5	12.8
21	1.5	13.4
24	1.5	13.5
27	1.6	12.1
30	1.8	10.7
33	1.9	9.8
36	2.1	9.0

INDIANA DEPARTMENT OF TRANSPORTATION

PIPE HEIGHT OF COVER LIMITS

SEPTEMBER 2017

STANDARD DRAWING NO. E 715-PHCL-19

ELIZABETH W. PHILLIPS REGISTERED No. 10200124 STATE OF INDIANA PROFESSIONAL ENGINEER

/s/ Elizabeth W. Phillips 03/27/17
DESIGN STANDARDS ENGINEER DATE

/s/ John Leckie 04/10/17
CHIEF ENGINEER DATE

CORRUGATED POLYETHYLENE PIPE TYPE S HEIGHT OF COVER LIMITS (ft)			
PAY ITEM DIAMETER (in.)	NOMINAL DIAMETER (in.)	MINIMUM (ft)	MAXIMUM (ft)
12	12	2.0	22.0
15	15	2.0	22.0
18	18	2.0	20.0
21	21	2.0	19.0
24	24	2.0	19.0
30	30	2.0	17.0
36	36	2.0	17.0
42	42	2.0	17.0
48	48	2.0	15.0

NOTE:

1. The pay item diameter reflects the minimum required inside diameter.

INDIANA DEPARTMENT OF TRANSPORTATION

PIPE HEIGHT OF COVER LIMITS

SEPTEMBER 2026

STANDARD DRAWING NO. E 715-PHCL-20

ELIZABETH P. MOUSER REGISTERED No. 10200124 STATE OF INDIANA PROFESSIONAL ENGINEER

2/26/2026
DESIGN STANDARDS ENGINEER DATE

04/08/2026
CHIEF ENGINEER DATE

PROFILE WALL POLYVINYL CHLORIDE PIPE HEIGHT OF COVER LIMITS (ft)		
DIAMETER (in.)	MINIMUM (ft)	MAXIMUM (ft)
12	2.0	20.0
15	2.0	20.0
18	2.0	20.0
21	2.0	20.0
24	2.0	20.0
30	2.0	18.0
36	2.0	18.0
42	2.0	17.0
48	2.0	15.0

CORRUGATED POLYPROPYLENE PIPE HEIGHT OF COVER LIMITS (ft)		
DIAMETER (in.)	MINIMUM (ft)	MAXIMUM (ft)
12	2.0	28.0
15	2.0	28.0
18	2.0	25.0
21	2.0	23.0
24	2.0	23.0
30	2.2	19.0
36	2.6	23.0
42	3.1	22.0
48	3.5	21.0

NOTE:

1. The pay item diameter reflects the minimum required inside diameter.

INDIANA DEPARTMENT OF TRANSPORTATION

PIPE HEIGHT OF COVER LIMITS

SEPTEMBER 2026

STANDARD DRAWING NO. E 715-PHCL-21

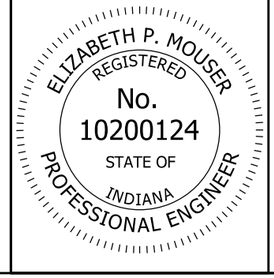

DESIGN STANDARDS ENGINEER — 2/26/2026 DATE

CHIEF ENGINEER — 04/08/2026 DATE

VITRIFIED CLAY PIPE, EXTRA STRENGTH HEIGHT OF COVER LIMITS (ft)		
DIAMETER (in.)	MINIMUM (ft)	MAXIMUM (ft)
12	1.2	16.0
15	1.4	14.0
18	1.4	13.0
21	1.4	14.0
24	1.4	15.0
27	1.5	14.0
30	1.6	13.0
33	1.5	13.0
36	1.5	14.0

INDIANA DEPARTMENT OF TRANSPORTATION

PIPE HEIGHT OF COVER LIMITS

SEPTEMBER **2026**

STANDARD DRAWING NO. E 715-PHCL-22

ELIZABETH P. MOUSER
REGISTERED
No.
10200124
STATE OF
INDIANA
PROFESSIONAL ENGINEER

2/26/2026
DESIGN STANDARDS ENGINEER DATE

04/08/2026
CHIEF ENGINEER DATE

REINFORCED CONCRETE CIRCULAR PIPE
HEIGHT OF COVER LIMITS (ft)

DIAMETER (in.)	STRENGTH CLASS / D-LOAD RATING							
	CLASS II: $D_{0.01}$ = 1000		CLASS III: $D_{0.01}$ = 1350		CLASS IV: $D_{0.01}$ = 2000		CLASS V: $D_{0.01}$ = 3000	
	MIN.	MAX.	MIN.	MAX.	MIN.	MAX.	MIN.	MAX.
12	1.0	12.0	1.0	17.0	1.0	25.0	1.0	38.0
15	1.0	13.0	1.0	17.0	1.0	26.0	1.0	39.0
18	1.0	13.0	1.0	17.0	1.0	26.0	1.0	40.0
21	1.0	13.0	1.0	17.0	1.0	26.0	1.0	40.0
24	1.0	13.0	1.0	17.0	1.0	26.0	1.0	40.0
27	1.0	13.0	1.0	17.0	1.0	26.0	1.0	40.0
30	1.0	13.0	1.0	17.0	1.0	26.0	1.0	40.0
33	1.0	12.0	1.0	17.0	1.0	26.0	1.0	40.0
36	1.0	12.0	1.0	17.0	1.0	26.0	1.0	40.0
42	1.0	12.0	1.0	17.0	1.0	26.0	1.0	40.0
48	1.0	12.0	1.0	17.0	1.0	26.0	1.0	40.0
54	1.0	12.0	1.0	17.0	1.0	26.0	1.0	40.0
60	1.0	12.0	1.0	17.0	1.0	26.0	1.0	40.0
66	1.0	12.0	1.0	17.0	1.0	26.0	1.0	39.0
72	1.0	12.0	1.0	17.0	1.0	25.0	1.0	39.0
78	1.0	12.0	1.0	17.0	1.0	25.0	1.0	39.0
84	1.0	12.0	1.0	16.0	1.0	25.0	1.0	39.0
90	1.0	12.0	1.0	16.0	1.0	25.0	1.0	39.0
96	1.0	11.0	1.0	16.0	1.0	25.0	1.0	39.0
102	1.0	9.0	1.0	16.0	1.0	25.0	1.0	39.0
108	1.0	9.0	1.0	16.0	1.0	25.0	1.0	39.0
114	1.0	9.0	1.0	16.0	1.0	25.0	1.0	39.0
120	1.0	9.0	1.0	16.0	1.0	25.0	1.0	39.0
126	1.0	9.0	1.0	16.0	1.0	25.0	1.0	39.0
132	1.0	9.0	1.0	16.0	1.0	25.0	1.0	39.0
138	1.0	9.0	1.0	16.0	1.0	25.0	1.0	39.0
144	1.0	9.0	1.0	15.0	1.0	25.0	1.0	39.0

NOTES:

1. A special design in accordance with AASHTO LRFD Bridge Design Specifications, Section 12, is required for pipe diameters and heights of cover beyond those shown.

INDIANA DEPARTMENT OF TRANSPORTATION

PIPE HEIGHT OF COVER LIMITS

SEPTEMBER 2026

STANDARD DRAWING NO. E 715-PHCL-23

ELIZABETH P. MOUSER
REGISTERED
No. 10200124
STATE OF INDIANA
PROFESSIONAL ENGINEER

Elizabeth P Mouser 2/26/2026
DESIGN STANDARDS ENGINEER DATE

04/08/2026
CHIEF ENGINEER DATE

REINFORCED CONCRETE HORIZONTAL ELLIPTICAL PIPE
HEIGHT OF COVER LIMITS (ft)

SPAN (in.)	RISE (in.)	AREA (sft)	STRENGTH CLASS / D-LOAD RATING									
			CLASS HE-A: $D_{0.01}$ = 600		CLASS HE-I: $D_{0.01}$ = 800		CLASS HE-II: $D_{0.01}$ = 1000		CLASS HE-III: $D_{0.01}$ = 1350		CLASS HE-IV: $D_{0.01}$ = 2000	
			MIN.	MAX.	MIN.	MAX.	MIN.	MAX.	MIN.	MAX.	MIN.	MAX.
23	14	1.8	1.3	4.0	1.0	8.0	1.0	11.0	1.0	20.0	1.0	100.0
30	19	3.3	1.1	5.0	1.0	7.0	1.0	10.0	1.0	16.0	1.0	47.0
34	22	4.1	1.0	5.0	1.0	8.0	1.0	11.0	1.0	17.0	1.0	48.0
38	24	5.1	1.0	5.0	1.0	8.0	1.0	11.0	1.0	18.0	1.0	49.0
42	27	6.3	1.0	6.0	1.0	9.0	1.0	12.0	1.0	19.0	1.0	50.0
45	29	7.4	1.0	6.0	1.0	9.0	1.0	12.0	1.0	19.0	1.0	45.0
49	32	8.8	1.0	6.0	1.0	9.0	1.0	12.0	1.0	19.0	1.0	45.0
53	34	10.2	1.0	6.0	1.0	9.0	1.0	12.0	1.0	20.0	1.0	44.0
60	38	12.9	1.0	5.0	1.0	8.0	1.0	10.0	1.0	15.0	1.0	26.0
68	43	16.6	1.0	6.0	1.0	8.0	1.0	10.0	1.0	15.0	1.0	27.0
76	48	20.5	1.0	6.0	1.0	8.0	1.0	11.0	1.0	16.0	1.0	28.0
83	53	24.8	1.0	6.0	1.0	9.0	1.0	11.0	1.0	16.0	1.0	29.0
91	58	29.5	1.0	6.0	1.0	9.0	1.0	12.0	1.0	17.0	1.0	29.0
98	63	34.6	1.1	6.0	1.1	9.0	1.1	12.0	1.1	17.0	1.1	29.0
106	68	40.1	1.2	6.0	1.2	9.0	1.2	12.0	1.2	17.0	1.2	30.0
113	72	46.1	1.2	7.0	1.2	9.0	1.2	12.0	1.2	18.0	1.2	30.0
121	77	52.4	1.3	7.0	1.3	9.0	1.3	12.0	1.3	18.0	1.3	30.0
128	82	59.2	1.4	7.0	1.4	10.0	1.4	13.0	1.4	18.0	1.4	30.0
136	87	66.4	1.5	7.0	1.5	10.0	1.5	13.0	1.5	18.0	1.5	31.0
143	92	74.0	1.5	7.0	1.5	10.0	1.5	13.0	1.5	18.0	1.5	31.0
151	97	82.0	1.6	7.0	1.6	10.0	1.6	13.0	1.6	19.0	1.6	31.0
166	106	99.2	1.7	7.0	1.8	10.0	1.8	13.0	1.8	19.0	1.8	31.0
180	116	118.6	1.8	7.0	1.9	10.0	1.9	13.0	1.9	19.0	1.9	31.0

INDIANA DEPARTMENT OF TRANSPORTATION

PIPE HEIGHT OF COVER LIMITS

SEPTEMBER 2026

STANDARD DRAWING NO. E 715-PHCL-24

ELIZABETH P. MOUSER REGISTERED No. 10200124 STATE OF INDIANA PROFESSIONAL ENGINEER

2/26/2026
DESIGN STANDARDS ENGINEER DATE

04/08/2026
CHIEF ENGINEER DATE

INDEX	
SHEET NO.	SUBJECT
1	Index and Pipe Classification Table
2	Miscellaneous Pipe Installation Details

Material	Pipe Type				
	1	2	3	4	5
Non-Reinforced Concrete Pipe, Class 3 (S)	x	x	x		
Non-Reinforced Concrete Pipe				x	
Reinforced Concrete Pipe (S)	x	x	x		
Reinforced Concrete Horizontal Elliptical Pipe (S)	x	x	x		
Corrugated Steel Pipe (C)	x		x		x
Polymer Precoated Galvanized Corrugated Steel Pipe (C)	x		x		x
Polymer Precoated Galvanized Corrugated Steel Pipe Type IA (S)	x	x	x		x
Fully Bituminous Coated and Lined Corrugated Steel Pipe (S)		x			x
Corrugated Steel Pipe-Arch (C)	x		x		x
Polymer Precoated Galvanized Corr. Steel Pipe Arch Type IIA (S)	x	x	x		x
Fully Bituminous Coated and Lined Corrugated Steel Pipe-Arch (S)		x			x
Polymer Precoated Galvanized Corrugated Steel Pipe-Arch (C)	x		x		x
Corrugated Aluminum Alloy Pipe (C)	x		x		x
Corrugated Aluminum Alloy Pipe-Arch (C)	x		x		x
Structural Plate Steel Pipe (C)	x		x		
Structural Plate Steel Pipe-Arch (C)	x		x		
Structural Plate Aluminum Alloy Pipe (C)	x		x		
Structural Plate Aluminum Alloy Pipe-Arch (C)	x		x		
Spiral Rib Steel Pipe (SS)	x		x		x
Clay Pipe, Extra Strength (S)	x	x	x		
Clay Pipe				x	
Perforated Clay Pipe				x	
Concrete Drain Tile				x	
Clay Drain Tile				x	
Corrugated Polyethylene Pipe, Type SP				x	
Corrugated Polyethylene Pipe, Type (S)	x	x	x	x	x
Corrugated Polyethylene Drainage Tubing				x	
Corrugated Polypropylene Pipe (S)	x	x	x		x
Profile Wall PVC Pipe (S)	x	x	x	x	x

NOTES:

1. The prescribed uses for the pipe types are as follows.
   a. Type 1 Pipe - Culverts under mainline pavement and public road approaches.
   b. Type 2 Pipe - Storm sewer pipe.
   c. Type 3 Pipe - Culverts under driveways and field entrances.
   d. Type 4 Pipe - Drain tile and longitudinal underdrains.
   e. Type 5 Pipe - Broken back and other installations requiring coupled pipe.

2. See to Standard Drawings E 715-PHCL-01 through E 715-PHCL-24 and E 717-PHCL-01 through E 717-PHCL-10 for allowable heights of cover for various pipe materials except Type 4 pipes.

3. See to Standard Drawings E 715-PSLC-01 through E 715-PSLC-03 for required pipe service life criteria.

4. Any pipe material which is in accordance with the designated pipe type, acceptable for height of cover conditions, and conforms to service life criteria may be installed.

LEGEND:

(C)- Corrugated Interior Culvert Pipe

(S)- Smooth Interior Culvert or Storm Sewer Pipe

(SS)- Semi-Smooth Interior Culvert Pipe

INDIANA DEPARTMENT OF TRANSPORTATION

INDEX AND
PIPE CLASSIFICATION TABLE

SEPTEMBER 2026

STANDARD DRAWING NO. E 715-PIPE-01

ELIZABETH P. MOUSER
REGISTERED
No. 10200124
STATE OF INDIANA
PROFESSIONAL ENGINEER

2/26/2026
DESIGN STANDARDS ENGINEER DATE

04/08/2026
CHIEF ENGINEER DATE

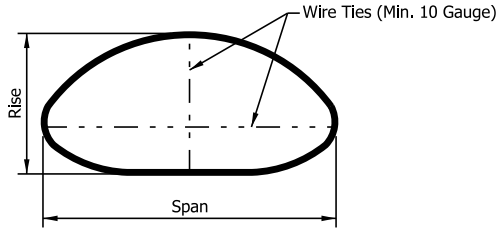

STEEL PIPE-ARCH SECTIONS
END STABILIZATION OF 3" x 1" CORRUGATED (1)

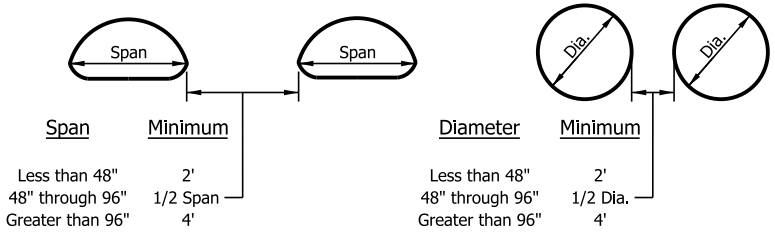

MULTIPLE INSTALLATION

NOTES:

(1) In order to maintain their manufactured shape, all 3" x 1" corrugated steel pipe-arch sections shall have wire ties attached at each end as shown in the detail. The wire ties shall be attached across the largest vertical and horizontal dimension of the pipe-arch. the wire ties shall be installed by the manufacturer and shall remain in place until the on-site installation is complete.

(2) WWR shall be wired to every second circumferential bolt and every twelfth longitudinal bolt.

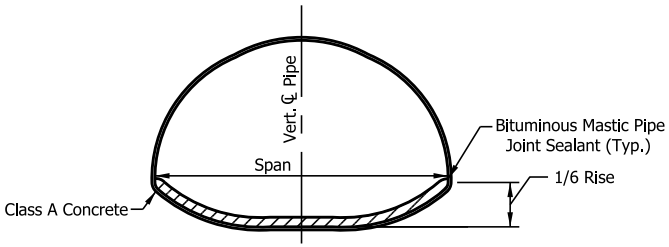

STRUCTURAL PLATE
PIPE-ARCH CULVERT
ELEVATION

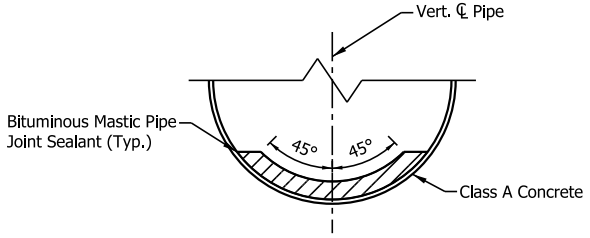

STRUCTURAL PLATE
PIPE CULVERT

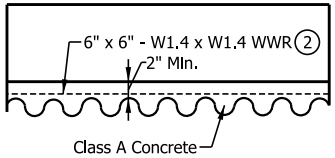

TYPICAL LONGITUDINAL SECTION

CONCRETE FIELD PAVED INVERT DETAILS

INDIANA DEPARTMENT OF TRANSPORTATION

MISCELLANEOUS PIPE
DETAILS

SEPTEMBER 2017

STANDARD DRAWING NO. E 715-PIPE-02

ELIZABETH W. PHILLIPS
REGISTERED
No. 10200124
STATE OF INDIANA
PROFESSIONAL ENGINEER

/s/ Elizabeth W. Phillips 03/22/17
DESIGN STANDARDS ENGINEER DATE

/s/ John Leckie 04/10/17
CHIEF ENGINEER DATE

REQUIREMENTS FOR CORRUGATED STEEL PIPE THICKNESS AND PROTECTION AT NON-ABRASIVE SITES

pH	≤ 4.0	4.5	5.0	5.5	6.0	6.5	≥7.0	Steel Conduit Type
Thickness required for 50-year Design Service Life	X	X	X	0.168	0.168	0.138	0.109	Zinc-Coated Corrugated Steel Pipe Zinc-Coated Corrugated Steel Pipe-Arch
	X	X	0.138	0.109	0.109	0.079	0.064	Zinc-Coated Corrugated and Steel Pipe w/Paved Invert Zinc-Coated Corrugated Steel Pipe-Arch w/Paved Invert Fully Bituminous-Coated and Lined Corrugated Steel Pipe Fully Bituminous-Coated and Lined Corrugated Steel Pipe-Arch
	X	X	0.138	0.109	0.109	0.079	0.064	Aluminum-Coated Type 2 Corrugated Steel Pipe Aluminum-Coated Type 2 Corrugated Steel Pipe-Arch
	0.109	0.109	0.079	0.064	0.064	0.064	0.064	Polymer Precoated Galvanized Corrugated Steel Pipe Polymer Precoated Galvanized Corrugated Steel Pipe-Arch
	0.111*	0.111*	0.111*	0.170	0.111	0.111	0.111	Structural Plate Steel Pipe Structural Plate Steel Pipe-Arch
	X	X	X	X	X	X	0.109	Zinc-Coated Spiral Ribbed Steel Pipe
	X	X	X	0.109	0.109	0.079	0.064	Zinc-Coated Sprial Ribbed Steel Pipe w/ Paved Invert
	X	X	X	0.109	0.109	0.079	0.064	Aluminum-Coated Type 2 Spiral Ribbed Steel Pipe
	0.109	0.109	0.079	0.064	0.064	0.064	0.064	Polymer Precoated Galvanized Spiral Ribbed Steel Pipe

* Concrete field paving required.

pH	≤ 4.0	4.5	5.0	5.5	6.0	6.5	≥7.0	Steel Conduit Type
Thickness required for 75-year Design Service Life	X	X	X	X	X	0.168	0.138	Zinc-Coated Corrugated and Spiral Ribbed Steel Pipe Zinc-Coated Corrugated Steel Pipe-Arch
	X	X	X	0.168	0.168	0.138	0.109	Zinc-Coated Corrugated Steel Pipe w/Paved Invert ZInc-Coated Corrugated Steel PIpe-Arch w/Paved Invert Fully BitumInous-Coated and LIned Corrugated Steel PIpe Fully Bituminous-Coated and Lined Corrugated Steel Pipe-Arch
	X	X	X	X	X	0.138	0.109	Aluminum-Coated Type 2 Corrugated Steel Pipe Aluminum-Coated Type 2 Corrugated Steel Pipe-Arch
	X	X	X	0.138	0.138	0.109	0.109	Polymer Precoated Galvanized Corrugated Steel Pipe Polymer Precoated Galvanized Corrugated Steel Pipe-Arch
	0.111*	0.111*	0.111*	0.218	0.111	0.111	0.111	Structural Plate Steel Pipe Structural Plate Steel Pipe-Arch
	X	X	X	X	X	X	0.109	Zinc-Coated Sprial Ribbed Steel Pipe w/ Paved Invert
	X	X	X	X	X	X	0.109	Aluminum-Coated Type 2 Spiral Ribbed Steel Pipe
	X	X	X	X	X	0.109	0.109	Polymer Precoated Galvanized Spiral Ribbed Steel Pipe

* Concrete field paving required.

NOTE:

1. See Standard Drawing E 715-PSLC-03 for General Notes.

INDIANA DEPARTMENT OF TRANSPORTATION

PIPE SERVICE LIFE CRITERIA
NON-ABRASIVE SITES

SEPTEMBER 2017

STANDARD DRAWING NO. E 715-PSLC-01

ELIZABETH W. PHILLIPS
REGISTERED
No. 10200124
STATE OF INDIANA
PROFESSIONAL ENGINEER

/s/ Elizabeth W. Phillips 03/31/17
DESIGN STANDARDS ENGINEER DATE

/s/ John Leckie 04/10/17
CHIEF ENGINEER DATE

REQUIREMENTS FOR CORRUGATED STEEL PIPE THICKNESS AND PROTECTION AT ABRASIVE SITES

pH	≤ 4.0	4.5	5.0	5.5	6.0	6.5	≥7.0	Steel Conduit Type
Thickness required for 50-year Design Service Life				0.168	0.168	0.138	0.109	Zinc-Coated Corrugated Steel Pipe w/Paved Invert Zinc-Coated Corrugated Steel Pipe-Arch w/Paved Invert Fully Bituminous-Coated and Lined Corrugated Steel Pipe Fully Bituminous-Coated and Lined Corrugated Steel Pipe-Arch
			0.138	0.109	0.109	0.079	0.064	Aluminum-Coated Type 2 Corrugated Steel w/Paved Invert Aluminum-Coated Type 2 Corrugated Steel Pipe-Arch w/Paved Invert
	0.109	0.109	0.079	0.064	0.064	0.064	0.064	Polymer Precoated Galvanized Corrugated Steel Pipe Polymer Precoated Galvanized Corrugated Steel Pipe-Arch
				0.170	0.111	0.111	0.111	Structural Plate Steel Pipe w/Concrete Field Paving Structural Plate Steel Pipe-Arch w/Concrete Field Paving
							0.109	Zinc-Coated Sprial Ribbed Steel Pipe w/ Paved Invert
				0.109	0.109	0.079	0.064	Aluminum-Coated Type 2 Spiral Ribbed Pipe w/ Paved Invert
	0.109	0.109	0.079	0.064	0.064	0.064	0.064	Polymer Precoated Galvanized Spiral Ribbed Steel Pipe

pH	≤ 4.0	4.5	5.0	5.5	6.0	6.5	≥7.0	Steel Conduit Type
Thickness required for 75-year Design Service Life						0.168	0.138	Zinc-Coated Corrugated Steel Pipe w/Paved Invert Zinc-Coated Corrugated Steel Pipe-Arch w/Paved Invert Fully Bituminous-Coated and Lined Corrugated Steel Pipe Fully Bituminous-Coated and Lined Corrugated Steel Pipe-Arch
						0.138	0.109	Aluminum-Coated Type 2 Corrugated Steel Pipe w/Paved Invert Aluminum-Coated Type 2 Corrugated Steel Pipe-Arch w/Paved Invert
				0.138	0.138	0.109	0.109	Polymer Precoated Galvanized Corrugated and Steel Pipe Polymer Precoated Galvanized Corrugated Steel Pipe-Arch
				0.218	0.111	0.111	0.111	Structural Plate Steel Pipe w/Concrete Field Paving Structural Plate Steel Pipe-Arch w/Concrete Field Paving
							0.109	Aluminum-Coated Type 2 Spiral Ribbed Pipe w/ Paved Invert
						0.109	0.109	Polymer Precoated Galvanized Spiral Ribbed Steel Pipe

NOTE:

1. See Standard Drawing E 715-PSLC-03 for General Notes.

INDIANA DEPARTMENT OF TRANSPORTATION

PIPE SERVICE LIFE CRITERIA
ABRASIVE SITES

SEPTEMBER 2017

STANDARD DRAWING NO. E 715-PSLC-02

ELIZABETH W. PHILLIPS REGISTERED No. 10200124 STATE OF INDIANA PROFESSIONAL ENGINEER

/s/ Elizabeth W. Phillips 03/31/17
DESIGN STANDARDS ENGINEER DATE

/s/ John Leckie 04/10/17
CHIEF ENGINEER DATE

GENERAL NOTES:

1. "X" entries in the table indicate that a thickness which satisfies the required design service life is not available.
2. The tabulated plate thickness for structural plate steel pipe and pipe-arches reflects the required thickness for the top and side plates. If the tabulated plate thickness is less than 0.280 in. the bottom plates shall be of the next greater available thickness.
3. Corrugated aluminum alloy pipe and pipe-arches and aluminum alloy structural plate pipe and pipe-arches are acceptable with the minimum thickness required to satisfy cover conditions for all non-abrasive sites with a structure pH ≥ 5.0.
4. Corrugated aluminum alloy pipe and pipe-arches with bituminous paved invert and aluminum alloy structural plate pipe and pipe-arches with concrete field paving are acceptable with the minimum thickness required to satisfy cover conditions for all abrasive sites with a structure pH ≥ 5.0.
5. Service life criteria apply only to reinforced concrete, corrugated metal, and structural plate metal pipe. Other materials which conform to the designated pipe type and height of cover parameters are acceptable for installation.
6. Service life criteria do not apply to Type 4 pipe.

REQUIREMENTS FOR REINFORCED CONCRETE PIPE PROTECTION

Pipe Slope	Minimum pH to Attain Design Service Life	
	50 Year	75 Year
Less than 3%	4.0	4.5
3% to 10%	4.5	5.0
Greater than 10%	5.0	5.5

For a structure pH lower than the minimums listed above, reinforced concrete pipe shall not be used.

INDIANA DEPARTMENT OF TRANSPORTATION

PIPE SERVICE
LIFE CRITERIA

SEPTEMBER 2017

STANDARD DRAWING NO. E 715-PSLC-03

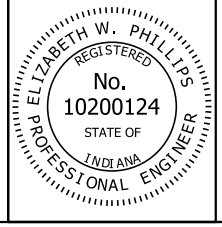

/s/ Elizabeth W. Phillips 03/31/17
DESIGN STANDARDS ENGINEER DATE

/s/ John Leckie 04/10/17
CHIEF ENGINEER DATE

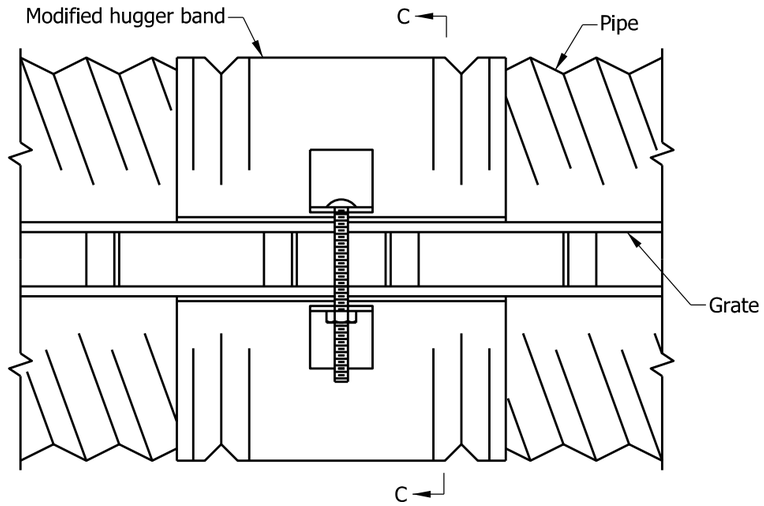

MODIFIED HUGGER BAND
TOP VIEW

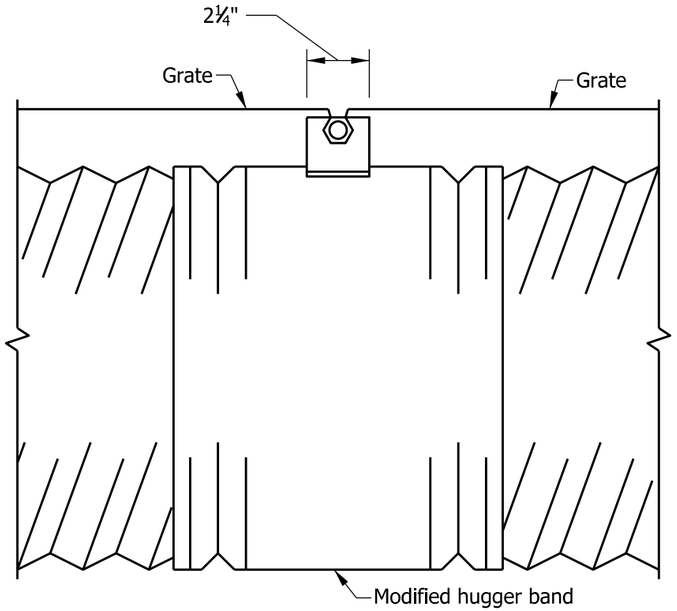

MODIFIED HUGGER BAND
SIDE VIEW

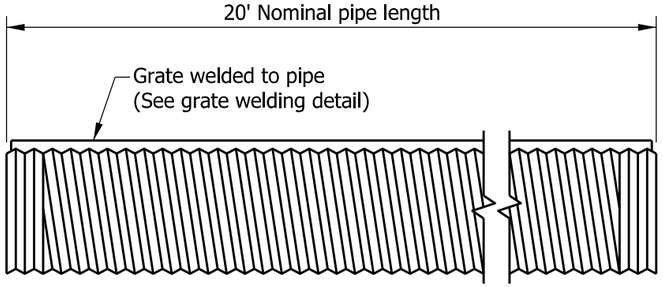

TYPICAL PIPE SECTION

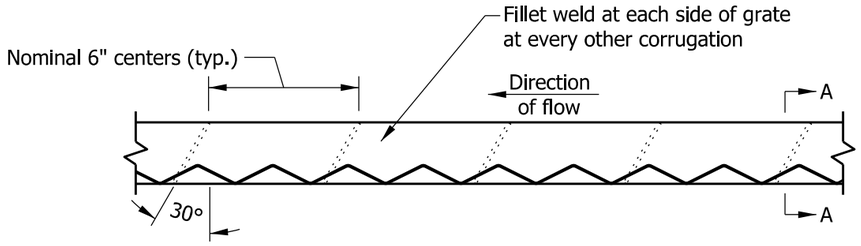

GRATE WELDING DETAIL

INDIANA DEPARTMENT OF TRANSPORTATION

SLOTTED DRAIN PIPE

APRIL 1995

STANDARD DRAWING NO. E 715-SLDR-01

ANTHONY L. UREMOVICH REGISTERED No. 18095 STATE OF INDIANA PROFESSIONAL ENGINEER

/s/ Anthorny L. Uremovich 11-15-99
DESIGN STANDARDS ENGINEER DATE

/s/ Firooz Zandi 11-15-99
CHIEF HIGHWAY ENGINEER DATE

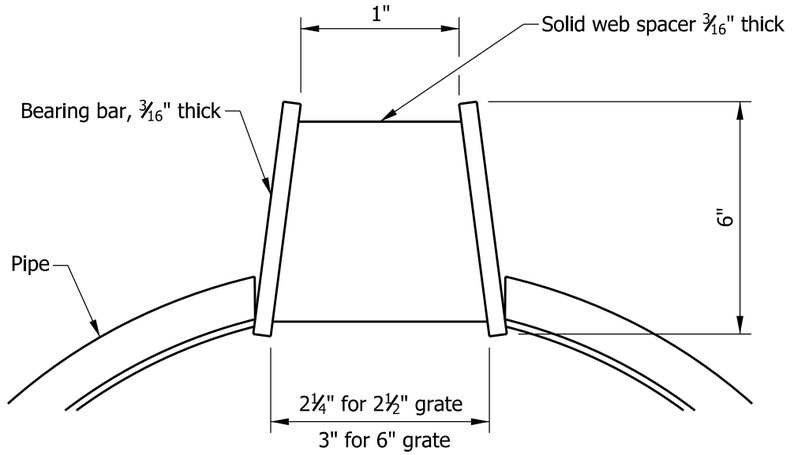

SECTION A-A
STANDARD GRATE DETAIL

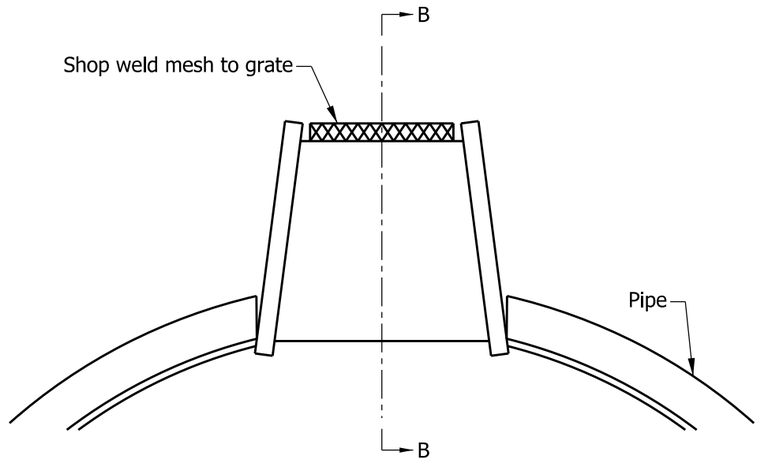

SECTION A-A
GRATE DETAIL WITH MESH

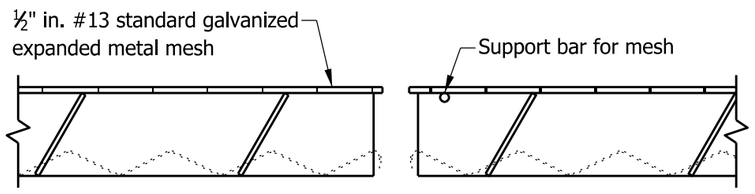

SECTION B-B

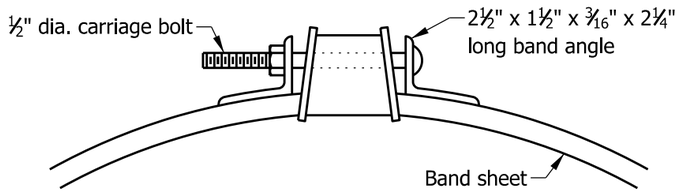

SECTION C-C

STANDARD SIZES						
PIPE THICKNESS (IN.)	DIAMETER OF PIPE (IN.)					
	12	15	18	24	30	36
0.064	X	X	X	X	X	X
0.079	X	X	X	X	X	X
0.109	N.A.	N.A.	N.A.	N.A.	X	X

X - Size available for designated thickness
N.A. - Size not available for designated thickness

INDIANA DEPARTMENT OF TRANSPORTATION

SLOTTED DRAIN PIPE

JANUARY 1998

STANDARD DRAWING NO. E 715-SLDR-02

ANTHONY L. UREMOVICH REGISTERED No. 18095 STATE OF INDIANA PROFESSIONAL ENGINEER

/s/ Anthorny L. Uremovich 11-15-99
DESIGN STANDARDS ENGINEER DATE

/s/ Firooz Zandi 11-15-99
CHIEF HIGHWAY ENGINEER DATE

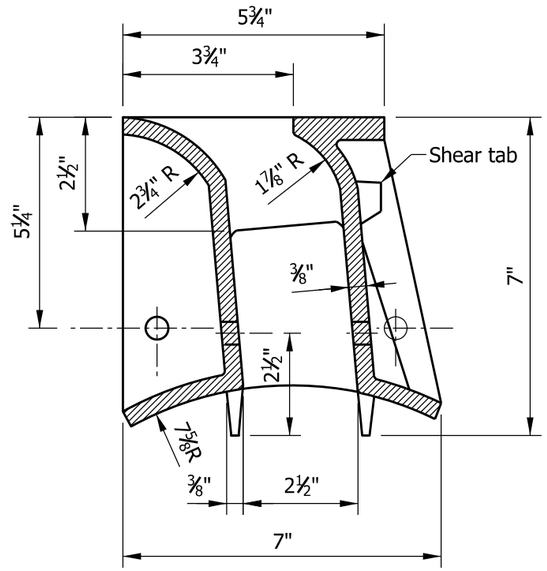

SECTION THROUGH VANE DRAIN

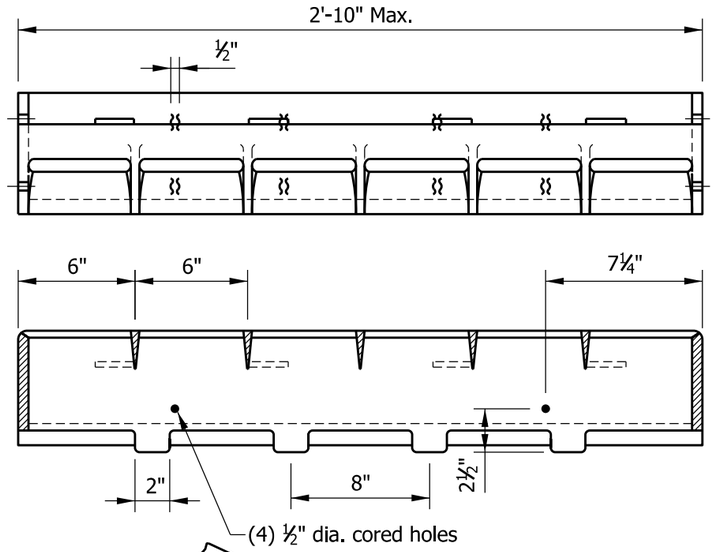

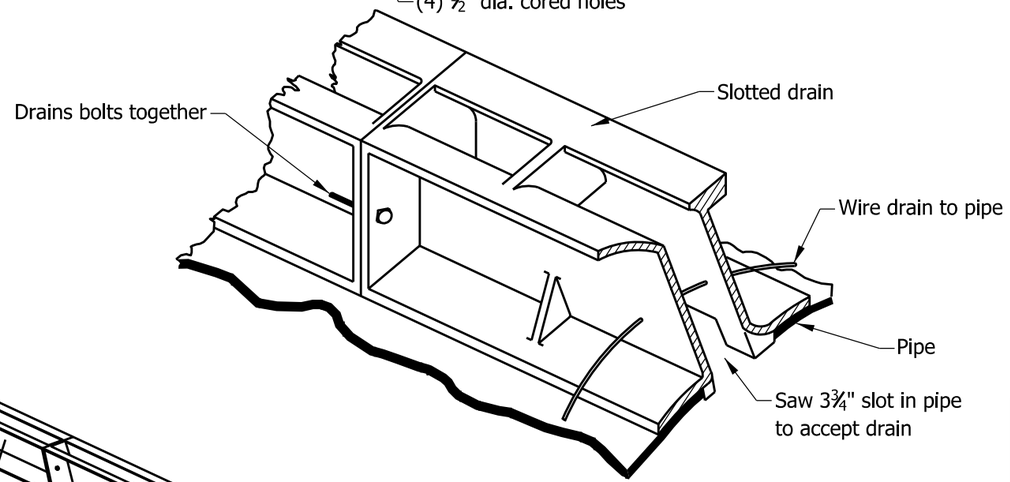

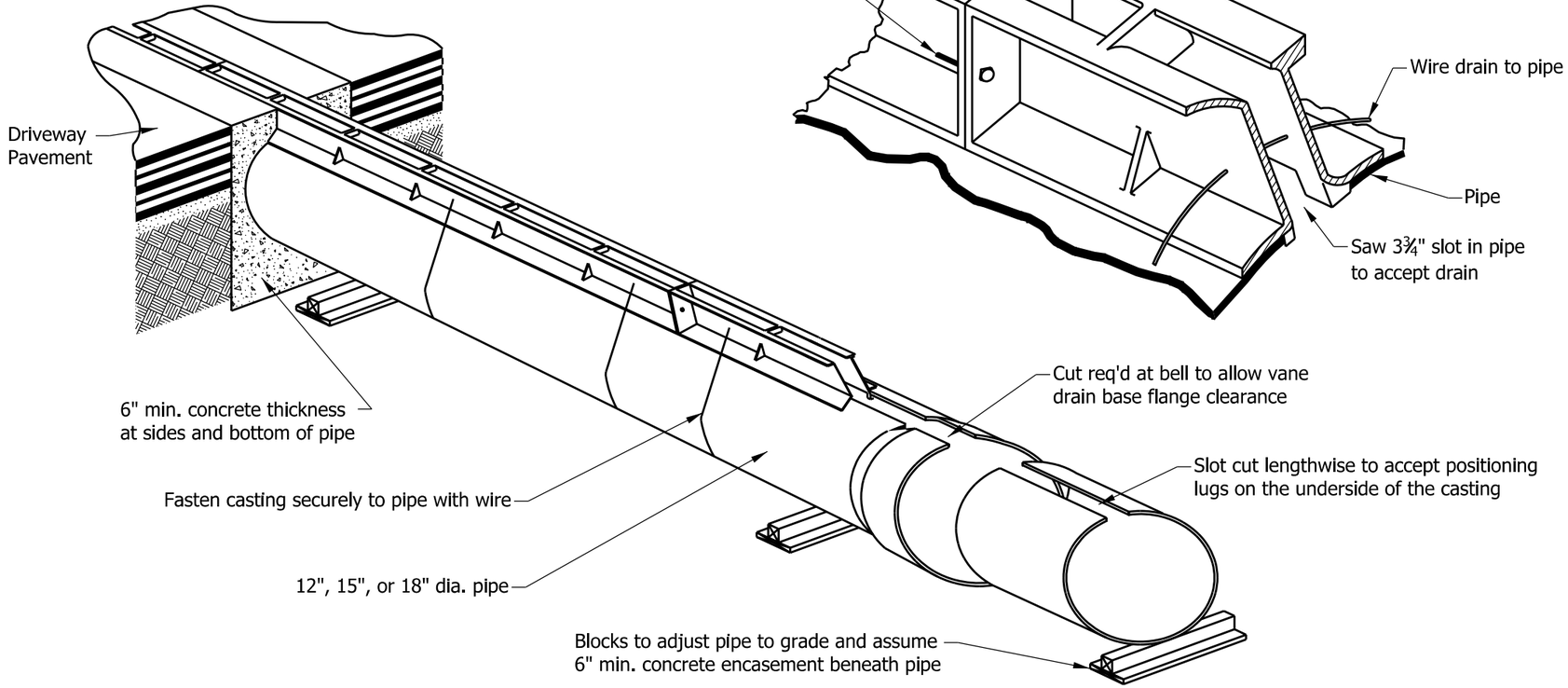

INDIANA DEPARTMENT OF TRANSPORTATION

SLOTTED VANE DRAIN PIPE

APRIL 1995

STANDARD DRAWING NO. E 715-SLDR-03

ANTHONY L. UREMOVICH REGISTERED No. 18095 STATE OF INDIANA PROFESSIONAL ENGINEER

/s/ Anthony L. Uremovich 11-15-99
DESIGN STANDARDS ENGINEER DATE

/s/ Firooz Zandi 11-15-99
CHIEF HIGHWAY ENGINEER DATE

GENERAL NOTES

1. Longitudinal safety bar shall be welded to transverse bars. For cross structure and section, if S ⟨ 2'–6, no longitudinal safety bar is required. If S ⟩ 2'–6, longitudinal safety bar(s) shall be provided so S_1 ⟨ 2'–6.

2. Bolts shall be oriented with threads to inside of end section.

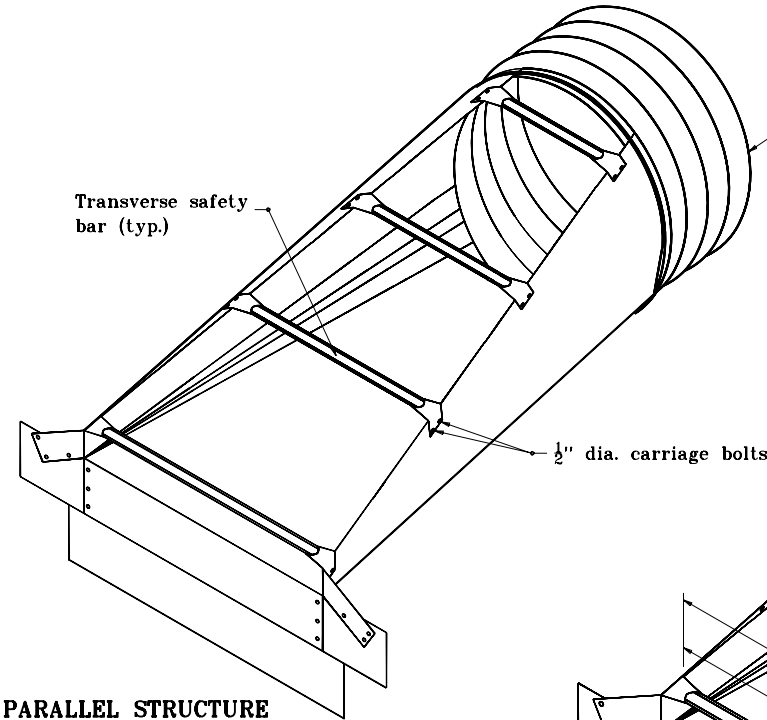

PARALLEL STRUCTURE END SECTION

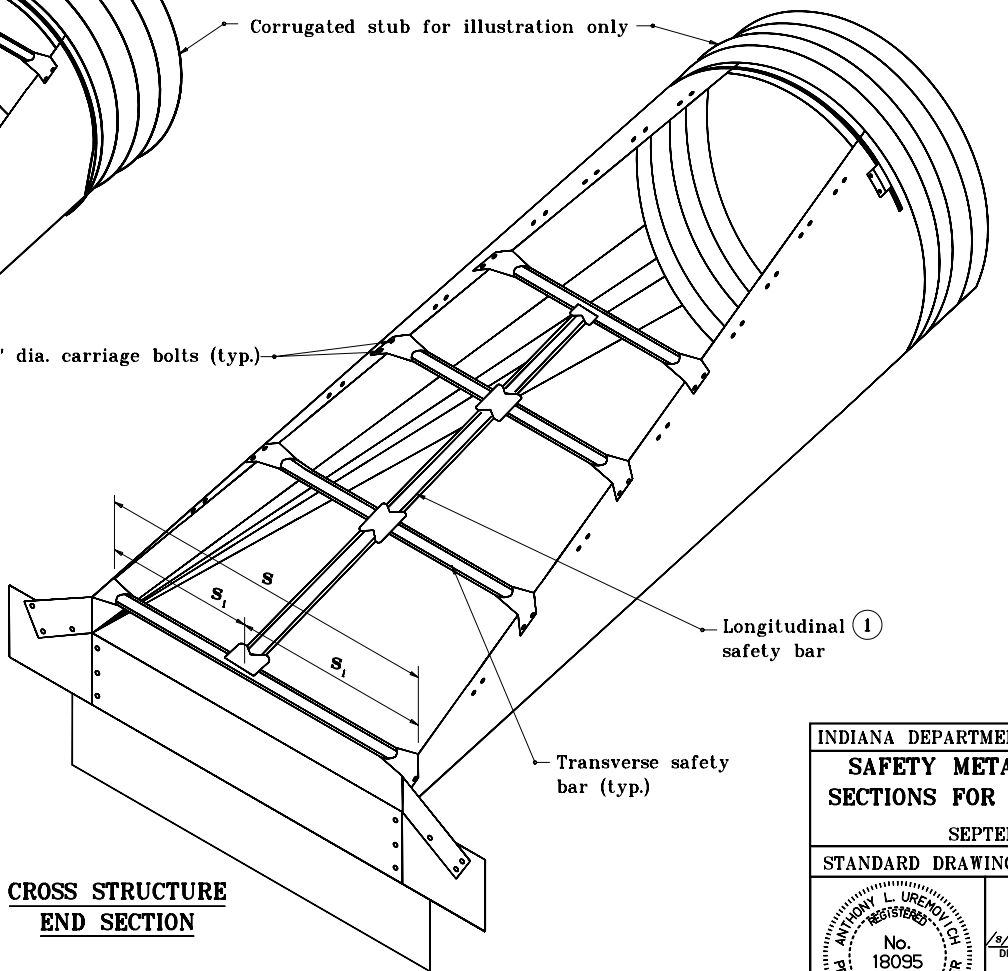

CROSS STRUCTURE END SECTION

LEGEND

s – Overall span

s_1 – Span between end section edge and longitudinal safety bar or between longitudinal safety bars.

$$s_1 = \frac{s}{n + 1}$$

where n = Number of longitudinal safety bars

INDIANA DEPARTMENT OF TRANSPORTATION

SAFETY METAL CULVERT END SECTIONS FOR CORRUGATED PIPE

SEPTEMBER 2000

STANDARD DRAWING NO. **E 715–SMES–01**

ANTHONY L. UREMOVICH REGISTERED No. 18095 STATE OF INDIANA PROFESSIONAL ENGINEER

DESIGN STANDARDS ENGINEER

/s/ Anthony L. Uremovich 9–01–00
DESIGN STANDARDS ENGINEER — DATE

/s/ Firooz Zandi 9–01–00
CHIEF HIGHWAY ENGINEER — DATE

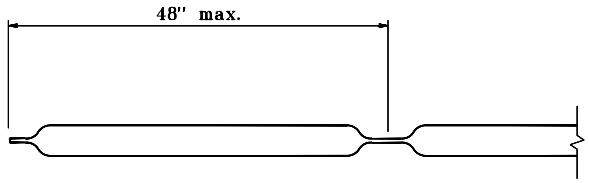

LONGITUDINAL SAFETY BAR DETAIL

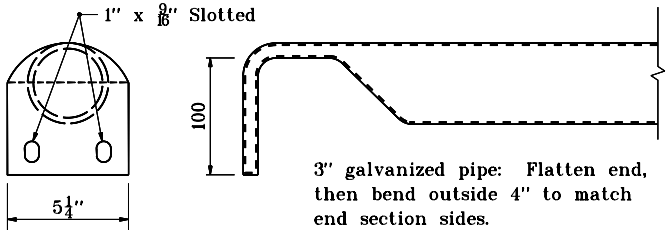

OR

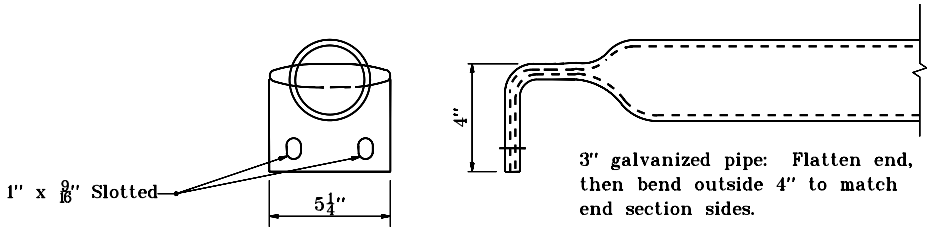

TRANSVERSE SAFETY BAR DETAILS

INDIANA DEPARTMENT OF TRANSPORTATION

SAFETY METAL CULVERT END SECTIONS FOR CORRUGATED PIPE

JANUARY 1998

STANDARD DRAWING NO. E 715-SMES-02

ANTHONY L. UREMOVICH REGISTERED No. 18095 STATE OF INDIANA PROFESSIONAL ENGINEER

DESIGN STANDARDS ENGINEER

DETAILS PLACED IN THIS FORMAT 7-27-99

/s/ Anthony L. Uremovich 7-27-99
DESIGN STANDARDS ENGINEER DATE

/s/ Firooz Zandi 7-27-99
CHIEF HIGHWAY ENGINEER DATE

ORIGINALLY APPROVED 1-02-98

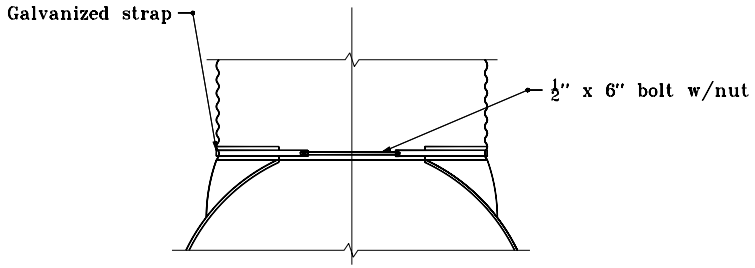

TYPE 1 CONNECTOR DETAIL
Through 24" dia.

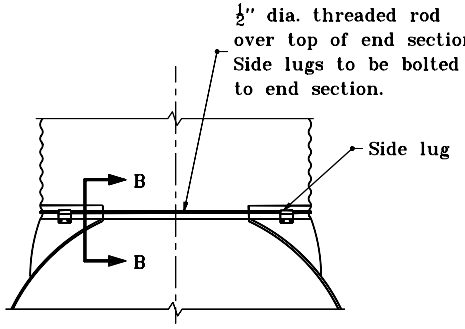

TYPE 2 CONNECTOR DETAIL
For all circular pipes larger than 24"
and all pipe-arches

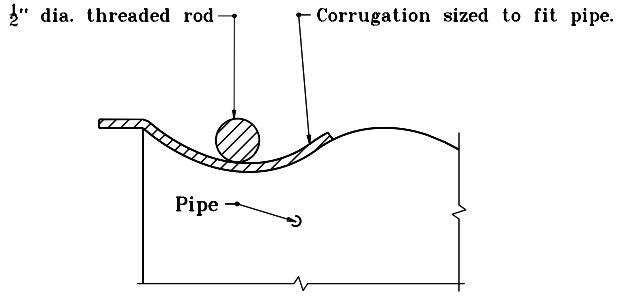

SECTION B-B

GENERAL NOTES

1. For circular pipe diameters through 24", attach end section to pipe with type 1 connector. For all other sizes, attach end section to pipe with type 2 connector.

INDIANA DEPARTMENT OF TRANSPORTATION

SAFETY METAL CULVERT END SECTIONS FOR CORRUGATED PIPE

JANUARY 1998

STANDARD DRAWING NO. **E 715-SMES-03**

ANTHONY L. UREMOVICH REGISTERED No. 18095 STATE OF INDIANA PROFESSIONAL ENGINEER
DESIGN STANDARDS ENGINEER

DETAILS PLACED IN THIS FORMAT	7-27-99
/s/ Anthony L. Uremovich, DESIGN STANDARDS ENGINEER	7-27-99
/s/ Firooz Zandi, CHIEF HIGHWAY ENGINEER	7-27-99
ORIGINALLY APPROVED	1-02-98

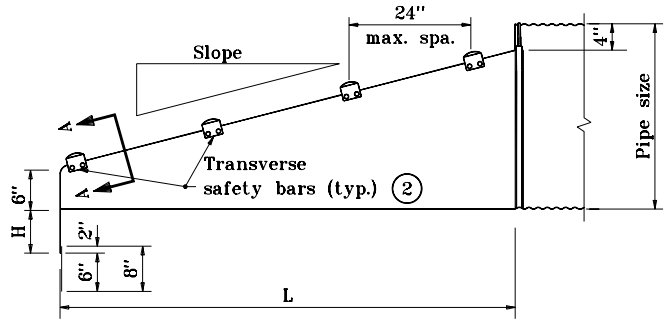

SIDE ELEVATION OF PARALLEL STRUCTURE END SECTION

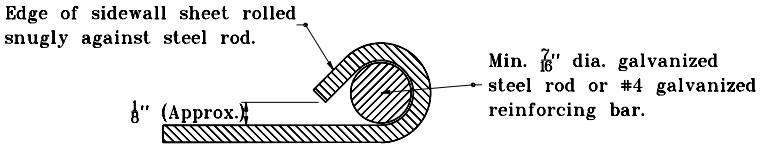

SECTION A–A

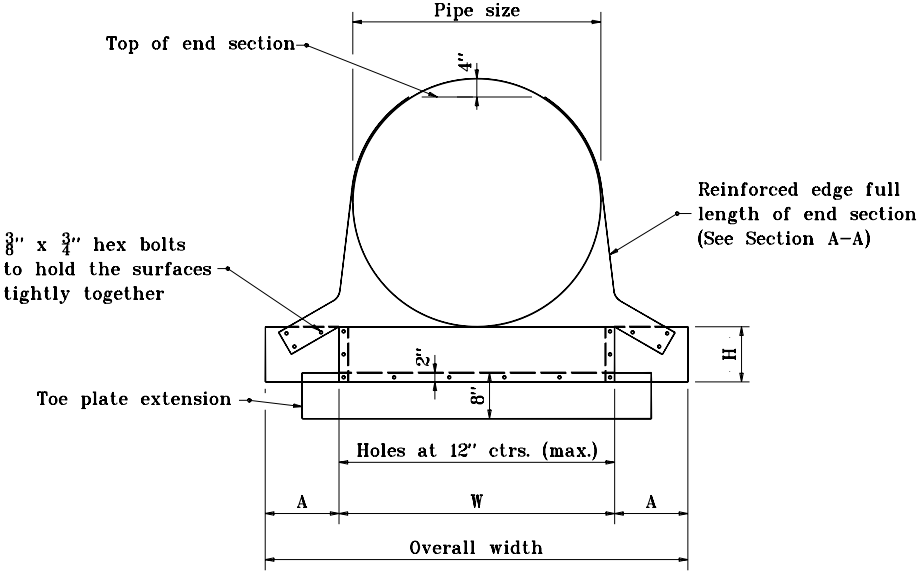

FRONT VIEW

GENERAL NOTES

1. See Standard Drawing E 715–SMES–06 for variable dimensions.

(2) Transverse safety bars shall be schedule 40 galvanized steel pipe. Pipe shall be galvanized after forming. Number of bars required will vary depending on the length of the end sections.

3. The toe plate extension shall be the same thickness as the end section. The dimension shall be the end section overall width less 6".

INDIANA DEPARTMENT OF TRANSPORTATION

SAFETY METAL CULVERT END SECTIONS FOR CORRUGATED PIPE

JANUARY 1998

STANDARD DRAWING NO. E 715–SMES–04

ANTHONY L. UREMOVICH REGISTERED No. 18095 STATE OF INDIANA PROFESSIONAL ENGINEER

DESIGN STANDARDS ENGINEER

DETAILS PLACED IN THIS FORMAT 7-27-99

/s/ Anthony L. Uremovich 7-27-99
DESIGN STANDARDS ENGINEER DATE

/s/ Firooz Zandi 7-27-99
CHIEF HIGHWAY ENGINEER DATE

ORIGINALLY APPROVED 1-02-98

GENERAL NOTES

(1) Toe plate extension shall be the same thickness as the end section. Dimension shall be overall width less 6".

(2) Transverse safety bars shall be Schedule 40 galvanized steel pipe. Pipe shall be galvanized after forming. Number of bars required will vary depending on the length of the end sections.

3. Slotted holes for safety bar attachment shall be provided for all end sections.

4. See Standard Drawing E 715-SMES-04 for Section A-A.

5. See Standard Drawing E 715-SMES-06 for variable dimensions.

(6) See Standard Drawing E 715-SMES-01 for warrant of longitudinal saftey bar.

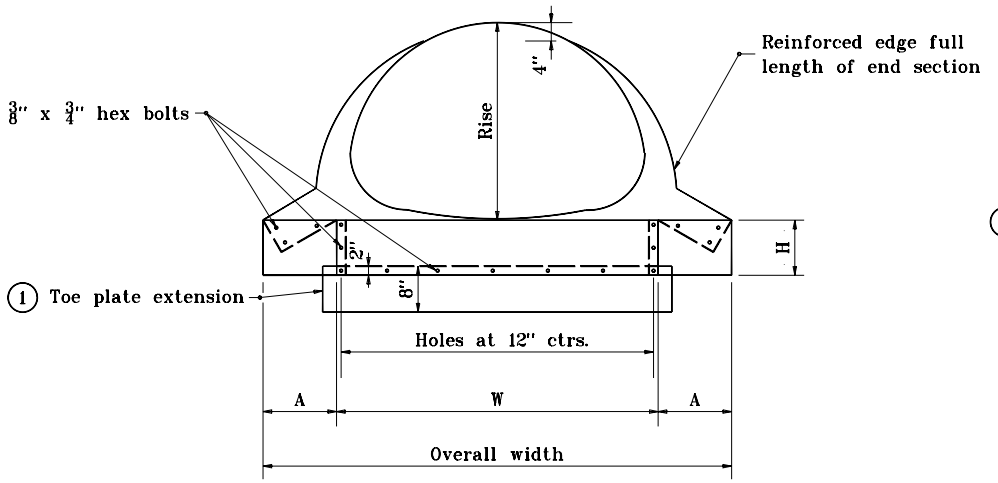

FRONT VIEW

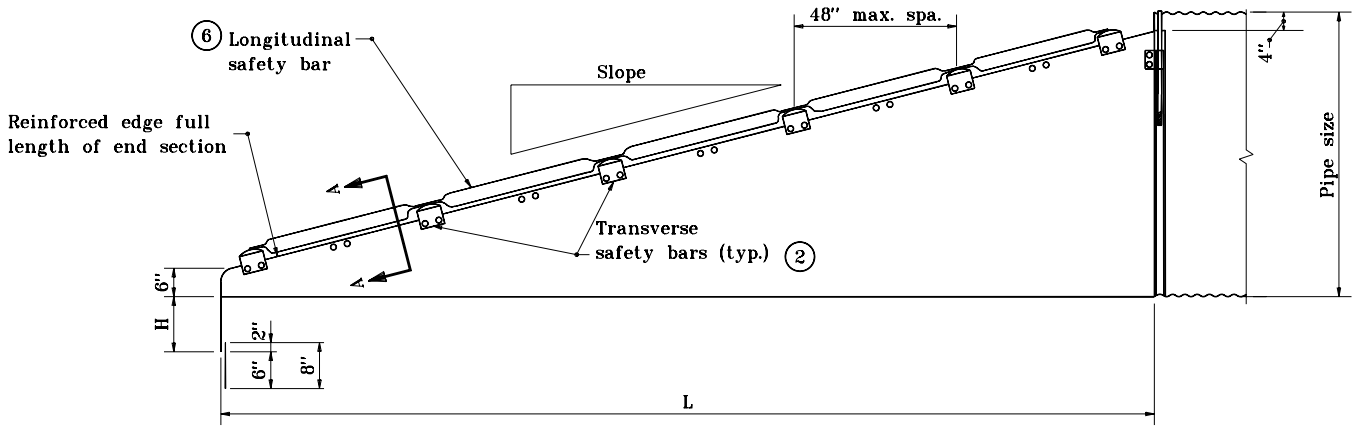

SIDE ELEVATION FOR CROSS STRUCTURE END SECTION

INDIANA DEPARTMENT OF TRANSPORTATION

SAFETY METAL CULVERT END SECTIONS FOR CORRUGATED PIPE

JANUARY 1998

STANDARD DRAWING NO. **E 715-SMES-05**

ANTHONY L. UREMOVICH REGISTERED No. 18095 STATE OF INDIANA PROFESSIONAL ENGINEER

DESIGN STANDARDS ENGINEER

DETAILS PLACED IN THIS FORMAT	7-27-99
/s/ Anthony L. Uremovich, DESIGN STANDARDS ENGINEER	7-27-99 DATE
/s/ Firooz Zandi, CHIEF HIGHWAY ENGINEER	7-27-99 DATE
ORIGINALLY APPROVED	1-02-98

METAL END SECTIONS FOR CIRCULAR PIPES									
Pipe Dia.	Min. Thick.	Dimensions, in.				L Dimensions			
		A	H	W	Overall Width	Slope	Length (in.)	Slope	Length (in.)
15	.064	8	6	21	37	4:1	20	6:1	30
18	.064	8	6	24	40	4:1	32	6:1	48
21	.064	8	6	27	43	4:1	44	6:1	66
24	.064	8	6	30	46	4:1	56	6:1	84
30	.109	12	9	36	60	4:1	80	6:1	120
36	.109	12	9	42	66	4:1	104	6:1	156
42	.109	16	12	48	80	4:1	128	6:1	192
48	.109	16	12	54	86	4:1	152	6:1	228
54	.109	16	12	60	92	4:1	176	6:1	264
60	.109	16	12	66	98	4:1	200	6:1	300

SAFETY METAL END SECTIONS FOR PIPE-ARCHES											
Equiv. Dia. (in.)	(inches)		Min. Thick.	Dimensions, in.				L Dimensions			
	Span	Rise	in.	A	H	W	Overall Width	Slope	Length (in.)	Slope	Length (in.)
18	21	15	.064	8	6	27	43	4:1	20	6:1	30
21	24	18	.064	8	6	30	46	4:1	32	6:1	48
24	28	20	.064	8	6	34	50	4:1	40	6:1	60
30	35	24	.079	12	9	41	65	4:1	56	6:1	84
36	42	29	.109	12	9	48	72	4:1	76	6:1	114
42	49	33	.109	16	12	55	87	4:1	92	6:1	138
48	57	38	.109	16	12	63	95	4:1	112	6:1	168
54	64	43	.109	16	12	70	102	4:1	132	6:1	198
60	71	47	.109	16	12	77	109	4:1	148	6:1	222
72	83	57	.109	16	12	89	121	4:1	188	6:1	282

INDIANA DEPARTMENT OF TRANSPORTATION

SAFETY METAL CULVERT END SECTIONS FOR CORRUGATED PIPE

JANUARY 1998

STANDARD DRAWING NO. E 715-SMES-06

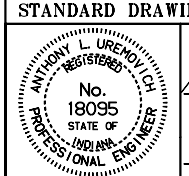

DESIGN STANDARDS ENGINEER

DETAILS PLACED IN THIS FORMAT 11-15-99

/s/ Anthony L. Uremovich 11-15-99
DESIGN STANDARDS ENGINEER DATE

/s/ Firooz Zandi 11-15-99
CHIEF HIGHWAY ENGINEER DATE

ORIGINALLY APPROVED 1-02-98

GENERAL NOTES

1. Longitudinal safety bar shall be welded to transverse bars. For cross structure and section, if S ⟨ 2'–6, no longitudinal safety bar is required. If S ⟩ 2'–6, longitudinal safety bar(s) shall be provided so S_1 ⟨ 2'–6.

2. Bolts shall be oriented with threads to inside of end section.

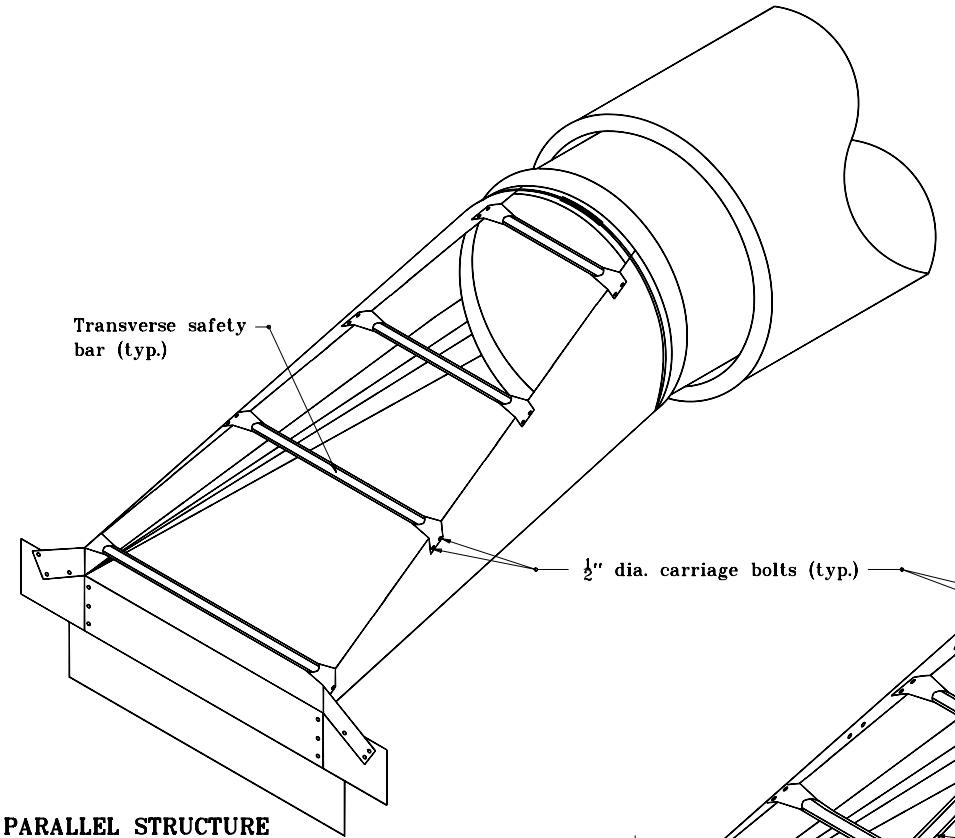

PARALLEL STRUCTURE END SECTION

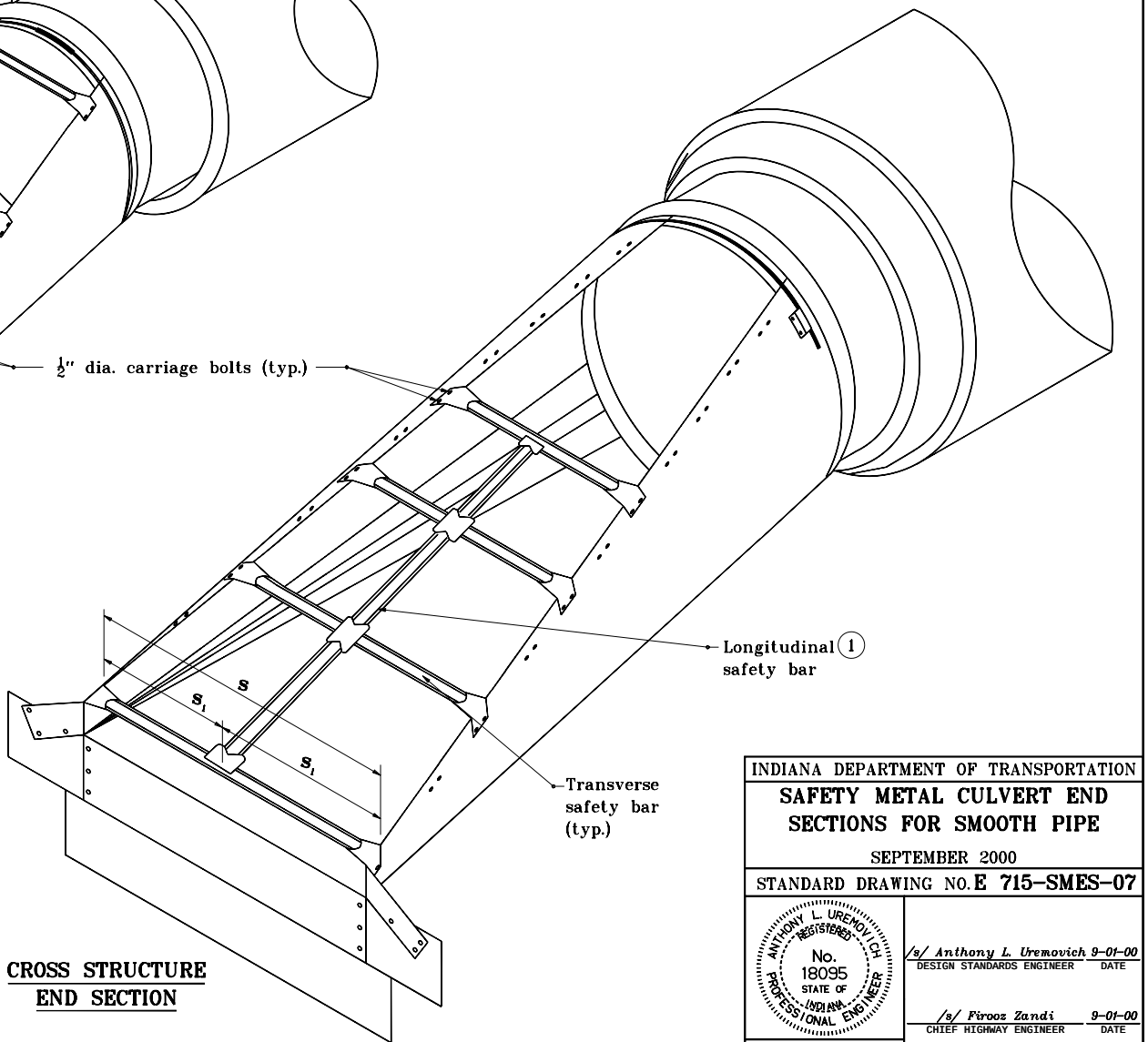

CROSS STRUCTURE END SECTION

LEGEND

s – Overall span

s_1 – Span between end section edge and longitudinal safety bar or between longitudinal safety bars.

$$s_1 = \frac{s}{n+1}$$

where n = Number of longitudinal safety bars

INDIANA DEPARTMENT OF TRANSPORTATION

SAFETY METAL CULVERT END SECTIONS FOR SMOOTH PIPE

SEPTEMBER 2000

STANDARD DRAWING NO. **E 715–SMES–07**

ANTHONY L. UREMOVICH REGISTERED No. 18095 STATE OF INDIANA PROFESSIONAL ENGINEER

DESIGN STANDARDS ENGINEER

/s/ Anthony L. Uremovich 9–01–00
DESIGN STANDARDS ENGINEER — DATE

/s/ Firooz Zandi 9–01–00
CHIEF HIGHWAY ENGINEER — DATE

GENERAL NOTES

1. For circular pipe diameters through 24", attach end section to pipe with type 1 connector. For all other sizes, attach end section to pipe with type 2 connector.

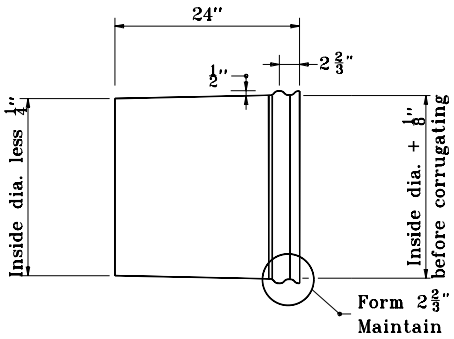

SMOOTH TAPERED SLEEVE DETAIL

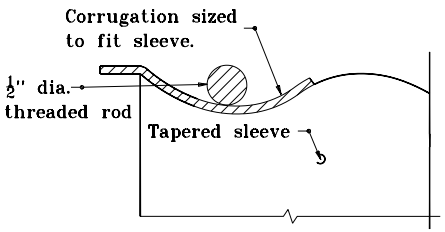

SECTION B–B

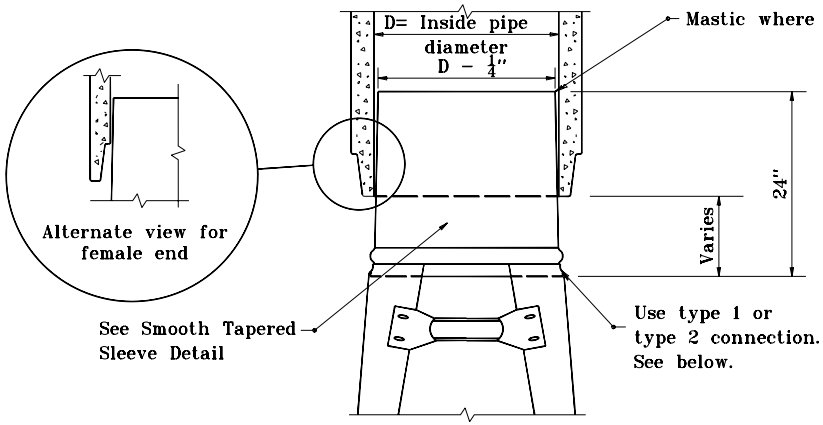

TAPERED SLEEVE FOR ATTACHING STEEL END SECTION TO SMOOTH INTERIOR PIPE

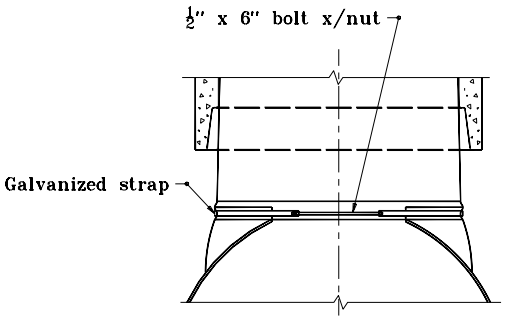

TYPE 1 CONNECTOR DETAIL
for all circular pipes through 24"

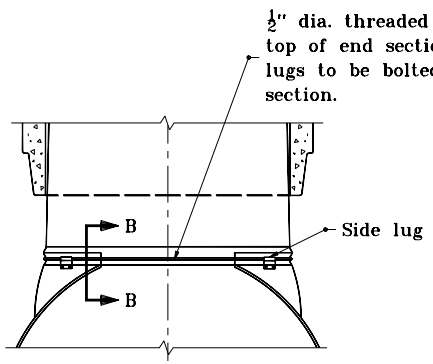

TYPE 2 CONNECTOR DETAIL
all circular pipes larger than 24" and all horizontal elliptical pipes

INDIANA DEPARTMENT OF TRANSPORTATION

SAFETY METAL CULVERT END SECTIONS FOR SMOOTH PIPE

JANUARY 1998

STANDARD DRAWING NO. **E 715-SMES-08**

ANTHONY L. UREMOVICH REGISTERED No. 18095 STATE OF INDIANA PROFESSIONAL ENGINEER

DESIGN STANDARDS ENGINEER

DETAILS PLACED IN THIS FORMAT 7-27-99

/s/ Anthony L. Uremovich 7-27-99
DESIGN STANDARDS ENGINEER DATE

/s/ Firooz Zandi 7-27-99
CHIEF HIGHWAY ENGINEER DATE

ORIGINALLY APPROVED 1-02-98

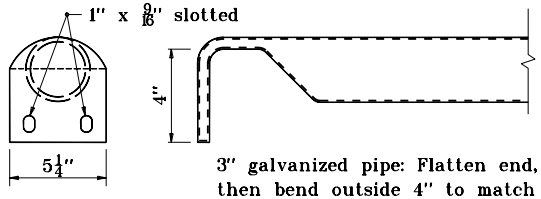

3" galvanized pipe: Flatten end, then bend outside 4" to match end section sides.

OR

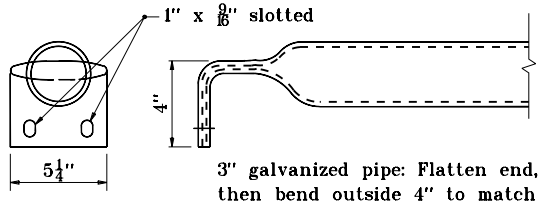

3" galvanized pipe: Flatten end, then bend outside 4" to match end section sides.

TRANSVERSE SAFETY BAR DETAILS

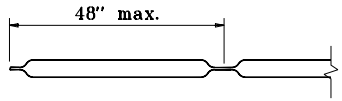

LONGITUDINAL SAFETY BAR DETAIL

INDIANA DEPARTMENT OF TRANSPORTATION

SAFETY METAL CULVERT END SECTIONS FOR SMOOTH PIPE

JANUARY 1998

STANDARD DRAWING NO. E 715-SMES-09

ANTHONY L. UREMOVICH REGISTERED No. 18095 STATE OF INDIANA PROFESSIONAL ENGINEER

DESIGN STANDARDS ENGINEER

DETAILS PLACED IN THIS FORMAT 7-27-99

/s/ Anthony L. Uremovich 7-27-99
DESIGN STANDARDS ENGINEER DATE

/s/ Firooz Zandi 7-27-99
CHIEF HIGHWAY ENGINEER DATE

ORIGINALLY APPROVED 1-02-98

GENERAL NOTES

(1) Toe plate extension is to be the same thickness as the end section. Dimension shall be end section overall width less 6".

(2) Transverse safety bars shall be Schedule 40 galvanized steel pipe. Pipe to be galvanized after forming. Number of bars req'd will vary depending on the length of the end section.

(3) See Standard Drawing E 715-SMES-11 for Section A-A.

4. See Standard Drawing E 715-SMES-12 for variable dimensions.

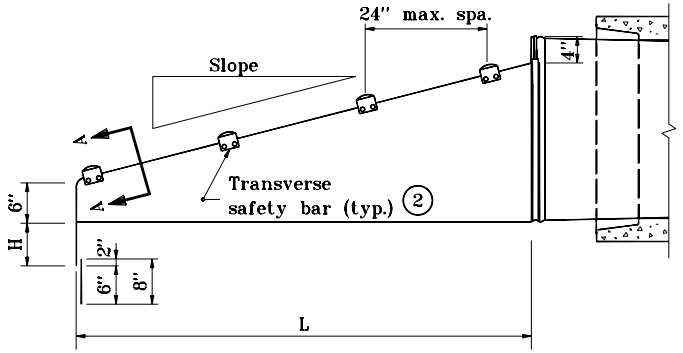

SIDE ELEVATION OF PARALLEL STRUCTURE END SECTION

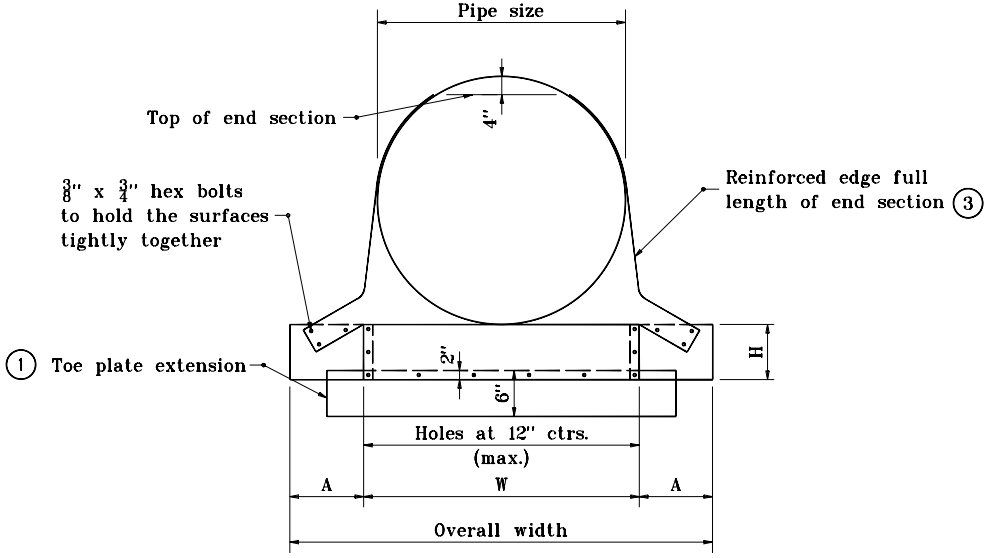

FRONT VIEW

INDIANA DEPARTMENT OF TRANSPORTATION

SAFETY METAL CULVERT END SECTIONS FOR SMOOTH PIPE

JANUARY 1998

STANDARD DRAWING NO. **E 715-SMES-10**

ANTHONY L. UREMOVICH REGISTERED No. 18095 STATE OF INDIANA PROFESSIONAL ENGINEER

DESIGN STANDARDS ENGINEER

DETAILS PLACED IN THIS FORMAT 7-27-99

/s/ Anthony L. Uremovich 7-27-99
DESIGN STANDARDS ENGINEER DATE

/s/ Firooz Zandi 7-27-99
CHIEF HIGHWAY ENGINEER DATE

ORIGINALLY APPROVED 1-02-98

GENERAL NOTES

(1) Toe plate extension is to be the same thickness as the end section. Dimensions shall be overall width less 6", by 8" high.

(2) Transverse safety bars shall be Schedule 40 galvanized steel pipe. Pipe to be galvanized after forming. Number of bars req'd. will vary depending on the length of the end section.

3. Slotted holes for safety bar attachment shall be provided for all end sections.

4. See Standard Drawing E 715-SMES-12 for variable dimensions.

(5) See Standard Drawing E 715-SMES-07 for warrant of longitudinal safety bar.

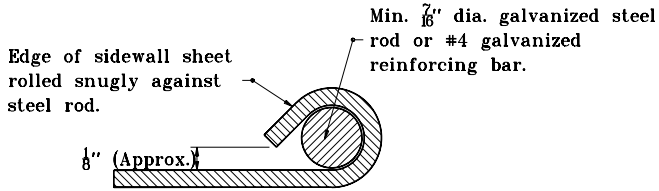

SECTION A-A

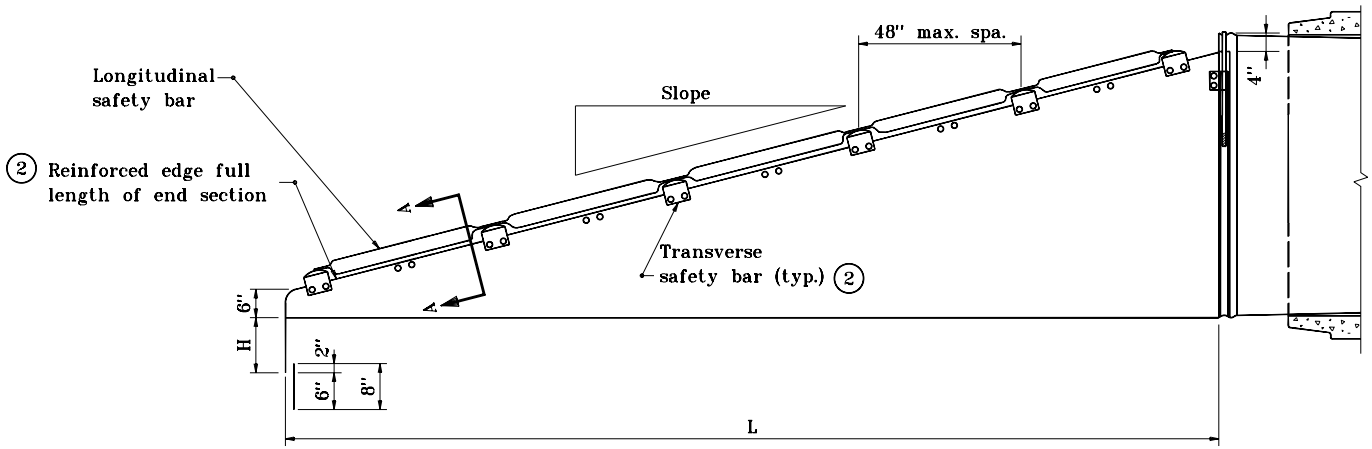

SIDE ELEVATION FOR CROSS STRUCTURE END SECTION

INDIANA DEPARTMENT OF TRANSPORTATION

SAFETY METAL CULVERT END SECTIONS FOR SMOOTH PIPE

JANUARY 1998

STANDARD DRAWING NO. **E 715-SMES-11**

ANTHONY L. UREMOVICH REGISTERED No. 18095 STATE OF INDIANA PROFESSIONAL ENGINEER

DESIGN STANDARDS ENGINEER

DETAILS PLACED IN THIS FORMAT 7-27-99

/s/ Anthony L. Uremovich 7-27-99
DESIGN STANDARDS ENGINEER DATE

/s/ Firooz Zandi 7-27-99
CHIEF HIGHWAY ENGINEER DATE

ORIGINALLY APPROVED 1-02-98

SAFETY METAL END SECTIONS FOR CIRCULAR PIPES									
Pipe Dia. (in.)	Min. Thick.	Dimensions, in.				L Dimensions			
		A	H	W	Overall Width	Slope	Length (in.)	Slope	Length (in.)
15	.064	8	6	21	37	4:1	20	6:1	30
18	.064	8	6	24	40	4:1	32	6:1	48
21	.064	8	6	27	43	4:1	44	6:1	66
24	.064	8	6	30	46	4:1	56	6:1	84
27	.109	12	9	33	57	4:1	68	6:1	102
30	.109	12	9	36	60	4:1	80	6:1	120
33	.109	12	9	39	63	4:1	92	6:1	138
36	.109	12	9	42	66	4:1	104	6:1	156
42	.109	16	12	48	80	4:1	128	6:1	192
48	.109	16	12	54	86	4:1	152	6:1	228
54	.109	16	12	60	92	4:1	176	6:1	264
60	.109	16	12	66	98	4:1	200	6:1	300

SAFETY METAL END SECTIONS FOR HORIZONTAL ELLIPTICAL PIPE											
Equiv. Dia. (in.)	(inches)		Min. Thick.	Dimensions (inches)				L Dimension			
	Span	Rise	in.	A	H	W	Overall Width	Slope	Length (in.)	Slope	Length (in.)
18	23	14	.064	8	6	29	45	4:1	16	6:1	24
24	30	19	.064	8	6	36	52	4:1	36	6:1	54
27	34	22	.079	12	9	40	64	4:1	48	6:1	72
30	38	24	.079	12	9	44	68	4:1	56	6:1	84
33	42	27	.109	12	9	48	72	4:1	68	6:1	102
36	45	29	.109	16	12	51	83	4:1	76	6:1	114
42	53	34	.109	16	12	59	91	4:1	96	6:1	144
48	60	38	.109	16	12	66	98	4:1	112	6:1	168
54	68	43	.109	16	12	74	106	4:1	132	6:1	198
60	76	48	.109	16	12	80	112	4:1	152	6:1	228

INDIANA DEPARTMENT OF TRANSPORTATION

SAFETY METAL CULVERT END SECTIONS FOR SMOOTH PIPE

JANUARY 1998

STANDARD DRAWING NO. **E 715-SMES-12**

ANTHONY L. UREMOVICH REGISTERED No. 18095 STATE OF INDIANA PROFESSIONAL ENGINEER

DESIGN STANDARDS ENGINEER

DETAILS PLACED IN THIS FORMAT 11-15-99

/s/ Anthony L. Uremovich 11-15-99
DESIGN STANDARDS ENGINEER DATE

/s/ Firooz Zandi 11-15-99
CHIEF HIGHWAY ENGINEER DATE

ORIGINALLY APPROVED 1-02-98

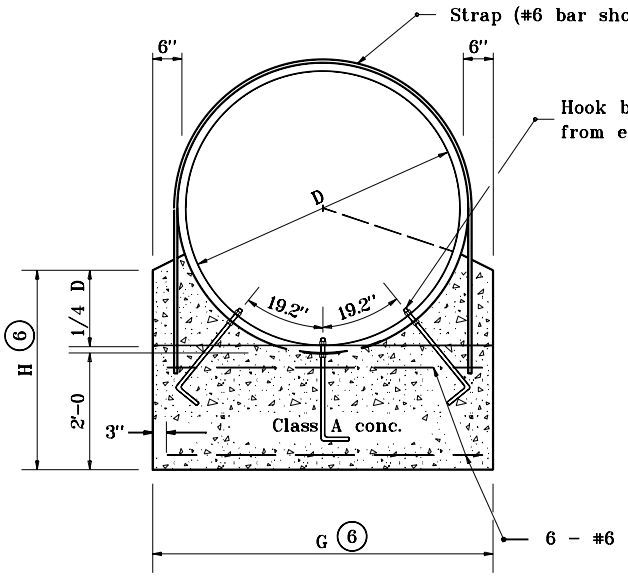

ANCHOR FOR CIRCULAR CORRUGATED METAL PIPE
FRONT ELEVATION

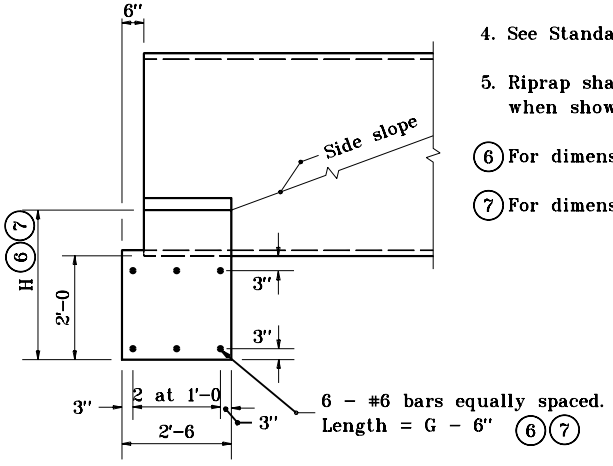

SIDE ELEVATION

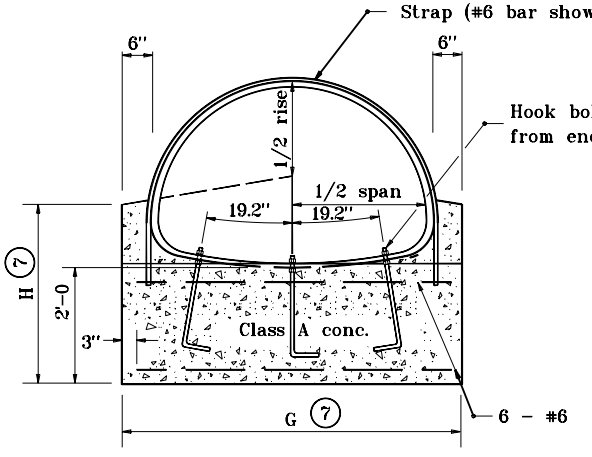

ANCHOR FOR CORRUGATED METAL PIPE-ARCH
FRONT ELEVATION

GENERAL NOTES

1. Anchor straps shall be used at both upstream and downstream ends of all C.M. pipes with a diameter or span of 42" or greater.
2. See Standard Drawing E 715-PASD-01 for anchor strap details.
3. Hook bolts and anchor straps shall be used for all C.M. pipes with a diameter or span of 84" or greater.
4. See Standard Drawing E 715-PAHB-01 for hook bolt details.
5. Riprap shall be placed at the ends of pipe structures when shown on plans.

(6) For dimension chart see Standard Drawing E 715-ANCH-01.

(7) For dimension chart see Standard Drawing E 715-ANCH-02.

LEGEND

C.M. = Corrugated Metal

INDIANA DEPARTMENT OF TRANSPORTATION

SINGLE PIPE CONCRETE ANCHOR

JANUARY 1998

STANDARD DRAWING NO. **E 715-SPCA-01**

ANTHONY L. UREMOVICH REGISTERED No. 18095 STATE OF INDIANA PROFESSIONAL ENGINEER

DESIGN STANDARDS ENGINEER

DETAILS PLACED IN THIS FORMAT	7-27-99
/s/ Anthony L. Uremovich, DESIGN STANDARDS ENGINEER	7-27-99
/s/ Firooz Zandi, CHIEF HIGHWAY ENGINEER	7-27-99
ORIGINALLY APPROVED	1-02-98

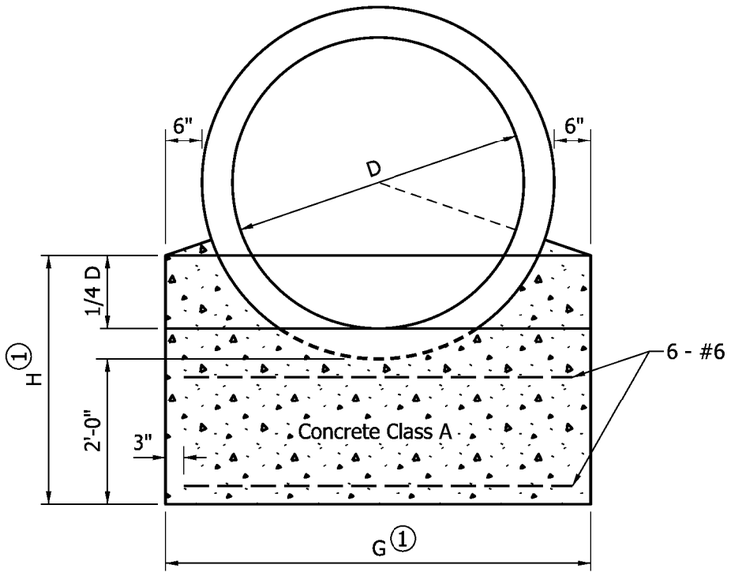

ANCHOR FOR
REINFORCED CONCRETE PIPE

FRONT ELEVATION

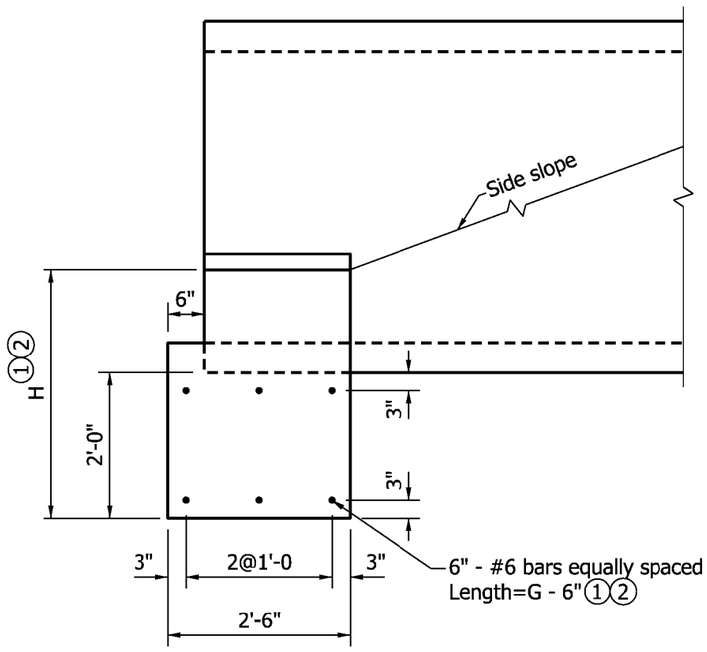

SIDE ELEVATION

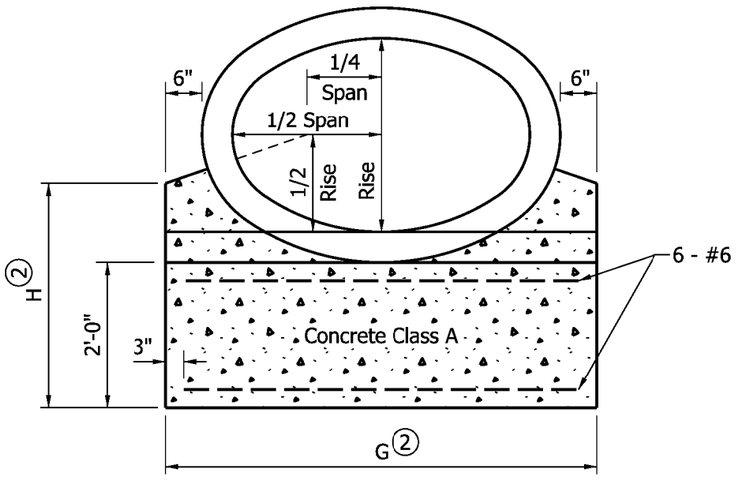

ANCHOR FOR
REINFORCED CONCRETE HORIZONTAL ELLIPTICAL PIPE

FRONT ELEVATION

GENERAL NOTES

(1) For dimension, enter chart on Standard Drawing E 715-ANCH-01 with known dimension D.

(2) For dimension enter chart on Standard Drawing E 715-ANCH-02 with known span and rise.

3. Riprap shall be placed at the ends of pipe structures when shown on plans.

INDIANA DEPARTMENT OF TRANSPORTATION

SINGLE PIPE
CONCRETE ANCHOR

SEPTEMBER 2009

STANDARD DRAWING NO. E 715-SPCA-02

RICHARD L. VanCLEAVE
REGISTERED
No. 9750
STATE OF INDIANA
PROFESSIONAL ENGINEER

DESIGN STANDARDS ENGINEER

/s/ Richard L. VanCleave 09/01/09
DESIGN STANDARDS ENGINEER DATE

/s/ Mark A. Miller 09/01/09
CHIEF HIGHWAY ENGINEER DATE

STEEL STRUCTURAL PLATE PIPE-ARCH

SPAN	RISE	H	R	S	SINGLE PIPE		DOUBLE PIPE		TRIPLE PIPE	
					G	CU.YDS. CONC. 2 ANCHORS	G	CU.YDS. CONC. 2 ANCHORS	G	CU.YDS. CONC. 2 ANCHORS
6'-1	4'-7	3'-11	3'-7½	9'-6	7'-5	3.5	16'-11	8.4	26'-5	13.3
6'-4	4'-9	3'-11	3'-10	9'-10	7'-8	3.6	17'-5	8.6	27'-4	13.6
6'-9	4'-11	4'-0	4'-0½	10'-6	8'-1	3.8	18'-7	9.3	29'-1	14.8
7'-0	5'-1	4'-0	4'-2	10'-10	8'-4	3.9	19'-2	9.5	30'-0	15.1
7'-3	5'-3	3'-11	4'-3½	11'-3	8'-7	4.0	19'-10	9.7	31'-1	15.4
7'-8	5'-5	4'-0	4'-6	11'-10	9'-0	4.2	20'-10	10.4	32'-8	16.5
7'-11	5'-7	4'-0	4'-7½	12'-3	9'-3	4.3	21'-6	10.6	33'-9	16.9
8'-2	5'-9	3'-11	4'-9	12'-6	9'-6	4.4	22'-0	10.7	34'-6	17.0
8'-7	5'-11	4'-1	4'-11½	12'-11	9'-11	4.6	22'-10	11.3	35'-9	18.0
8'-10	6'-1	4'-0	5'-1	13'-2	10'-2	4.7	23'-4	11.4	36'-6	18.1
9'-4	6'-3	4'-2	5'-4	13'-8	10'-8	5.0	24'-4	12.1	38'-0	19.3
9'-6	6'-5	4'-1	5'-5	13'-10	10'-10	5.0	24'-8	12.1	38'-6	19.2
9'-9	6'-7	4'-0	5'-6½	14'-1	11'-1	5.1	25'-2	12.1	39'-3	19.2
10'-3	6'-9	4'-2	5'-9½	14'-7	11'-7	5.4	26'-2	12.9	40'-9	20.4
10'-8	6'-11	4'-4	6'-0	15'-0	12'-0	5.8	27'-0	13.7	42'-0	21.6
10'-11	7'-1	4'-3	6'-1½	15'-3	12'-3	5.8	27'-6	13.7	42'-9	21.6
11'-5	7'-3	4'-6	6'-4½	15'-9	12'-9	6.2	28'-6	14.6	44'-3	23.0
11'-7	7'-5	4'-5	6'-5½	15'-11	12'-11	6.2	28'-10	14.5	44'-9	22.9
11'-10	7'-7	4'-3	6'-7	16'-2	13'-2	6.2	29'-4	14.5	45'-6	22.8
12'-4	7'-9	4'-6	6'-10	16'-8	13'-8	6.6	30'-4	15.4	47'-0	24.3
12'-6	7'-11	4'-4	6'-11	16'-10	13'-10	6.6	30'-8	15.3	47'-6	24.0
12'-8	8'-1	4'-3	7'-0	17'-0	14'-0	6.5	31'-0	15.2	48'-0	23.8
12'-10	8'-4	4'-2	7'-1	17'-2	14'-2	6.5	31'-4	15.1	48'-6	23.7
13'-3	9'-4	5'-0	7'-3½	17'-7	14'-7	7.3	32'-2	17.1	49'-9	26.9
13'-6	9'-6	5'-0	7'-5	17'-10	14'-10	7.4	32'-8	17.2	50'-6	27.0
14'-0	9'-8	5'-0	7'-8	18'-4	15'-4	7.7	33'-8	17.9	52'-0	28.1
14'-2	9'-10	5'-0	7'-9	18'-6	15'-6	7.7	34'-0	17.9	52'-6	28.1
14'-5	10'-0	5'-0	7'-10½	18'-9	15'-9	7.8	34'-6	18.0	53'-3	28.2
14'-11	10'-2	5'-2	8'-1½	19'-3	16'-3	8.2	35'-6	18.9	54'-9	29.6
15'-4	10'-4	5'-2	8'-4	19'-8	16'-8	8.6	36'-4	19.6	56'-0	30.7
15'-7	10'-6	5'-2	8'-5½	19'-11	16'-11	8.6	36'-10	19.7	56'-9	30.8
15'-10	10'-8	5'-2	8'-7	20'-2	17'-2	8.6	37'-4	19.7	57'-6	30.9
16'-3	10'-10	5'-2	8'-9½	20'-7	17'-7	9.0	38'-2	20.5	58'-9	32.0
16'-6	11'-0	5'-5	8'-11	20'-10	17'-10	9.1	38'-8	20.7	59'-6	32.4
17'-0	11'-2	5'-5	9'-2	21'-4	18'-4	9.5	39'-8	21.6	61'-0	33.7
17'-2	11'-4	5'-5	9'-3	21'-6	18'-6	9.5	40'-0	21.5	61'-6	33.6
17'-5	11'-6	5'-5	9'-4½	21'-9	18'-9	9.5	40'-6	21.6	62'-3	33.7
17'-11	11'-8	5'-5	9'-7½	22'-3	19'-3	9.9	41'-6	22.5	63'-9	35.0
18'-1	11'-10	5'-6	9'-8½"	22'-5	19'-5	9.9	41'-10	22.7	64'-3	35.4
18'-7	12'-0	5'-6	9'-11½"	22'-11	19'-11	10.3	42'-10	23.4	65'-9	36.7
18'-9	12'-2	5'-6	10'-0½"	23'-1	20'-1	10.3	43'-2	23.6	66'-3	36.7
19'-3	12'-4	5'-6	10'-3½"	23'-7	20'-7	10.8	44'-2	24.6	67'-9	38.8
19'-6	12'-6	5'-6	10'-5	23'-10	20'-10	10.8	44'-8	24.6	68'-6	38.2
19'-8	12'-8	5'-6	10'-6	24'-0	21'-0	10.7	45'-0	24.4	69'-0	37.9
19'-11	12'-10	5'-6	10'-7½"	24'-3	21'-3	10.7	45'-6	24.2	69'-9	37.7
20'-5	13'-0	5'-6	10'-10½"	24'-9	21'-9	11.2	46'-5	25.4	71'-3	39.4
20'-7	13'-2	5'-6	10'-11½"	24'-11	21'-11	11.1	46'-10	25.3	71'-9	39.5

INDIANA DEPARTMENT OF TRANSPORTATION

CONCRETE ANCHOR TABLES

JANUARY 1998

STANDARD DRAWING NO. E 717-ANCH-01

ANTHONY L. UREMOVICH REGISTERED No. 18095 STATE OF INDIANA PROFESSIONAL ENGINEER

DESIGN STANDARDS ENGINEER

DETAILS PLACED IN THIS FORMAT 11-15-99

/s/ Anthony L. Uremovich 11-15-99
DESIGN STANDARDS ENGINEER DATE

/s/ Firooz Zandi 11-15-99
CHIEF HIGHWAY ENGINEER DATE

ORIGINALLY APPROVED 1-02-98

STEEL OR ALUMINUM ALLOY STRUCTURAL PLATE PIPE

D	H	R	S	SINGLE PIPE		DOUBLE PIPE		TRIPLE PIPE	
				G	CU.YDS. CONC. 2 ANCHORS	G	CU.YDS. CONC. 2 ANCHORS	G	CU.YDS. CONC. 2 ANCHORS
5'-0	3'-5	3'-2	7'-10	6'-4	3.1	14'-2	7.1	22'-0	11.0
5'-6	3'-7	3'-5	8'-7	6'-10	3.4	15'-5	7.9	24'-0	12.4
6'-0	3'-8	3'-8	9'-4	7'-4	3.7	16'-8	8.6	26'-0	13.6
6'-6	3'-10	3'-11	10'-1	7'-10	4.1	17'-11	9.5	28'-0	15.0
7'-0	3'-11	4'-2	10'-10	8'-4	4.3	19'-2	10.3	30'-0	16.2
7'-6	4'-1	4'-5	11'-7	8'-10	4.7	20'-5	11.3	32'-0	17.8
8'-0	4'-2	4'-8	12'-4	9'-4	5.0	21'-8	12.1	34'-0	19.1
8'-6	4'-4	4'-11	12'-10	9'-10	5.4	22'-8	12.9	35'-6	20.4
9'-0	4'-5	5'-2	13'-4	10'-4	5.7	23'-8	13.5	37'-0	21.4
9'-6	4'-7	5'-5	13'-10	10'-10	6.1	24'-8	14.4	38'-6	22.7
10'-0	4'-8	5'-8	14'-4	11'-4	6.4	25'-8	15.1	40'-0	23.7
10'-6	4'-10	5'-11	14'-10	11'-10	6.8	26'-8	16.0	41'-6	25.2
11'-0	4'-11	6'-2	15'-4	12'-4	7.2	27'-8	16.7	43'-0	26.2
11'-6	5'-1	6'-5	15'-10	12'-10	7.6	28'-8	17.6	44'-6	27.7
12'-0	5'-2	6'-8	16'-4	13'-4	7.9	29'-8	18.3	46'-0	28.7
12'-6	5'-4	6'-11	16'-10	13'-10	8.4	30'-8	19.3	47'-6	30.3
13'-0	5'-5	7'-2	17'-4	14'-4	8.7	31'-8	20.0	49'-0	31.3
13'-6	5'-7	7'-5	17'-10	14'-10	9.2	32'-8	21.1	50'-6	32.9
14'-0	5'-8	7'-8	18'-4	15'-4	9.6	33'-8	21.8	52'-0	34.0
14'-6	5'-10	7'-11	18'-10	15'-10	10.1	34'-8	22.9	53'-6	35.7
15'-0	5'-11	8'-2	19'-4	16'-4	10.4	35'-8	23.6	55'-0	36.8
15'-6	6'-1	8'-5	19'-10	16'-10	10.9	36'-8	24.7	56'-6	38.5
16'-0	6'-2	8'-8	20'-4	17'-4	11.3	37'-8	25.5	58'-0	39.7
16'-6	6'-4	8'-11	20'-10	17'-10	11.9	38'-8	26.7	59'-0	41.5
17'-0	6'-5	9'-2	21'-4	18'-4	12.3	39'-8	27.5	61'-0	42.7
17'-6	6'-7	9'-5	21'-10	18'-10	12.8	40'-8	28.6	62'-6	44.5
18'-0	6'-8	9'-8	22'-4	19'-4	13.2	41'-8	29.5	64'-0	45.7
18'-6	6'-10	9'-11	22'-10	19'-10	13.8	42'-8	30.7	65'-6	47.6
19'-0	6'-11	10'-2	23'-4	20'-4	14.2	43'-8	31.5	67'-0	48.8
19'-6	7'-1	10'-5	23'-10	20'-10	14.8	44'-8	32.8	68'-6	50.8
20'-0	7'-2	10'-8	24'-4	21'-4	15.2	45'-8	33.6	70'-0	52.1
20'-6	7'-4	10'-11	24'-10	21'-10	15.8	46'-8	34.9	71'-6	54.2
21'-0	7'-5	11'-2	25'-4	22'-4	16.2	47'-8	35.8	73'-0	55.6

GENERAL NOTES

1. Refer to Standard Drawing E 717-SPCA-01 for single pipe anchor details.
2. Refer to Standard Drawings E 717-MPCA-01 and E 717-MPCA-02 for multiple pipe anchor details.

INDIANA DEPARTMENT OF TRANSPORTATION

CONCRETE ANCHOR TABLES

JANUARY 1998

STANDARD DRAWING NO. **E 717-ANCH-02**

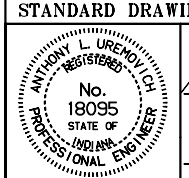

DESIGN STANDARDS ENGINEER

DETAILS PLACED IN THIS FORMAT 11-15-99

/s/ Anthony L. Uremovich 11-15-99
DESIGN STANDARDS ENGINEER DATE

/s/ Firooz Zandi 11-15-99
CHIEF HIGHWAY ENGINEER DATE

ORIGINALLY APPROVED 1-02-98

ALUMINUM ALLOY STRUCTURAL PLATE PIPE-ARCH

SPAN	RISE	H	R	S	SINGLE PIPE		DOUBLE PIPE		TRIPLE PIPE	
					G	CU.YDS. CONC. 2 ANCHORS	G	m^3 CONC., 2 ANCHORS	G	m^3 CONC., 2 ANCHORS
6'-7	5'-8	5'-0	4'-0	10'-4	8'-0	4.2	18'-4	10.3	28'-8	16.4
6'-11	5'-9	5'-0	4'-2	10'-10	8'-4	4.3	19'-2	10.7	30'-0	17.1
7'-3	5'-11	5'-0	4'-4	11'-4	8'-8	4.4	20'-0	11.1	31'-4	17.7
7'-9	6'-0	5'-0	4'-7	12'-1	9'-2	4.8	21'-3	11.9	33'-4	19.1
8'-1	6'-1	5'-0	4'-9	12'-6	9'-6	4.9	22'-0	12.2	34'-6	19.6
8'-5	6'-3	5'-2	4'-11	12'-10	9'-10	5.0	22'-8	12.6	35'-6	20.1
8'-10	6'-4	5'-2	5'-1½	13'-3	10'-3	5.3	23'-6	13.2	36'-9	21.1
9'-3	6'-5	5'-2	5'-4	13'-8	10'-8	5.5	24'-4	13.5	38'-0	21.6
9'-7	6'-6	5'-2	5'-6	14'-0	11'-0	5.6	25'-0	13.7	39'-0	21.9
9'-11	6'-8	5'-2	5'-8	14'-4	11'-4	5.7	25'-8	13.9	40'-0	22.2
10'-3	6'-9	5'-2	5'-10	14'-8	11'-8	5.8	26'-4	14.1	41'-0	22.4
10'-9	6'-10	5'-5	6'-1	15'-2	12'-2	6.3	27'-4	15.2	42'-6	24.2
11'-1	7'-0	5'-5	6'-3	15'-6	12'-6	6.4	28'-0	15.4	43'-6	24.4
11'-5	7'-1	5'-5	6'-5	15'-10	12'-10	6.4	28'-8	15.5	44'-6	24.6
11'-9	7'-2	5'-5	6'-7	16'-2	13'-2	6.5	29'-4	15.7	45'-6	24.8
12'-3	7'-3	5'-6	6'-10	16'-8	13'-8	7.1	30'-4	16.8	47'-0	26.6
12'-7	7'-5	5'-6	7'-0	17'-0	14'-0	7.1	31'-0	16.9	48'-0	26.8
12'-11	7'-6	5'-6	7'-2	17'-4	14'-4	7.2	31'-8	17.1	49'-0	26.9
13'-1	8'-2	5'-6	7'-3	17'-6	14'-6	7.7	32'-0	18.1	49'-6	28.5
13'-1	8'-4	5'-6	7'-3	17'-6	14'-6	7.2	32'-0	17.1	49'-6	26.9
13'-11	8'-5	5'-9	7'-8	18'-4	15'-4	8.5	33'-8	19.7	52'-0	31.0
14'-0	8'-7	5'-9	7'-8½	18'-5	15'-5	7.9	33'-10	18.7	52'-3	29.4
13'-11	9'-5	5'-9	7'-8	18'-4	15'-4	8.2	33'-8	19.2	52'-0	30.2
14'-3	9'-7	5'-9	7'-10	18'-8	15'-8	8.3	34'-4	19.4	53'-0	30.5
14'-8	9'-8	5'-9	8'-0½	19'-1	16'-1	8.6	35'-2	20.1	54'-3	31.5
14'-11	9'-10	5'-9	8'-2	19'-4	16'-4	8.7	35'-8	20.2	55'-0	31.7
15'-4	10'-0	6'-0	8'-4½	19'-9	16'-9	9.1	36'-6	21.1	56'-3	33.1
15'-7	10'-2	6'-0	8'-6	20'-0	17'-0	9.1	37'-0	21.2	57'-0	33.2
16'-1	10'-4	6'-0	8'-9	20'-6	17'-6	9.6	38'-0	22.1	58'-6	34.5
16'-4	10'-6	6'-0	8'-10½	20'-9	17'-9	9.6	38'-6	22.1	59'-3	34.6
16'-9	10'-8	6'-0	9'-1	21'-2	18'-2	10.0	39'-4	22.9	60'-6	35.8
17'-0	10'-10	6'-0	9'-2½	21'-5	18'-5	10.0	39'-10	22.9	61'-3	35.9
17'-3	11'-0	6'-0	9'-4	21'-8	18'-8	10.0	40'-4	23.0	62'-0	35.9
17'-9	11'-2	6'-0	9'-7	22'-2	19'-2	10.5	41'-4	24.1	63'-6	37.7
18'-0	11'-4	6'-3	9'-8½"	22'-5	19'-5	10.6	41'-10	24.3	64'-3	38.0
18'-5	11'-6	6'-3	9'-11	22'-10	19'-10	11.0	42'-8	25.2	65'-6	39.5
18'-8	11'-8	6'-3	10'-0½"	23'-1	20'-1	11.0	43'-2	25.2	66'-3	39.4
19'-2	11'-9	6'-3	10'-3½"	23'-7	20'-7	11.5	44'-2	26.1	67'-9	40.7
19'-5	11'-11	6'-3	10'-5	23'-10	20'-10	11.5	44'-8	26.2	68'-6	40.9
19'-10	12'-1	6'-3	10'-7½"	24'-3	21'-3	12.0	45'-6	27.2	69'-9	42.5
20'-1	12'-3	6'-3	10'-9	24'-6	21'-6	12.0	46'-0	27.1	70'-6	42.3
20'-1	12'-6	6'-3	10'-9	24'-6	21'-6	11.4	46'-0	25.8	70'-6	40.1
20'-10	12'-7	6'-6	11'-1½"	25'-3	22'-3	12.5	47'-6	28.3	72'-9	44.0
21'-1	12'-9	6'-6	11'-3	25'-6	22'-6	12.5	48'-0	28.1	73'-6	43.8
21'-6	12'-11	6'-6	11'-5½"	25'-11	22'-11	13.0	48'-10	29.4	74'-9	45.9

GENERAL NOTES

1. Refer to Standard Drawing E 717-SPCA-01 for single pipe anchor details.

2. Refer to Standard Drawings E 717-MPCA-01 and E 717-MPCA-02 for multiple pipe anchor details.

INDIANA DEPARTMENT OF TRANSPORTATION

CONCRETE ANCHOR TABLES

JANUARY 1998

STANDARD DRAWING NO. E 717-ANCH-03

ANTHONY L. UREMOVICH REGISTERED No. 18095 STATE OF INDIANA PROFESSIONAL ENGINEER

DESIGN STANDARDS ENGINEER

DETAILS PLACED IN THIS FORMAT 11-15-99

/s/ Anthony L. Uremovich 11-15-99
DESIGN STANDARDS ENGINEER DATE

/s/ Firooz Zandi 11-15-99
CHIEF HIGHWAY ENGINEER DATE

ORIGINALLY APPROVED 1-02-98

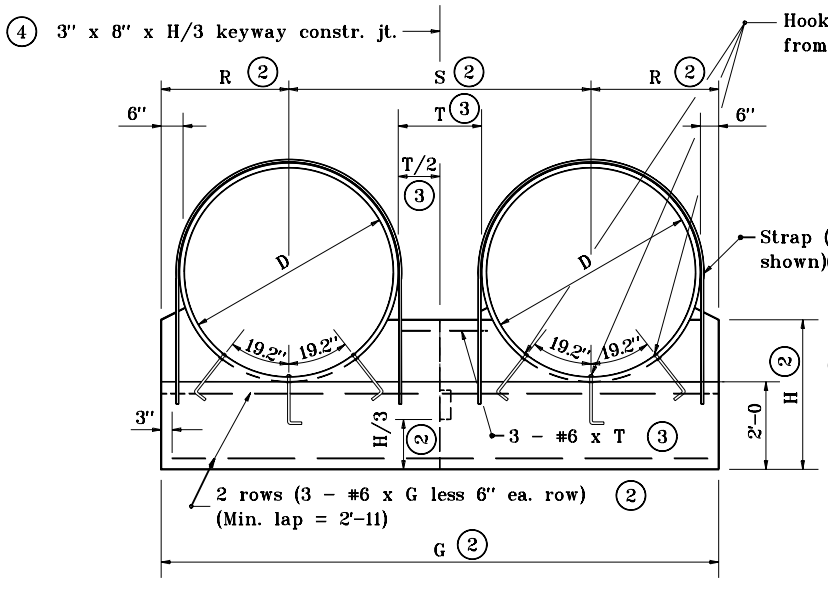

ANCHOR FOR DOUBLE PIPE INSTALLATION
FRONT ELEVATION

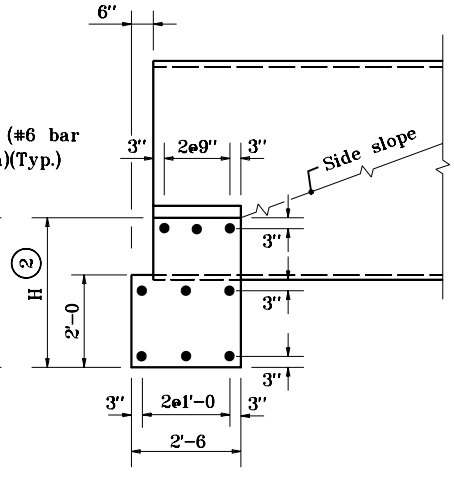

SECTION THROUGH ANCHOR

GENERAL NOTES

1. Circular pipes shown. For details of structural plate pipe-arches alternates, see partial elevations on Standard Drawing E 717-MPCA-02.

(2) For dimension, enter chart on Standard Drawing E 717-ANCH-01 with known dimension D.

(3) T = Clear distance between pipes.
For D less than 48", T = 2'-0.
For D of 48" to 96" T = 1/2 D
For D greater than 96", T = 4'-0.

(4) No joint required if G is less than or equal to 30'. One joint required if G is greater than 30' but less than or equal to 42'. Two joints required if G is greater than 42'.

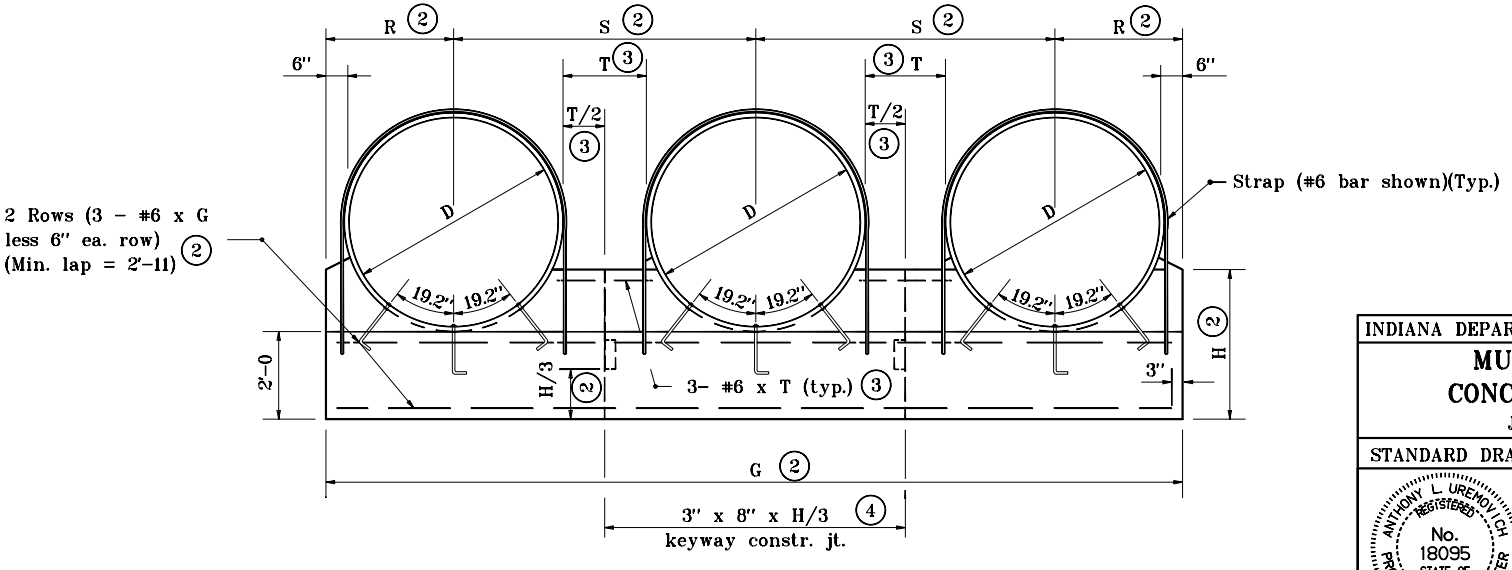

ANCHOR FOR TRIPLE PIPE INSTALLATION
FRONT ELEVATION

INDIANA DEPARTMENT OF TRANSPORTATION

MULTIPLE PIPE CONCRETE ANCHOR

JANUARY 1998

STANDARD DRAWING NO. **E 717-MPCA-01**

ANTHONY L. UREMOVICH REGISTERED No. 18095 STATE OF INDIANA PROFESSIONAL ENGINEER

DESIGN STANDARDS ENGINEER

DETAILS PLACED IN THIS FORMAT 7-27-99

/s/ Anthony L. Uremovich 7-27-99
DESIGN STANDARDS ENGINEER DATE

/s/ Firooz Zandi 7-27-99
CHIEF HIGHWAY ENGINEER DATE

ORIGINALLY APPROVED 1-02-98

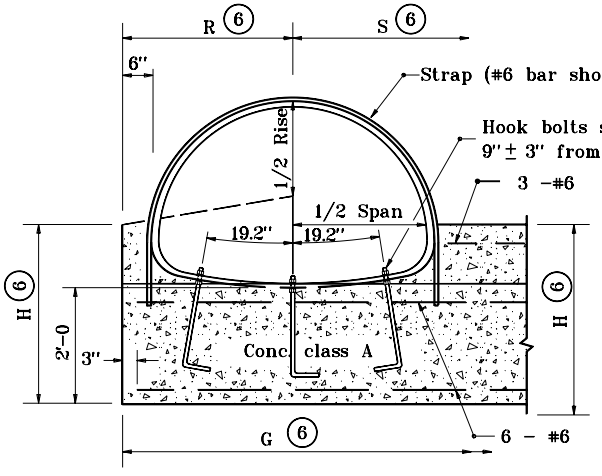

ANCHOR FOR STRUCTURAL PLATE PIPE-ARCH
PARTIAL ELEVATION

GENERAL NOTES

1. Anchor straps shall be used at both upstream and downstream ends of all structural plate pipes and pipe-arches.
2. See Standard Drawing E 715-PASD-01 for anchor strap details.
3. Hook bolts and anchor straps shall be used for all structural plate pipes and pipe-arches with a diameter or span of 84" or greater.
4. See Standard Drawing E 715-PAHB-01 for hook bolt details.
5. Riprap shall be placed at the ends of pipe structures when shown on the plans.

(6) For dimension, enter chart on Standard Drawings E 717-ANCH-01 or E 717-ANCH-02 with known dimension D or span and rise.

INDIANA DEPARTMENT OF TRANSPORTATION

MULTIPLE PIPE CONCRETE ANCHOR

JANUARY 1998

STANDARD DRAWING NO. **E 717-MPCA-02**

ANTHONY L. UREMOVICH REGISTERED No. 18095 STATE OF INDIANA PROFESSIONAL ENGINEER

DESIGN STANDARDS ENGINEER

DETAILS PLACED IN THIS FORMAT 7-27-99

/s/ Anthony L. Uremovich 7-27-99
DESIGN STANDARDS ENGINEER DATE

/s/ Firooz Zandi 7-27-99
CHIEF HIGHWAY ENGINEER DATE

ORIGINALLY APPROVED 1-02-98

9" x 2½" STRUCTURAL PLATE ALUMINUM ALLOY PIPE (STEEL BOLTED)
HEIGHT OF COVER LIMITS (ft.)

	AREA (sft)	DIAMETER (in.)	THICKNESS (in.)										
			0.100		0.125		0.150		0.175		0.200		
			MIN.	MAX.	MIN.	MAX.	MIN.	MAX.	MIN.	MAX.	MIN.	MAX.	
	19.6	60	1.0	31.1	1.0	45.5	1.0	60.1	1.0	70.7	1.0	81.5	
	23.8	66	1.0	28.2	1.0	41.4	1.0	54.6	1.0	64.3	1.0	74.1	
	28.3	72	1.0	25.9	1.0	37.9	1.0	50.0	1.0	58.9	1.0	67.9	
	33.2	78	1.0	23.9	1.0	35.0	1.0	46.2	1.0	54.4	1.0	62.7	
	38.5	84	1.0	22.2	1.0	32.5	1.0	42.9	1.0	50.5	1.0	58.2	
	44.2	90	1.1	20.7	1.0	30.3	1.0	40.0	1.0	47.1	1.0	54.3	
	50.3	96	1.1	19.4	1.0	28.4	1.0	37.5	1.0	44.2	1.0	50.9	
	56.7	102	1.1	18.3	1.1	26.7	1.1	35.3	1.1	41.6	1.1	47.9	
	63.6	108	1.2	17.2	1.1	25.3	1.1	33.3	1.1	39.3	1.1	45.3	
	70.9	114	1.3	16.3	1.2	23.9	1.2	31.6	1.2	37.2	1.2	42.9	
	78.5	120	1.3	15.5	1.3	22.7	1.3	30.0	1.3	35.3	1.3	40.7	
	86.6	126	1.4	14.8	1.3	21.6	1.3	28.6	1.3	33.7	1.3	38.8	
	95.0	132	1.4	14.1	1.4	20.7	1.4	27.3	1.4	32.1	1.4	37.0	
	103.9	138	1.5	13.5	1.4	19.8	1.4	26.1	1.4	30.7	1.4	35.4	
	113.1	144	1.6	12.9	1.5	18.9	1.5	25.0	1.5	29.4	1.5	33.9	
	122.7	150			1.6	18.2	1.6	24.0	1.6	28.3	1.6	32.6	
	132.7	156			1.6	17.5	1.6	23.1	1.6	27.2	1.6	31.3	
	143.1	162					1.7	22.2	1.7	26.2	1.7	30.2	
	153.9	168					1.8	21.4	1.8	25.2	1.8	29.1	
	165.1	174					1.8	20.7	1.8	24.4	1.8	28.1	
	176.7	180							1.9	23.5	1.9	27.1	
	188.7	186							1.9	22.8	1.9	26.3	
	201.1	192									2.0	25.4	
	213.8	198									2.1	24.7	
	227.0	204									2.1	23.9	
	240.5	210											
	254.5	216											
	268.8	222											
	283.5	228											

NOTE:

1. The tabulated cover depths shall be measured from the bottom of the asphalt or concrete pavement to the top of the pipe.

INDIANA DEPARTMENT OF TRANSPORTATION

PIPE HEIGHT OF COVER LIMITS

JANUARY 1998

STANDARD DRAWING NO. **E 717-PHCL-01**

ANTHONY L. UREMOVICH REGISTERED No. 18095 STATE OF INDIANA PROFESSIONAL ENGINEER

DESIGN STANDARDS ENGINEER

DETAILS PLACED IN THIS FORMAT 11-15-99

/s/ Anthony L. Uremovich 11-15-99
DESIGN STANDARDS ENGINEER DATE

/s/ Firooz Zandi 11-15-99
CHIEF HIGHWAY ENGINEER DATE

ORIGINALLY APPROVED 1-02-98

9" x 2½" STRUCTURAL PLATE ALUMINUM ALLOY PIPE (STEEL BOLTED)
HEIGHT OF COVER LIMITS (ft.)

	AREA (sft.)	DIAMETER (in.)	THICKNESS (in.)										
			0.225		0.250								
			MIN.	MAX.	MIN.	MAX.							
	19.6	60	1.0	92.4	1.0	100.0							
	23.8	66	1.0	84.0	1.0	94.0							
	28.3	72	1.0	77.0	1.0	86.2							
	33.2	78	1.0	71.1	1.0	79.5							
	38.5	84	1.0	66.0	1.0	73.8							
	44.2	90	1.0	61.6	1.0	68.9							
	50.3	96	1.0	57.7	1.0	64.6							
	56.7	102	1.1	54.3	1.1	60.8							
	63.6	108	1.1	51.3	1.1	57.4							
	70.9	114	1.2	48.6	1.2	54.4							
	78.5	120	1.3	46.2	1.3	51.7							
	86.6	126	1.3	44.0	1.3	49.2							
	95.0	132	1.4	42.0	1.4	47.0							
	103.9	138	1.4	40.1	1.4	44.9							
	113.1	144	1.5	38.5	1.5	43.1							
	122.7	150	1.6	36.9	1.6	41.3							
	132.7	156	1.6	35.5	1.6	39.7							
	143.1	162	1.7	34.2	1.7	38.3							
	153.9	168	1.8	33.0	1.8	36.9							
	165.1	174	1.8	31.8	1.8	35.6							
	176.7	180	1.9	30.8	1.9	34.4							
	188.7	186	1.9	29.8	1.9	33.3							
	201.1	192	2.0	28.8	2.0	32.3							
	213.8	198	2.1	28.0	2.1	31.3							
	227.0	204	2.1	27.1	2.1	30.4							
	240.5	210	2.2	26.4	2.2	29.5							
	254.5	216	2.3	25.6	2.3	28.7							
	268.8	222			2.3	27.9							
	283.5	228			2.4	27.2							

NOTE:

1. The tabulated cover depths shall be measured from the bottom of the asphalt or concrete pavement to the top of the pipe.

INDIANA DEPARTMENT OF TRANSPORTATION

PIPE HEIGHT OF COVER LIMITS

JANUARY 1998

STANDARD DRAWING NO. **E 717-PHCL-02**

ANTHONY L. UREMOVICH REGISTERED No. 18095 STATE OF INDIANA PROFESSIONAL ENGINEER

DESIGN STANDARDS ENGINEER

DETAILS PLACED IN THIS FORMAT 11-15-99

/s/ Anthony L. Uremovich 11-15-99
DESIGN STANDARDS ENGINEER DATE

/s/ Firooz Zandi 11-15-99
CHIEF HIGHWAY ENGINEER DATE

ORIGINALLY APPROVED 1-02-98

9" x 2½" STRUCTURAL PLATE ALUMINUM ALLOY PIPE-ARCH (STEEL BOLTED)
HEIGHT OF COVER LIMITS (ft.)

Rc (in.)	SPAN (ft.-in.)	RISE (ft.-in.)	AREA (sft.)	THICKNESS (in.)									
				0.100		0.125		0.150		0.175		0.200	
				MIN.	MAX.	MIN.	MAX.	MIN.	MAX.	MIN.	MAX.	MIN.	MAX.
31.75	6'-7	5'-8	29	1.0	23.6	1.0	26.7	1.0	26.7	1.0	26.7	1.0	26.7
31.75	6'-11	5'-9	31	1.0	22.4	1.0	25.4	1.0	25.4	1.0	25.4	1.0	25.4
31.75	7'-3	5'-11	34	1.1	21.4	1.0	24.2	1.0	24.2	1.0	24.2	1.0	24.2
31.75	7'-9	6'-0	36	1.1	20.0	1.0	22.7	1.0	22.7	1.0	22.7	1.0	22.7
31.75	8'-1	6'-1	39	1.1	19.2	1.1	21.7	1.1	21.7	1.1	21.7	1.1	21.7
31.75	8'-5	6'-3	41	1.1	18.4	1.1	20.9	1.1	20.9	1.1	20.9	1.1	20.9
31.75	8'-10	6'-4	44	1.2	17.6	1.1	19.9	1.1	19.9	1.1	19.9	1.1	19.9
31.75	9'-3	6'-5	47	1.2	16.8	1.2	19.0	1.2	19.0	1.2	19.0	1.2	19.0
31.75	9'-7	6'-6	49	1.3	16.2	1.2	18.3	1.2	18.3	1.2	18.3	1.2	18.3
31.75	9'-11	6'-8	52	1.3	15.6	1.2	17.7	1.2	17.7	1.2	17.7	1.2	17.7
31.75	10'-3	6'-9	55	1.3	15.1	1.3	17.1	1.3	17.1	1.3	17.1	1.3	17.1
31.75	10'-9	6'-10	58	1.4	14.4	1.3	16.3	1.3	16.3	1.3	16.3	1.3	16.3
31.75	11'-1	7'-0	61	1.5	14.0	1.4	15.8	1.4	15.8	1.4	15.8	1.4	15.8
31.75	11'-5	7'-1	64	1.5	13.6	1.4	15.4	1.4	15.4	1.4	15.4	1.4	15.4
31.75	11'-9	7'-2	67	1.5	13.2	1.5	14.9	1.5	14.9	1.5	14.9	1.5	14.9
31.75	12'-3	7'-3	70	1.6	12.6	1.5	14.3	1.5	14.3	1.5	14.3	1.5	14.3
31.75	12'-7	7'-5	73	1.7	11.7	1.6	13.9	1.6	13.9	1.6	13.9	1.6	13.9
31.75	12'-11	7'-6	77	1.7	11.3	1.6	13.6	1.6	13.6	1.6	13.6	1.6	13.6
31.75	13'-1	8'-2	83	1.7	11.2	1.6	13.4	1.6	13.4	1.6	13.4	1.6	13.4
31.75	13'-1	8'-4	86	1.7	11.2	1.6	13.4	1.6	13.4	1.6	13.4	1.6	13.4
31.75	13'-11	8'-5	90	1.9	10.4	1.7	12.0	1.7	12.0	1.7	12.0	1.7	12.0
31.75	14'-0	8'-7	94	1.9	10.3	1.8	11.9	1.8	11.9	1.8	11.9	1.8	11.9
31.75	13'-11	9'-5	101	1.9	10.4	1.7	12.0	1.7	12.0	1.7	12.0	1.7	12.0
31.75	14'-3	9'-7	105	1.9	10.1	1.8	11.7	1.8	11.7	1.8	11.7	1.8	11.7
31.75	14'-8	9'-8	109			1.8	11.3	1.8	11.3	1.8	11.3	1.8	11.3
31.75	14'-11	9'-10	114			1.9	11.1	1.9	11.1	1.9	11.1	1.9	11.1

NOTE:

1. The tabulated cover depths shall be measured from the bottom of the asphalt or concrete pavement to the top of the pipe.

2. A specific design shall be performed for structures with corner radii other than those tabulated above to determine the appropriate cover depth limits.

INDIANA DEPARTMENT OF TRANSPORTATION

PIPE HEIGHT OF COVER LIMITS

JANUARY 1998

STANDARD DRAWING NO. **E 717-PHCL-03**

ANTHONY L. UREMOVICH REGISTERED No. 18095 STATE OF INDIANA PROFESSIONAL ENGINEER

DESIGN STANDARDS ENGINEER

DETAILS PLACED IN THIS FORMAT 11-15-99

/s/ Anthony L. Uremovich 11-15-99
DESIGN STANDARDS ENGINEER DATE

/s/ Firooz Zandi 11-15-99
CHIEF HIGHWAY ENGINEER DATE

ORIGINALLY APPROVED 1-02-98

9" x 2½" STRUCTURAL PLATE ALUMINUM ALLOY PIPE-ARCH (STEEL BOLTED)
HEIGHT OF COVER LIMITS (ft.)

Rc (in.)	RISE (ft.-in.)	RISE (ft.-in.)	AREA (sft.)	THICKNESS (in.)									
				0.225		0.250							
				MIN.	MAX.	MIN.	MAX.						
31.75	6'-7	5'-8	29	1.0	26.7	1.0	26.7						
31.75	6'-11	5'-9	31	1.0	25.4	1.0	25.4						
31.75	7'-3	5'-11	34	1.0	24.2	1.0	24.2						
31.75	7'-9	6'-0	36	1.0	22.7	1.0	22.7						
31.75	8'-1	6'-1	39	1.1	21.7	1.1	21.7						
31.75	8'-5	6'-3	41	1.1	20.9	1.1	20.9						
31.75	8'-10	6'-4	44	1.1	19.9	1.1	19.9						
31.75	9'-3	6'-5	47	1.2	19.0	1.2	19.0						
31.75	9'-7	6'-6	49	1.2	18.3	1.2	18.3						
31.75	9'-11	6'-8	52	1.2	17.7	1.2	17.7						
31.75	10'-3	6'-9	55	1.3	17.1	1.3	17.1						
31.75	10'-9	6'-10	58	1.3	16.3	1.3	16.3						
31.75	11'-1	7'-0	61	1.4	15.8	1.4	15.8						
31.75	11'-5	7'-1	64	1.4	15.4	1.4	15.4						
31.75	11'-9	7'-2	67	1.5	14.9	1.5	14.9						
31.75	12'-3	7'-3	70	1.5	14.3	1.5	14.3						
31.75	12'-7	7'-5	73	1.6	13.9	1.6	13.9						
31.75	12'-11	7'-6	77	1.6	13.6	1.6	13.6						
31.75	13'-1	8'-2	83	1.6	13.4	1.6	13.4						
31.75	13'-1	8'-4	86	1.6	13.4	1.6	13.4						
31.75	13'-11	8'-5	90	1.7	12.0	1.7	12.0						
31.75	14'-0	8'-7	94	1.8	11.9	1.8	11.9						
31.75	13'-11	9'-5	101	1.7	12.0	1.7	12.0						
31.75	14'-3	9'-7	105	1.8	11.7	1.8	11.7						
31.75	14'-8	9'-8	109	1.8	11.3	1.8	11.3						
31.75	14'-11	9'-10	114	1.9	11.1	1.9	11.1						

NOTE:

1. The tabulated cover depths shall be measured from the bottom of the asphalt or concrete pavement to the top of the pipe.

2. A specific design shall be performed for structures with corner radii other than those tabulated above to determine the appropriate cover depth limits.

INDIANA DEPARTMENT OF TRANSPORTATION

PIPE HEIGHT OF COVER LIMITS

JANUARY 1998

STANDARD DRAWING NO. **E 717-PHCL-04**

ANTHONY L. UREMOVICH REGISTERED No. 18095 STATE OF INDIANA PROFESSIONAL ENGINEER

DESIGN STANDARDS ENGINEER

DETAILS PLACED IN THIS FORMAT 11-15-99

/s/ Anthony L. Uremovich 11-15-99
DESIGN STANDARDS ENGINEER DATE

/s/ Firooz Zandi 11-15-99
CHIEF HIGHWAY ENGINEER DATE

ORIGINALLY APPROVED 1-02-98

9" x 2½" STRUCTURAL PLATE ALUMINUM ALLOY PIPE-ARCH (STEEL BOLTED)
HEIGHT OF COVER LIMITS (ft.)

Rc (in.)	SPAN (ft.-in.)	RISE (ft.-in.)	AREA (sft)	THICKNESS (in.)									
				0.100		0.125		0.150		0.175		0.200	
				MIN.	MAX.	MIN.	MAX.	MIN.	MAX.	MIN.	MAX.	MIN.	MAX.
31.75	15-4	10-0	118			1.9	10.7	1.9	10.7	1.9	10.7	1.9	10.7
31.75	15-7	10-2	123			2.0	10.5	2.0	10.5	2.0	10.5	2.0	10.5
31.75	16-1	10-4	127			2.0	10.1	2.0	10.1	2.0	10.1	2.0	10.1
31.75	16-4	10-6	132					2.0	9.9	2.0	9.9	2.0	9.9
31.75	16-9	10-8	136					2.1	9.6	2.1	9.6	2.1	9.6
31.75	17-0	10-10	141					2.1	9.5	2.1	9.5	2.1	9.5
31.75	17-3	11-0	146					2.2	9.3	2.2	9.3	2.2	9.3
31.75	17-9	11-2	151							2.2	8.9	2.2	8.9
31.75	18-0	11-4	156							2.3	8.8	2.3	8.8
31.75	18-5	11-6	161							2.3	8.5	2.3	8.5
31.75	18-8	11-8	167							2.3	8.4	2.3	8.4
31.75	19-2	11-9	172									2.4	8.0
31.75	19-5	11-11	177									2.4	7.9
31.75	19-10	12-1	182									2.5	7.7
31.75	20-1	12-3	188									2.5	7.5
31.75	20-1	12-6	194										
31.75	20-10	12-7	199										
31.75	21-1	12-9	205										
31.75	21-6	12-11	211										
47.00	20-1	13-11	216										
47.00	20-7	14-3	224										
47.00	21-5	14-7	241										
47.00	21-11	14-11	254										
47.00	22-8	15-3	267										

NOTE:

1. The tabulated cover depths shall be measured from the bottom of the asphalt or concrete pavement to the top of the pipe.

2. A specific design shall be performed for structures with corner radii other than those tabulated above to determine the appropriate cover depth limits.

INDIANA DEPARTMENT OF TRANSPORTATION

PIPE HEIGHT OF COVER LIMITS

JANUARY 1998

STANDARD DRAWING NO. **E 717-PHCL-05**

ANTHONY L. UREMOVICH REGISTERED No. 18095 STATE OF INDIANA PROFESSIONAL ENGINEER

DESIGN STANDARDS ENGINEER

DETAILS PLACED IN THIS FORMAT 11-15-99

/s/ Anthony L. Uremovich 11-15-99
DESIGN STANDARDS ENGINEER DATE

/s/ Firooz Zandi 11-15-99
CHIEF HIGHWAY ENGINEER DATE

ORIGINALLY APPROVED 1-02-98

9" x 2½" STRUCTURAL PLATE ALUMINUM ALLOY PIPE-ARCH (STEEL BOLTED)
HEIGHT OF COVER LIMITS (ft.)

Rc (in.)	SPAN (ft.-in.)	RISE (ft.-in.)	AREA (sft)	THICKNESS (in.)									
				0.225		0.250							
				MIN.	MAX.	MIN.	MAX.						
31.75	15-4	10-0	118	1.9	10.7	1.9	10.7						
31.75	15-7	10-2	123	2.0	10.5	2.0	10.5						
31.75	16-1	10-4	127	2.0	10.1	2.0	10.1						
31.75	16-4	10-6	132	2.0	9.9	2.0	9.9						
31.75	16-9	10-8	136	2.1	9.6	2.1	9.6						
31.75	17-0	10-10	141	2.1	9.5	2.1	9.5						
31.75	17-3	11-0	146	2.2	9.3	2.2	9.3						
31.75	17-9	11-2	151	2.2	8.9	2.2	8.9						
31.75	18-0	11-4	156	2.3	8.8	2.3	8.8						
31.75	18-5	11-6	161	2.3	8.5	2.3	8.5						
31.75	18-8	11-8	167	2.3	8.4	2.3	8.4						
31.75	19-2	11-9	172	2.4	8.0	2.4	8.0						
31.75	19-5	11-11	177	2.4	7.9	2.4	7.9						
31.75	19-10	12-1	182	2.5	7.7	2.5	7.7						
31.75	20-1	12-3	188	2.5	7.5	2.5	7.5						
31.75	20-1	12-6	194	2.5	7.5	2.5	7.5						
31.75	20-10	12-7	199	2.6	7.1	2.6	7.1						
31.75	21-1	12-9	205	2.6	7.0	2.6	7.0						
31.75	21-6	12-11	211	2.7	6.7	2.7	6.7						
47.00	20-1	13-11	216			2.5	12.4						
47.00	20-7	14-3	224			2.6	12.1						
47.00	21-5	14-7	241			2.7	11.5						
47.00	21-11	14-11	254			2.7	11.2						
47.00	22-8	15-3	267			2.8	10.8						

NOTE:

1. The tabulated cover depths shall be measured from the bottom of the asphalt or concrete pavement to the top of the pipe.

2. A specific design shall be performed for structures with corner radii other than those tabulated above to determine the appropriate cover depth limits.

INDIANA DEPARTMENT OF TRANSPORTATION

PIPE HEIGHT OF COVER LIMITS

JANUARY 1998

STANDARD DRAWING NO. **E 717-PHCL-06**

ANTHONY L. UREMOVICH REGISTERED No. 18095 STATE OF INDIANA PROFESSIONAL ENGINEER

DESIGN STANDARDS ENGINEER

DETAILS PLACED IN THIS FORMAT 11-15-99

/s/ Anthony L. Uremovich 11-15-99
DESIGN STANDARDS ENGINEER DATE

/s/ Firooz Zandi 11-15-99
CHIEF HIGHWAY ENGINEER DATE

ORIGINALLY APPROVED 1-02-98

6" x 2" STRUCTURAL PLATE STEEL PIPE (BOLTED)
HEIGHT OF COVER LIMITS (ft)

	AREA (sft)	DIAMETER (in.)	THICKNESS (in.)										
			0.111		0.140		0.170						
			MIN.	MAX.	MIN.	MAX.	MIN.	MAX.					
	19.6	60	1.0	47.7	1.0	68.8	1.0	90.0					
	23.8	66	1.0	43.4	1.0	62.6	1.0	81.8					
	28.3	72	1.0	39.8	1.0	57.4	1.0	75.0					
	33.2	78	1.0	36.7	1.0	52.9	1.0	69.2					
	38.5	84	1.0	34.1	1.0	49.2	1.0	64.2					
	44.2	90	1.0	31.8	1.0	45.9	1.0	60.0					
	50.3	96	1.0	29.8	1.0	43.0	1.0	56.2					
	56.7	102	1.1	28.1	1.1	40.5	1.1	52.9					
	63.6	108	1.1	26.5	1.1	38.2	1.1	50.0					
	70.9	114	1.2	25.1	1.2	36.2	1.2	47.3					
	78.5	120	1.3	23.8	1.3	34.4	1.3	45.0					
	86.6	126	1.3	22.7	1.3	32.8	1.3	42.8					
	95.0	132	1.4	21.7	1.4	31.3	1.4	40.9					
	103.9	138	1.4	20.7	1.4	29.9	1.4	39.1					
	113.1	144	1.5	19.9	1.5	28.7	1.5	37.5					
	122.7	150	1.6	19.1	1.6	27.5	1.6	36.0					
	132.7	156	1.6	18.3	1.6	26.4	1.6	34.6					
	143.1	162	1.7	17.6	1.7	25.5	1.7	33.3					
	153.9	168	1.8	17.0	1.8	24.6	1.8	32.1					
	165.1	174	1.8	16.4	1.8	23.7	1.8	31.0					
	176.7	180	1.9	15.9	1.9	22.9	1.9	30.0					
	188.7	186	1.9	15.4	1.9	22.2	1.9	29.0					
	201.1	192			2.0	21.5	2.0	28.1					
	213.8	198			2.1	20.8	2.1	27.2					
	227.0	204			2.1	20.2	2.1	26.4					
	240.5	210			2.2	19.6	2.2	25.7					
	254.5	216					2.3	25.0					
	268.8	222					2.3	24.3					
	283.5	228					2.4	23.0					
	298.6	234					2.4	7.0					
	314.2	240											
	330.1	246											
	346.4	252											

NOTE:

1. The tabulated cover depths shall be measured from the bottom of the asphalt or concrete pavement to the top of the pipe.

2. The tabulated plate thickness reflects the required thickness for top and side plates. Refer to 908.09 (a) for the required bottom plate thickness.

INDIANA DEPARTMENT OF TRANSPORTATION

PIPE HEIGHT OF COVER LIMITS

JANUARY 1998

STANDARD DRAWING NO. **E 717-PHCL-07**

ANTHONY L. UREMOVICH REGISTERED No. 18095 STATE OF INDIANA PROFESSIONAL ENGINEER

DESIGN STANDARDS ENGINEER

DETAILS PLACED IN THIS FORMAT 11-15-99

/s/ Anthony L. Uremovich 11-15-99
DESIGN STANDARDS ENGINEER DATE

/s/ Firooz Zandi 11-15-99
CHIEF HIGHWAY ENGINEER DATE

ORIGINALLY APPROVED 1-02-98

6" x 2" STRUCTURAL PLATE STEEL PIPE (BOLTED)
HEIGHT OF COVER LIMITS (in.)

AREA (sft)	DIAMETER (in.)	THICKNESS (in.)							
		0.188		0.218		0.249		0.280	
		MIN.	MAX.	MIN.	MAX.	MIN.	MAX.	MIN.	MAX.
19.6	60	1.0	100.0	1.0	100.0	1.0	100.0	1.0	100.0
23.8	66	1.0	93.9	1.0	100.0	1.0	100.0	1.0	100.0
28.3	72	1.0	86.1	1.0	100.0	1.0	100.0	1.0	100.0
33.2	78	1.0	79.4	1.0	95.7	1.0	100.0	1.0	100.0
38.5	84	1.0	73.8	1.0	88.8	1.0	100.0	1.0	100.0
44.2	90	1.0	68.8	1.0	82.9	1.0	97.7	1.0	100.0
50.3	96	1.0	64.5	1.0	77.7	1.0	91.6	1.0	100.0
56.7	102	1.1	60.7	1.1	73.2	1.1	86.2	1.1	94.1
63.6	108	1.1	57.4	1.1	69.1	1.1	84.1	1.1	88.8
70.9	114	1.2	54.3	1.2	65.4	1.2	77.1	1.2	84.2
78.5	120	1.3	51.6	1.3	62.2	1.3	73.3	1.3	80.0
86.6	126	1.3	49.2	1.3	59.2	1.3	69.8	1.3	76.1
95.0	132	1.4	46.9	1.4	56.5	1.4	66.6	1.4	72.7
103.9	138	1.4	44.9	1.4	54.1	1.4	63.7	1.4	69.5
113.1	144	1.5	43.0	1.5	51.8	1.5	61.1	1.5	66.6
122.7	150	1.6	41.3	1.6	49.7	1.6	58.6	1.6	64.0
132.7	156	1.6	39.7	1.6	47.8	1.6	56.4	1.6	61.5
143.1	162	1.7	38.2	1.7	46.0	1.7	54.3	1.7	59.2
153.9	168	1.8	36.9	1.8	44.4	1.8	52.3	1.8	57.1
165.1	174	1.8	35.6	1.8	42.9	1.8	50.5	1.8	55.1
176.7	180	1.9	34.4	1.9	41.4	1.9	48.8	1.9	53.3
188.7	186	1.9	33.3	1.9	40.1	1.9	47.3	1.9	51.6
210.1	192	2.0	32.2	2.0	38.8	2.0	45.8	2.0	50.0
213.8	198	2.1	31.3	2.1	37.7	2.1	44.4	2.1	48.4
227.0	204	2.1	30.3	2.1	36.6	2.1	43.1	2.1	47.0
240.5	210	2.1	29.5	2.1	35.5	2.1	41.9	2.1	45.7
254.5	216	2.3	28.7	2.3	34.5	2.3	40.7	2.3	44.4
268.8	222	2.3	27.9	2.3	33.6	2.3	39.6	2.3	43.2
283.5	228	2.4	27.1	2.4	32.7	2.4	38.5	2.4	42.1
298.6	234	2.4	26.4	2.4	31.9	2.4	37.6	2.4	41.0
314.2	240	2.5	25.8	2.5	31.1	2.5	36.6	2.5	40.0
330.1	246	2.5	25.2	2.6	30.3	2.6	35.7	2.6	39.0
346.4	252			2.6	28.8	2.6	34.0	2.6	38.0

NOTE:

1. The tabulated cover depths shall be measured from the bottom of the asphalt or concrete pevement to the top of the pipe.

2. The tabulated thickness reflects the required thickness for top and side plates. Refer to 908.08 (a) for the required bottom plate thickness.

INDIANA DEPARTMENT OF TRANSPORTATION

PIPE HEIGHT OF COVER LIMITS

JANUARY 1998

STANDARD DRAWING NO. **E 717-PHCL-08**

ANTHONY L. UREMOVICH REGISTERED No. 18095 STATE OF INDIANA PROFESSIONAL ENGINEER

DESIGN STANDARDS ENGINEER

DETAILS PLACED IN THIS FORMAT 11-15-99

/s/ Anthony L. Uremovich 11-15-99
DESIGN STANDARDS ENGINEER DATE

/s/ Firooz Zandi 11-15-99
CHIEF HIGHWAY ENGINEER DATE

ORIGINALLY APPROVED 1-02-98

6" x 2" STRUCTURAL PLATE STEEL PIPE-ARCH (BOLTED)
HEIGHT OF COVER LIMITS (ft.)

Rc (in.)	SPAN (ft.-in.)	RISE (ft.-in.)	AREA (sft)	THICKNESS (in.)									
				0.111		0.140 thru 0.280							
				MIN.	MAX.	MIN.	MAX.						
18	6-1	4-7	22	1.3	16.4	1.3	16.4						
18	6'-4	4-9	24	1.3	15.7	1.3	15.7						
18	6-9	4-11	26	1.4	14.8	1.4	14.8						
18	7-0	5-1	28	1.4	14.2	1.4	14.2						
18	7-3	5-3	31	1.5	13.7	1.5	13.7						
18	7-8	5-5	33	1.6	13.0	1.6	13.0						
18	7-11	5-7	35	1.6	12.6	1.6	12.6						
18	8-2	5-9	38	1.7	12.2	1.7	12.2						
18	8-7	5-11	40	1.8	11.6	1.8	11.6						
18	8-10	6-1	43	1.8	11.3	1.8	11.3						
18	9-4	6-3	46	2.0	10.7	2.0	10.7						
18	9-6	6-5	49	2.0	10.5	2.0	10.5						
18	9-9	6-7	52	2.1	10.2	2.1	10.2						
18	10-3	6-9	55	2.1	8.7	2.1	8.7						
18	10-8	6-11	58	2.1	8.3	2.1	8.3						
18	10-11	7-1	61	2.2	8.0	2.2	8.0						
18	11-5	7-3	64	2.3	7.5	2.3	7.5						
18	11-7	7-5	67	2.4	7.3	2.4	7.3						
18	11-10	7-7	71	2.5	7.1	2.5	7.1						
18	12-4	7-9	74	2.6	6.6	2.6	6.6						
18	12-6	7-11	78	2.7	6.5	2.7	6.5						
18	12-8	8-1	81	2.8	6.3	2.8	6.3						
18	12-10	8-4	85	2.8	6.2	2.8	6.2						
31	13-3	9-4	97	1.7	12.4	1.7	12.4						
31	13-6	9-6	102	1.7	12.1	1.7	12.1						
31	14-0	9-8	105	1.8	11.6	1.8	11.6						
31	14-2	9-10	109	1.8	11.5	1.8	11.5						
31	14-5	10-0	114	1.8	11.2	1.8	11.2						
31	14-11	10-2	118	1.9	10.8	1.9	10.8						

NOTE:

1. The tabulated cover depths shall be measured from the bottom of the asphalt or concrete pavement to the top of the pipe.

2. A specific design shall be performed for structures with corner radii other than those tabulated above to determine the appropriate cover depth limits.

3. The tabulated plate thickness reflects the required thickness for top and side plates. Refer to 908.09 (a) for the required bottom plate thickness.

INDIANA DEPARTMENT OF TRANSPORTATION

PIPE HEIGHT OF COVER LIMITS

JANUARY 1998

STANDARD DRAWING NO. **E 717-PHCL-09**

ANTHONY L. UREMOVICH REGISTERED No. 18095 STATE OF INDIANA PROFESSIONAL ENGINEER

DESIGN STANDARDS ENGINEER

DETAILS PLACED IN THIS FORMAT 11-15-99

/s/ Anthony L. Uremovich 11-15-99
DESIGN STANDARDS ENGINEER DATE

/s/ Firooz Zandi 11-15-99
CHIEF HIGHWAY ENGINEER DATE

ORIGINALLY APPROVED 1-02-98

6" x 2" STRUCTURAL PLATE STEEL PIPE-ARCH (BOLTED)
HEIGHT OF COVER LIMITS (ft.)

Rc (in.)	SPAN (ft.-in.)	RISE (ft.-in.)	AREA (sft)	THICKNESS (in.)									
				0.111		0.140 thru 0.280							
				MIN.	MAX.	MIN.	MAX.						
31	15-4	10-4	123	1.9	10.5	1.9	10.5						
31	15-7	10-6	127	2.0	10.3	2.0	10.3						
31	15-10	10-8	132	2.0	10.1	2.0	10.1						
31	16-3	10-10	137	2.0	9.7	2.0	9.7						
31	16-6	11-11	142	2.1	9.5	2.1	9.5						
31	17-0	11-2	146	2.1	9.2	2.1	9.2						
31	17-2	11-4	151	2.2	9.1	2.2	9.1						
31	17-5	11-6	157	2.2	8.9	2.2	8.9						
31	17-6	11-8	161	2.2	8.6	2.2	8.6						
31	18-1	11-10	167	2.3	8.5	2.3	8.5						
31	18-7	12-0	172	2.3	8.2	2.3	8.2						
31	18-9	12-2	177	2.3	8.0	2.3	8.0						
31	19-3	12-4	182			2.4	7.7						
31	19-6	12-6	188			2.4	7.6						
31	19-8	12-8	194			2.5	7.5						
31	19-11	12-10	200			2.5	7.4						
31	20-5	13-0	205			2.6	7.1						
31	20-7	13-2	211			2.6	7.0						

NOTE:

1. The tabulated cover depths shall be measured from the bottom of the asphalt or concrete pavement to the top of the pipe.

2. A specific design shall be performed for structures with corner radii other than those tabulated above to determine the appropriate cover depth limits.

3. The tabulated plate thickness reflects the required thickness for top and side plates. Refer to 908.09 (a) for the required bottom plate thickness.

INDIANA DEPARTMENT OF TRANSPORTATION

PIPE HEIGHT OF COVER LIMITS

JANUARY 1998

STANDARD DRAWING NO. **E 717-PHCL-10**

ANTHONY L. UREMOVICH REGISTERED No. 18095 STATE OF INDIANA PROFESSIONAL ENGINEER

DESIGN STANDARDS ENGINEER

DETAILS PLACED IN THIS FORMAT 11-15-99

/s/ Anthony L. Uremovich 11-15-99
DESIGN STANDARDS ENGINEER DATE

/s/ Firooz Zandi 11-15-99
CHIEF HIGHWAY ENGINEER DATE

ORIGINALLY APPROVED 1-02-98

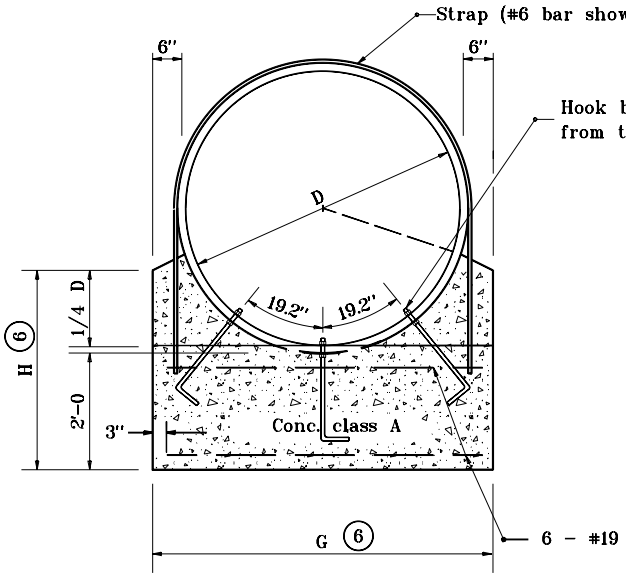

ANCHOR FOR STRUCTURAL PLATE PIPE
FRONT ELEVATION

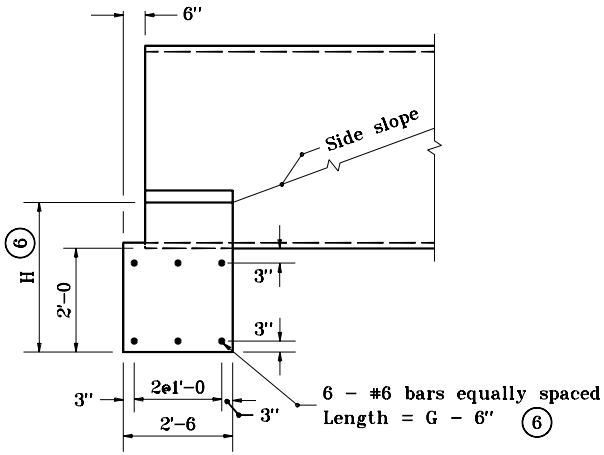

SIDE ELEVATION

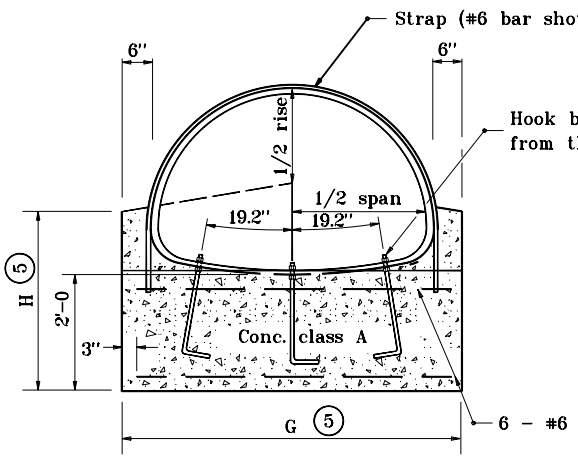

ANCHOR FOR STRUCTURAL
PLATE PIPE-ARCH
FRONT ELEVATION

GENERAL NOTES

1. Anchor straps shall be used at both upsteam and downstream ends of all structural plate pipes and pipe-arches.
2. See Standard Drawing E 715-PASD-01 for anchor strap details.
3. Hook bolts, and anchor straps shall be used at all structural plate pipes and pipe arches with a diameter or span of 84" or greater.
4. See Standard Drawing E 715-PAHB-01 for hook bolt details.

(5) For dimension, enter chart on Standard Drawing E 717-ANCH-01 or E 717-ANCH-03 with known span and rise.

(6) For dimension, enter chart on Standard Drawing E 717-ANCH-02 with known dimension D.

INDIANA DEPARTMENT OF TRANSPORTATION

SINGLE STRUCTURAL PLATE PIPE CONCRETE ANCHOR

JANUARY 1998

STANDARD DRAWING NO. **E 717-SPCA-01**

ANTHONY L. UREMOVICH REGISTERED No. 18095 STATE OF INDIANA PROFESSIONAL ENGINEER

DESIGN STANDARDS ENGINEER

DETAILS PLACED IN THIS FORMAT 7-27-99

/s/ Anthony L. Uremovich 7-27-99
DESIGN STANDARDS ENGINEER — DATE

/s/ Firooz Zandi 7-27-99
CHIEF HIGHWAY ENGINEER — DATE

ORIGINALLY APPROVED 1-02-98

INDEX	
SHEET NO.	SUBJECT
1	Underdrain Drawing Index and General Notes
2	Underdrain Details
3	Underdrain Details
4	Outlet Protector, Type 1
5	Outlet Protector, Type 2
6	Outlet Protector, Type 3
7	Outlet Protector Rodent Screen

APPROXIMATE OUTLET PROTECTOR QUANTITIES			
TYPE	CONCRETE, CLASS A (cys)	REINFORCING BARS (lb)	SODDING (sys)
1	0.8	29	4.9
2	0.6	25	4.0
3	0.3	22	3.2

INDIANA DEPARTMENT OF TRANSPORTATION

UNDERDRAIN DRAWING INDEX
AND GENERAL NOTES

SEPTEMBER 2017

STANDARD DRAWING NO. E 718-UNDR-01

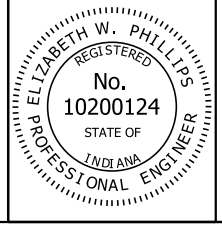

/s/ Elizabeth W. Phillips 08/26/16
DESIGN STANDARDS ENGINEER DATE

/s/ Mark A. Miller 09/19/16
CHIEF ENGINEER DATE

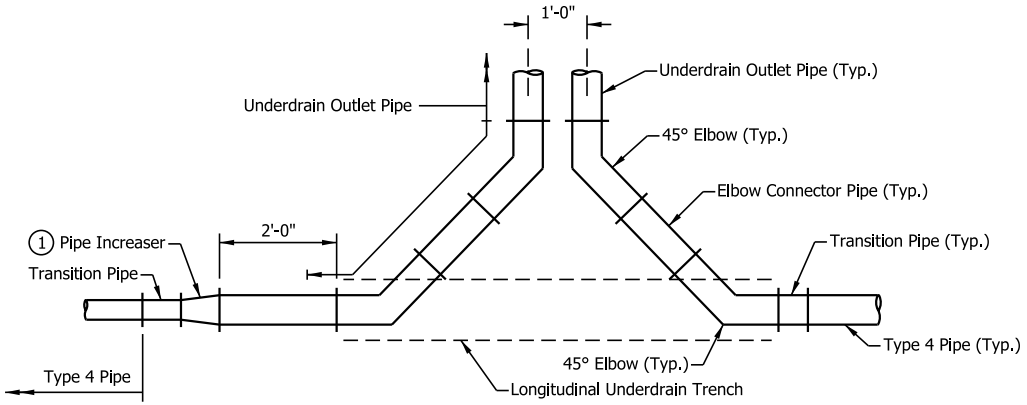

TWIN OUTLET DETAIL-PLAN VIEW

NOTE:

1 If the underdrain pipe and the outlet pipe are of different sizes an increaser of the same material as the outlet pipe shall be installed 2 ft from the transition pipe and the 45° elbow.

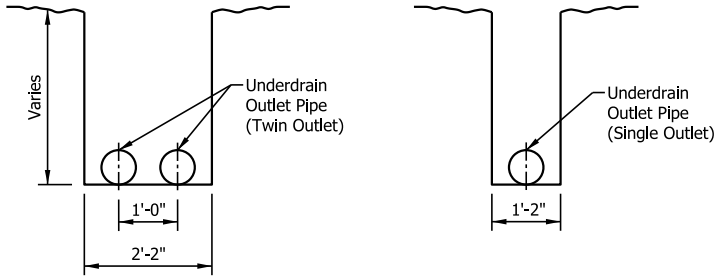

OUTLET TRENCH DETAILS

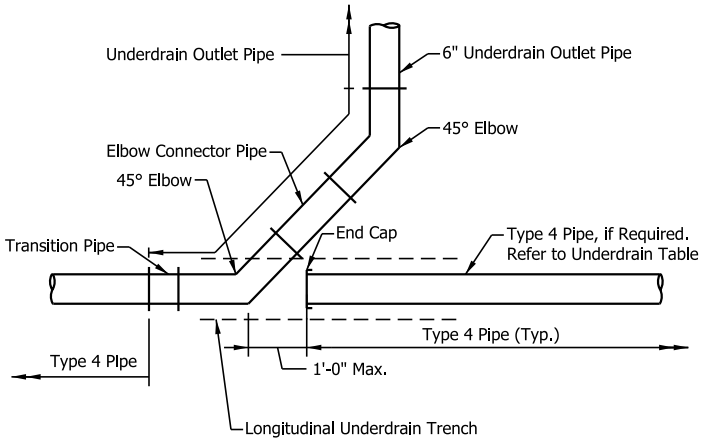

SINGLE OUTLET DETAIL-PLAN VIEW

INDIANA DEPARTMENT OF TRANSPORTATION

UNDERDRAIN DETAILS

SEPTEMBER 2017

STANDARD DRAWING NO. E 718-UNDR-02

ELIZABETH W. PHILLIPS REGISTERED No. 10200124 STATE OF INDIANA PROFESSIONAL ENGINEER

/s/ Elizabeth W. Phillips 08/26/16
DESIGN STANDARDS ENGINEER DATE

/s/ Mark A. Miller 09/19/16
CHIEF ENGINEER DATE

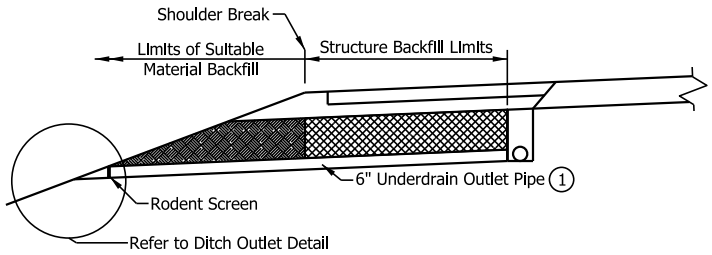

OUTSIDE SHOULDER INSTALLATION

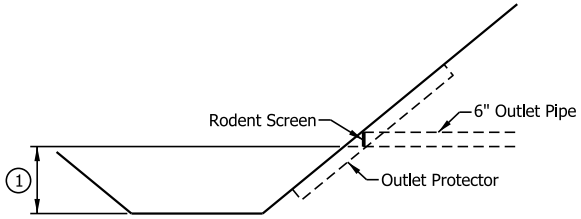

DITCH OUTLET DETAIL

NOTE:

(1) If underdrain outlet pipe elevations are not shown on Underdrain Table, the minimum outlet pipe slope shall be 0.3%. The minimum freeboard between the outlet pipe outfall and the ditch line shall be 1'-0" for median ditches and 2'-0" for side ditches.

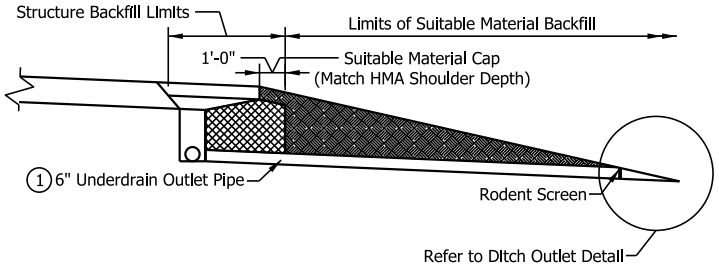

MEDIAN SHOULDER INSTALLATION

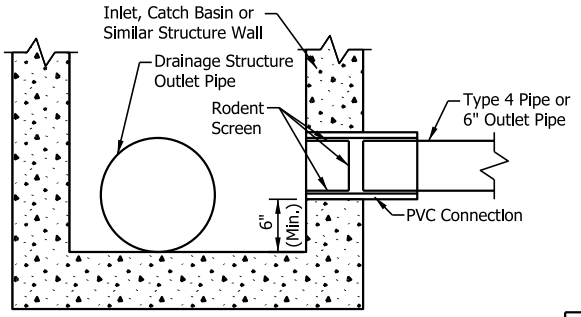

DRAINAGE STRUCTURE OUTLET DETAIL

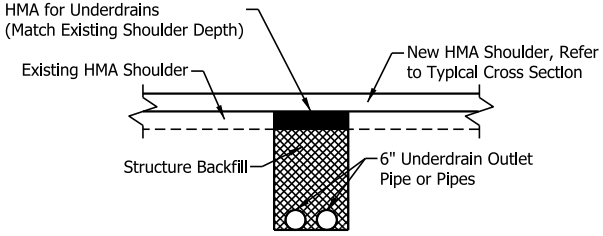

RETROFIT UNDERDRAIN OUTLET DETAIL (UNDER PAVED SHOULDER)

INDIANA DEPARTMENT OF TRANSPORTATION

UNDERDRAIN DETAILS

SEPTEMBER 2017

STANDARD DRAWING NO. E 718-UNDR-03

ELIZABETH W. PHILLIPS REGISTERED No. 10200124 STATE OF INDIANA PROFESSIONAL ENGINEER

/s/ Elizabeth W. Phillips 08/26/16
DESIGN STANDARDS ENGINEER DATE

/s/ Mark A. Miller 09/19/16
CHIEF ENGINEER DATE

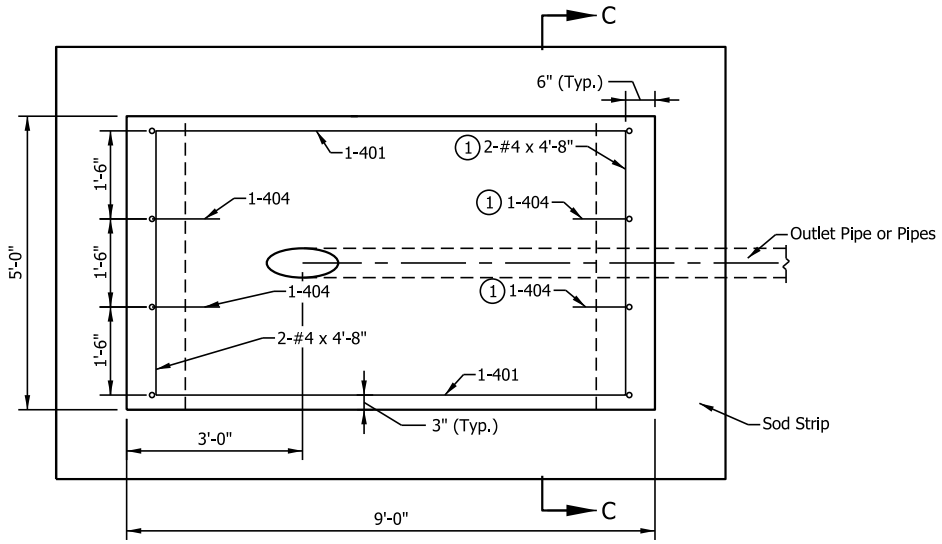

PLAN VIEW

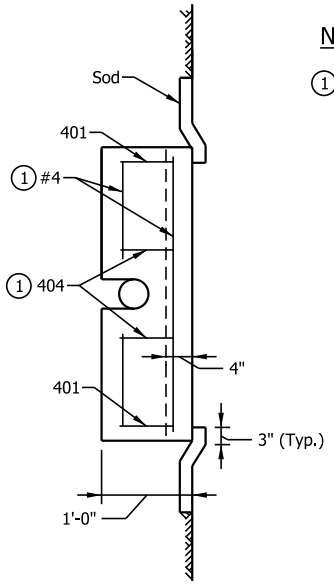

SECTION C-C

NOTE:

1 The #4 transverse bars in the upslope lug may be field cut to accommodate the outlet pipe or pipes. The 404 bars in the upslope lug may be moved to accommodate the outlet pipe or pipes.

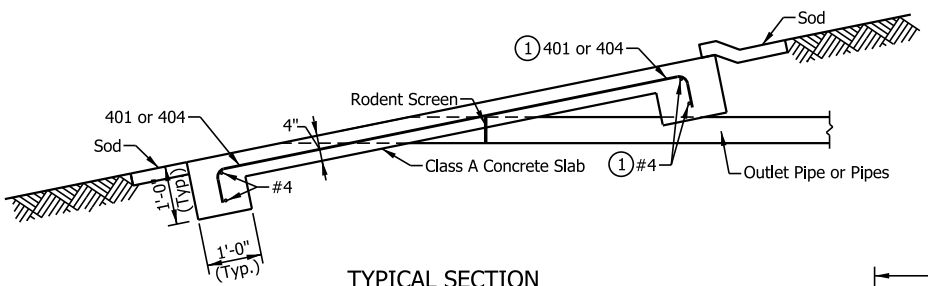

TYPICAL SECTION

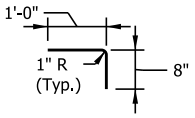

404 x 1'-8"

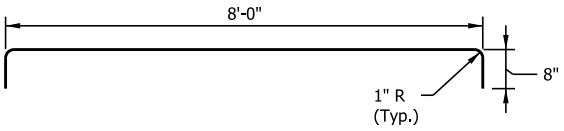

401 X 9'-4"

INDIANA DEPARTMENT OF TRANSPORTATION

OUTLET PROTECTOR, TYPE 1

SEPTEMBER 2017

STANDARD DRAWING NO. E 718-UNDR-04

ELIZABETH W. PHILLIPS REGISTERED No. 10200124 STATE OF INDIANA PROFESSIONAL ENGINEER

/s/ Elizabeth W. Phillips 08/26/16
DESIGN STANDARDS ENGINEER DATE

/s/ Mark A. Miller 09/19/16
CHIEF ENGINEER DATE

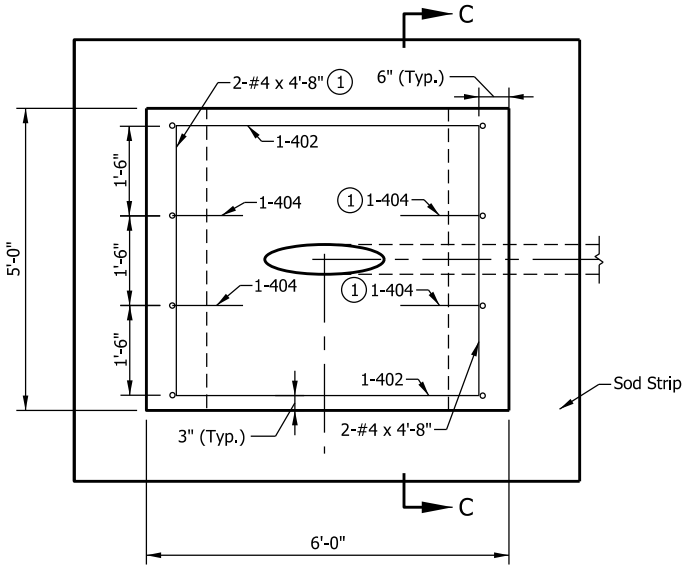

PLAN VIEW

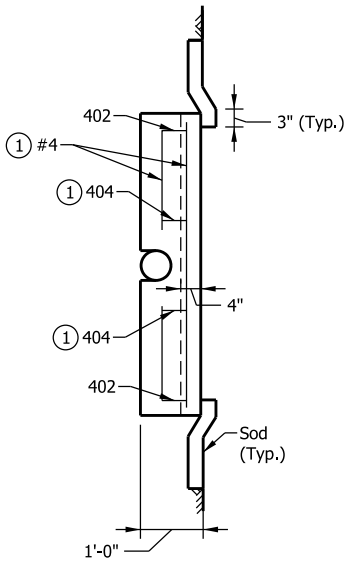

SECTION C-C

NOTE:

(1) The #4 transverse bars in the upslope lug may be field cut to accommodate the outlet pipe or pipes. The 404 bars in the upslope lug may be moved to accommodate the outlet pipe or pipes.

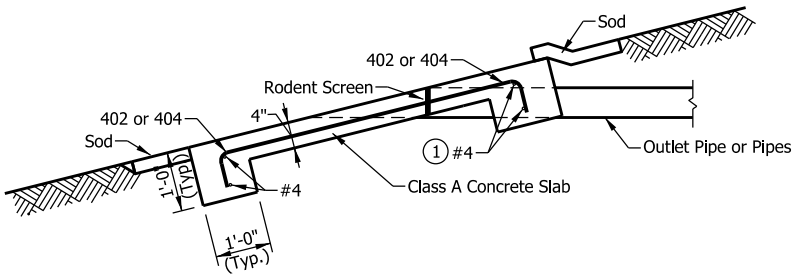

TYPICAL SECTION

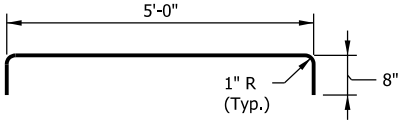

402 X 6'-4"

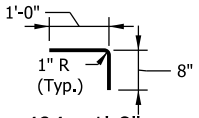

404 x 1'-8"

INDIANA DEPARTMENT OF TRANSPORTATION

OUTLET PROTECTOR, TYPE 2

SEPTEMBER 2017

STANDARD DRAWING NO. E 718-UNDR-05

ELIZABETH W. PHILLIPS REGISTERED No. 10200124 STATE OF INDIANA PROFESSIONAL ENGINEER

/s/ Elizabeth W. Phillips 08/26/16
DESIGN STANDARDS ENGINEER DATE

/s/ Mark A. Miller 09/19/16
CHIEF ENGINEER DATE

NOTE:

(1) The #4 transverse bars in the upslope lug may be field cut to accommodate the outlet pipe or pipes. The 404 bars in the upslope lug may be moved to accommodate the outlet pipe or pipes.

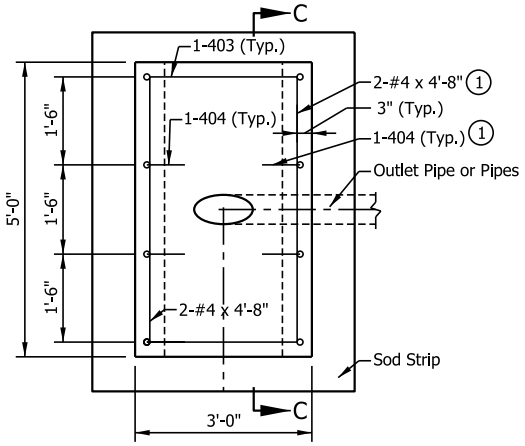

PLAN VIEW

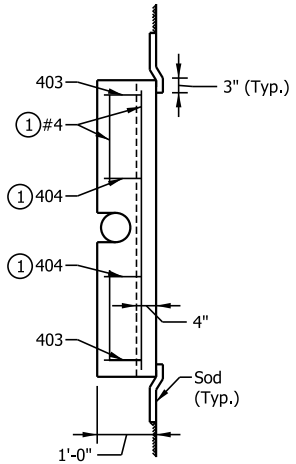

SECTION C-C

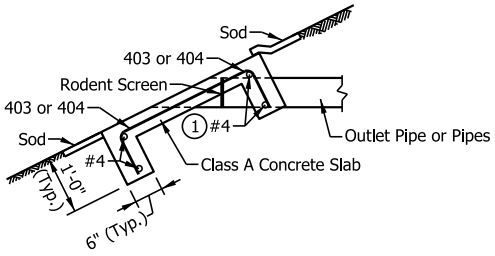

TYPICAL SECTION

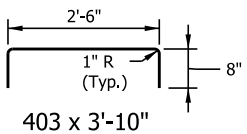

403 x 3'-10"

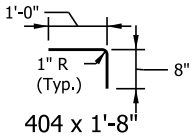

404 x 1'-8"

INDIANA DEPARTMENT OF TRANSPORTATION

OUTLET PROTECTOR, TYPE 3

SEPTEMBER 2017

STANDARD DRAWING NO. E 718-UNDR-06

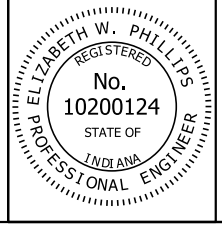

/s/ Elizabeth W. Phillips 08/26/16
DESIGN STANDARDS ENGINEER DATE

/s/ Mark A. Miller 09/19/16
CHIEF ENGINEER DATE

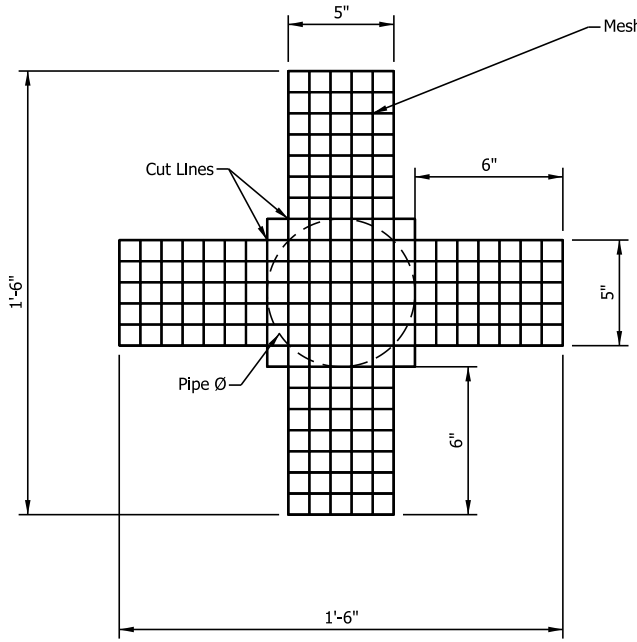

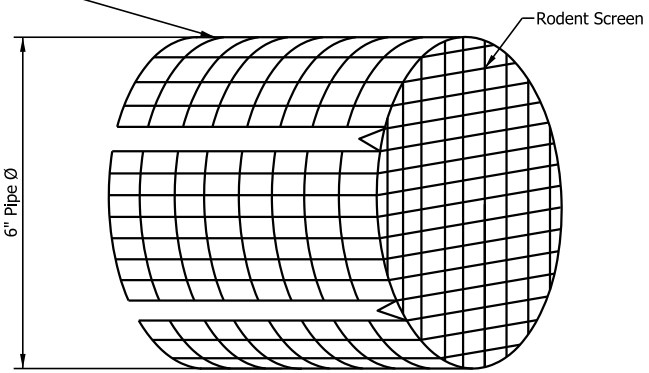

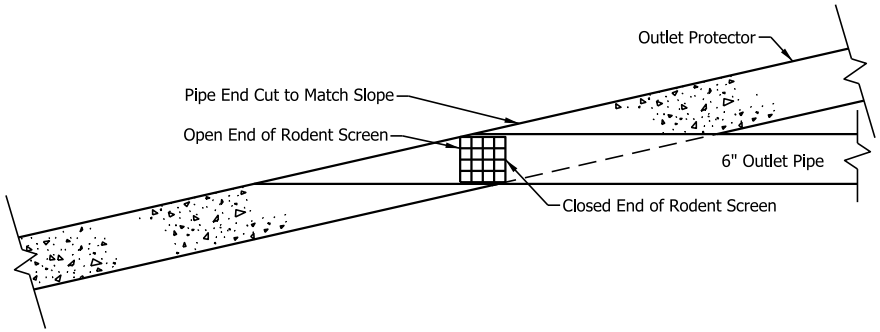

INDIANA DEPARTMENT OF TRANSPORTATION

OUTLET PROTECTOR
RODENT SCREEN

SEPTEMBER 2017

STANDARD DRAWING NO. E 718-UNDR-07

ELIZABETH W. PHILLIPS
REGISTERED
No. 10200124
STATE OF INDIANA
PROFESSIONAL ENGINEER

/s/ Elizabeth W. Phillips 08/26/16
DESIGN STANDARDS ENGINEER DATE

/s/ Mark A. Miller 09/19/16
CHIEF ENGINEER DATE

EXTRA–QUALITY

COVER (ft.)	3		4		5		6		7		8		9		10		11		12	
SIZE	CLAY	CONC.	CLAY	CONC.	CLAY	CONC.	CLAY	CONC.	CLAY	CONC.	CLAY	CONC.	CLAY	CONC.	CLAY	CONC.	CLAY	CONC.	CLAY	CONC.
6"													X	X	X	X	X	X	X	X
8"									X	X	X	X	X	X						
10"							X	X	X	X	X	X								
12"					X	X	X	X												
15"		X	X	X	X	X														
18"	X	X	X	X	X	X														
21"	X	X	X	X	X	X		X												
24"	X	X	X	X	X	X		X												
27"	X		X		X															
30"	X		X		X		X													

EXTRA–DUTY EXTRA–QUALITY

COVER (ft.)	5	6	7	8	9	10	11	12	13	14	15	16	17	18	19	20
SIZE	CLAY	CONC.	CLAY	CONC.	CLAY	CONC.	CLAY	CONC.	CLAY	CONC.	CLAY	CONC.	CLAY	CONC.	CLAY	CONC.
6"					X	X	X	X	X	X	X	X	X	X	X	X
8"			X	X	X	X	X	X	X	X	X	X	X	X	X	X
10"		X	X	X	X	X	X	X	X	X	X	X	X	X	X	X
12"	X	X	X	X	X	X	X	X	X	X	X	X	X			
15"	X	X	X	X	X	X	X	X	X	X	X	X				
18"	X	X	X	X	X	X	X	X	X	X	X	X	X	X		
21"	X	X	X	X	X	X	X	X	X							
24"	X	X	X	X	X	X	X	X	X	X	X	X	X	X		
27"	X	X	X	X	X	X	X	X								
30"	X	X	X	X	X	X	X	X	X	X	X					

SPECIAL–QUALITY

COVER (ft.)	UP TO 5	UP TO 6	UP TO 7	UP TO 8	UP TO 9	UP TO 15
SIZE	CONC.	CONC.	CONC.	CONC.	CONC.	CONC.
6"	X	X	X	X	X	X
8"	X	X	X	X	X	
10"	X	X	X	X	X	
12"	X	X				
15"	X					
18"	X					
21"	X	X				
24"	X	X				

INDIANA DEPARTMENT OF TRANSPORTATION

DRAINTILE CLASSES

JANUARY 1998

STANDARD DRAWING NO. **E 719–DTCL–01**

ANTHONY L. UREMOVICH REGISTERED No. 18095 STATE OF INDIANA PROFESSIONAL ENGINEER

DESIGN STANDARDS ENGINEER

DETAILS PLACED IN THIS FORMAT 11-15-99

/s/ Anthony L. Uremovich 11-15-99
DESIGN STANDARDS ENGINEER DATE

/s/ Firooz Zandi 11-15-99
CHIEF HIGHWAY ENGINEER DATE

ORIGINALLY APPROVED 1-02-98

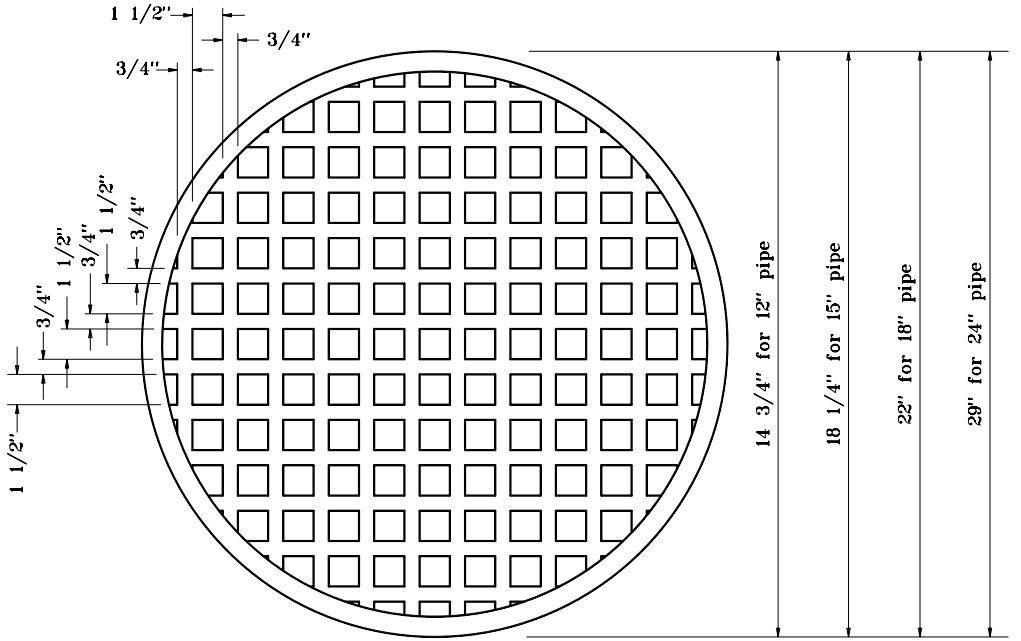

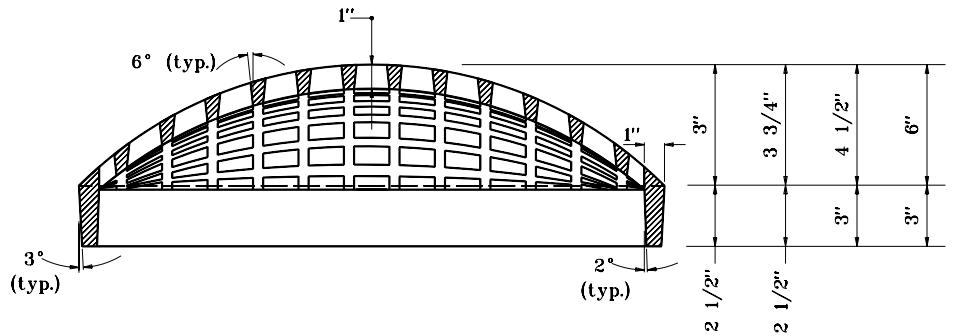

PIPE CATCH BASIN CASTING

INDIANA DEPARTMENT OF TRANSPORTATION

PIPE CATCH BASIN CASTING

APRIL 1995

STANDARD DRAWING NO. **E 720-CBCA-01**

ANTHONY L. UREMOVICH REGISTERED No. 18095 STATE OF INDIANA PROFESSIONAL ENGINEER

DESIGN STANDARDS ENGINEER

DETAILS PLACED IN THIS FORMAT	11-15-99
/s/ Anthony L. Uremovich DESIGN STANDARDS ENGINEER	11-15-99 DATE
/s/ Firooz Zandi CHIEF HIGHWAY ENGINEER	11-15-99 DATE
ORIGINALLY APPROVED	4-03-95

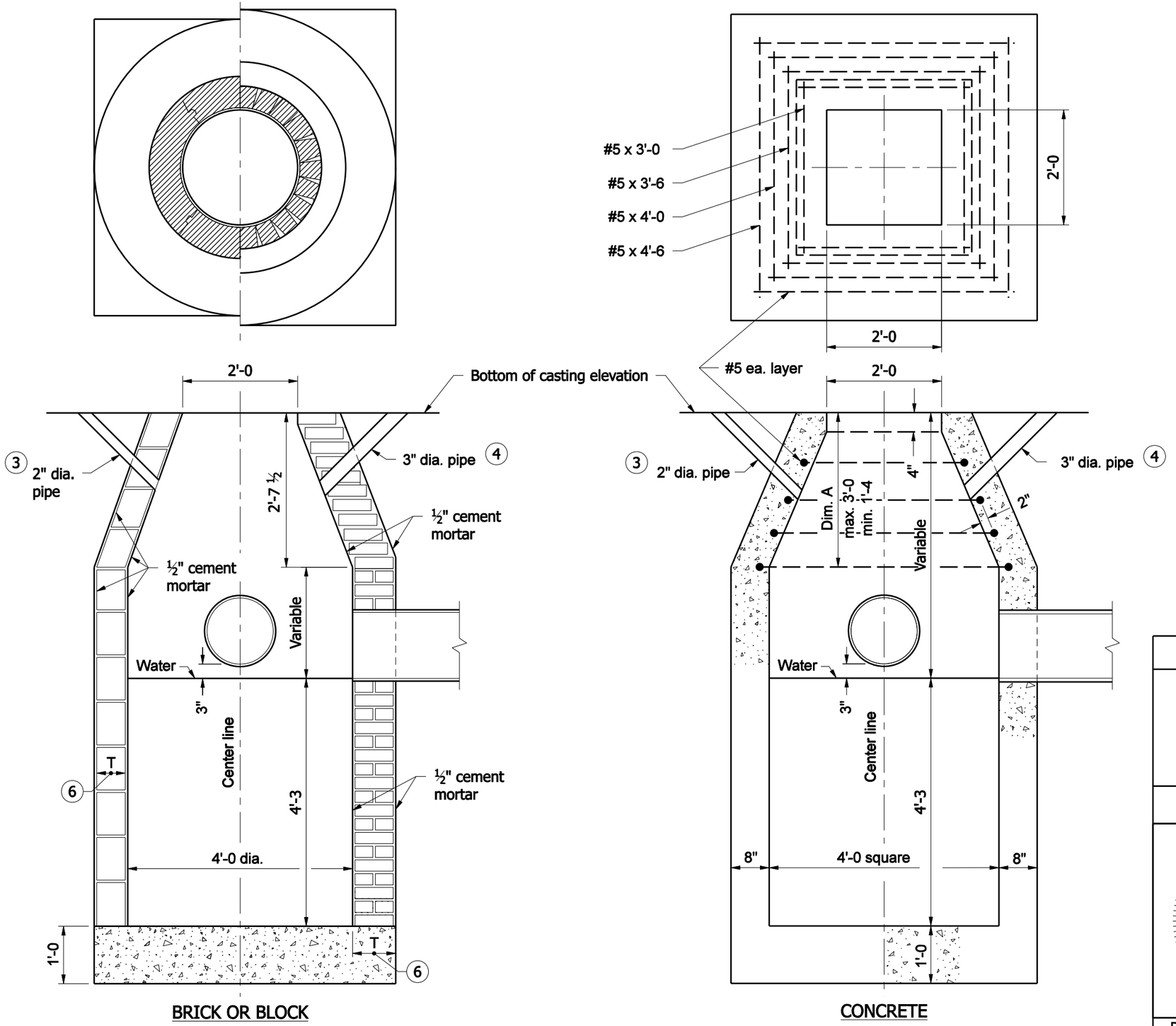

BRICK OR BLOCK

CONCRETE

GENERAL NOTES

1. Brick, block, or concrete may be used.
2. Precast catch basin type W may be substituted for catch basin type A.

(3) 2" dia. pipe drain from bottom of curb to inlet. Aggregate to be placed around inlet end of pipe.

(4) 3" dia. pipe to be kept open for drainage of subgrade or base until surface is placed.

5. Reinforcement required if Dim. A < 2'-6. Reinforcement not required if Dim. A ≥ 2'-6.

(6) T = 8" for brick structure
T = 6" for segmental block structure

INDIANA DEPARTMENT OF TRANSPORTATION

CATCH BASIN TYPE A

SEPTEMBER 2008

STANDARD DRAWING NO. E 720- CBST-01

RICHARD L. VanCLEAVE REGISTERED No. 9750 STATE OF INDIANA PROFESSIONAL ENGINEER

DESIGN STANDARDS ENGINEER

/s/ Richard L. VanCleave 09/02/08
DESIGN STANDARDS ENGINEER — DATE

/s/ Mark A. Miller 09/02/08
CHIEF HIGHWAY ENGINEER — DATE

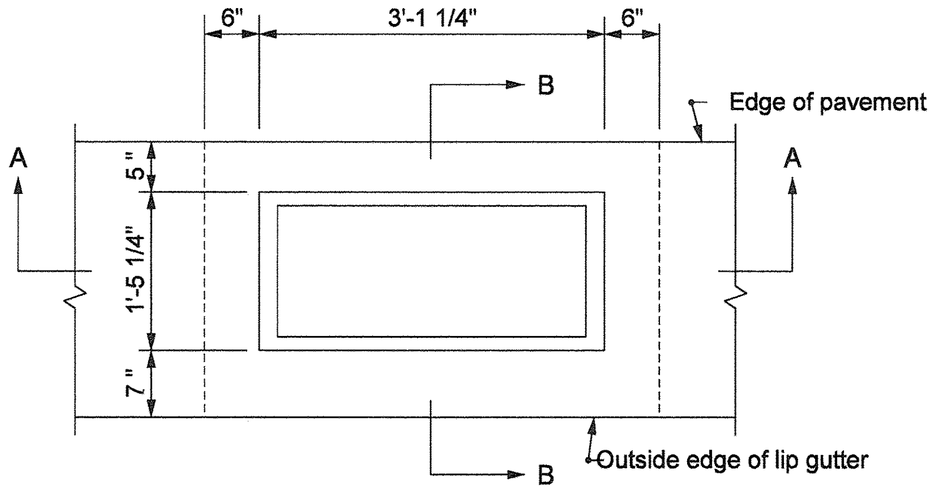

PLAN

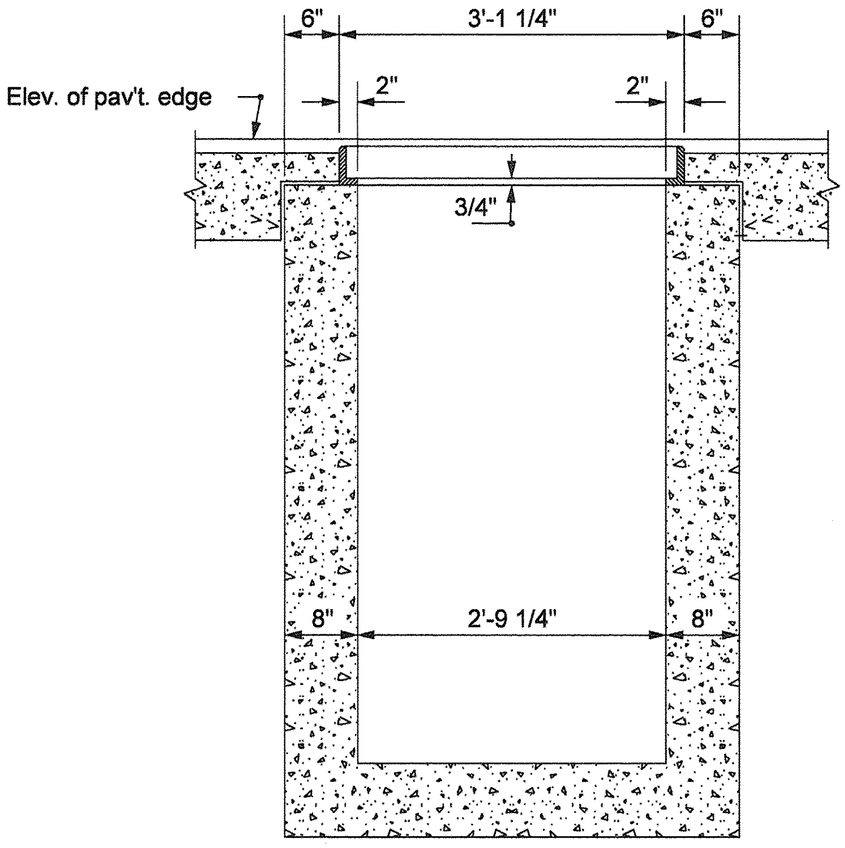

SECTION A-A

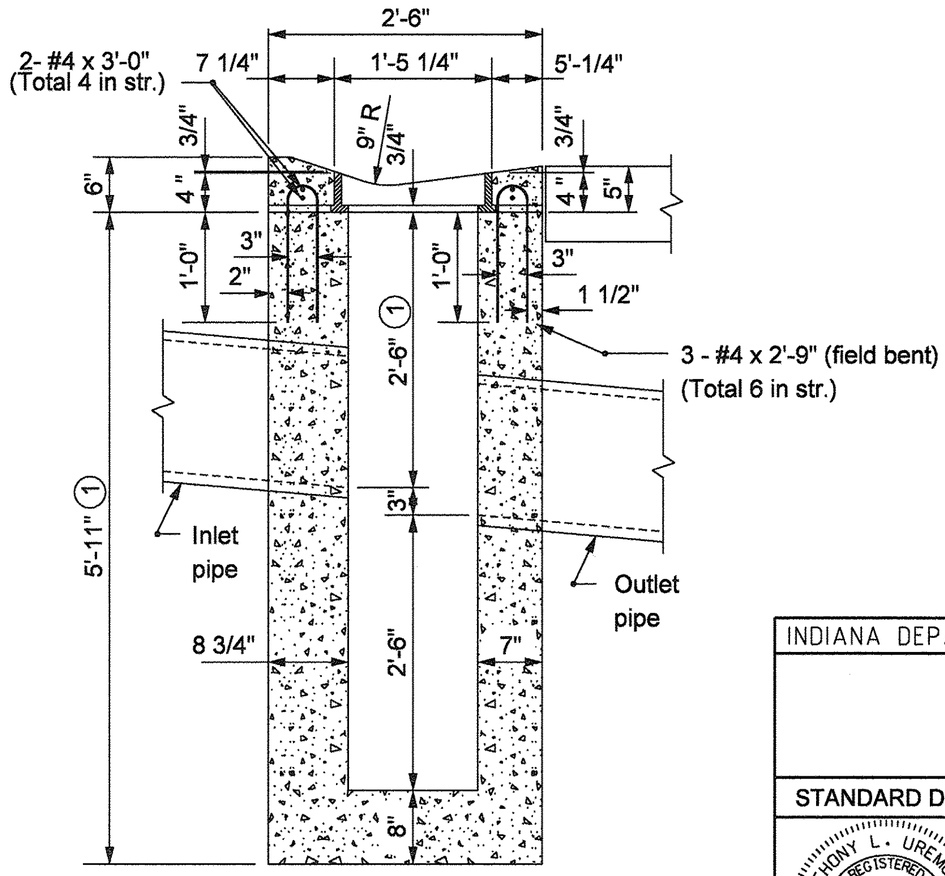

SECTION B-B

NOTES

(1) These dimensions may be increased or decreased by 1'-0", as directed.

INDIANA DEPARTMENT OF TRANSPORTATION

CATCH BASIN TYPE D

SEPTEMBER 2003

STANDARD DRAWING NO. E 720-CBST-02

ANTHONY L. UREMOVICH REGISTERED No. 18095 STATE OF INDIANA PROFESSIONAL ENGINEER

DESIGN STANDARDS ENGINEER

Anthony L. Uremovich 9-3-03
DESIGN STANDARDS ENGINEER DATE

Richard K. Armstrong 9-3-03
CHIEF HIGHWAY ENGINEER DATE

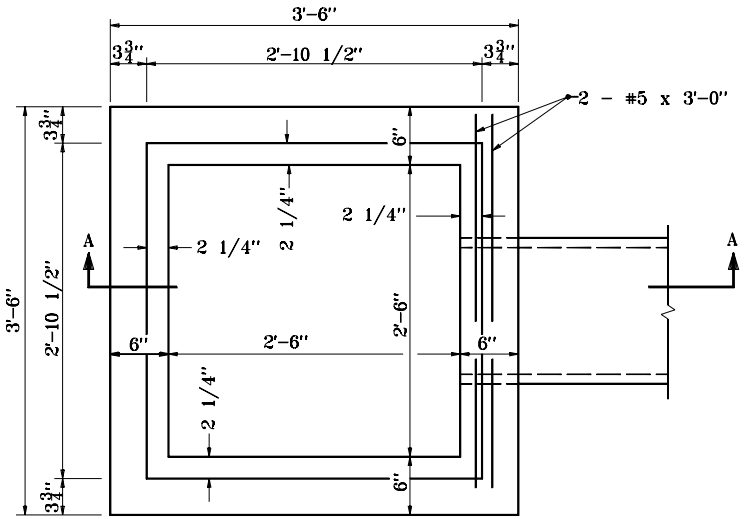

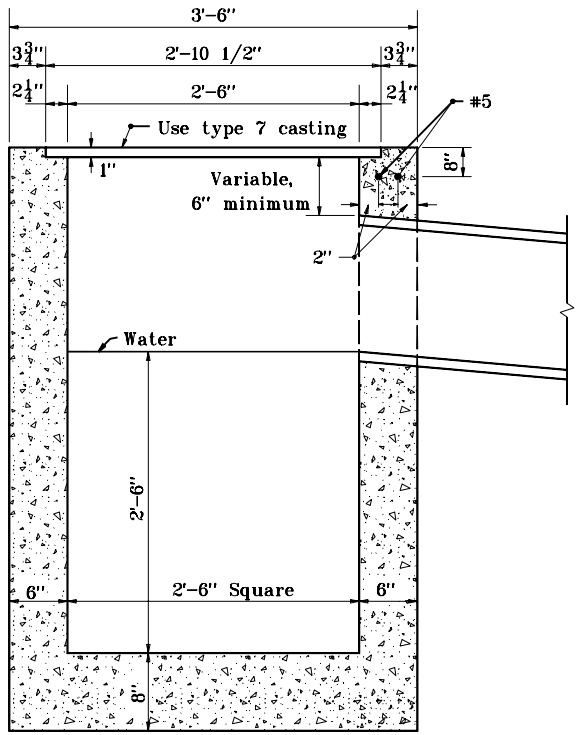

SECTION A-A

INDIANA DEPARTMENT OF TRANSPORTATION

CATCH BASIN
TYPE E

SEPTEMBER 1997

STANDARD DRAWING NO. **E 720-CBST-03**

ANTHONY L. UREMOVICH REGISTERED No. 18095 STATE OF INDIANA PROFESSIONAL ENGINEER

DESIGN STANDARDS ENGINEER

DETAILS PLACED IN THIS FORMAT	11-15-99
/s/ Anthony L. Uremovich	11-15-99
DESIGN STANDARDS ENGINEER	DATE
/s/ Firooz Zandi	11-15-99
CHIEF HIGHWAY ENGINEER	DATE
ORIGINALLY APPROVED	9-01-97

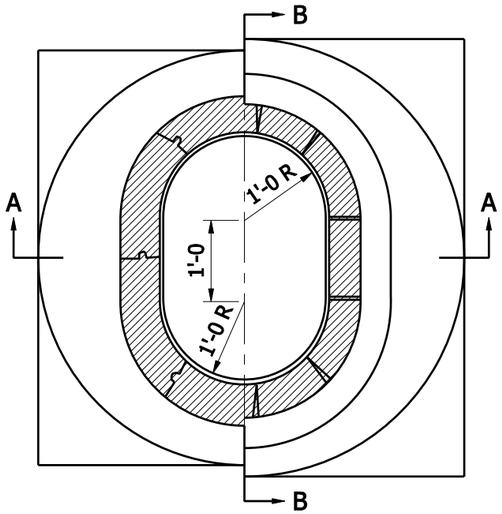

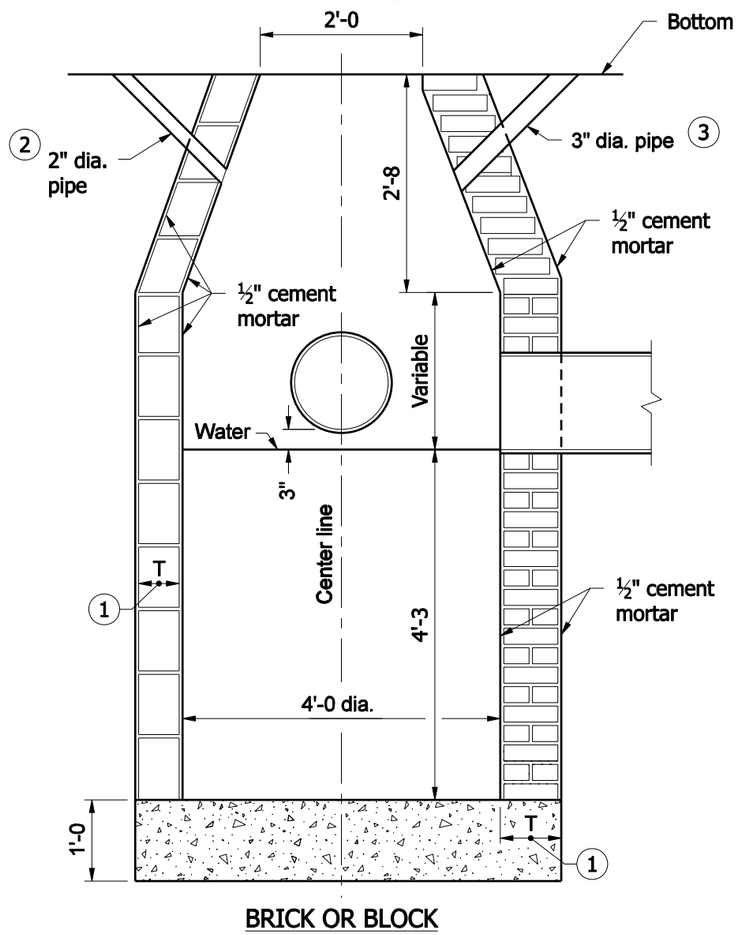

BRICK OR BLOCK

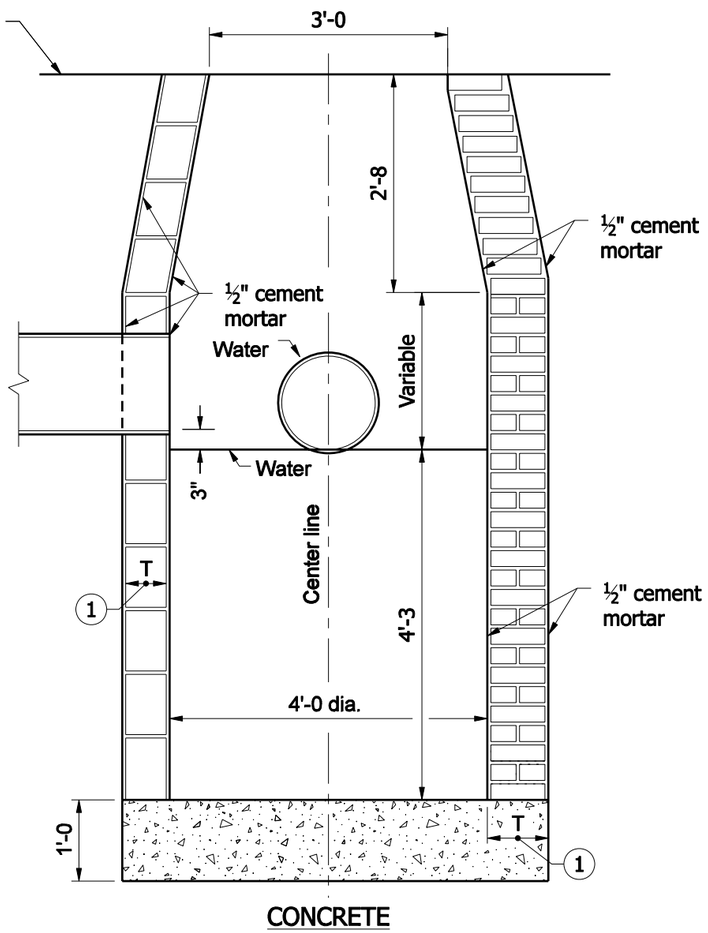

CONCRETE

GENERAL NOTES

1. T = 8" for brick structure
   T = 6" for segmental block structure
2. 2" pipe drain from bottom of curb to inlet. Aggregate to be placed around inlet end of pipe.
3. 3" min. dia. pipe to be kept open for drainage of subgrade or base until surface is placed.

INDIANA DEPARTMENT OF TRANSPORTATION

CATCH BASIN
TYPE J

SEPTEMBER 2008

STANDARD DRAWING NO. E 720- CBST-04

RICHARD L. VanCLEAVE REGISTERED No. 9750 STATE OF INDIANA PROFESSIONAL ENGINEER

DESIGN STANDARDS ENGINEER

/s/ Richard L. VanCleave 09/02/08
DESIGN STANDARDS ENGINEER — DATE

/s/ Mark A. Miller 09/02/08
CHIEF HIGHWAY ENGINEER — DATE

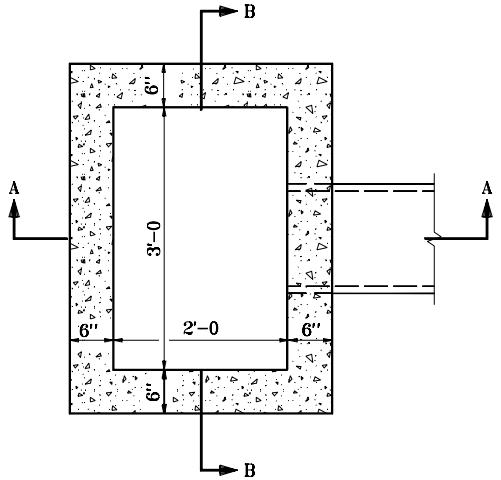

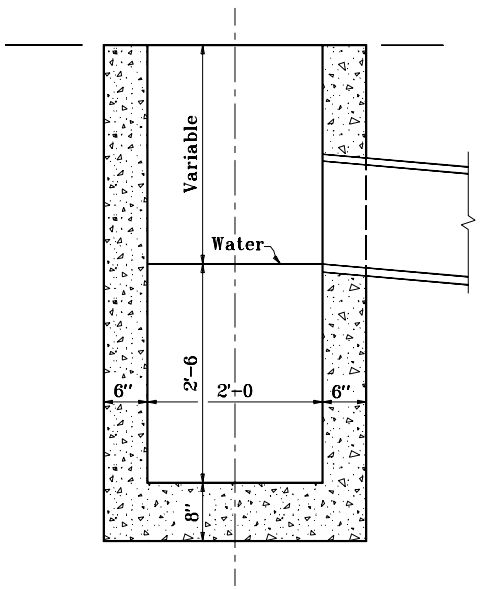

SECTION A–A

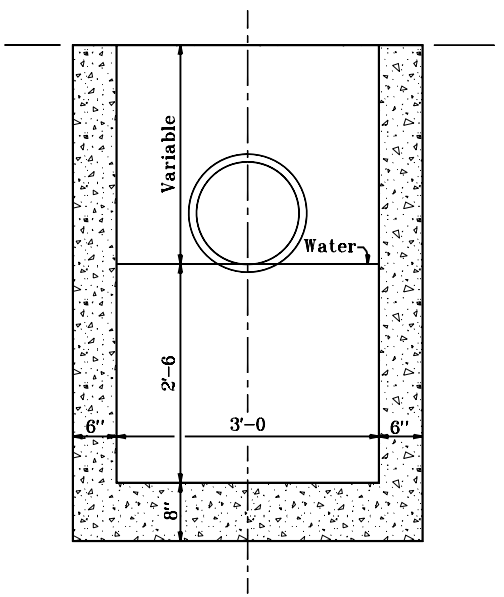

SECTION B–B

INDIANA DEPARTMENT OF TRANSPORTATION

CATCH BASIN
TYPE K

APRIL 1995

STANDARD DRAWING NO. **E 720-CBST-05**

ANTHONY L. UREMOVICH REGISTERED No. 18095 STATE OF INDIANA PROFESSIONAL ENGINEER

DESIGN STANDARDS ENGINEER

DETAILS PLACED IN THIS FORMAT 11-15-99

/s/ Anthony L. Uremovich 11-15-99
DESIGN STANDARDS ENGINEER DATE

/s/ Firooz Zandi 11-15-99
CHIEF HIGHWAY ENGINEER DATE

ORIGINALLY APPROVED 4-03-95

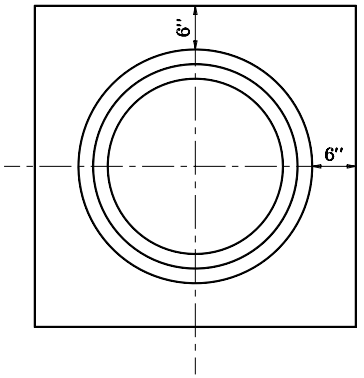

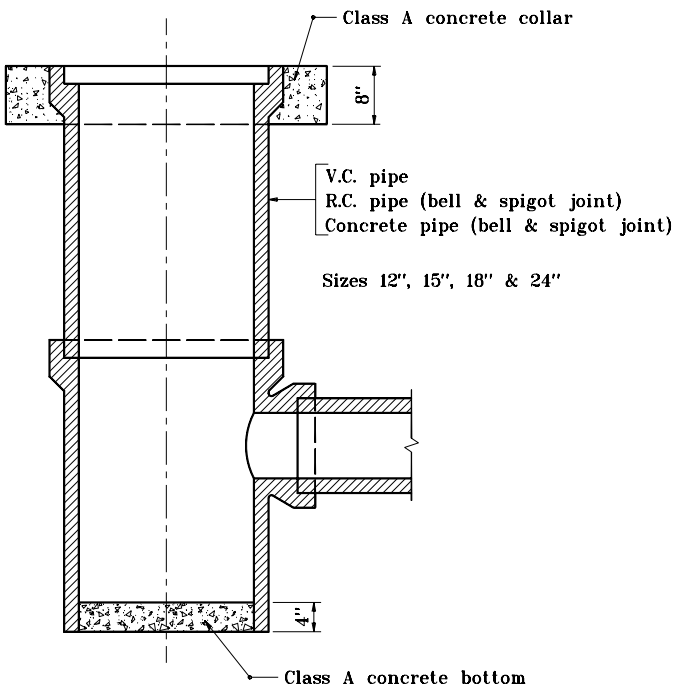

INDIANA DEPARTMENT OF TRANSPORTATION

CATCH BASIN PIPE

APRIL 1995

STANDARD DRAWING NO. **E 720-CBST-06**

ANTHONY L. UREMOVICH REGISTERED No. 18095 STATE OF INDIANA PROFESSIONAL ENGINEER

DESIGN STANDARDS ENGINEER

DETAILS PLACED IN THIS FORMAT 11-15-99

/s/ Anthony L. Uremovich 11-15-99
DESIGN STANDARDS ENGINEER DATE

/s/ Firooz Zandi 11-15-99
CHIEF HIGHWAY ENGINEER DATE

ORIGINALLY APPROVED 4-03-95

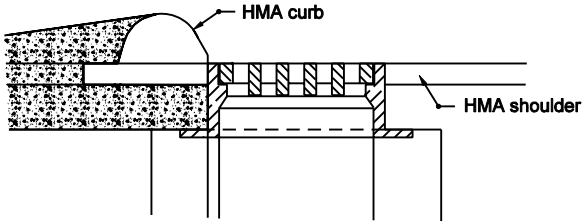

PLACEMENT DETAIL FOR CASTING

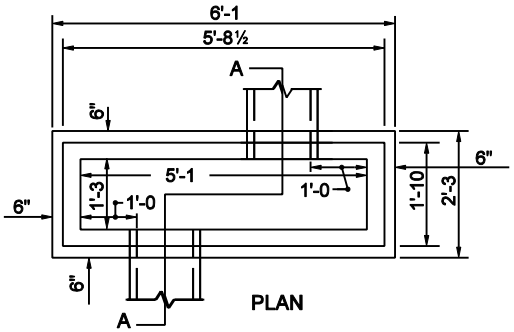

CATCH BASIN TYPE S

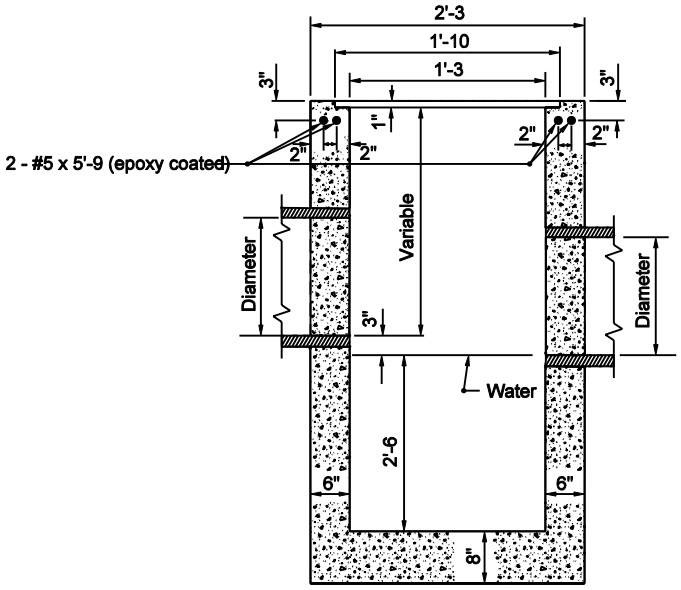

SECTION A-A

INDIANA DEPARTMENT OF TRANSPORTATION

CATCH BASIN
TYPE S

SEPTEMBER 2003

STANDARD DRAWING NO. E 720-CBST-07

RICHARD L. VanCLEAVE REGISTERED No. 9750 STATE OF INDIANA PROFESSIONAL ENGINEER

DESIGN STANDARDS ENGINEER

/s/ Richard L. VanCleave 9-02-03
DESIGN STANDARDS ENGINEER DATE

/s/ Richard K. Smutzer 9-02-03
CHIEF HIGHWAY ENGINEER DATE

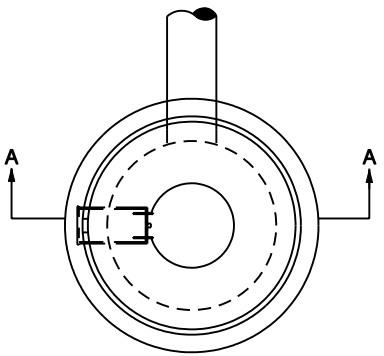

NOTES:

1. Concentric concrete section will not be permited on any manhole that will be under the jurisdiction of the Indianapolis Sanitary District
2. The contractor will be premitted to substitute precast catch basin type "W" for catch basin type "A".

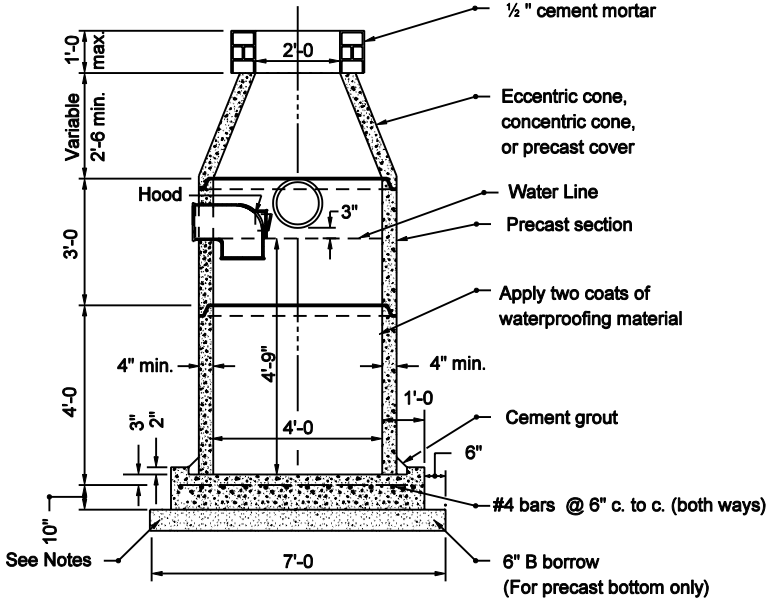

SECTION A-A

INDIANA DEPARTMENT OF TRANSPORTATION

CATCH BASIN
TYPE W

SEPTEMBER 2003

STANDARD DRAWING NO. E 720-CBST-08

RICHARD L. VanCLEAVE REGISTERED No. 9750 STATE OF INDIANA PROFESSIONAL ENGINEER

DESIGN STANDARDS ENGINEER

/s/ Richard L. VanCleave 9-02-03
DESIGN STANDARDS ENGINEER DATE

/s/ Richard K. Smutzer 9-02-03
CHIEF HIGHWAY ENGINEER DATE

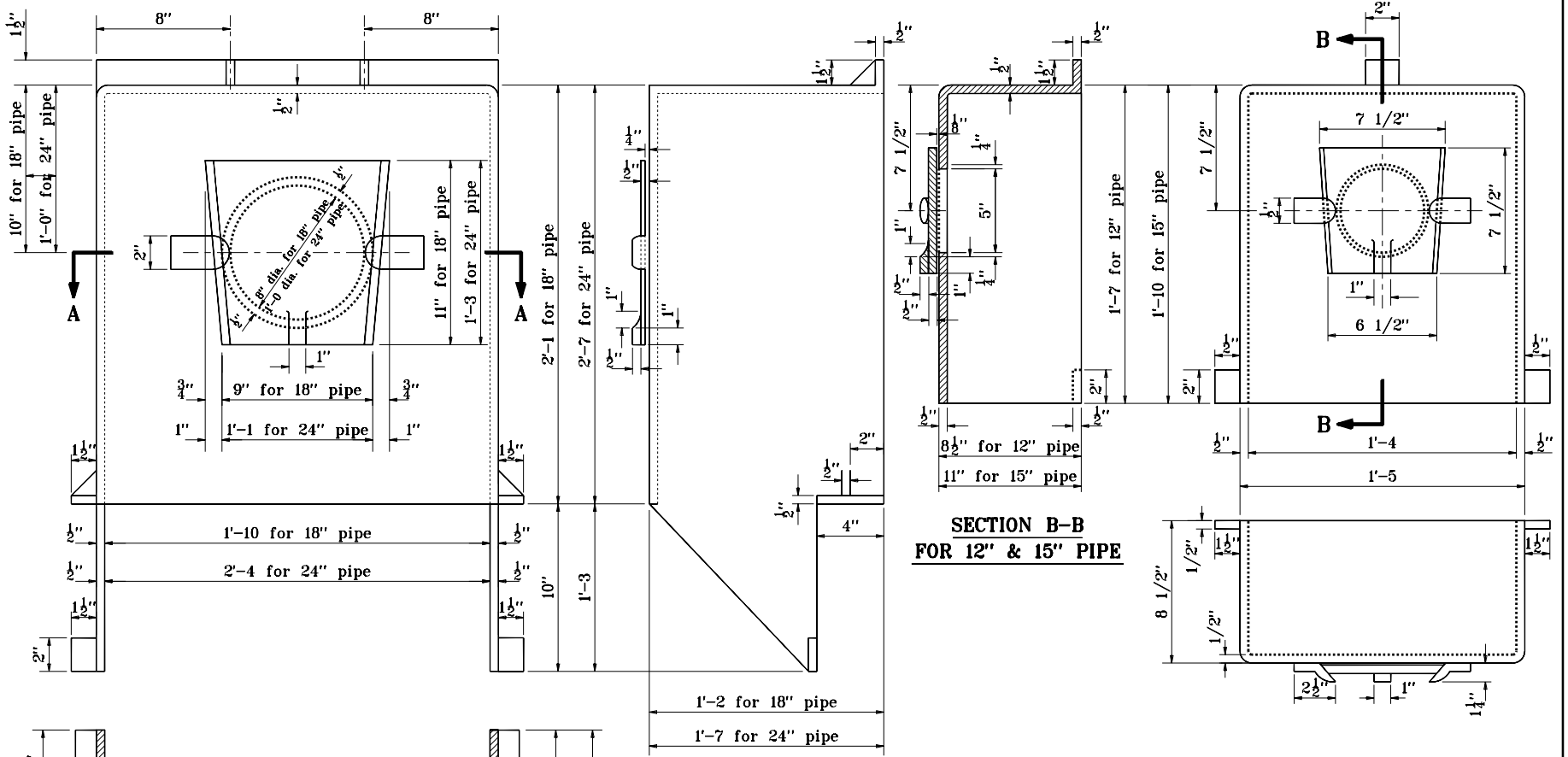

SECTION A–A
FOR 18" & 24" PIPE

SECTION B–B
FOR 12" & 15" PIPE

GENERAL NOTES

1. Hoods may be cast in one piece or may be built up of electrically welded 1/2" steel plates. All hoods shall be gas tight. Steel hoods shall be painted with waterproofing asphalt.

2. Hoods shall be omitted on earth ditch type catch basin unless otherwise specified.

INDIANA DEPARTMENT OF TRANSPORTATION

CATCH BASIN HOOD

MAY 1998

STANDARD DRAWING NO. **E 720–CBST–09**

ANTHONY L. UREMOVICH REGISTERED No. 18095 STATE OF INDIANA PROFESSIONAL ENGINEER

DESIGN STANDARDS ENGINEER

DETAILS PLACED IN THIS FORMAT 11-15-99

/s/ Anthony L. Uremovich 11-15-99
DESIGN STANDARDS ENGINEER DATE

/s/ Firooz Zandi 11-15-99
CHIEF HIGHWAY ENGINEER DATE

ORIGINALLY APPROVED 5-01-98

Str.	Type	Casting Types												
		2	3	4	5	6	7	8	10	12	12A	13	14	15
Catch Basins	A	X	X					X						
	D					X								
	E						X							
	J								X					
	K								X					
	S												X	
	W①	X	X					X						
Inlets	A	X	X					X						
	B													X
	C													X
	D					X								
	E						X							
	F						X							
	G						X							
	H, HA				X									
	J								X					
	M								X					
	N									X				
	P										X			
	R											X		
	S												X	
	T												X	
Manholes	A	X		X				X						
	B	X		X				X						
	C②	X		X				X						
	D	X		X				X						
	E	X		X				X						
	F	X		X				X						
	G	X		X				X						
	H	X		X				X						
	J	X		X				X						
	K	X		X				X						
	L	X		X				X						
	M	X		X				X						
	N	X		X				X						

NOTES

① May be substituted for catch basin type A.

② May be substituted for manhole type A or B.

INDIANA DEPARTMENT OF TRANSPORTATION

COMPATIBILITY OF DRAINAGE STRUCTURES AND CASTINGS

SEPTEMBER 2006

STANDARD DRAWING NO. E 720-CDSC-01

REGISTERED RICHARD L. VanCLEAVE No. 9750 STATE OF INDIANA PROFESSIONAL ENGINEER

DESIGN STANDARDS ENGINEER

/s/ Richard L. VanCleave 9-01-06
DESIGN STANDARDS ENGINEER DATE

/s/ Richard K. Smutzer 9-01-06
CHIEF HIGHWAY ENGINEER DATE

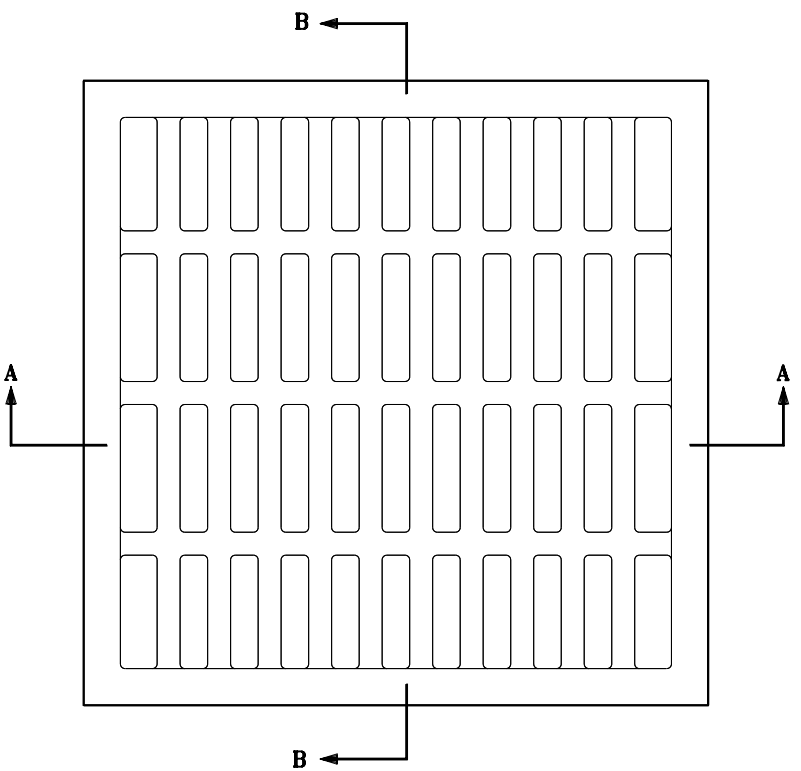

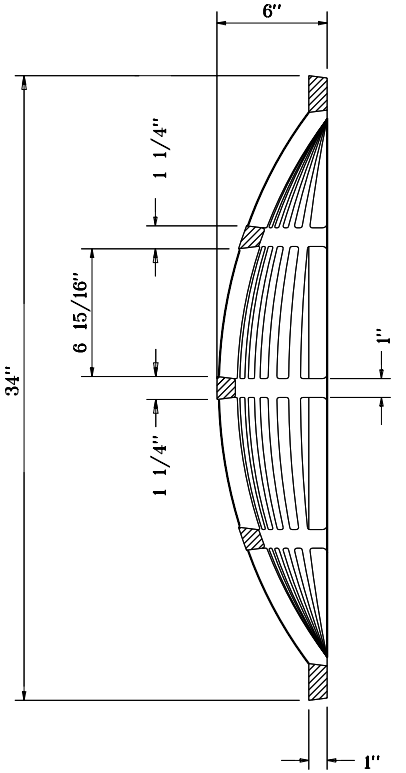

SECTION B–B

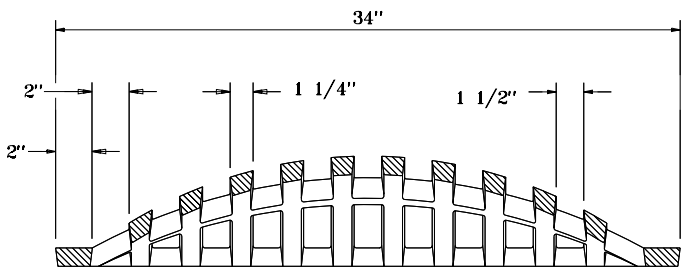

SECTION A–A

EARTH DITCH CASTING TYPE 7

INDIANA DEPARTMENT OF TRANSPORTATION

EARTH DITCH CASTING TYPE 7

SEPTEMBER 1998

STANDARD DRAWING NO. E 720-EDCA-01

ANTHONY L. UREMOVICH REGISTERED No. 18095 STATE OF INDIANA PROFESSIONAL ENGINEER

DESIGN STANDARDS ENGINEER

DETAILS PLACED IN THIS FORMAT 11-15-99

/s/ Anthony L. Uremovich 11-15-99
DESIGN STANDARDS ENGINEER DATE

/s/ Firooz Zandi 11-15-99
CHIEF HIGHWAY ENGINEER DATE

ORIGINALLY APPROVED 9-01-98

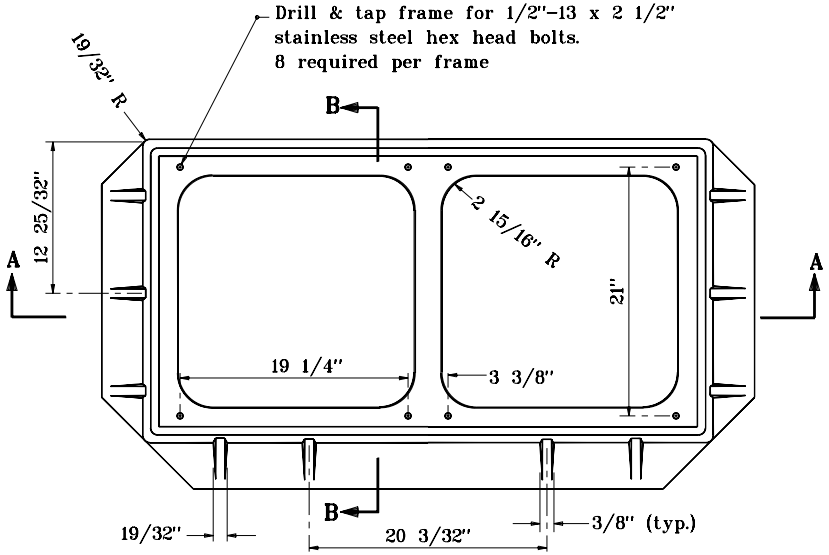

PLAN

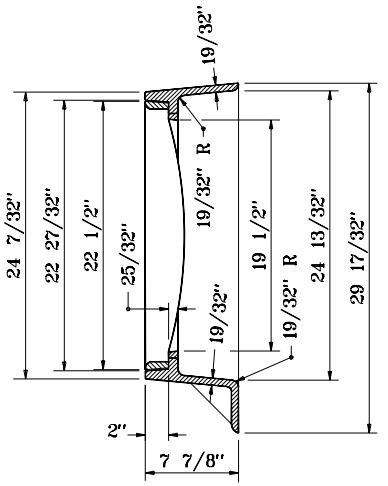

SECTION B-B

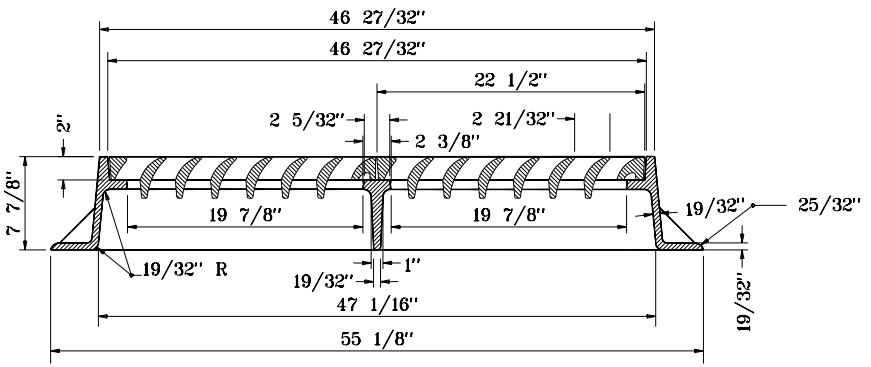

SECTION A-A

FRAME
CASTING TYPE 5

INDIANA DEPARTMENT OF TRANSPORTATION

CASTING TYPE 5
FRAME

SEPTEMBER 2001

STANDARD DRAWING NO. **E 720-ICCA-01**

RICHARD L. VanCLEAVE REGISTERED No. 9750 STATE OF INDIANA PROFESSIONAL ENGINEER

DESIGN STANDARDS ENGINEER

/s/ Anthony L. Uremovich 9-04-01
DESIGN STANDARDS ENGINEER — DATE

/s/ Firooz Zandi 9-04-01
CHIEF HIGHWAY ENGINEER — DATE

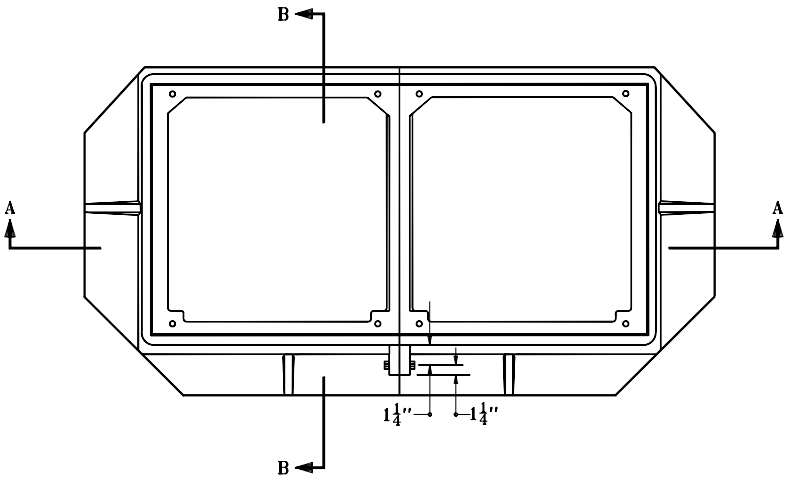

PLAN

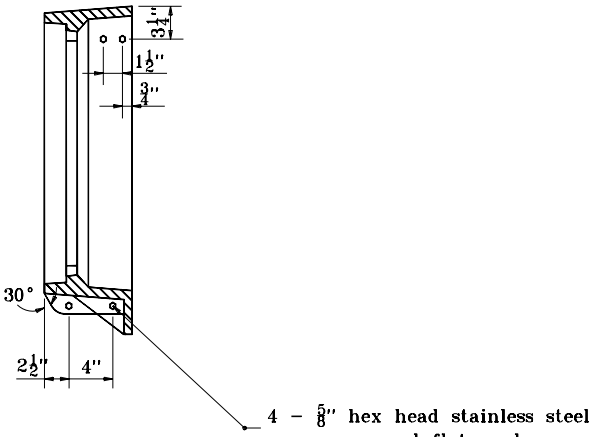

SECTION B–B

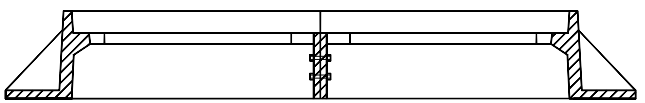

SECTION A–A

INDIANA DEPARTMENT OF TRANSPORTATION

CASTING TYPE 5
ALTERNATE BOLTED FRAME

SEPTEMBER 2001

STANDARD DRAWING NO. **E 720–ICCA–02**

RICHARD L. VanCLEAVE REGISTERED No. 9750 STATE OF INDIANA PROFESSIONAL ENGINEER

DESIGN STANDARDS ENGINEER

/s/ Anthony L. Uremovich 9–04–01
DESIGN STANDARDS ENGINEER — DATE

/s/ Firooz Zandi 9–04–01
CHIEF HIGHWAY ENGINEER — DATE

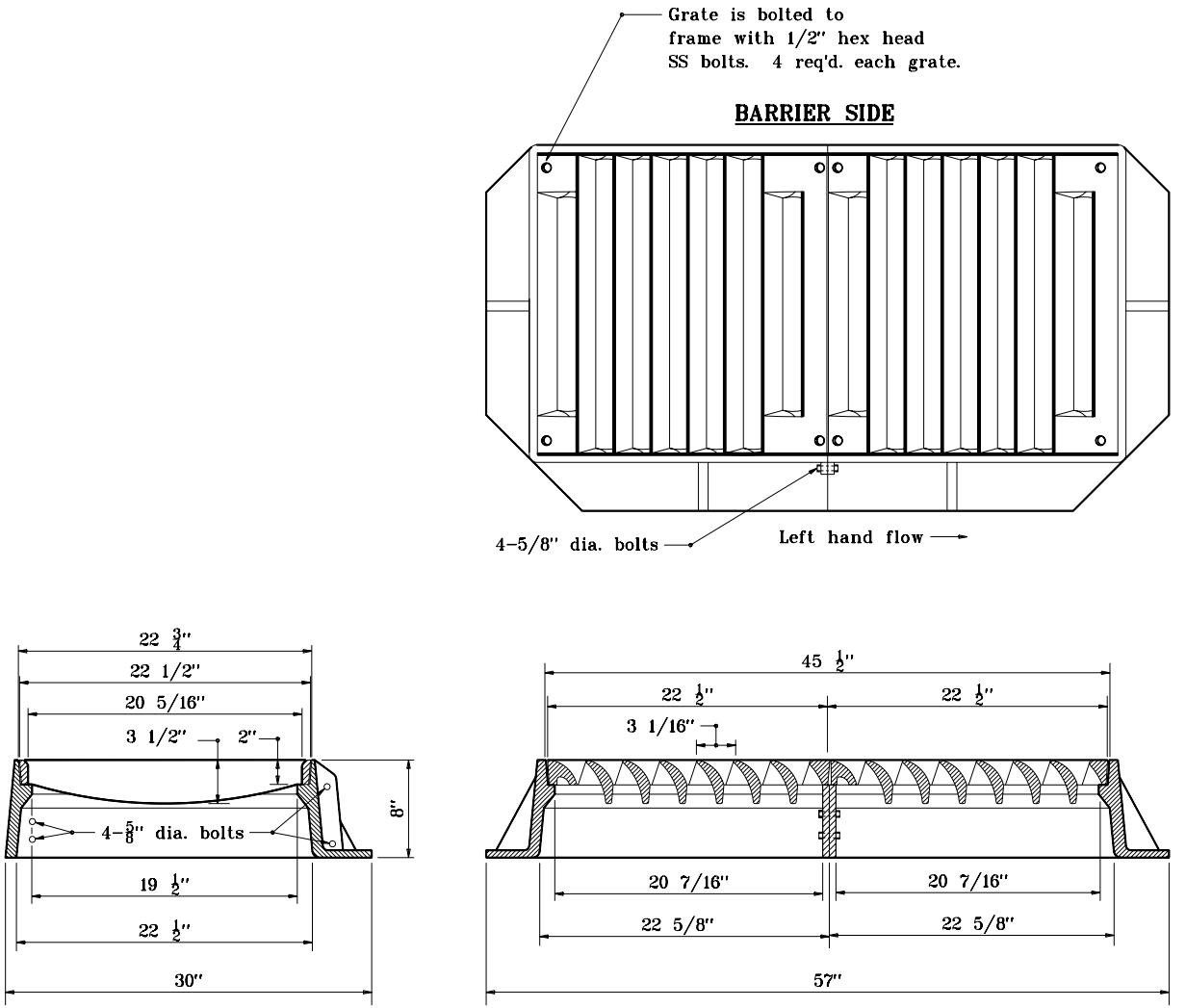

FRAME AND GRATE
CASTING TYPE 5 (ALTERNATE)

INDIANA DEPARTMENT OF TRANSPORTATION

CASTING TYPE 5 (ALTERNATE) FRAME AND GRATE

SEPTEMBER 2001

STANDARD DRAWING NO. **E 720-ICCA-03**

ANTHONY L. UREMOVICH REGISTERED No. 18095 STATE OF INDIANA PROFESSIONAL ENGINEER

DESIGN STANDARDS ENGINEER

/s/ Anthony L. Uremovich 9-04-01
DESIGN STANDARDS ENGINEER — DATE

/s/ Firooz Zandi 9-04-01
CHIEF HIGHWAY ENGINEER — DATE

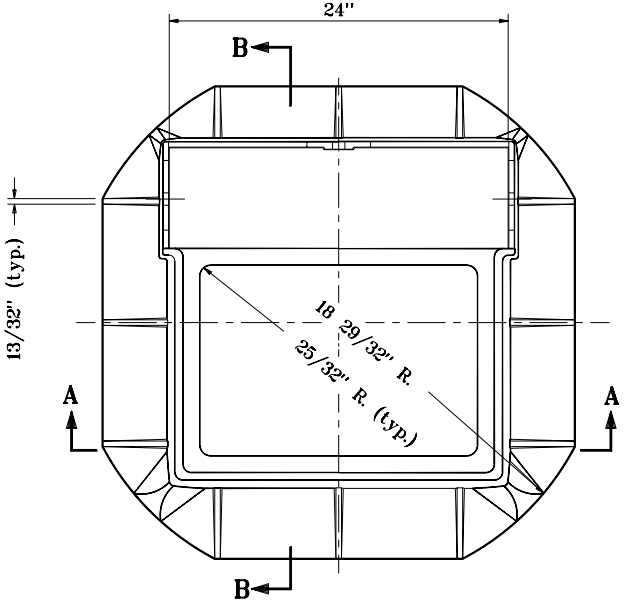

PLAN

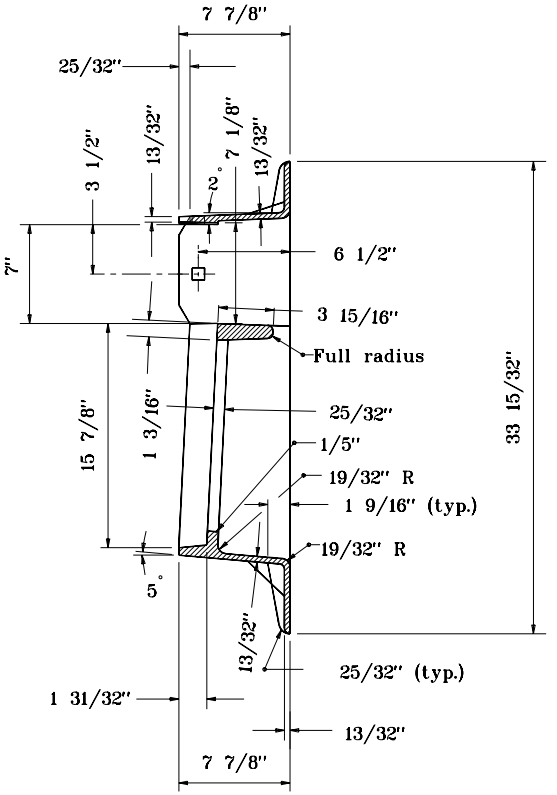

SECTION B–B

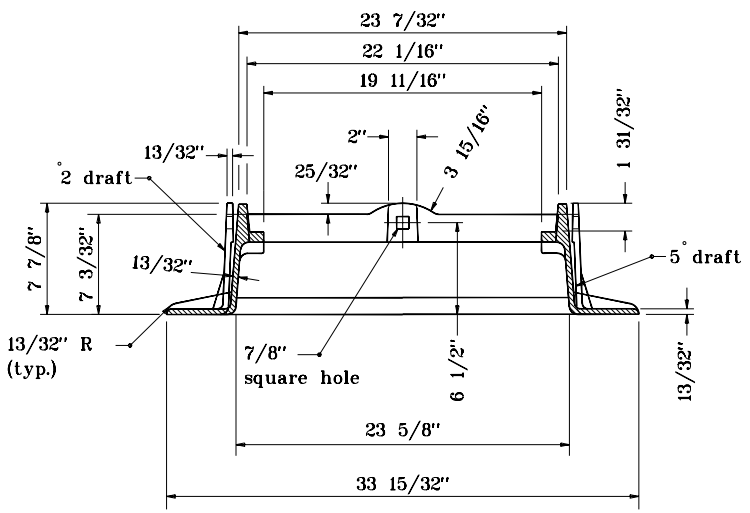

SECTION A–A

FRAME
CASTING TYPE 8

INDIANA DEPARTMENT OF TRANSPORTATION

CASTING TYPE 8
FRAME
SEPTEMBER 1998

STANDARD DRAWING NO. **E 720-ICCA-04**

ANTHONY L. UREMOVICH REGISTERED No. 18095 STATE OF INDIANA PROFESSIONAL ENGINEER

DESIGN STANDARDS ENGINEER

DETAILS PLACED IN THIS FORMAT	11-15-99
/s/ Anthony L. Uremovich	11-15-99
DESIGN STANDARDS ENGINEER	DATE
/s/ Firooz Zandi	11-15-99
CHIEF HIGHWAY ENGINEER	DATE
ORIGINALLY APPROVED	9-01-98

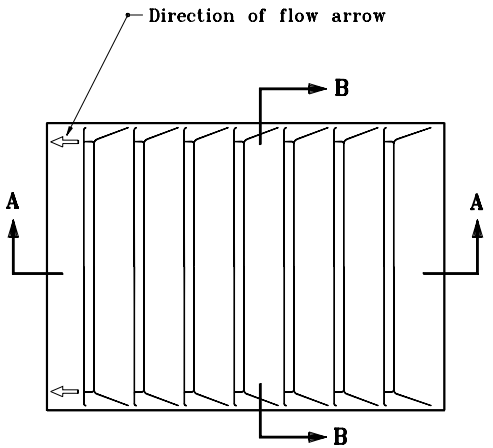

PLAN

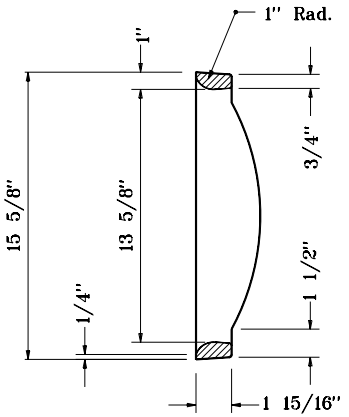

SECTION B–B

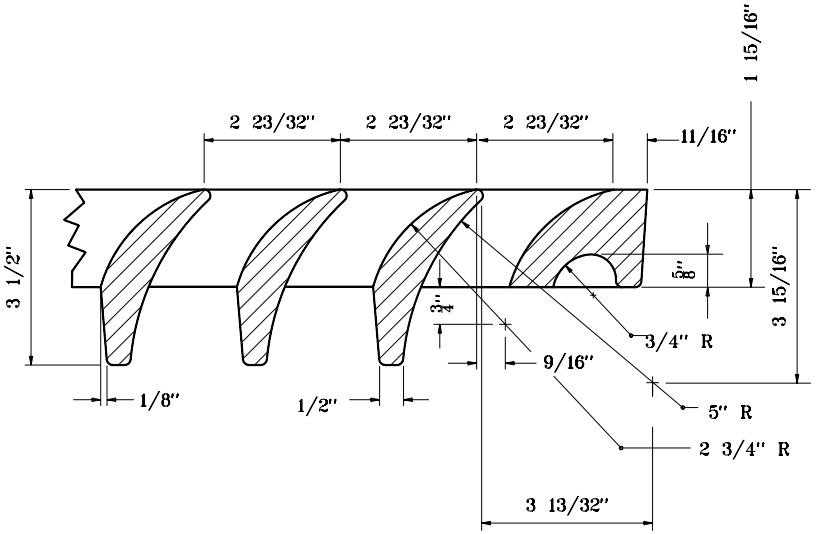

DETAIL OF SECTION A–A

GRATE

CASTING TYPE 8

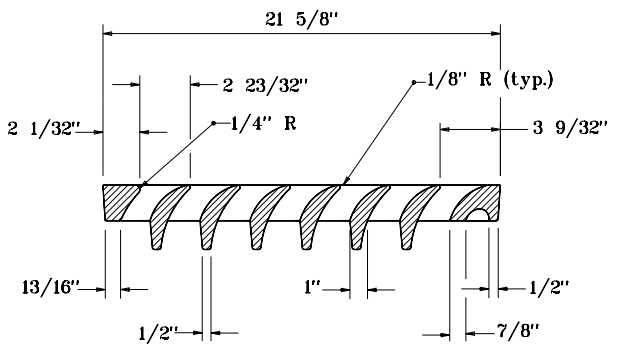

SECTION A–A

INDIANA DEPARTMENT OF TRANSPORTATION

CASTING TYPE 8

GRATE

SEPTEMBER 1998

STANDARD DRAWING NO. E 720-ICCA-05

ANTHONY L. UREMOVICH REGISTERED No. 18095 STATE OF INDIANA PROFESSIONAL ENGINEER

DESIGN STANDARDS ENGINEER

DETAILS PLACED IN THIS FORMAT	11-15-99
/s/ Anthony L. Uremovich	11-15-99
DESIGN STANDARDS ENGINEER	DATE
/s/ Firooz Zandi	11-15-99
CHIEF HIGHWAY ENGINEER	DATE
ORIGINALLY APPROVED	9-01-98

GENERAL NOTES

1. Curb box adjustable from $5\frac{1}{4}$" to $8\frac{3}{4}$".

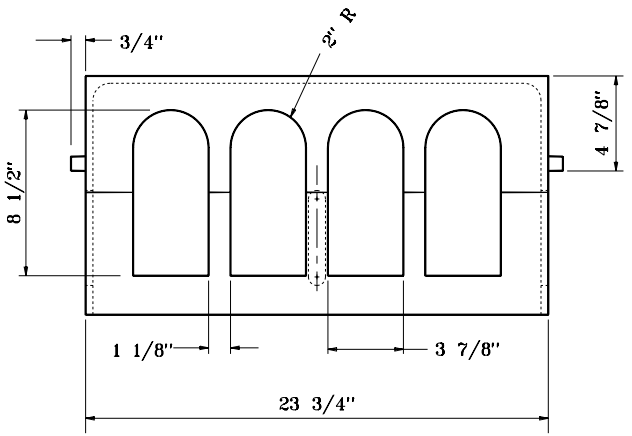

FRONT

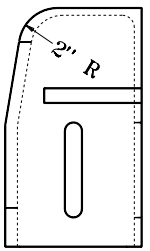

SIDE

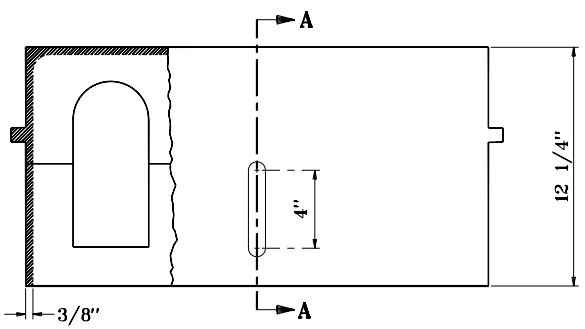

BACK

CURB BOX
CASTING TYPE 8

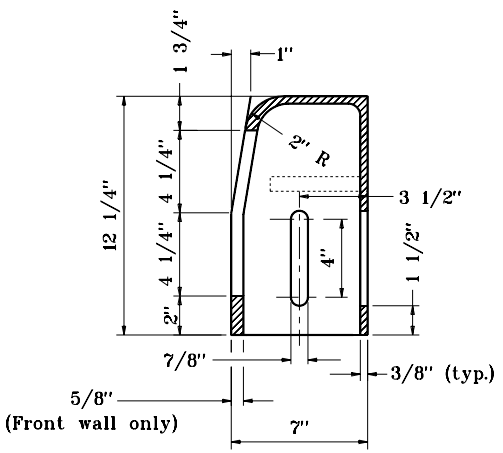

SECTION A-A

INDIANA DEPARTMENT OF TRANSPORTATION

CASTING TYPE 8
CURB BOX

SEPTEMBER 1998

STANDARD DRAWING NO. E 720-ICCA-06

ANTHONY L. UREMOVICH REGISTERED No. 18095 STATE OF INDIANA PROFESSIONAL ENGINEER

DESIGN STANDARDS ENGINEER

DETAILS PLACED IN THIS FORMAT	11-15-99
/s/ Anthony L. Uremovich DESIGN STANDARDS ENGINEER	11-15-99 DATE
/s/ Firooz Zandi CHIEF HIGHWAY ENGINEER	11-15-99 DATE
ORIGINALLY APPROVED	9-01-98

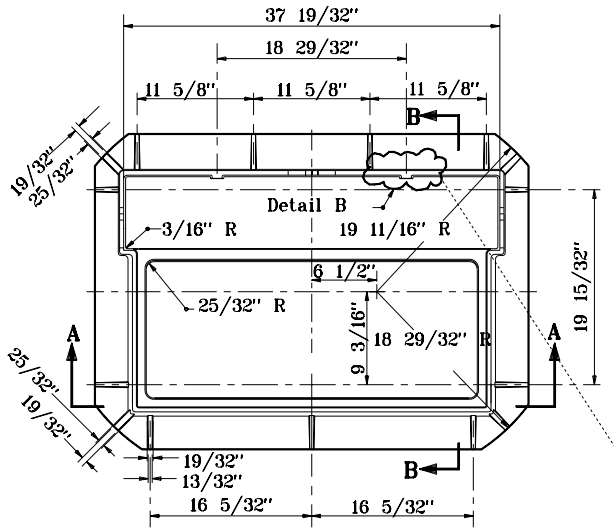

PLAN

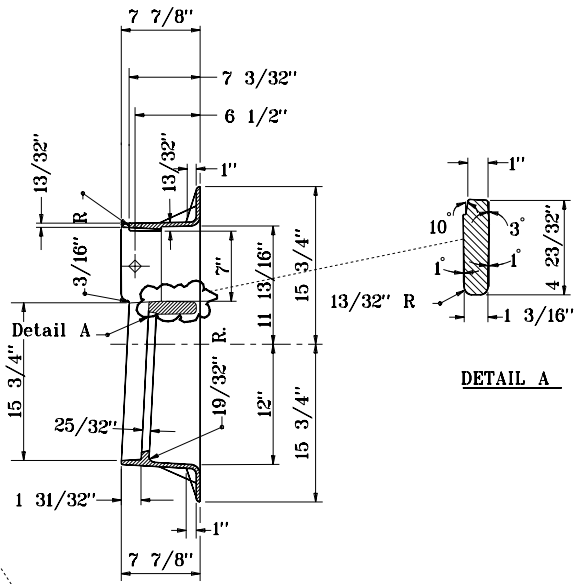

SECTION B–B

DETAIL A

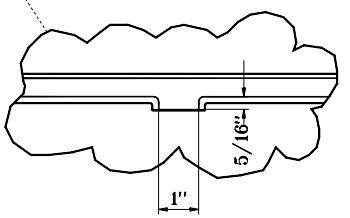

DETAIL B

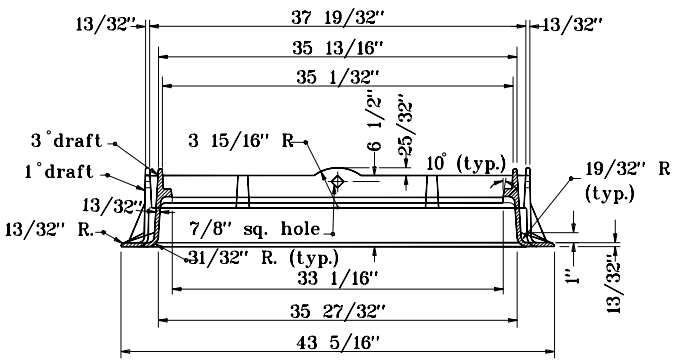

SECTION A–A

FRAME
CASTING TYPE 10

INDIANA DEPARTMENT OF TRANSPORTATION

CASTINGS TYPE 10
FRAME

SEPTEMBER 1998

STANDARD DRAWING NO. **E 720-ICCA-08**

ANTHONY L. UREMOVICH REGISTERED No. 18095 STATE OF INDIANA PROFESSIONAL ENGINEER

DESIGN STANDARDS ENGINEER

DETAILS PLACED IN THIS FORMAT	11-15-99
/s/ Anthony L. Uremovich	11-15-99
DESIGN STANDARDS ENGINEER	DATE
/s/ Firooz Zandi	11-15-99
CHIEF HIGHWAY ENGINEER	DATE
ORIGINALLY APPROVED	9-01-98

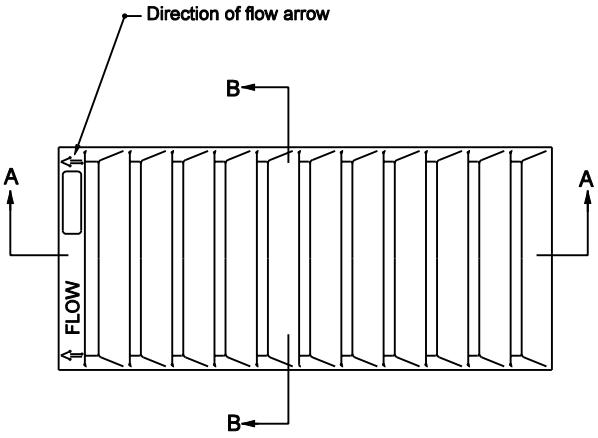

PLAN

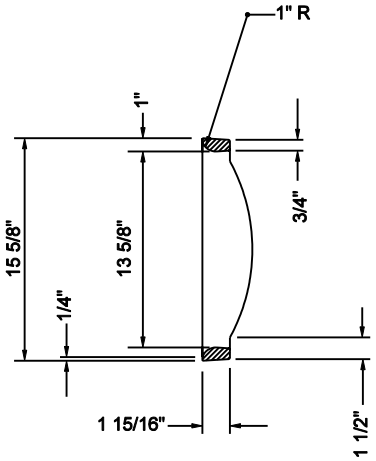

SECTION B-B

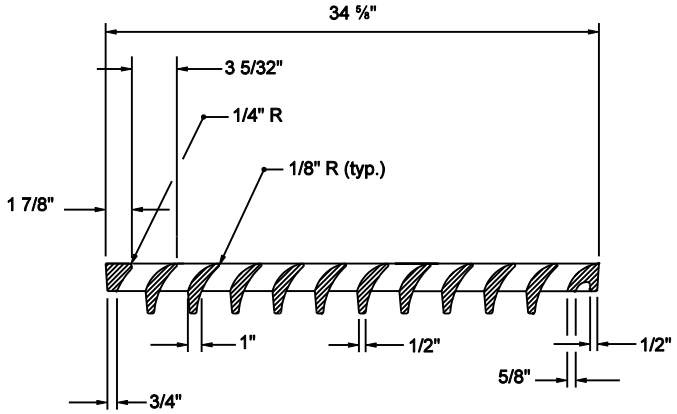

SECTION A-A

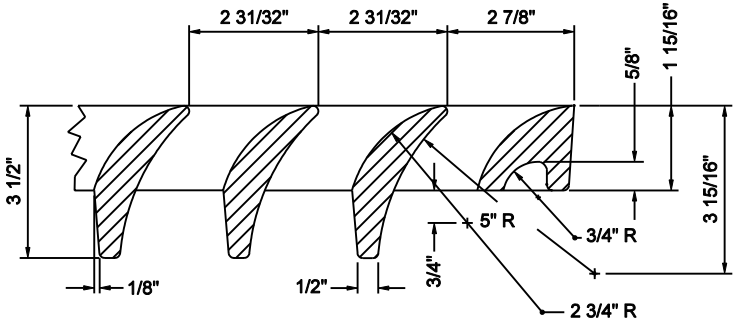

DETAIL OF SECTION A-A

GRATE
CASTING TYPE 10

INDIANA DEPARTMENT OF TRANSPORTATION

CASTING TYPE 10
GRATE

SEPTEMBER 2003

STANDARD DRAWING NO. E 720-ICCA-09

RICHARD L. VanCLEAVE REGISTERED No. 9750 STATE OF INDIANA PROFESSIONAL ENGINEER

DESIGN STANDARDS ENGINEER

/s/ Richard L. VanCleave 9-02-03
DESIGN STANDARDS ENGINEER DATE

/s/ Richard K. Smutzer 9-02-03
CHIEF HIGHWAY ENGINEER DATE

GENERAL NOTES

1. Curb box adjustable 5 1/4" t0 8 3/4".

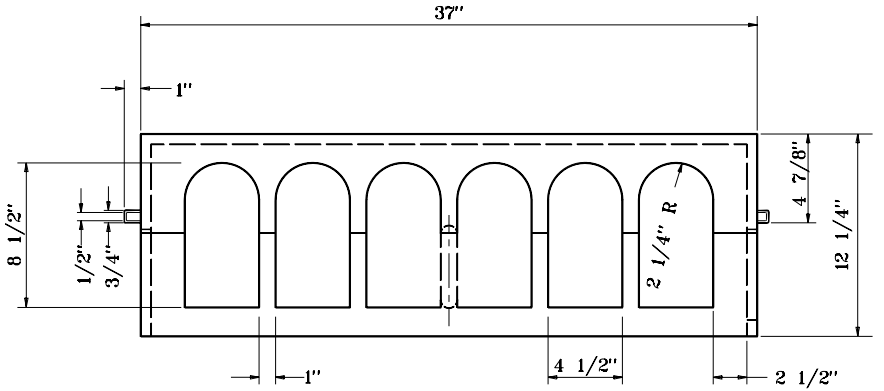

FRONT

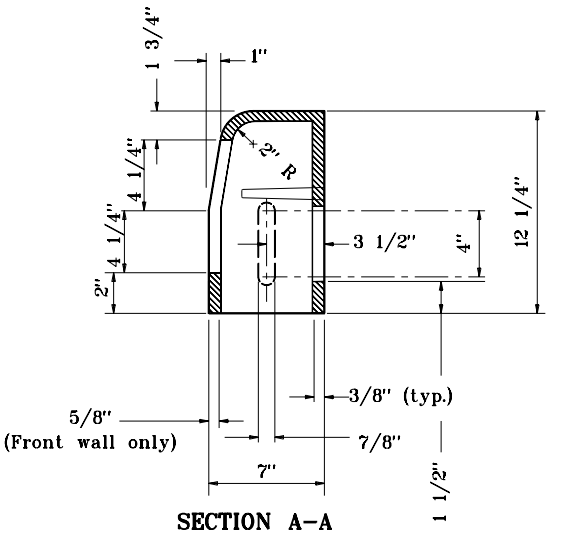

SECTION A-A

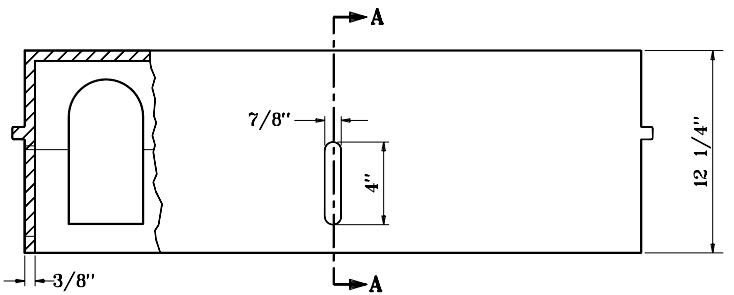

BACK

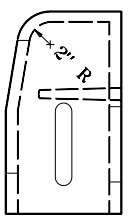

SIDE

CURB BOX
CASTING 10

INDIANA DEPARTMENT OF TRANSPORTATION

CASTING TYPE 10
CURB BOX

SEPTEMBER 1998

STANDARD DRAWING NO. E 720-ICCA-09A

ANTHONY L. UREMOVICH REGISTERED No. 18095 STATE OF INDIANA PROFESSIONAL ENGINEER

DESIGN STANDARDS ENGINEER

DETAILS PLACED IN THIS FORMAT 11-15-99

/s/ Anthony L. Uremovich 11-15-99
DESIGN STANDARDS ENGINEER DATE

/s/ Firooz Zandi 11-15-99
CHIEF HIGHWAY ENGINEER DATE

ORIGINALLY APPROVED 9-01-98

NOTES

1. Bar spacing shall be 1 ⅞" c. to c. minimum and 2 ⅜" c. to c. maximum.
2. The dimensions of the angle iron frame shall be as shown except that the A dimension may vary according to type of grating used.
3. For Section A-A, Section B-B see Standard Drawing E 720-INST-08.

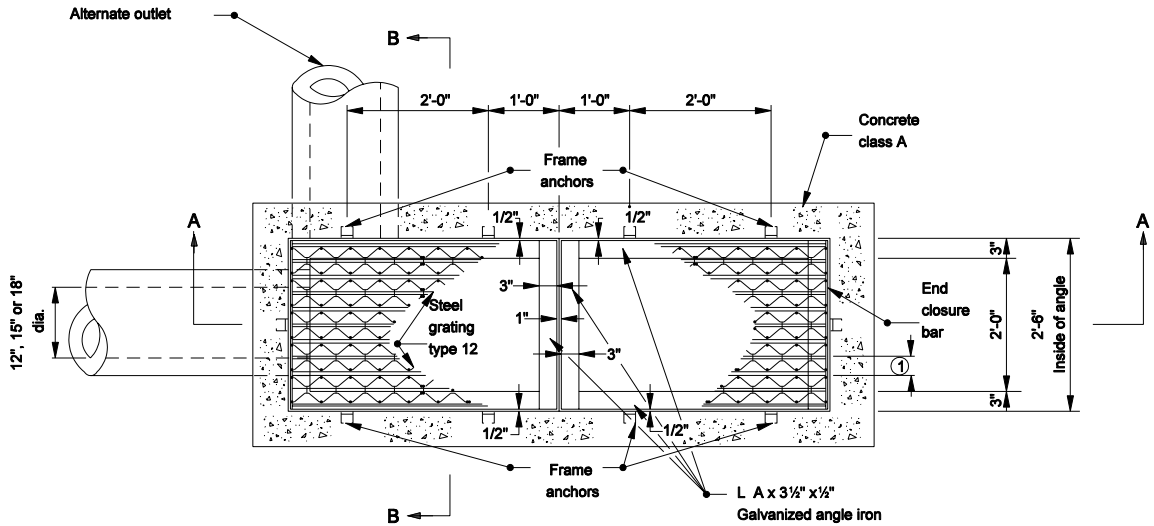

PLAN

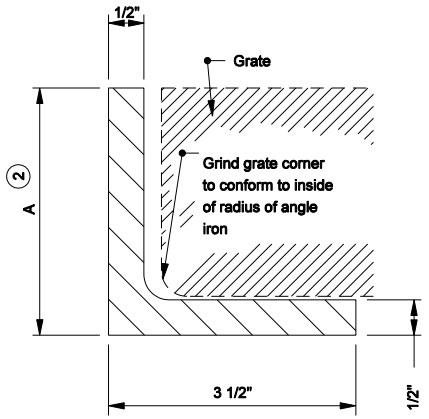

ANGLE IRON FRAME DETAIL

INDIANA DEPARTMENT OF TRANSPORTATION

STEEL GRATING TYPE 12 FRAME AND GRATE

SEPTEMBER 2005

STANDARD DRAWING NO. E 720-ICCA-10

RICHARD L. VanCLEAVE REGISTERED No. 9750 STATE OF INDIANA PROFESSIONAL ENGINEER

DESIGN STANDARDS ENGINEER

/s/ Richard L. VanCleave 9-01-05
DESIGN STANDARDS ENGINEER DATE

/s/ Richard K. Smutzer 9-01-05
CHIEF HIGHWAY ENGINEER DATE

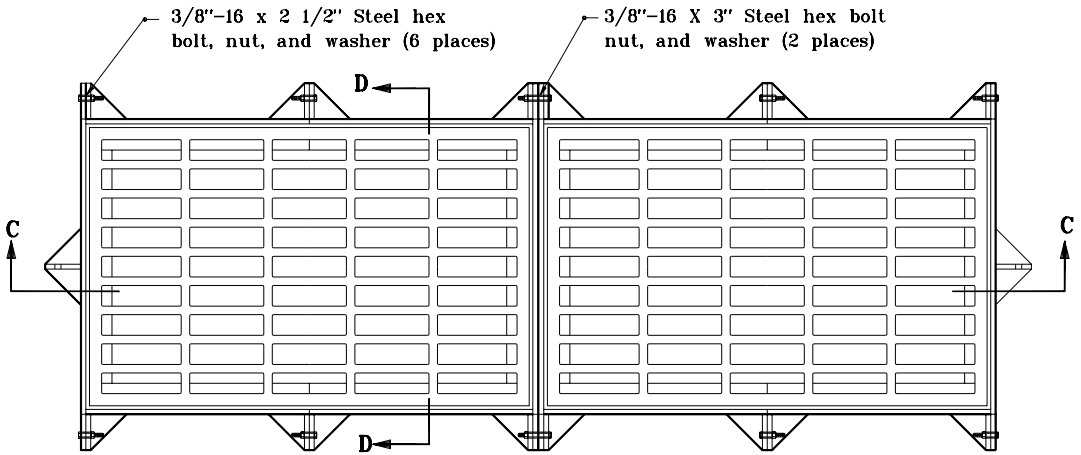

PLAN

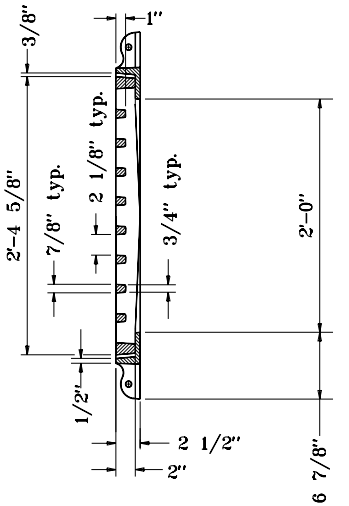

SECTION D-D

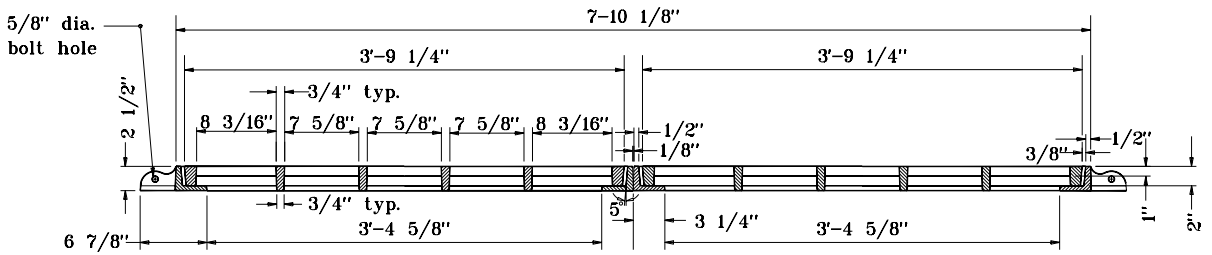

SECTION A-A

GRATE AND FRAME CASTING
ALTERNATE TYPE 12

INDIANA DEPARTMENT OF TRANSPORTATION

CASTING TYPE 12 (ALTERNATE) FRAME AND GRATE

SEPTEMBER 1998

STANDARD DRAWING NO. E 720-ICCA-11

ANTHONY L. UREMOVICH REGISTERED No. 18095 STATE OF INDIANA PROFESSIONAL ENGINEER

DESIGN STANDARDS ENGINEER

DETAILS PLACED IN THIS FORMAT 11-15-99

/s/ Anthony L. Uremovich 11-15-99
DESIGN STANDARDS ENGINEER DATE

/s/ Firooz Zandi 11-15-99
CHIEF HIGHWAY ENGINEER DATE

ORIGINALLY APPROVED 9-01-98

GENERAL NOTES

1. Spacing shall be $1\frac{7}{8}$" c. to c. min., and $2\frac{3}{8}$" c. to c. max.
2. The dimensions of the angle iron frame shall be as shown except that the A dimension may vary according to type of grating used.

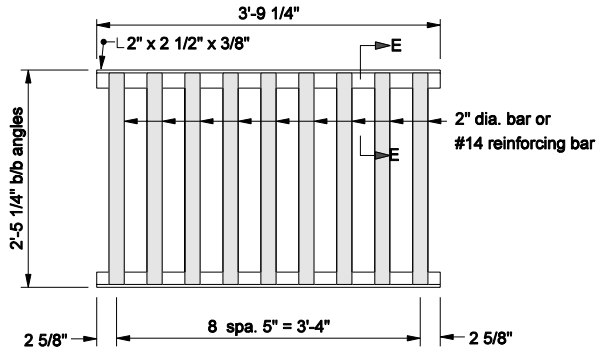

ALTERNATE STEEL GRATING
(To be used with steel frame type 12A)

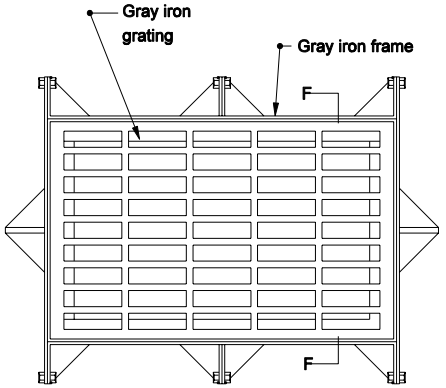

GRATE AND FRAME CASTING
ALTERNATE TYPE 12A

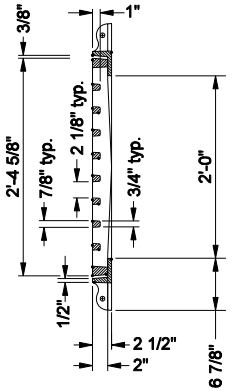

SECTION F-F

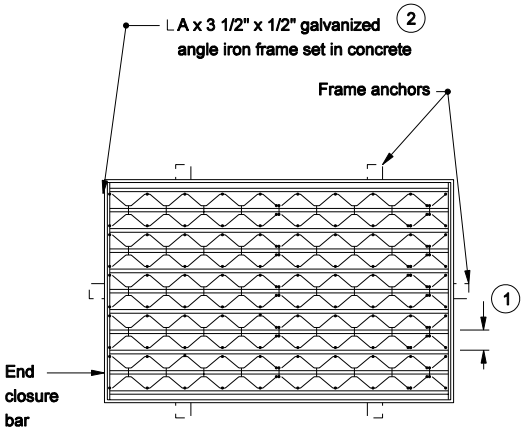

STEEL GRATING AND FRAME
TYPE 12A

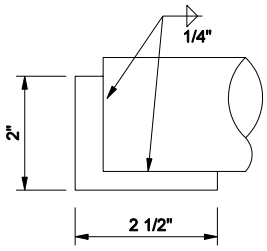

SECTION E-E

INDIANA DEPARTMENT OF TRANSPORTATION

STEEL GRATING TYPE 12A
FRAME AND GRATE

SEPTEMBER 2005

STANDARD DRAWING NO. E 720-ICCA-12

RICHARD L. VanCLEAVE REGISTERED No. 9750 STATE OF INDIANA PROFESSIONAL ENGINEER
DESIGN STANDARDS ENGINEER

/s/ Richard L. VanCleave 9-01-05
DESIGN STANDARDS ENGINEER DATE

/s/ Richard K. Smutzer 9-01-05
CHIEF HIGHWAY ENGINEER DATE

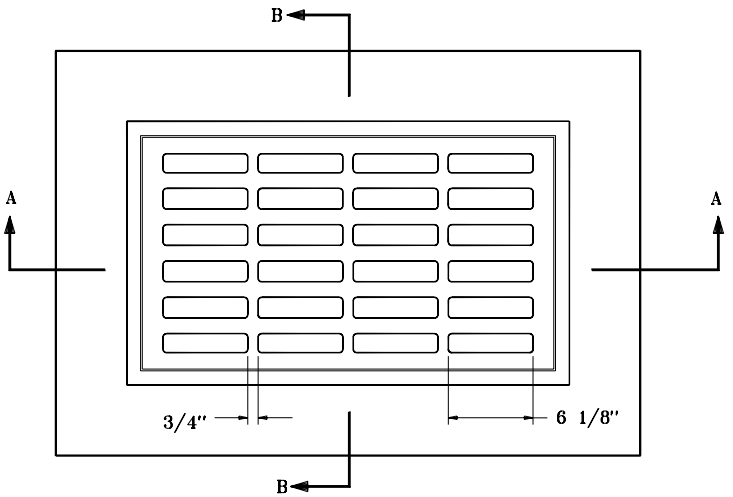

PLAN

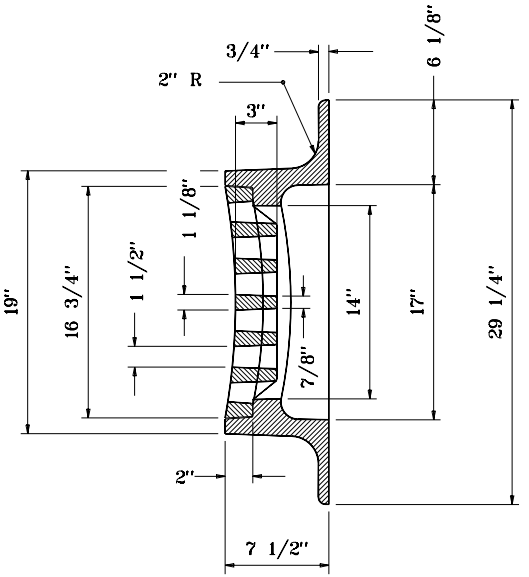

SECTION B–B

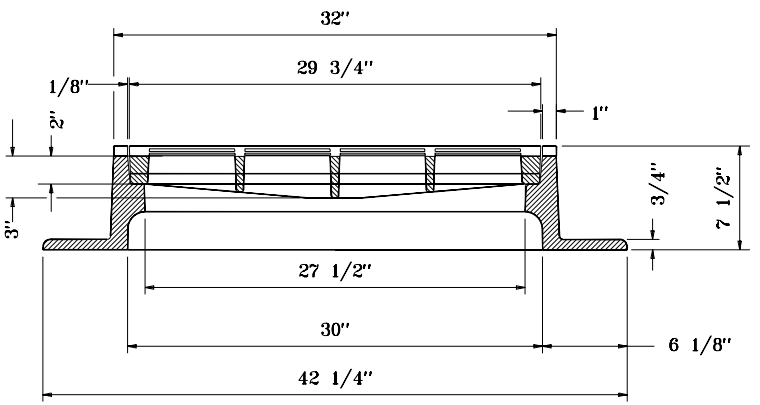

SECTION A–A

FRAME AND GRATE
CASTING TYPE 13

INDIANA DEPARTMENT OF TRANSPORTATION

CASTING TYPE 13
FRAME & GRATE

SEPTEMBER 1998

STANDARD DRAWING NO. **E 720-ICCA-13**

ANTHONY L. UREMOVICH REGISTERED No. 18095 STATE OF INDIANA PROFESSIONAL ENGINEER

DESIGN STANDARDS ENGINEER

DETAILS PLACED IN THIS FORMAT	11-15-99
/s/ Anthony L. Uremovich	11-15-99
DESIGN STANDARDS ENGINEER	DATE
/s/ Firooz Zandi	11-15-99
CHIEF HIGHWAY ENGINEER	DATE
ORIGINALLY APPROVED	9-01-98

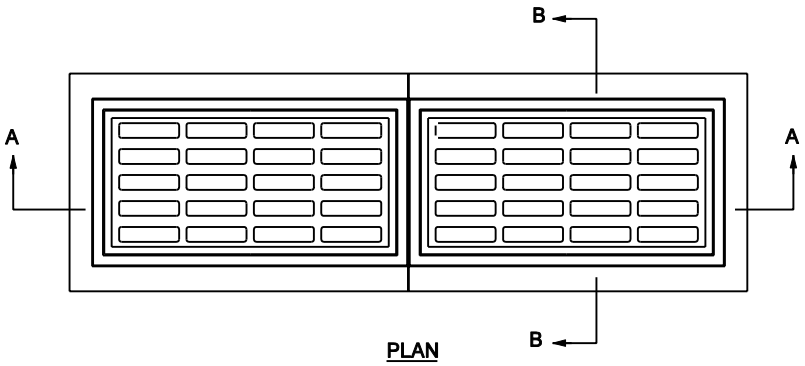

PLAN

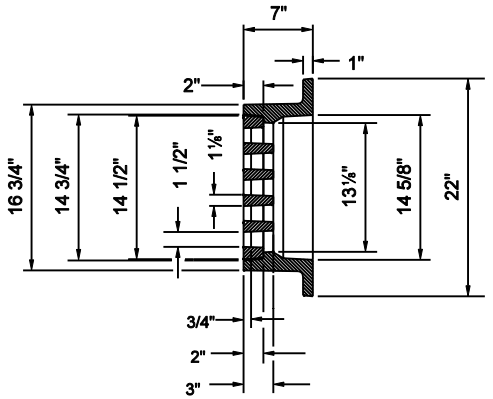

SECTION B-B

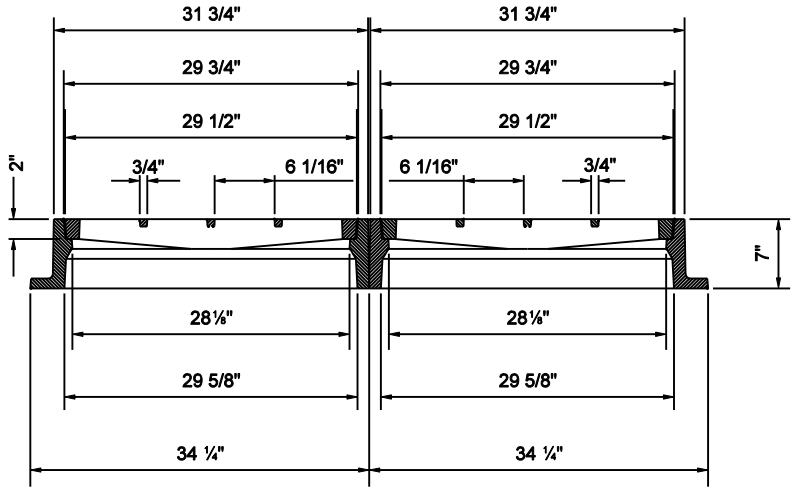

SECTION A-A

FRAME AND GRATE
CASTING TYPE 14

INDIANA DEPARTMENT OF TRANSPORTATION

CASTING TYPE 14
FRAME AND GRATE

SEPTEMBER 2003

STANDARD DRAWING NO. E 720-ICCA-15

RICHARD L. VanCLEAVE REGISTERED No. 9750 STATE OF INDIANA PROFESSIONAL ENGINEER

DESIGN STANDARDS ENGINEER

/s/ Richard L. VanCleave 9-02-03
DESIGN STANDARDS ENGINEER DATE

/s/ Richard K. Smutzer 9-02-03
CHIEF HIGHWAY ENGINEER DATE

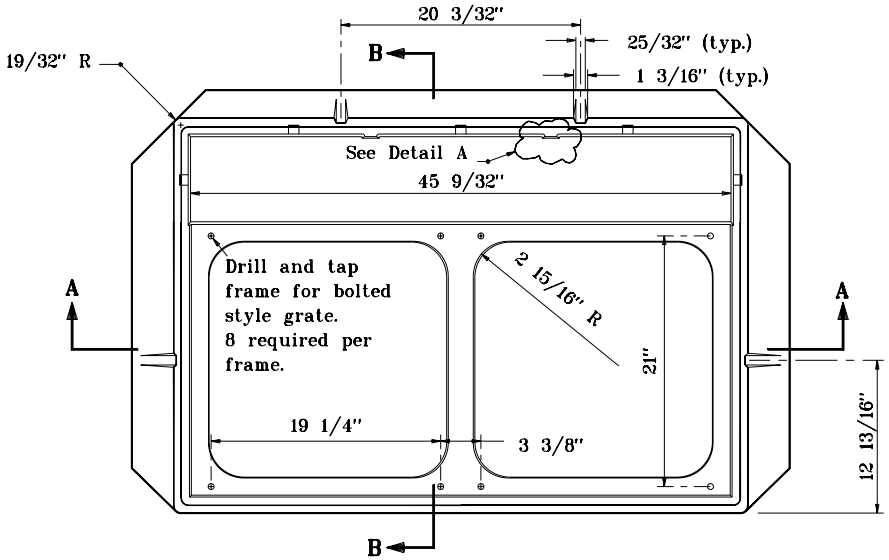

PLAN

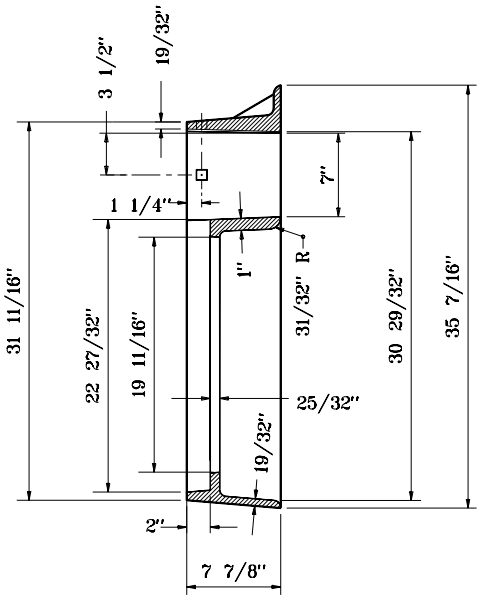

SECTION B–B

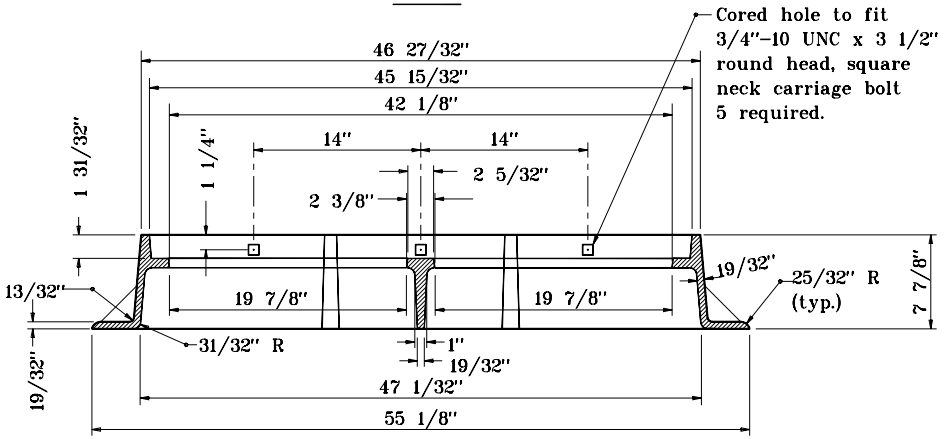

SECTION A–A

FRAME
CASTING TYPE 15

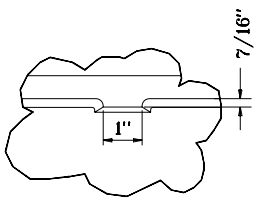

DETAIL A

INDIANA DEPARTMENT OF TRANSPORTATION

CASTING TYPE 15

FRAME

SEPTEMBER 1998

STANDARD DRAWING NO. **E 720-ICCA-16**

ANTHONY L. UREMOVICH REGISTERED No. 18095 STATE OF INDIANA PROFESSIONAL ENGINEER

DESIGN STANDARDS ENGINEER

DETAILS PLACED IN THIS FORMAT	11-15-99
/s/ Anthony L. Uremovich	11-15-99
DESIGN STANDARDS ENGINEER	DATE
/s/ Firooz Zandi	11-15-99
CHIEF HIGHWAY ENGINEER	DATE
ORIGINALLY APPROVED	9-01-98

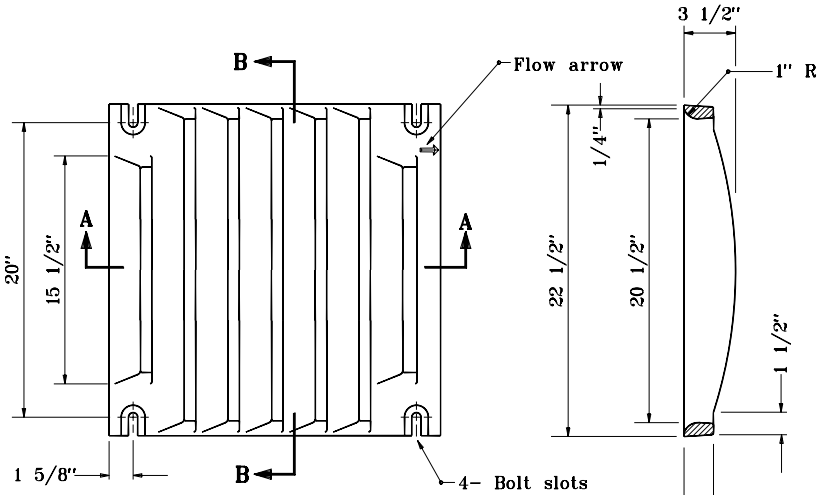

PLAN

SECTION B-B

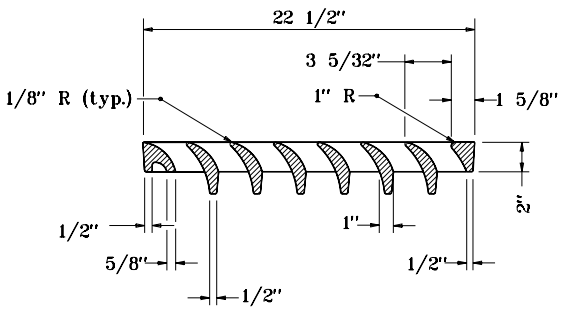

SECTION A-A

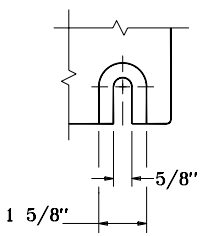

BOLT SLOT DETAIL

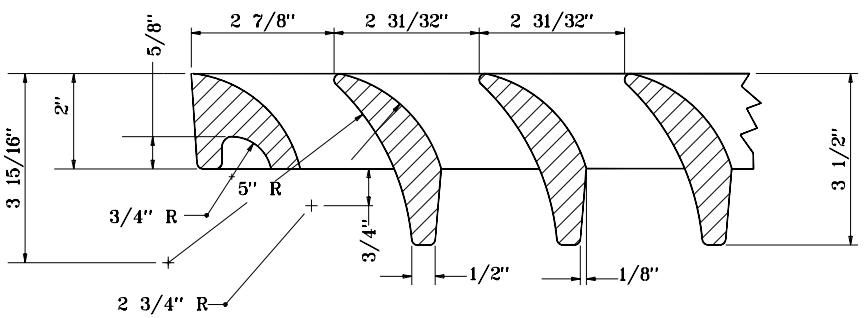

INDIANA DEPARTMENT OF TRANSPORTATION

CASTING TYPE 15 GRATE

SEPTEMBER 1998

STANDARD DRAWING NO. E 720-ICCA-17

ANTHONY L. UREMOVICH REGISTERED No. 18095 STATE OF INDIANA PROFESSIONAL ENGINEER

DESIGN STANDARDS ENGINEER

DETAILS PLACED IN THIS FORMAT 11-15-99

/s/ Anthony L. Uremovich 11-15-99
DESIGN STANDARDS ENGINEER DATE

/s/ Firooz Zandi 11-15-99
CHIEF HIGHWAY ENGINEER DATE

ORIGINALLY APPROVED 9-01-98

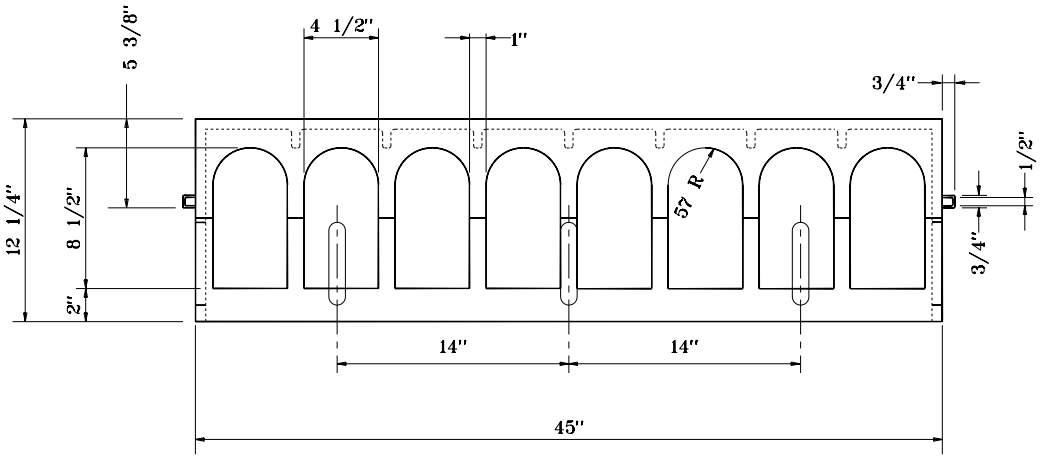

FRONT

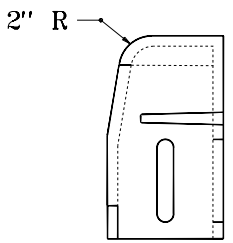

SIDE

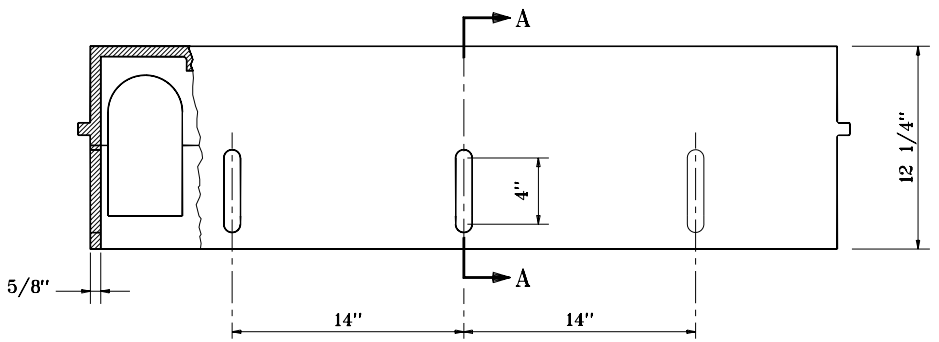

BACK

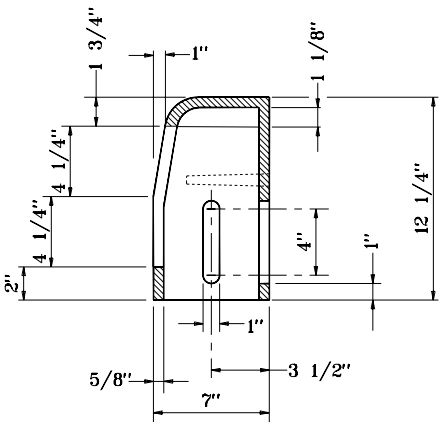

SECTION A-A

INDIANA DEPARTMENT OF TRANSPORTATION

CASTING TYPE 15
CURB BOX

SEPTEMBER 1998

STANDARD DRAWING NO. **E 720-ICCA-18**

ANTHONY L. UREMOVICH REGISTERED No. 18095 STATE OF INDIANA PROFESSIONAL ENGINEER

DESIGN STANDARDS ENGINEER

DETAILS PLACED IN THIS FORMAT	11-15-99
/s/ Anthony L. Uremovich DESIGN STANDARDS ENGINEER	11-15-99 DATE
/s/ Firooz Zandi CHIEF HIGHWAY ENGINEER	11-15-99 DATE
ORIGINALLY APPROVED	9-01-98

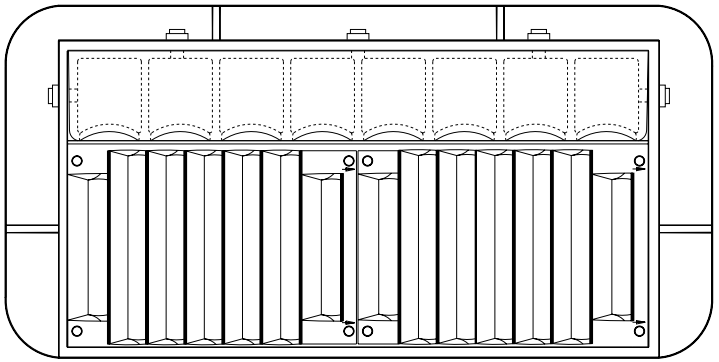

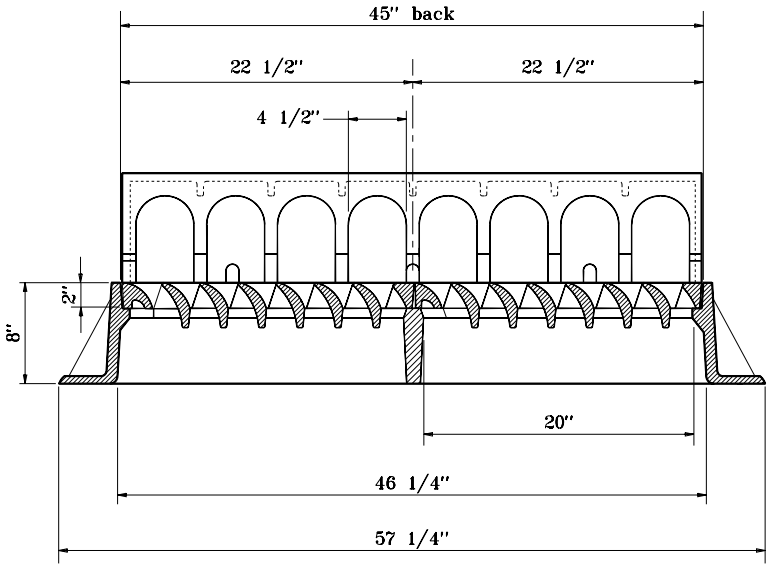

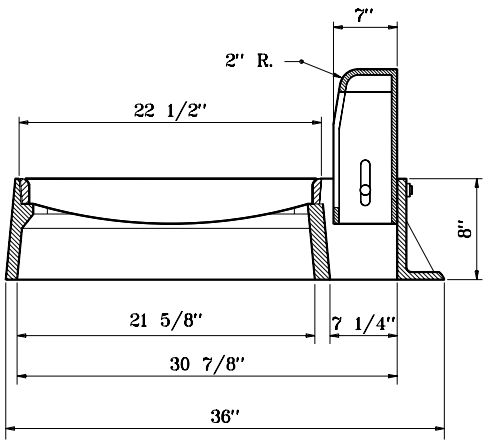

GENERAL NOTES

1. Curb adjustment $5\frac{1}{2}$" to $9\frac{1}{2}$".

INDIANA DEPARTMENT OF TRANSPORTATION

CASTING TYPE 15 (ALTERNATE) FRAME, GRATE, AND CURB BOX

SEPTEMBER 1998

STANDARD DRAWING NO. **E 720-ICCA-19**

ANTHONY L. UREMOVICH REGISTERED No. 18095 STATE OF INDIANA PROFESSIONAL ENGINEER

DESIGN STANDARDS ENGINEER

DETAILS PLACED IN THIS FORMAT	11-15-99
/s/ Anthony L. Uremovich DESIGN STANDARDS ENGINEER	11-15-99 DATE
/s/ Firooz Zandi CHIEF HIGHWAY ENGINEER	11-15-99 DATE
ORIGINALLY APPROVED	9-01-98

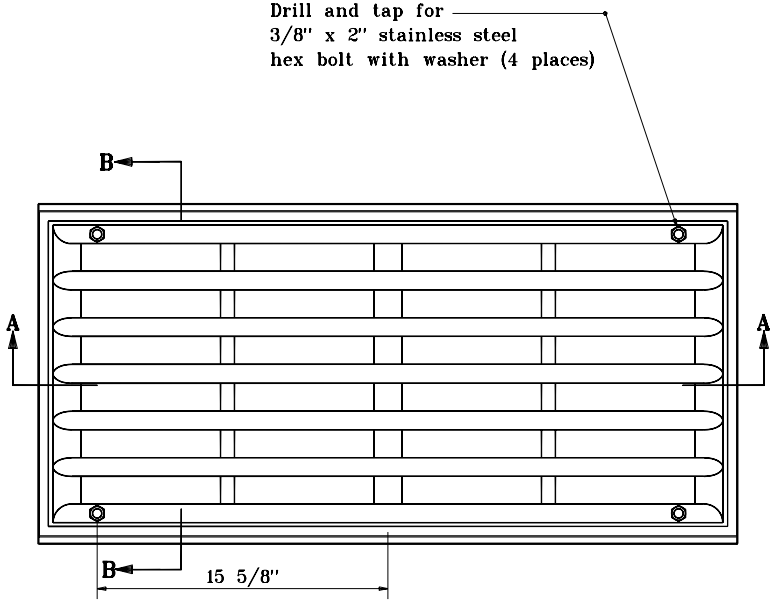

PLAN

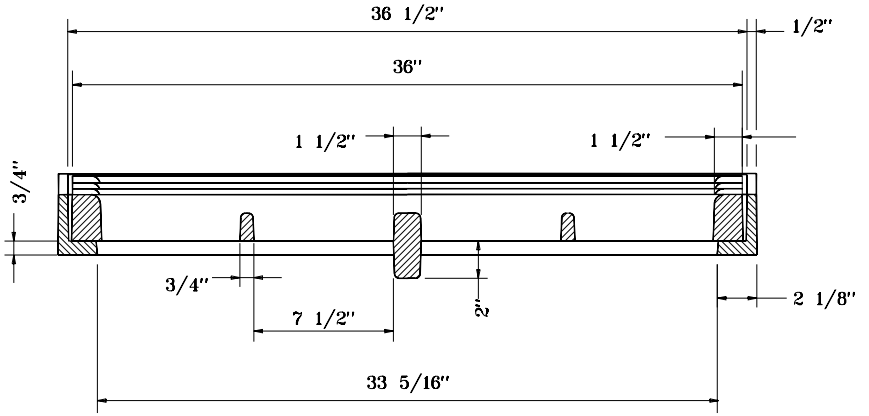

SECTION A–A

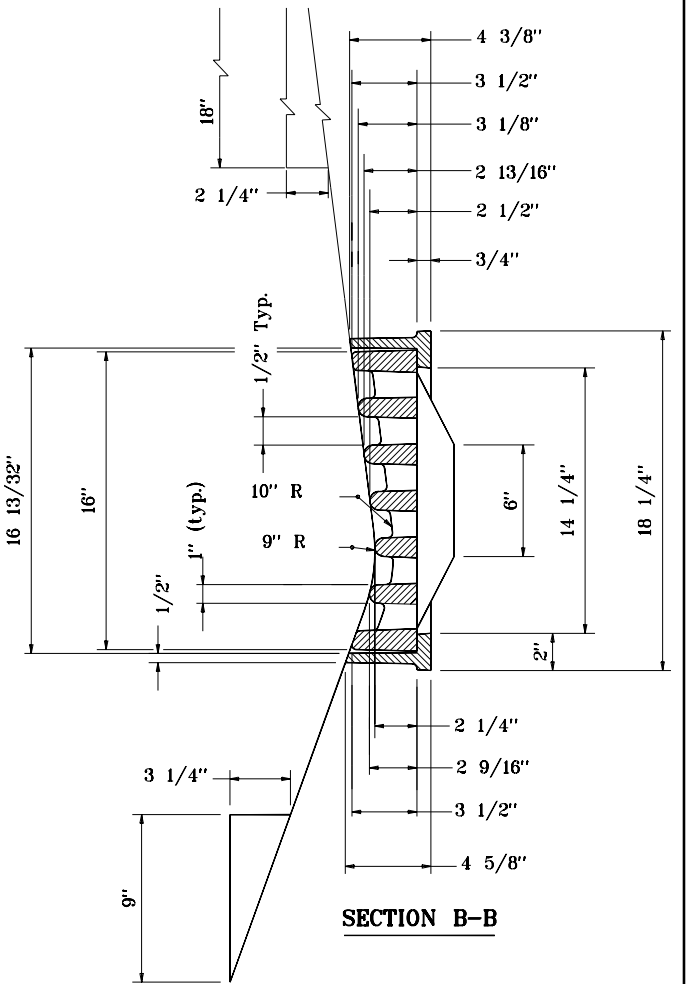

SECTION B–B

INDIANA DEPARTMENT OF TRANSPORTATION

INLET CASTING
TYPE 6

SEPTEMBER 1998

STANDARD DRAWING NO. E 720-INCA-01

ANTHONY L. URENOVICH REGISTERED No. 18095 STATE OF INDIANA PROFESSIONAL ENGINEER

DESIGN STANDARDS ENGINEER

DETAILS PLACED IN THIS FORMAT 11-15-99

/s/ Anthony L. Uremovich 11-15-99
DESIGN STANDARDS ENGINEER DATE

/s/ Firooz Zandi 11-15-99
CHIEF HIGHWAY ENGINEER DATE

ORIGINALLY APPROVED 9-01-98

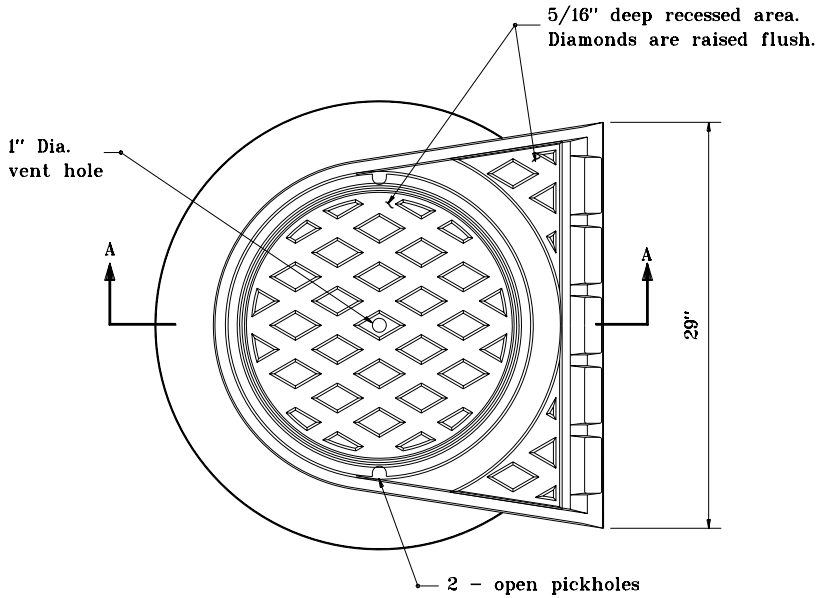

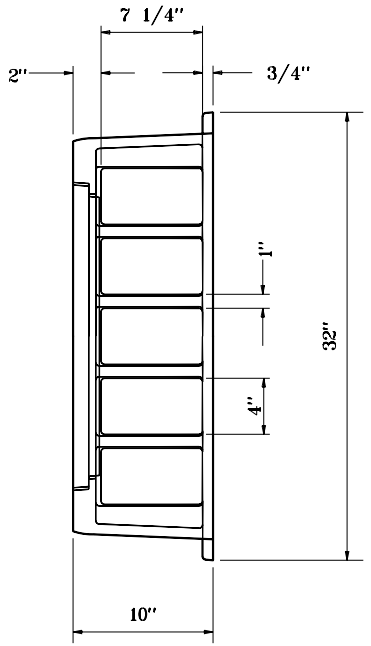

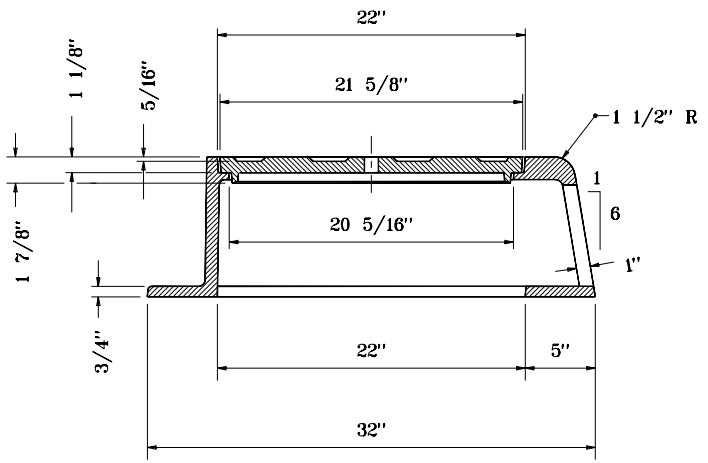

SECTION A-A

CURB CASTING TYPE 3

INDIANA DEPARTMENT OF TRANSPORTATION

CURB INLET CASTING
TYPE 3

SEPTEMBER 1998

STANDARD DRAWING NO. **E 720-INCA-02**

ANTHONY L. UREMOVICH REGISTERED No. 18095 STATE OF INDIANA PROFESSIONAL ENGINEER

DESIGN STANDARDS ENGINEER

DETAILS PLACED IN THIS FORMAT	11-15-99
/s/ Anthony L. Uremovich DESIGN STANDARDS ENGINEER	11-15-99 DATE
/s/ Firooz Zandi CHIEF HIGHWAY ENGINEER	11-15-99 DATE
ORIGINALLY APPROVED	9-01-98

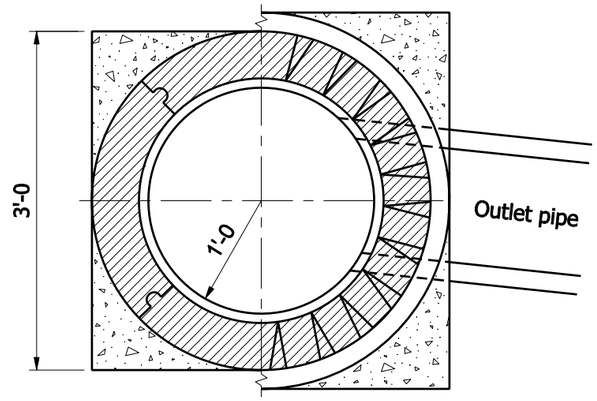

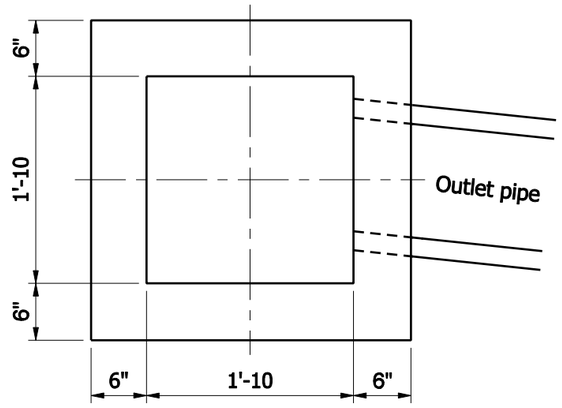

GENERAL NOTES

1. Brick, block, or concrete may be used.
2. T = 8" for brick structure
   T = 6" for segmental block structure
3. In special cases or where inlet pipe is required, A_1, B_1, A_2, and B_2 shall be increased or decreased 1'-0, as directed.
4. 2" dia. pipe drain from bottom of curb to inlet. Aggregate to be placed around inlet end of pipe.
5. 3" dia. pipe to be kept open for drainage of subgrade or base until surface is placed.

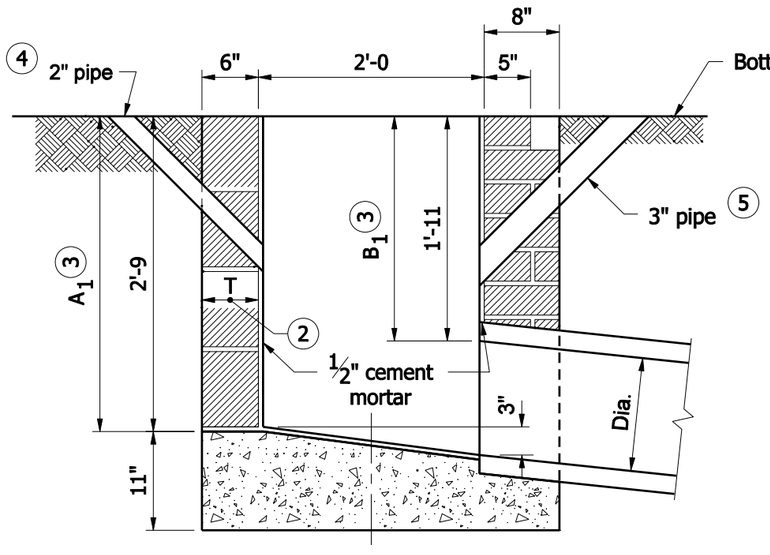

BRICK OR BLOCK

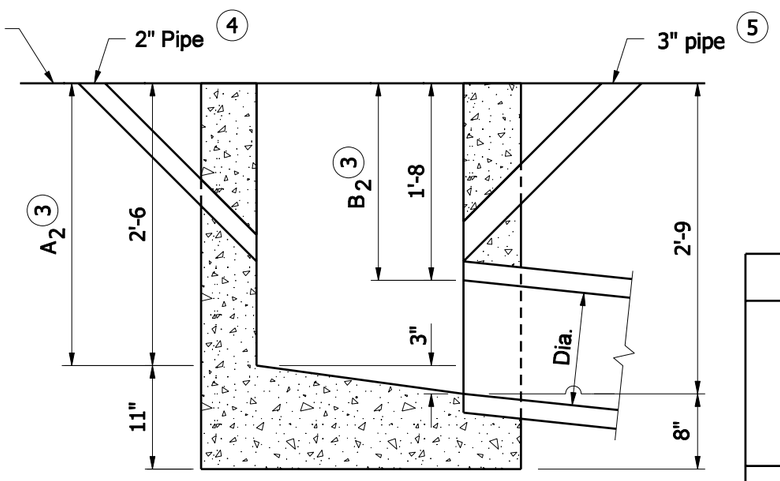

CONCRETE

INDIANA DEPARTMENT OF TRANSPORTATION

INLET TYPE A

SEPTEMBER 2008

STANDARD DRAWING NO. E 720- INST-01

RICHARD L. VanCLEAVE REGISTERED No. 9750 STATE OF INDIANA PROFESSIONAL ENGINEER

DESIGN STANDARDS ENGINEER

/s/ Richard L. VanCleave 09/02/08
DESIGN STANDARDS ENGINEER DATE

/s/ Mark A. Miller 09/02/08
CHIEF HIGHWAY ENGINEER DATE

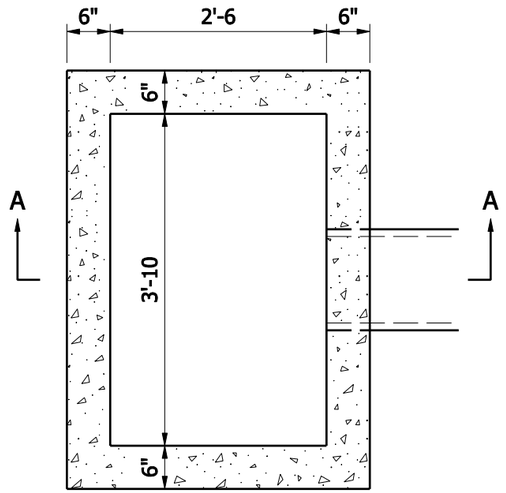

PLAN

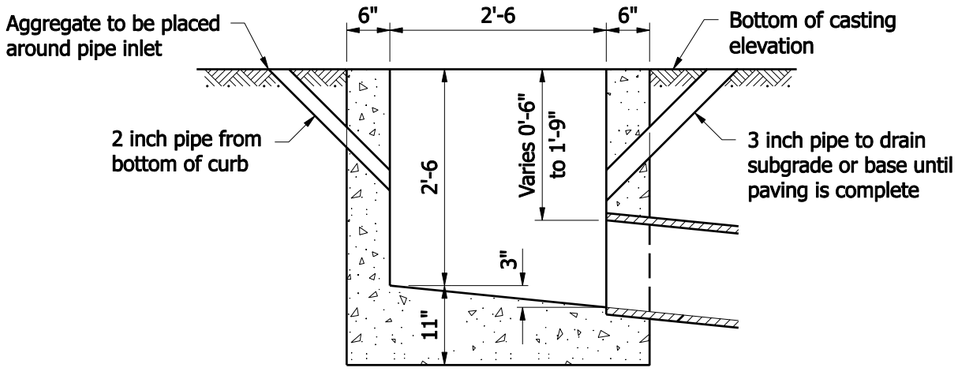

SECTION A-A

INLET-TYPE B

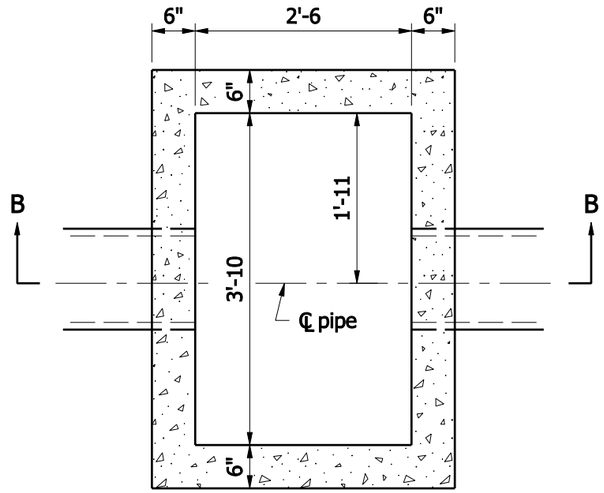

PLAN

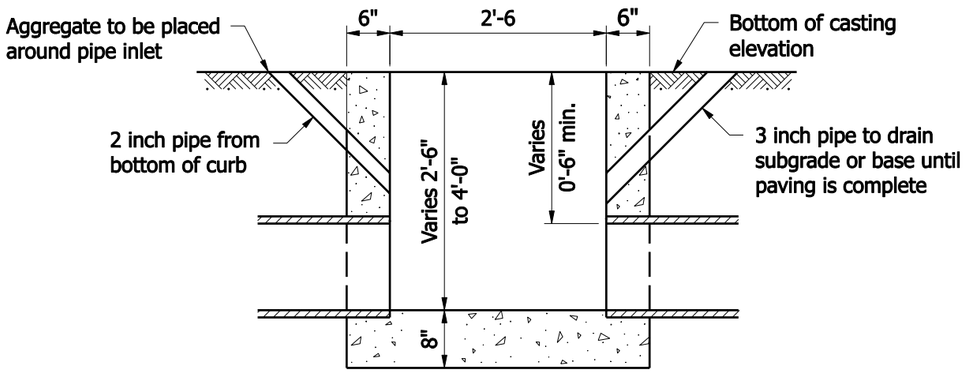

SECTION B-B

INLET-TYPE C

INDIANA DEPARTMENT OF TRANSPORTATION

INLET TYPE B AND C

SEPTEMBER 2008

STANDARD DRAWING NO. E 720- INST-02

RICHARD L. VanCLEAVE REGISTERED No. 9750 STATE OF INDIANA PROFESSIONAL ENGINEER

DESIGN STANDARDS ENGINEER

/s/ Richard L. VanCleave 09/02/08

DESIGN STANDARDS ENGINEER — DATE

/s/ Mark A. Miller 09/02/08

CHIEF HIGHWAY ENGINEER — DATE

GENERAL NOTES

(1) If inlet pipe is required, this dimension shall be increased or decreased 1'–0 as directed.

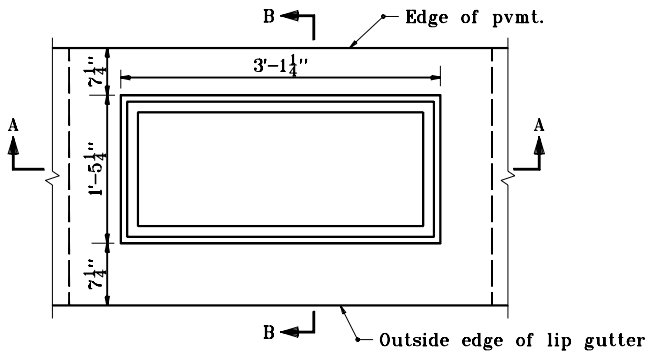

PLAN

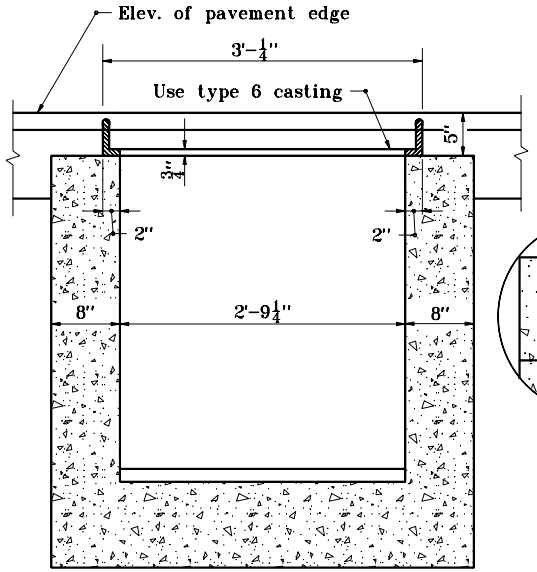

SECTION A–A

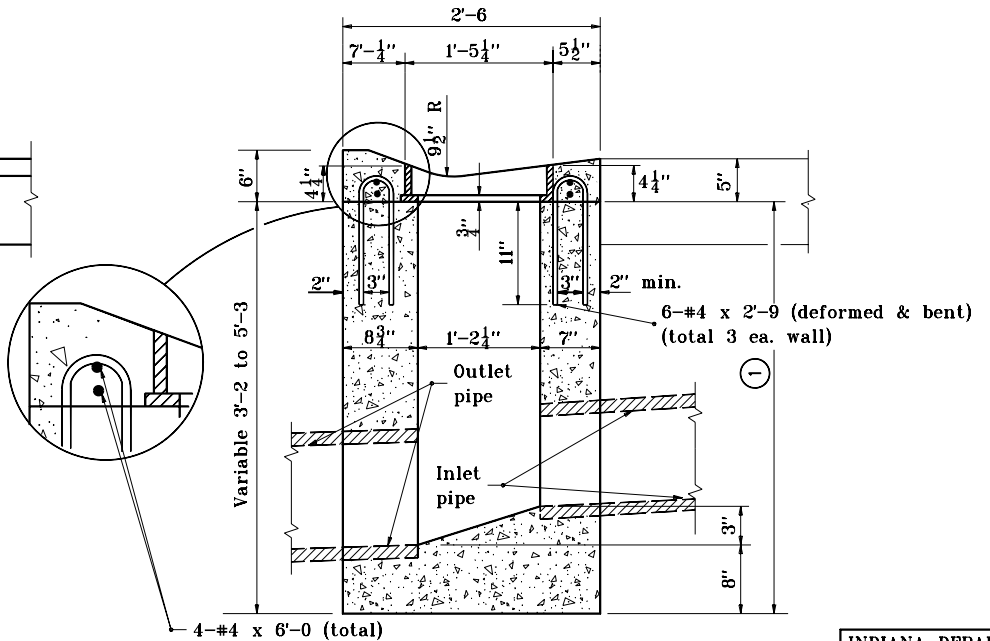

SECTION B–B

INDIANA DEPARTMENT OF TRANSPORTATION

INLET TYPE D

SEPTEMBER 1997

STANDARD DRAWING NO. E 720–INST–03

ANTHONY L. UREMOVICH REGISTERED No. 18095 STATE OF INDIANA PROFESSIONAL ENGINEER

DESIGN STANDARDS ENGINEER

DETAILS PLACED IN THIS FORMAT	11-15-99
/s/ Anthony L. Uremovich DESIGN STANDARDS ENGINEER	11-15-99 DATE
/s/ Firooz Zandi CHIEF HIGHWAY ENGINEER	11-15-99 DATE
ORIGINALLY APPROVED	9-01-97

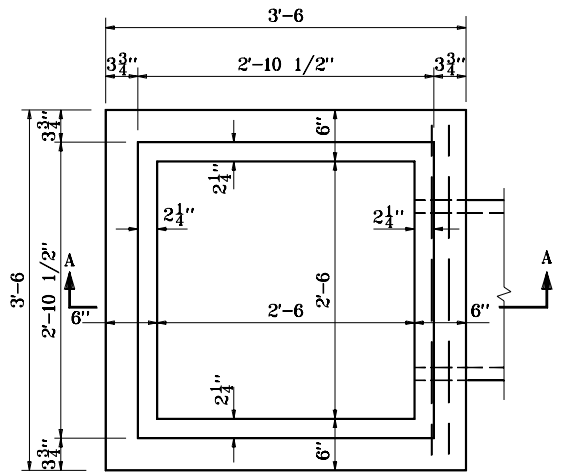

PLAN

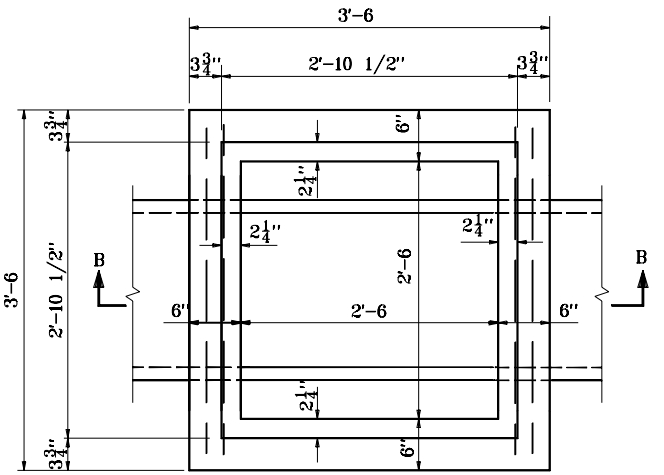

PLAN

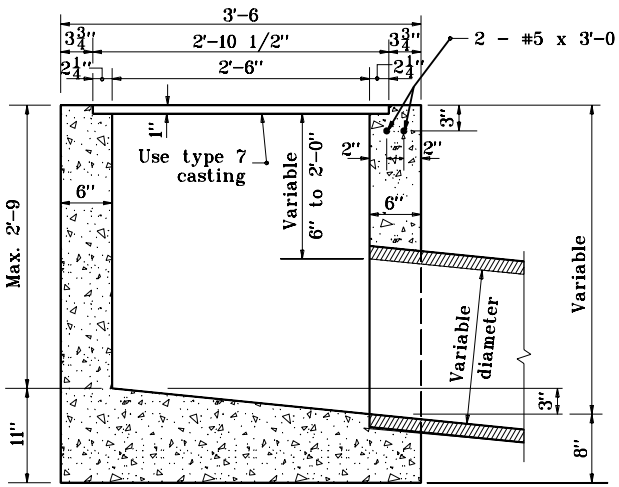

SECTION A-A

INLET TYPE E (CONC.)

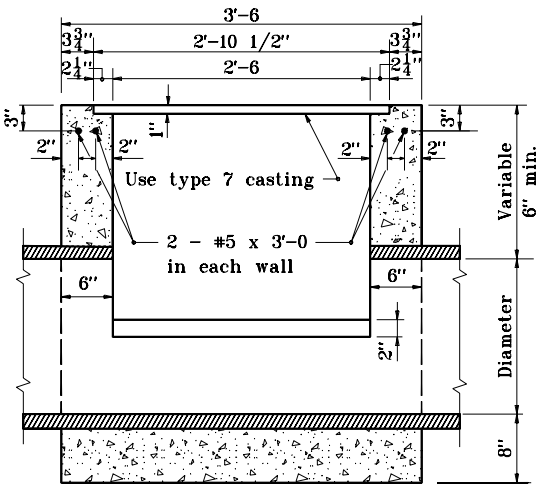

SECTION B-B

INLET TYPE F (CONC.)

INDIANA DEPARTMENT OF TRANSPORTATION

INLETS TYPE E AND F

SEPTEMBER 1997

STANDARD DRAWING NO. **E 720-INST-04**

ANTHONY L. UREMOVICH REGISTERED No. 18095 STATE OF INDIANA PROFESSIONAL ENGINEER

DESIGN STANDARDS ENGINEER

DETAILS PLACED IN THIS FORMAT 11-15-99

/s/ Anthony L. Uremovich 11-15-99
DESIGN STANDARDS ENGINEER DATE

/s/ Firooz Zandi 11-15-99
CHIEF HIGHWAY ENGINEER DATE

ORIGINALLY APPROVED 9-02-97

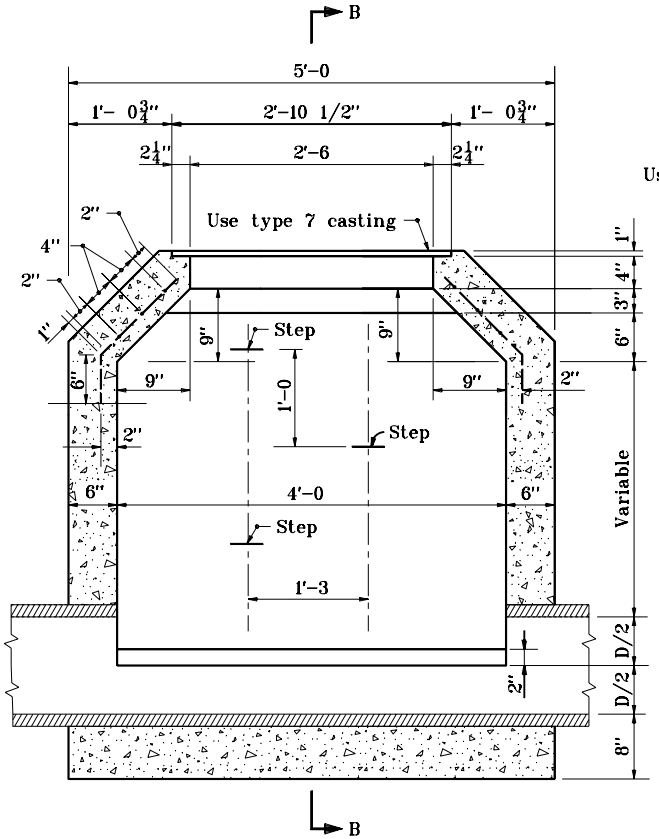

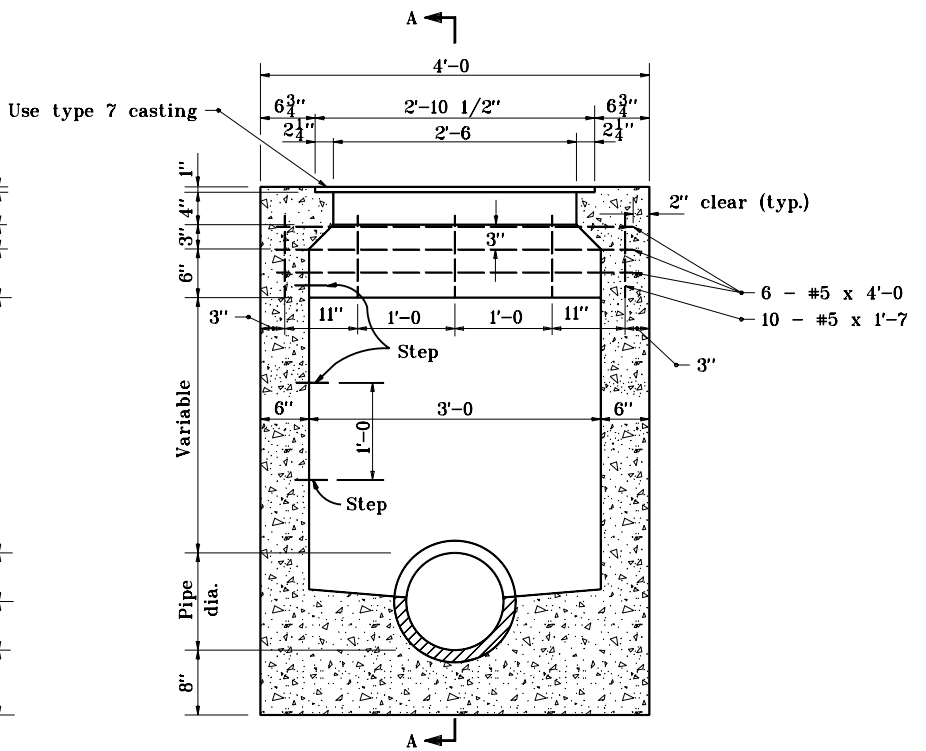

INDIANA DEPARTMENT OF TRANSPORTATION

INLET TYPE G

SEPTEMBER 1997

STANDARD DRAWING NO. E 720-INST-05

ANTHONY L. UREMOVICH REGISTERED No. 18095 STATE OF INDIANA PROFESSIONAL ENGINEER

DESIGN STANDARDS ENGINEER

DETAILS PLACED IN THIS FORMAT 11-15-99

/s/ Anthony L. Uremovich 11-15-99
DESIGN STANDARDS ENGINEER DATE

/s/ Firooz Zandi 11-15-99
CHIEF HIGHWAY ENGINEER DATE

ORIGINALLY APPROVED 9-01-97

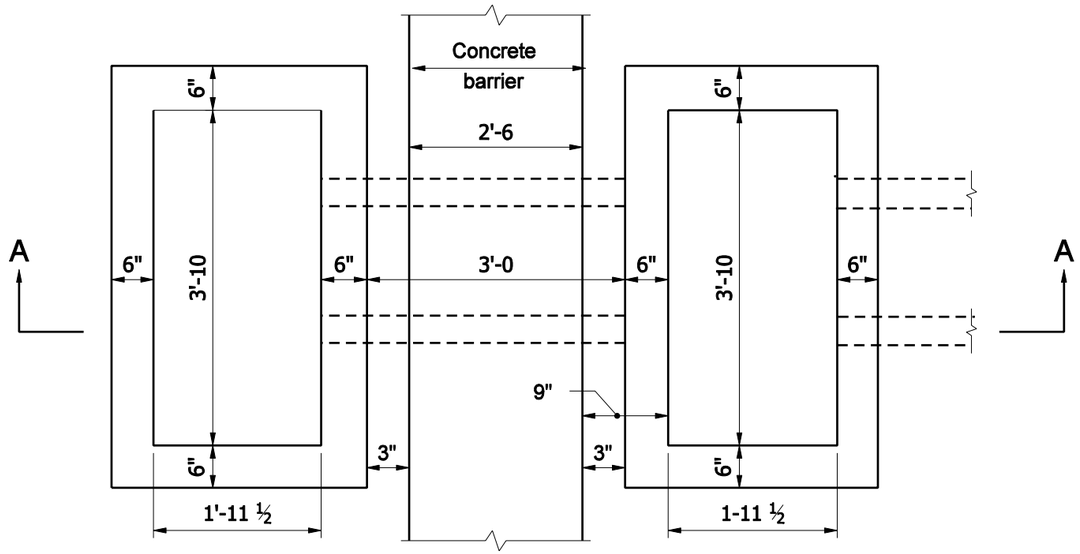

PLAN

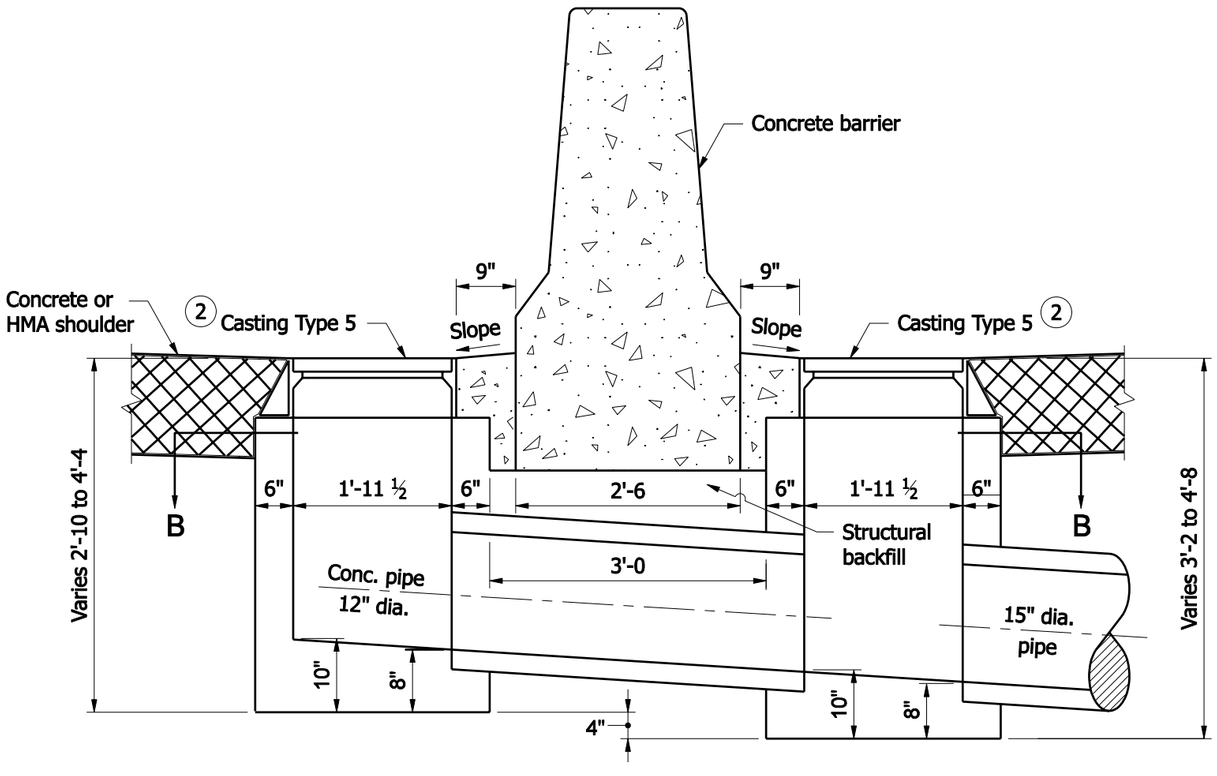

SECTION A-A

NOTES

1. Each inlet Type H includes two boxes and the connector pipe between the inlet boxes.
2. See Standard Drawing E 720-ICCA-01 thru -03 for casting type 5 details.

INDIANA DEPARTMENT OF TRANSPORTATION

INLET TYPE H

SEPTEMBER 2008

STANDARD DRAWING NO. E 720- INST-05A

RICHARD L. VanCLEAVE REGISTERED No. 9750 STATE OF INDIANA PROFESSIONAL ENGINEER

DESIGN STANDARDS ENGINEER

/s/ Richard L. VanCleave 09/02/08
DESIGN STANDARDS ENGINEER DATE

/s/ Mark A. Miller 09/02/08
CHIEF HIGHWAY ENGINEER DATE

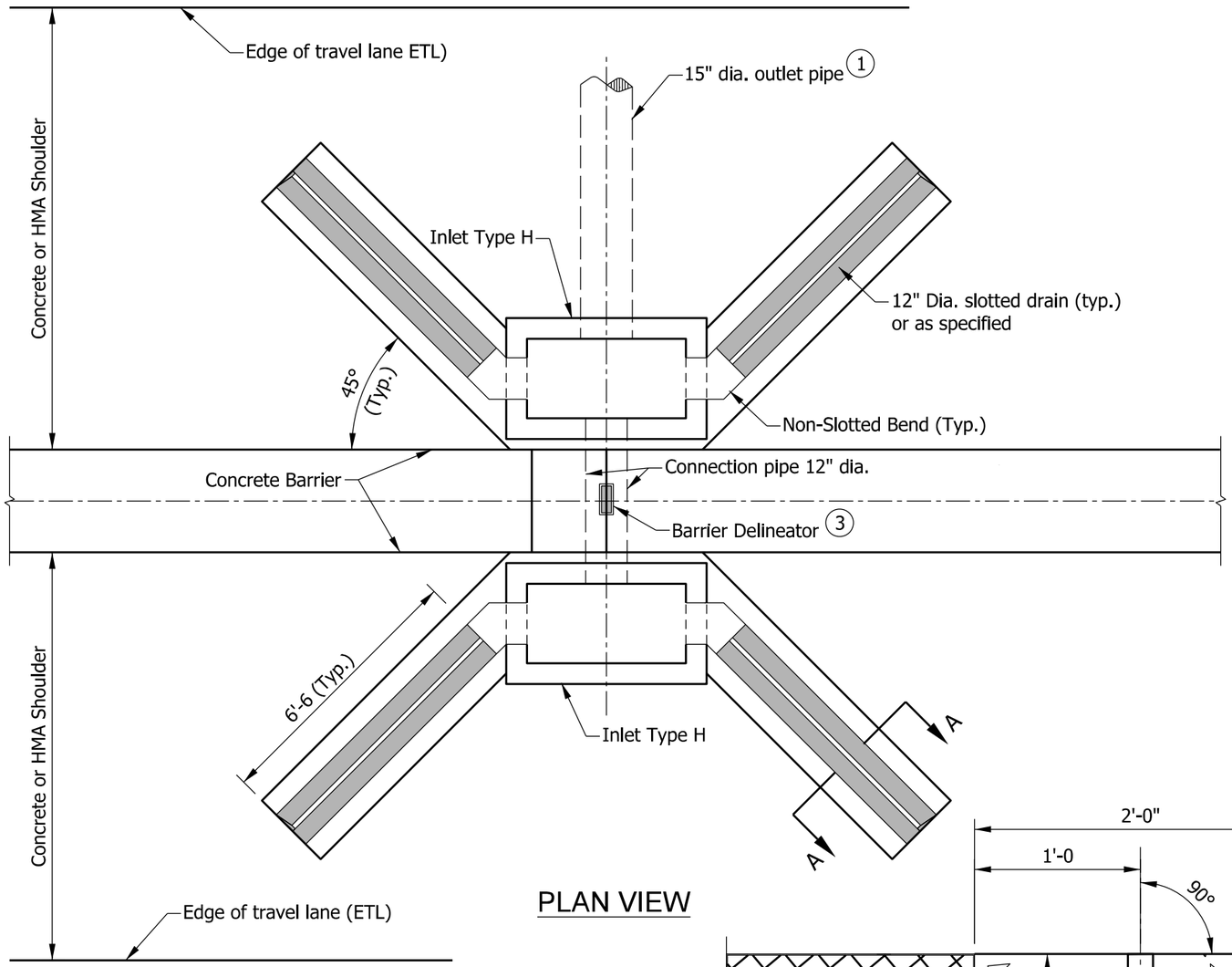

PLAN VIEW

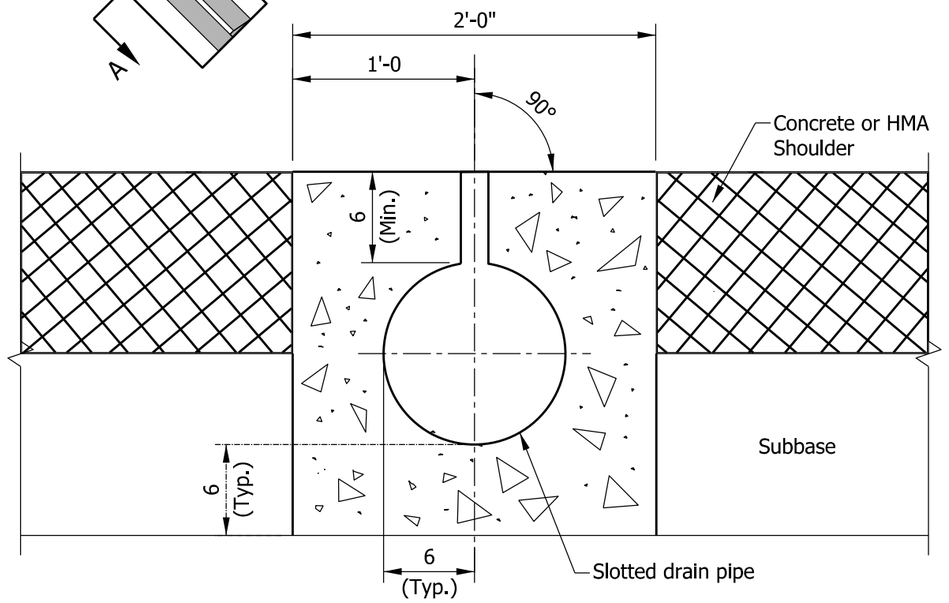

SECTION A-A

NOTES:

(1) Inlet and outlet pipe orientation to meet site conditions.

2. See Standard Drawing E 720-INST-05A for inlet Type H placement and details.

(3) Barrier delineators provided to indicate the location of the inlets and shall be centered on top of concrete barrier at the inlets.

INDIANA DEPARTMENT OF TRANSPORTATION

INLET TYPE H WITH SLOTTED DRAIN PIPE

MARCH 2003

STANDARD DRAWING NO. E 720-INST-05B

RICHARD L. VanCLEAVE
REGISTERED
No. 9750
STATE OF INDIANA
PROFESSIONAL ENGINEER

/s/ Richard L. VanCleave 03/03/03
DESIGN STANDARDS ENGINEER DATE

/s/ Richard Smutzer 03/03/03
CHIEF ENGINEER DATE

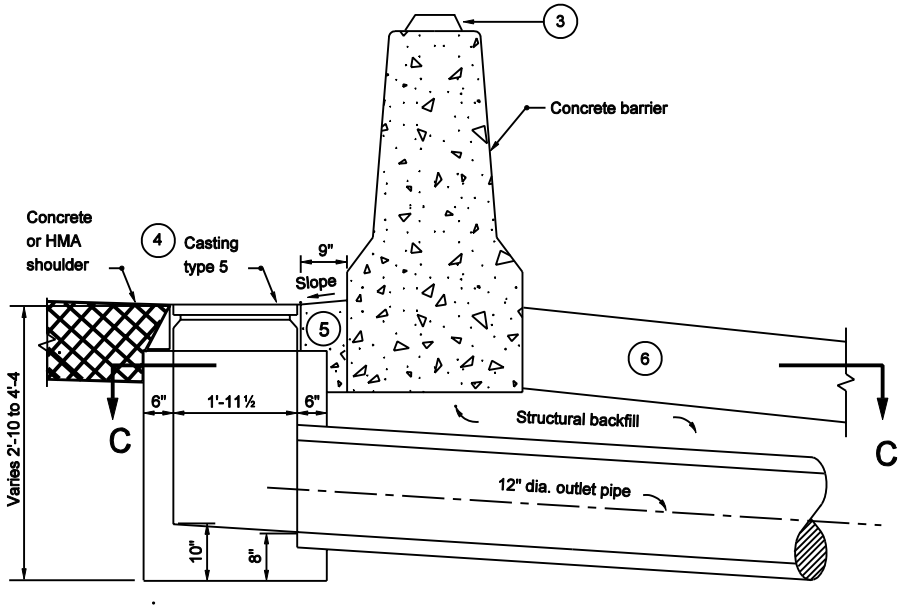

SECTION B-B

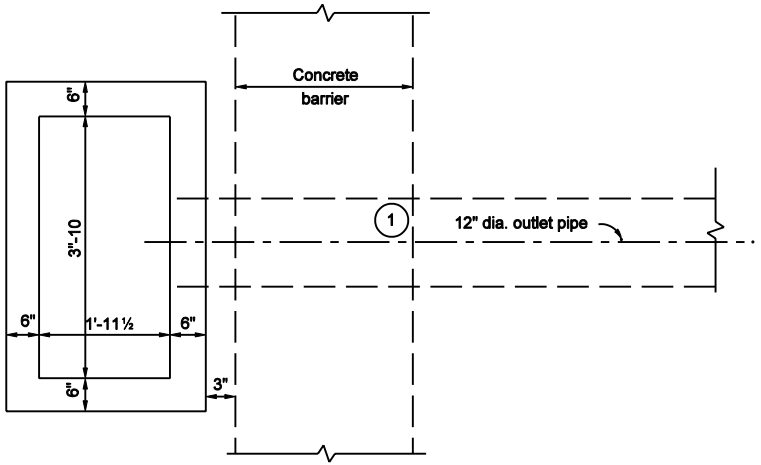

SECTION C-C

NOTES :

1. Outlet pipe orientation to meet site conditions.
2. See Standard Drawing E 720-INST-05D for Type HA inlet with slotted drain pipe placement.
3. All barrier delineator assemblies shall be centered on top of concrete barrier at the inlets.
4. See Standard Drawing E 720-ICCA-01 to -03 for casting type 5 details.
5. Concrete shoulder or pavement between type 5 casting and concrete barrier wall.
6. Concrete, HMA or earth shoulder as appropriate at site.

INDIANA DEPARTMENT OF TRANSPORTATION

INLET TYPE HA
SECTION B-B

MARCH 2003

STANDARD DRAWING NO. E 720-INST-05C

RICHARD L. VanCLEAVE REGISTERED No. 9750 STATE OF INDIANA PROFESSIONAL ENGINEER

DESIGN STANDARDS ENGINEER

/s/ Richard L. VanCleave — 3-03-03
DESIGN STANDARDS ENGINEER — DATE

/s/ Richard K. Smutzer — 3-03-03
CHIEF HIGHWAY ENGINEER — DATE

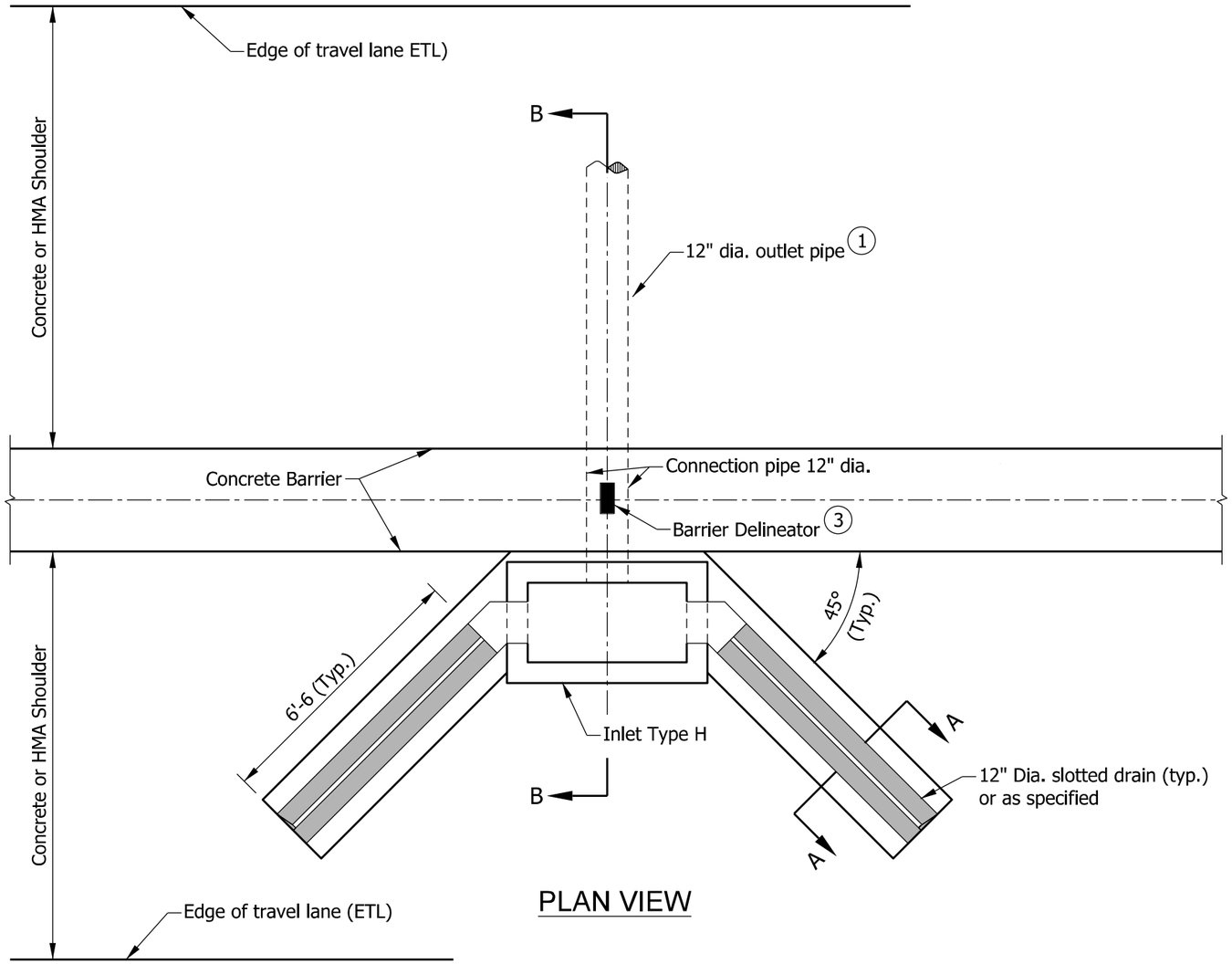

PLAN VIEW

NOTES:

1. Inlet and outlet pipe orientation to meet site conditions.
2. See Standard Drawing E 720-INST-05B for section A-A.
3. All barrier delineators assemblies shall be centered on top of concrete barrier at the inlets.
4. See Standard Drawing E 720-INST-05C for section B-B.

INDIANA DEPARTMENT OF TRANSPORTATION

INLET TYPE HA
WITH SLOTTED DRAIN PIPE

MARCH 2003

STANDARD DRAWING NO. E 720-INST-05D

RICHARD L. VanCLEAVE
REGISTERED
No. 9750
STATE OF INDIANA
PROFESSIONAL ENGINEER

/s/ Richard L. VanCleave	03/03/03
DESIGN STANDARDS ENGINEER	DATE
/s/ Richard Smutzer	03/03/03
CHIEF ENGINEER	DATE

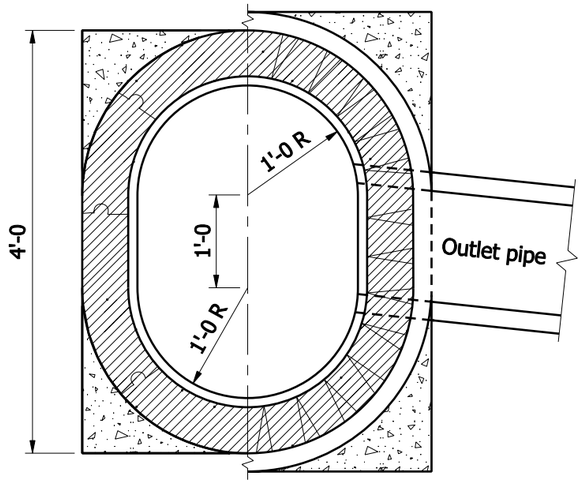

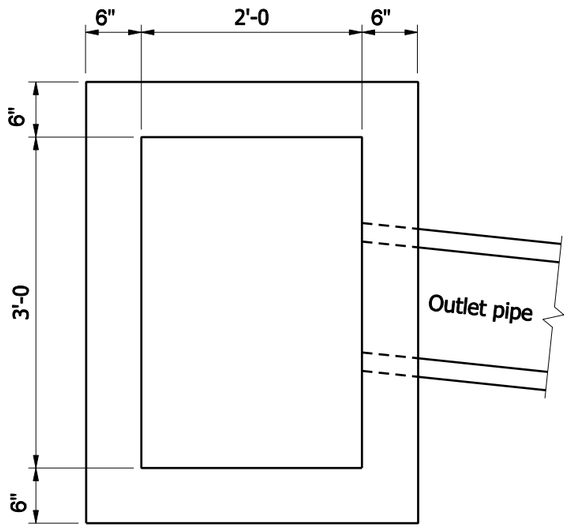

GENERAL NOTES

1. Brick, block, or concrete may be used.
2. T = 8" for brick structure
   T = 6" for segmental block structure
3. In special cases or where inlet pipe is required, A_1, B_1, A_2, and B_2 shall be increased or decreased 1'-0, as directed.
4. 2" dia. pipe drain from bottom of curb to inlet. Aggregate to be placed around inlet end of pipe.
5. 3" dia. pipe to be kept open for drainage of subgrade or base until surface is placed.

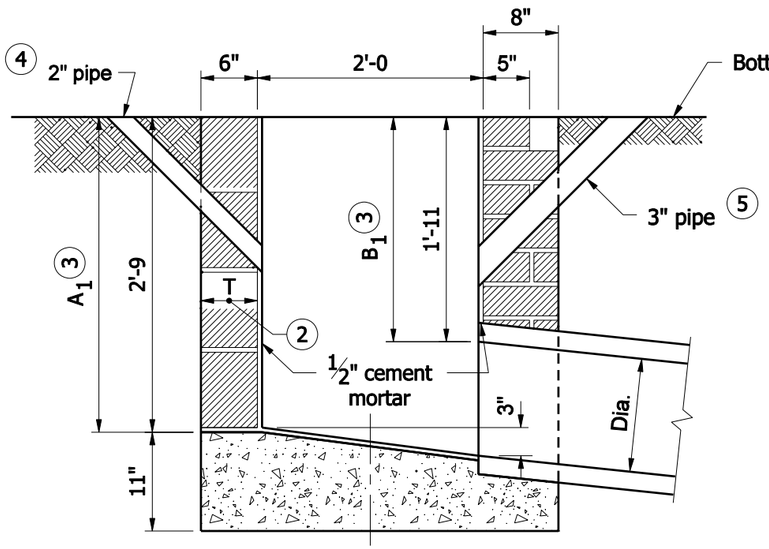

BRICK OR BLOCK

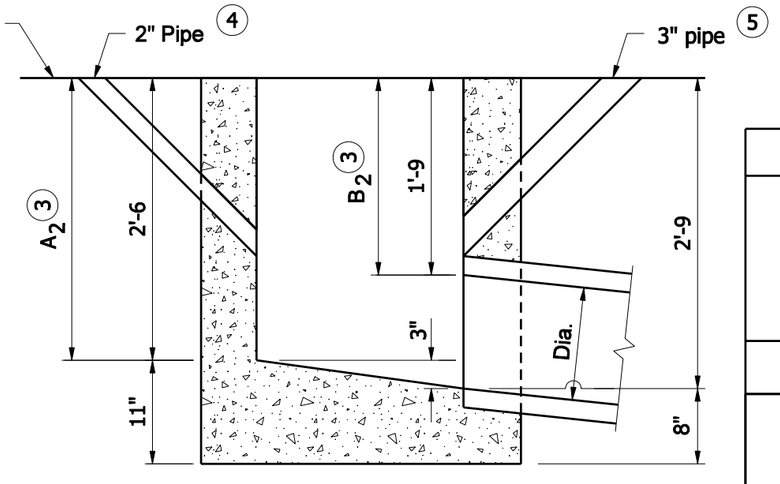

CONCRETE

INDIANA DEPARTMENT OF TRANSPORTATION

INLET TYPE J

SEPTEMBER 2008

STANDARD DRAWING NO. E 720- INST-06

RICHARD L. VanCLEAVE REGISTERED No. 9750 STATE OF INDIANA PROFESSIONAL ENGINEER

DESIGN STANDARDS ENGINEER

/s/ Richard L. VanCleave 09/02/08
DESIGN STANDARDS ENGINEER — DATE

/s/ Mark A. Miller 09/02/08
CHIEF HIGHWAY ENGINEER — DATE

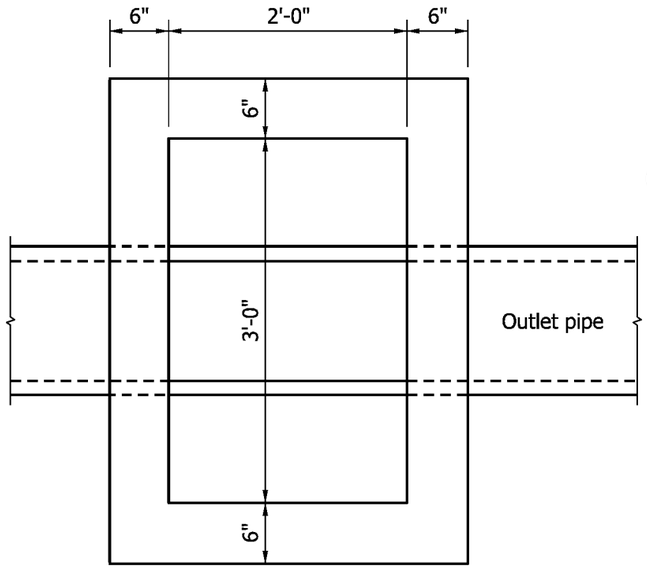

PLAN

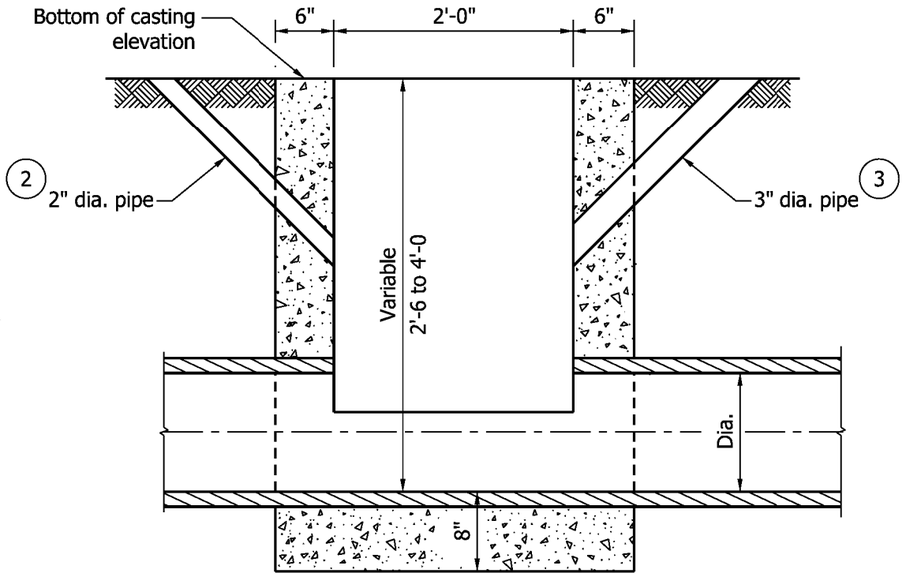

SECTION

INLET TYPE M (CONC)

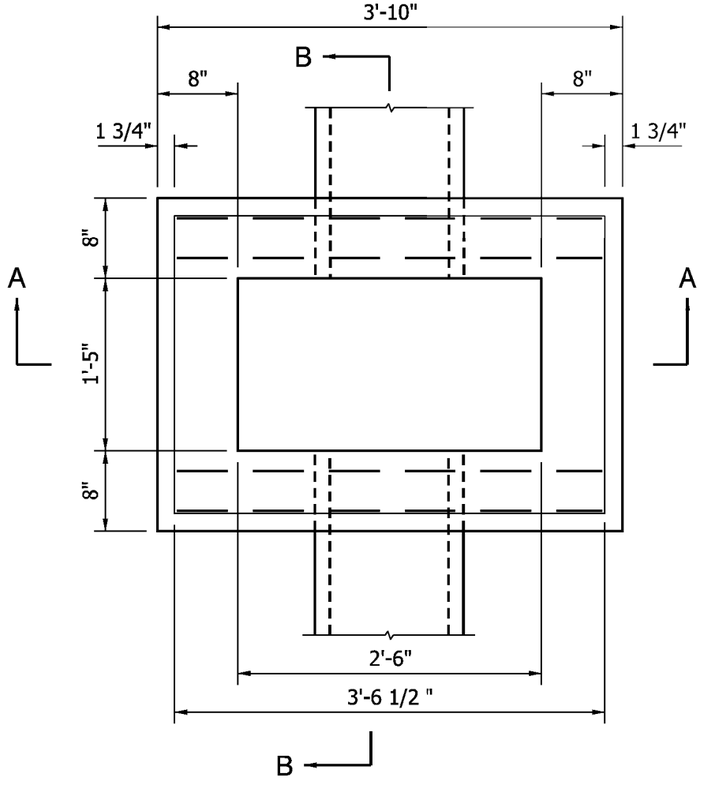

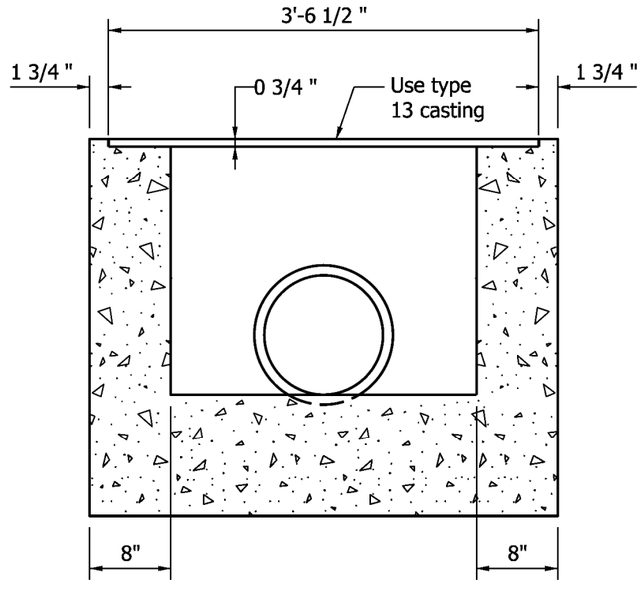

SECTION A-A
INLET TYPE R (Conc.)

GENERAL NOTES

1. If inlet pipe is required, A_1 and B_1 shall be increased or decreased 1'-0 as directed.
2. 2" dia. drain from bottom of curb to inlet. Aggregate to be placed around inlet end of pipe.
3. 3" min. dia. pipe to be kept open for drainage of subgrade or base until surface is placed.

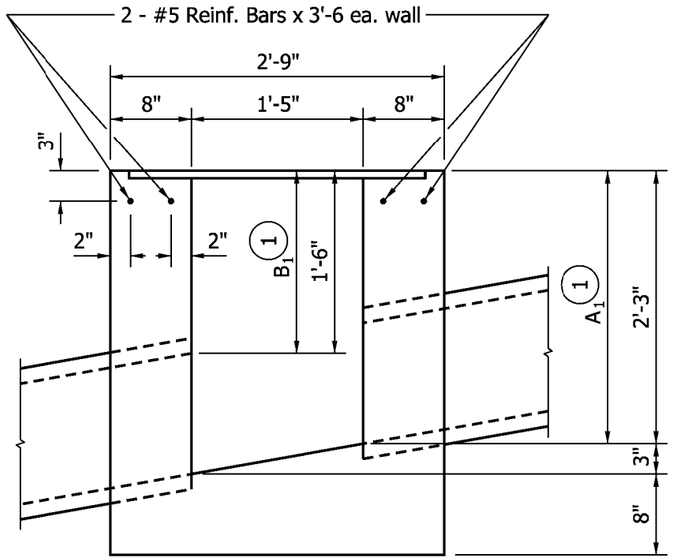

SECTION B-B

INDIANA DEPARTMENT OF TRANSPORTATION

INLET TYPE M & R

SEPTEMBER 2009

STANDARD DRAWING NO. E 720 INST-07

RICHARD L. VanCLEAVE REGISTERED No. 9750 STATE OF INDIANA PROFESSIONAL ENGINEER

DESIGN STANDARDS ENGINEER

/s/ Richard L. VanCleave 09/01/09
DESIGN STANDARDS ENGINEER — DATE

/s/ Mark A. Miller 09/01/09
CHIEF HIGHWAY ENGINEER — DATE

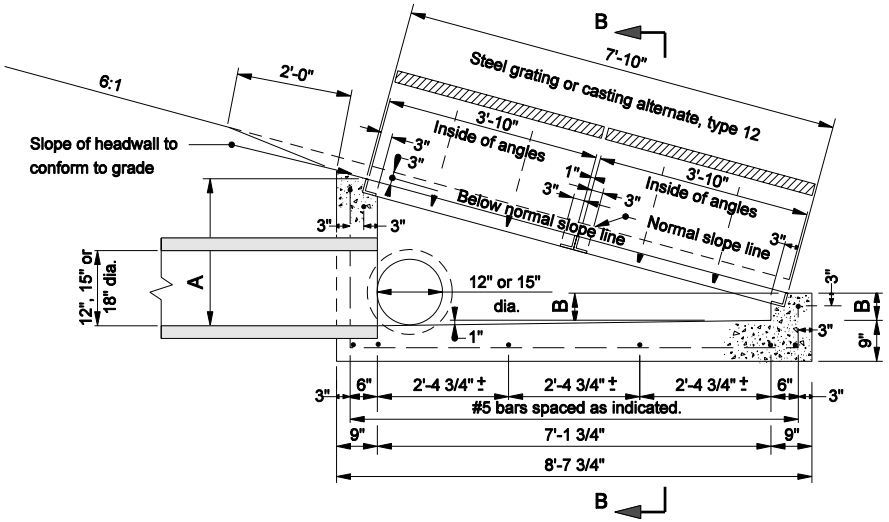

SECTION A-A
Showing Grate Slope of 6:1

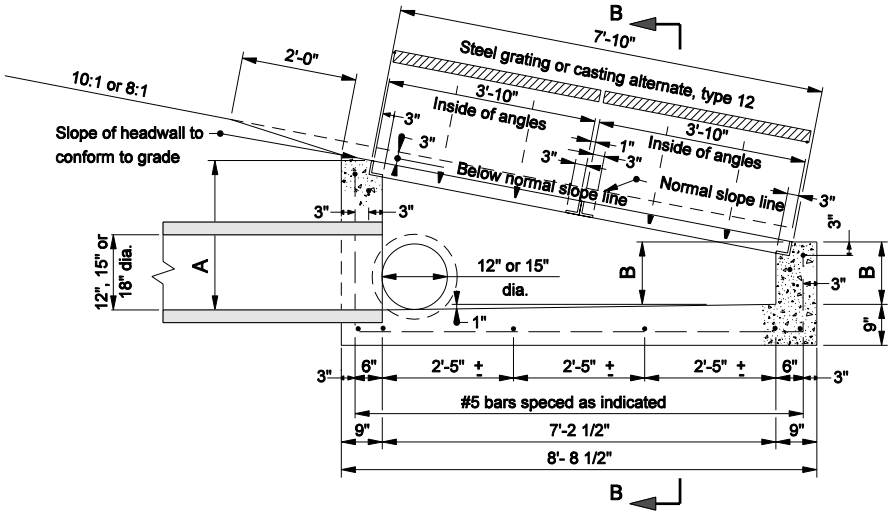

SECTION A-A
Showing Grate Slope of 8:1 or 10:1

TYPE N INLET						
PIPE	6:1		8:1		10:1	
SIZE	A	B	A	B	A	B
12"	21 1/2"	5"	21 1/2"	8 7/8"	21 1/2"	11 1/8"
15"	24 3/4"	8 1/4"	24 3/4"	12 1/8"	24 3/4"	14 3/8"
18"	28"	11 1/2"	28"	15 3/8"	28"	17 5/8"

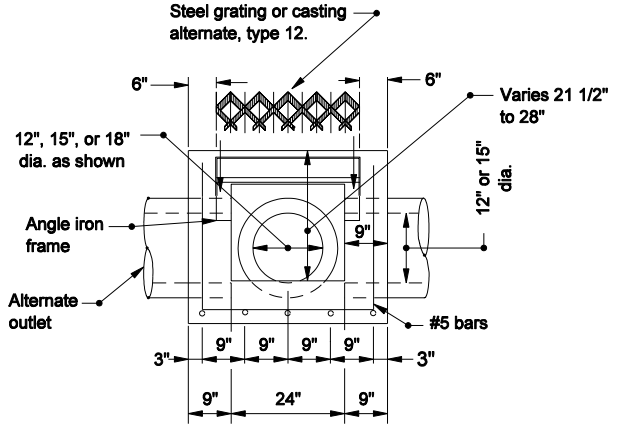

SECTION B-B

INDIANA DEPARTMENT OF TRANSPORTATION

INLET TYPE N

SEPTEMBER 2005

STANDARD DRAWING NO. E 720-INST-08

RICHARD L. VanCLEAVE REGISTERED No. 9750 STATE OF INDIANA PROFESSIONAL ENGINEER

DESIGN STANDARDS ENGINEER

/s/ Richard L. VanCleave 9-01-05
DESIGN STANDARDS ENGINEER DATE

/s/ Richard K. Smutzer 9-01-05
CHIEF HIGHWAY ENGINEER DATE

NOTE:

1. See Standard Drawing E 720-ICCA-10 for steel grating Type 12 or E 720-ICCA-11 for casting Type 12 Alternate.

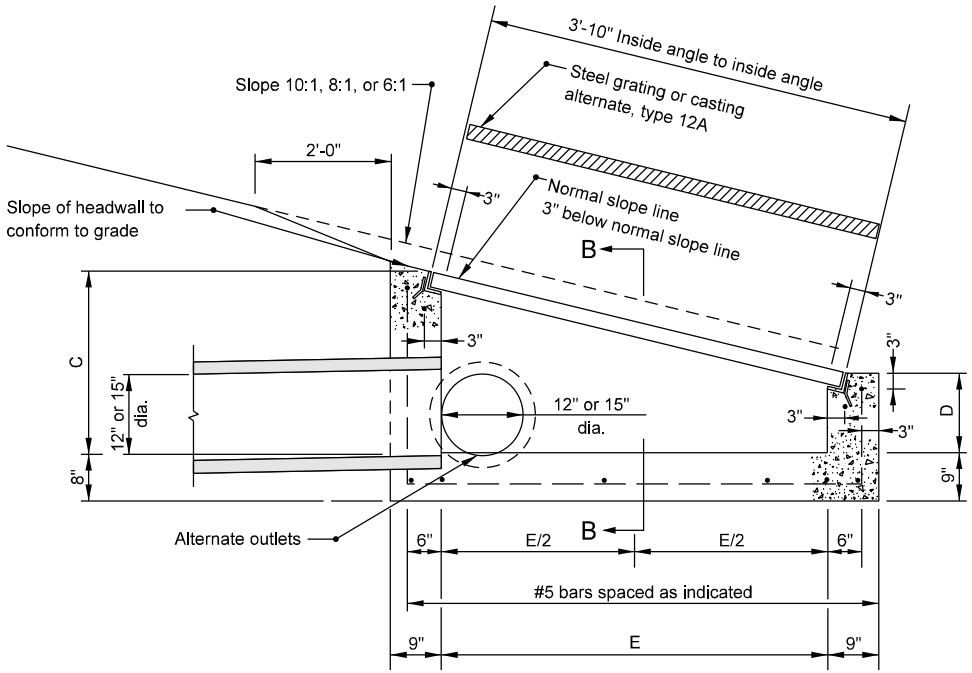

TYPE P INLET

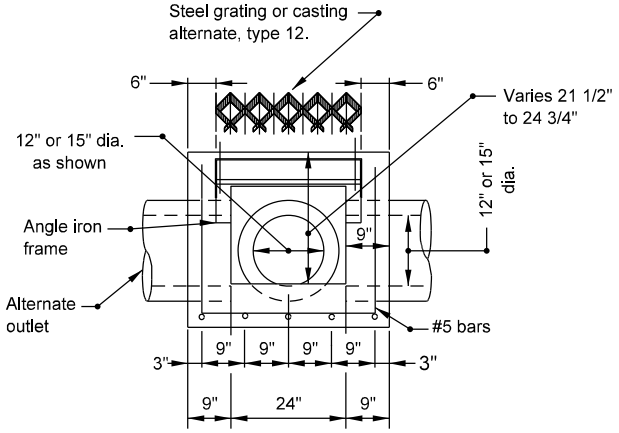

SECTION B-B

TYPE P INLET									
PIPE SIZE	6:1			8:1			10:1		
	C	D	E	C	D	E	C	D	E
12"	21 1/2"	13"	3'-3 1/4"	21 1/2"	14 1/2"	3'-3 3/4"	21 1/2"	15 7/8"	3'-3 3/4"
15"	24 3/4"	16 1/4"	3'-3 1/4"	24 3/4"	18"	3'-3 3/4"	24 3/4"	19 1/8"	3'-3 3/4"

INDIANA DEPARTMENT OF TRANSPORTATION

INLET TYPE P

SEPTEMBER 2005

STANDARD DRAWING NO. E 720-INST-09

RICHARD L. VanCLEAVE REGISTERED No. 9750 STATE OF INDIANA PROFESSIONAL ENGINEER

DESIGN STANDARDS ENGINEER

/s/ Richard L.VanCleave 9-01-05
DESIGN STANDARDS ENGINEER DATE

/s/ Richard K.Smutzer 9-01-05
CHIEF HIGHWAY ENGINEER DATE

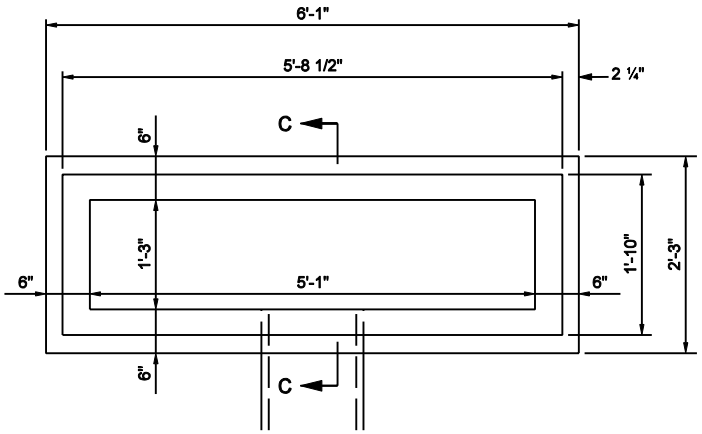

PLAN

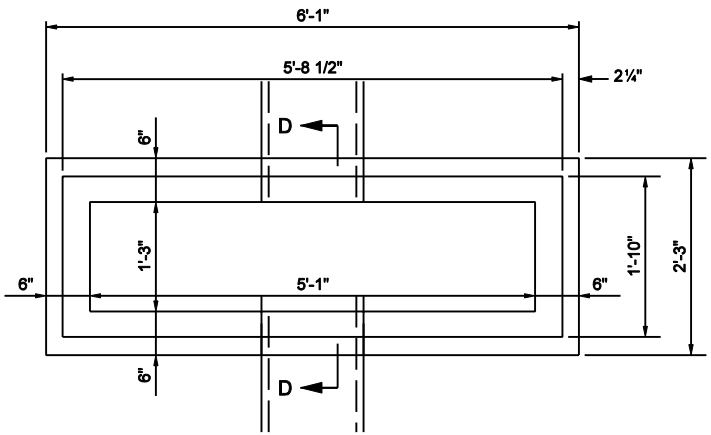

PLAN

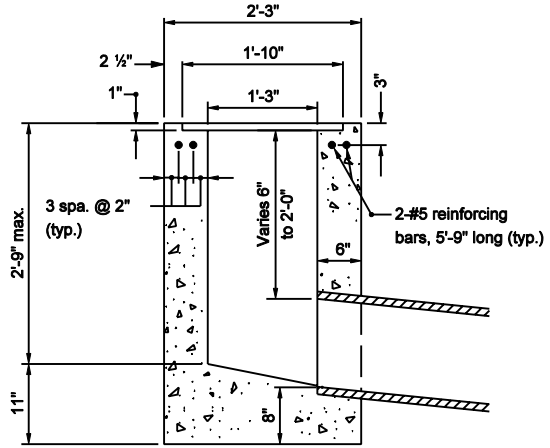

SECTION C-C

TYPE S

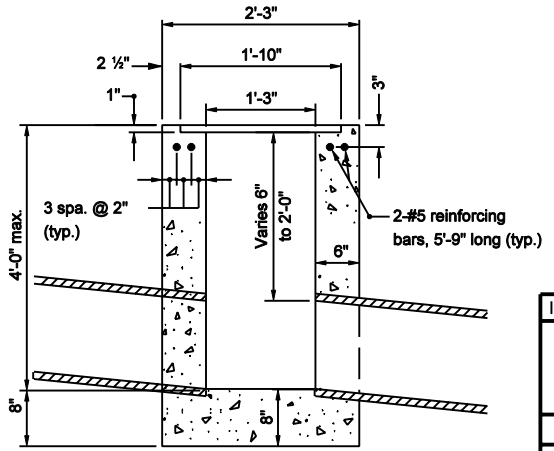

SECTION D-D

TYPE T

INDIANA DEPARTMENT OF TRANSPORTATION

INLETS TYPE S AND T

SEPTEMBER 2003

STANDARD DRAWING NO. E 720-INST-10

RICHARD L. VANCLEAVE REGISTERED No. 9750 STATE OF INDIANA PROFESSIONAL ENGINEER

DESIGN STANDARDS ENGINEER

/s/ Richard L. VanCleave — 9-02-03
DESIGN STANDARDS ENGINEER — DATE

/s/ Richard K. Smutzer — 9-02-03
CHIEF HIGHWAY ENGINEER — DATE

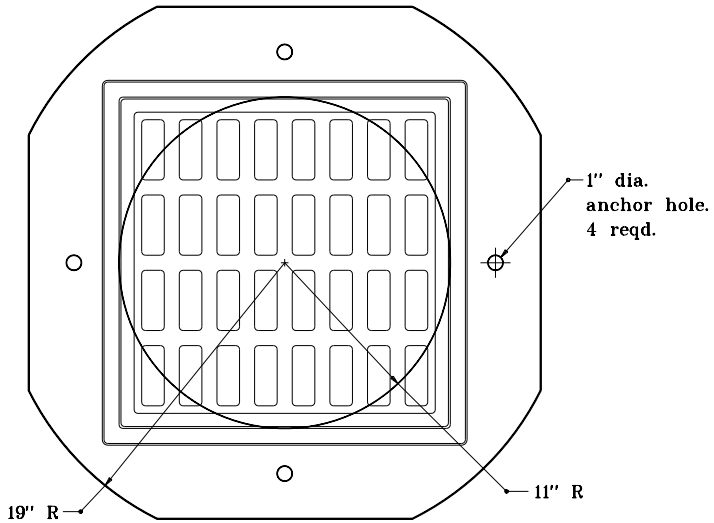

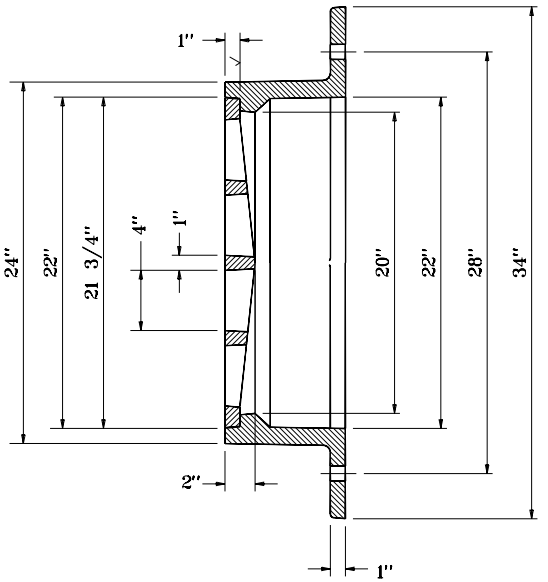

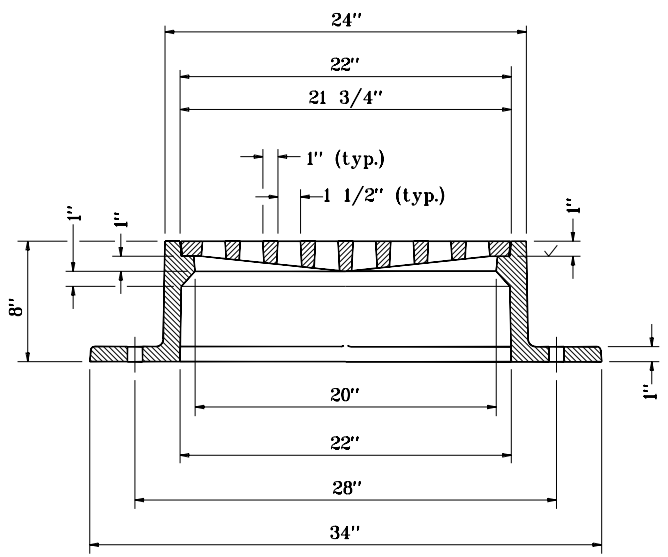

INDIANA DEPARTMENT OF TRANSPORTATION

FLAT TOP GRATE CASTING
TYPE 2

SEPTEMBER 1998

STANDARD DRAWING NO. **E 720-MHCA-01**

ANTHONY L. UREMOVICH REGISTERED No. 18095 STATE OF INDIANA PROFESSIONAL ENGINEER

DESIGN STANDARDS ENGINEER

DETAILS PLACED IN THIS FORMAT 11-15-99

/s/ Anthony L. Uremovich 11-15-99
DESIGN STANDARDS ENGINEER DATE

/s/ Firooz Zandi 11-15-99
CHIEF HIGHWAY ENGINEER DATE

ORIGINALLY APPROVED 9-01-98

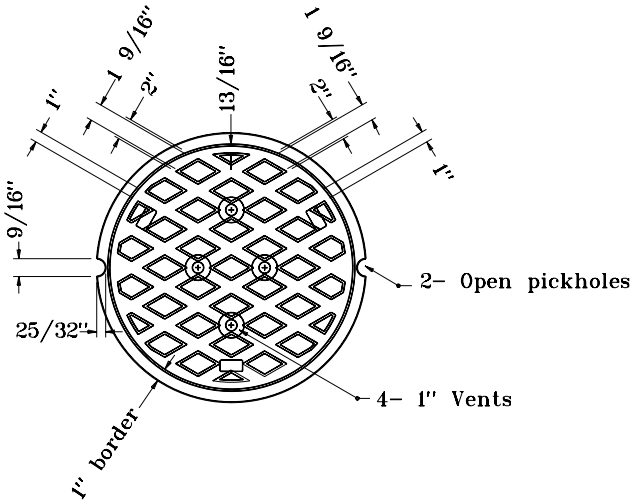

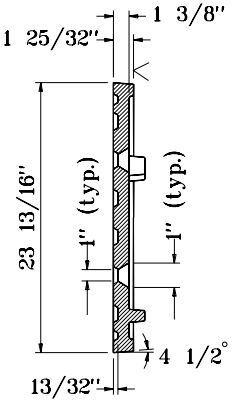

1" dia. anchor bolt holes on a 29 1/8" dia. b.c. 4 reqd.

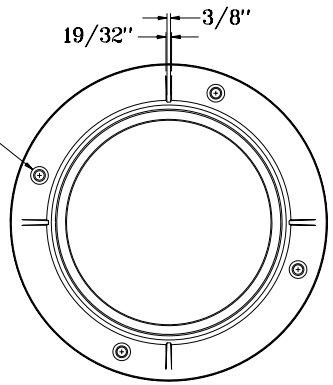

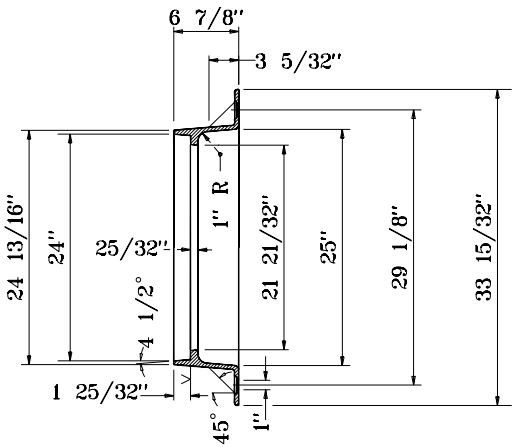

INDIANA DEPARTMENT OF TRANSPORTATION

MANHOLE CASTING
TYPE 4 RING AND COVER

SEPTEMBER 1998

STANDARD DRAWING NO **E 720-MHCA-02**

ANTHONY L. UREMOVICH REGISTERED No. 18095 STATE OF INDIANA PROFESSIONAL ENGINEER

DESIGN STANDARDS ENGINEER

DETAILS PLACED IN THIS FORMAT	11-15-99
/s/ Anthony L. Uremovich	11-15-99
DESIGN STANDARDS ENGINEER	DATE
/s/ Firooz Zandi	11-15-99
CHIEF HIGHWAY ENGINEER	DATE
ORIGINALLY APPROVED	9-01-98

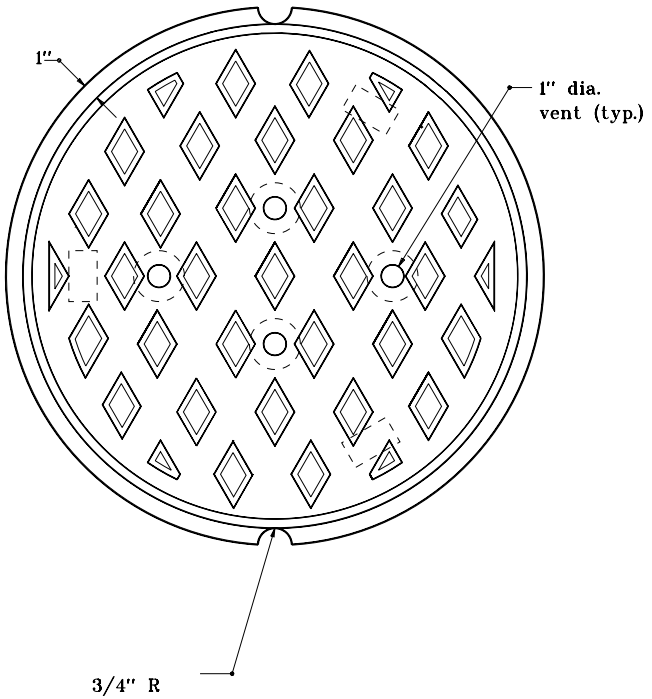

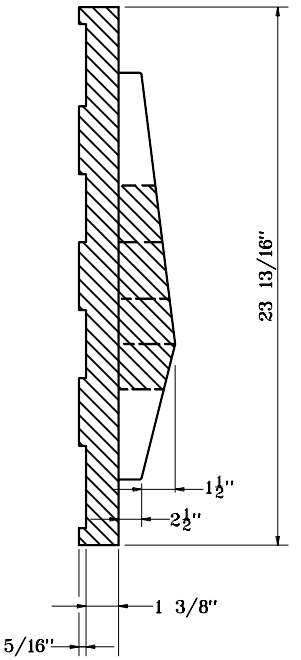

INDIANA DEPARTMENT OF TRANSPORTATION

MANHOLE CASTING TYPE 4 ALTERNATE COVER

SEPTEMBER 1998

STANDARD DRAWING NO. **E 720-MHCA-03**

ANTHONY L. UREMOVICH REGISTERED No. 18095 STATE OF INDIANA PROFESSIONAL ENGINEER

DESIGN STANDARDS ENGINEER

DETAILS PLACED IN THIS FORMAT	11-15-99
/s/ Anthony L. Uremovich	11-15-99
DESIGN STANDARDS ENGINEER	DATE
/s/ Firooz Zandi	11-15-99
CHIEF HIGHWAY ENGINEER	DATE
ORIGINALLY APPROVED	9-01-98

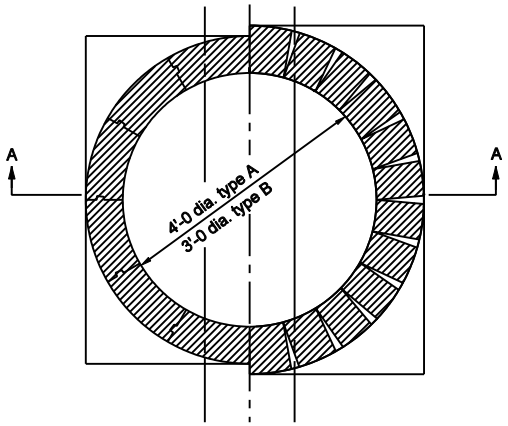

SECTION B-B

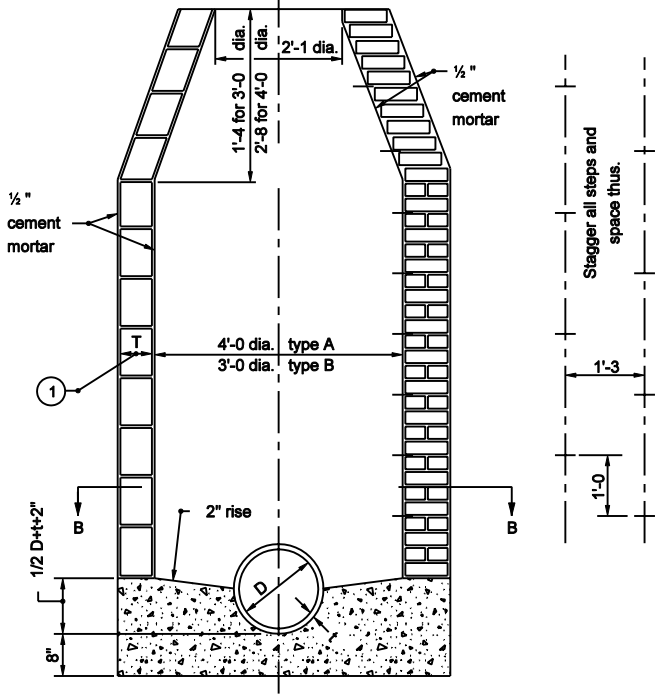

SECTION A-A

TYPE A
Dia. = 4'-0"

TYPE B
Dia. = 3'-0

NOTES

(1) T = 8" for brick structure
T = 6" for segmental block structure

INDIANA DEPARTMENT OF TRANSPORTATION

MANHOLES TYPE A AND B

SEPTEMBER 2003

STANDARD DRAWING NO. E 720-MHST-01

RICHARD L. VanCLEAVE REGISTERED No. 9750 STATE OF INDIANA PROFESSIONAL ENGINEER

DESIGN STANDARDS ENGINEER

/s/ Richard L. VanCleave 9-02-03
DESIGN STANDARDS ENGINEER DATE

/s/ Richard K. Smutzer 9-02-03
CHIEF HIGHWAY ENGINEER DATE

GENERAL NOTES

(1) For eccentric and concentric cone heights see cone heights table on Standard Drawing E 720-MHST-08.

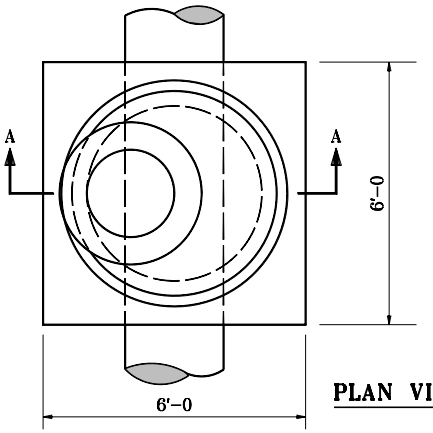

PLAN VIEW

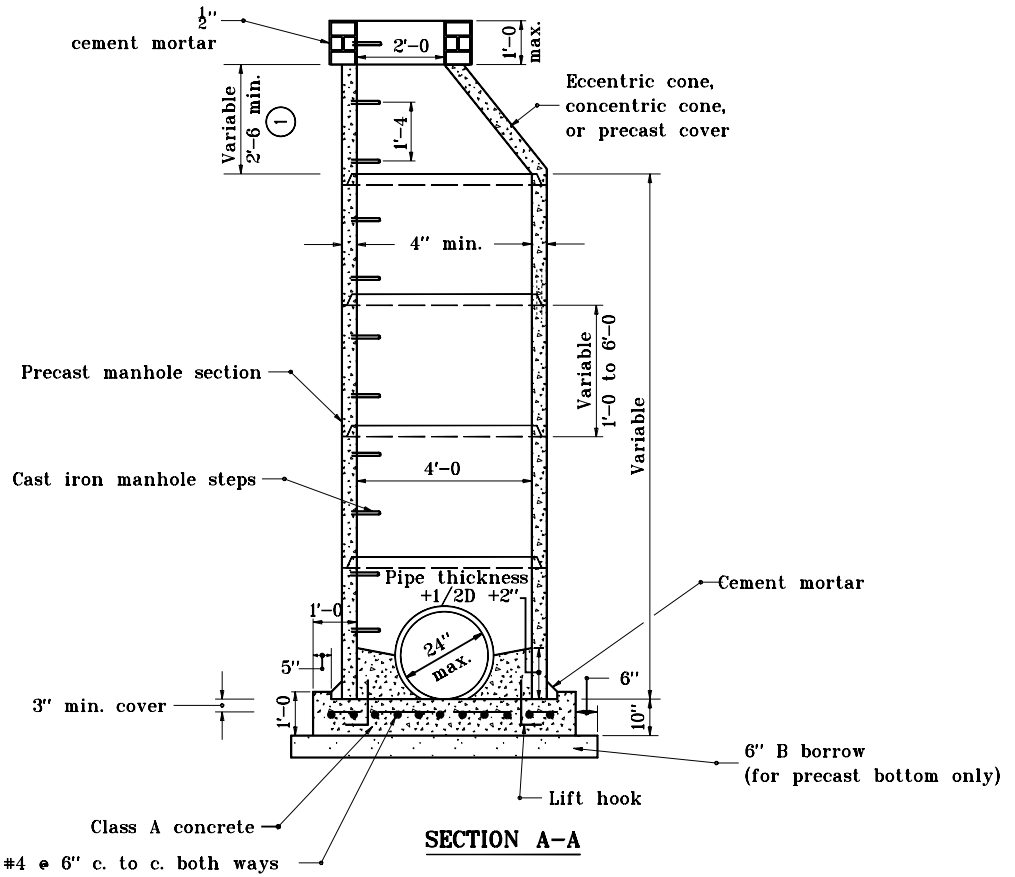

SECTION A-A

INDIANA DEPARTMENT OF TRANSPORTATION

MANHOLE TYPE C

SEPTEMBER 1997

STANDARD DRAWING NO. E 720-MHST-02

ANTHONY L. UREMOVICH REGISTERED No. 18095 STATE OF INDIANA PROFESSIONAL ENGINEER

DESIGN STANDARDS ENGINEER

DETAILS PLACED IN THIS FORMAT	11-15-99
/s/ Anthony L. Uremovich DESIGN STANDARDS ENGINEER	11-15-99 DATE
/s/ Firooz Zandi CHIEF HIGHWAY ENGINEER	11-15-99 DATE
ORIGINALLY APPROVED	9-02-97

NOTES

1. Drop pipe may be used with manhole type D, E, F, or G. Such manhole shall be referred to as drop manhole type D, E, F, or G.

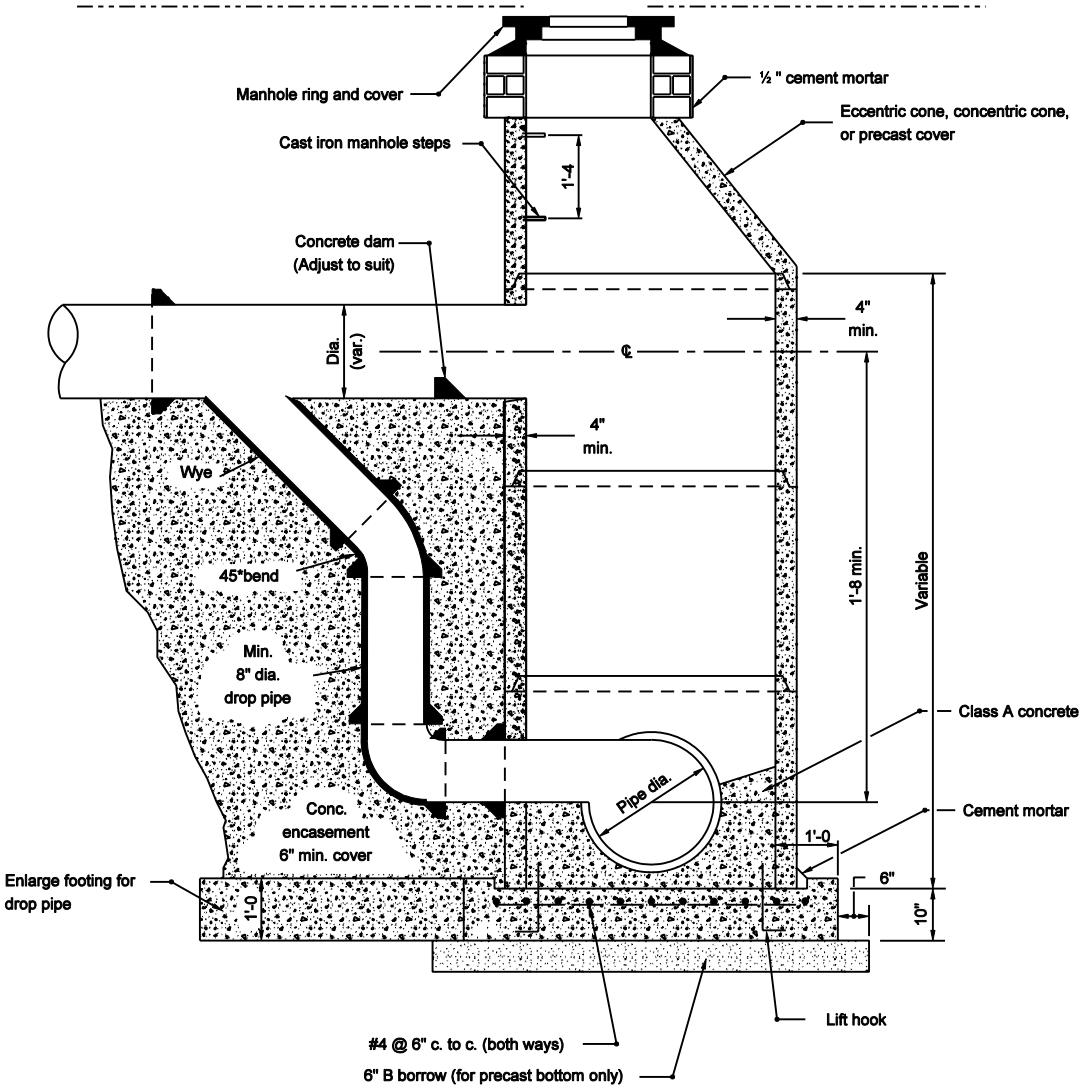

SECTION

INDIANA DEPARTMENT OF TRANSPORTATION

DROP MANHOLE TYPE C

SEPTEMBER 2003

STANDARD DRAWING NO. E 720-MHST-03

RICHARD L. VanCLEAVE REGISTERED No. 9750 STATE OF INDIANA PROFESSIONAL ENGINEER

DESIGN STANDARDS ENGINEER

/s/ Richard L. VanCleave 9-02-03
DESIGN STANDARDS ENGINEER DATE

/s/ Richard K. Smutzer 9-02-03
CHIEF HIGHWAY ENGINEER DATE

MANHOLE DIMENSIONS		
TYPE	A-1 PIPE SIZE DIA. (in)	B AND D
D	27 to 42	4'-9
E	48 to 60	6'-6
F	66 to 84	8'-10
G	90 to 108	11'-2

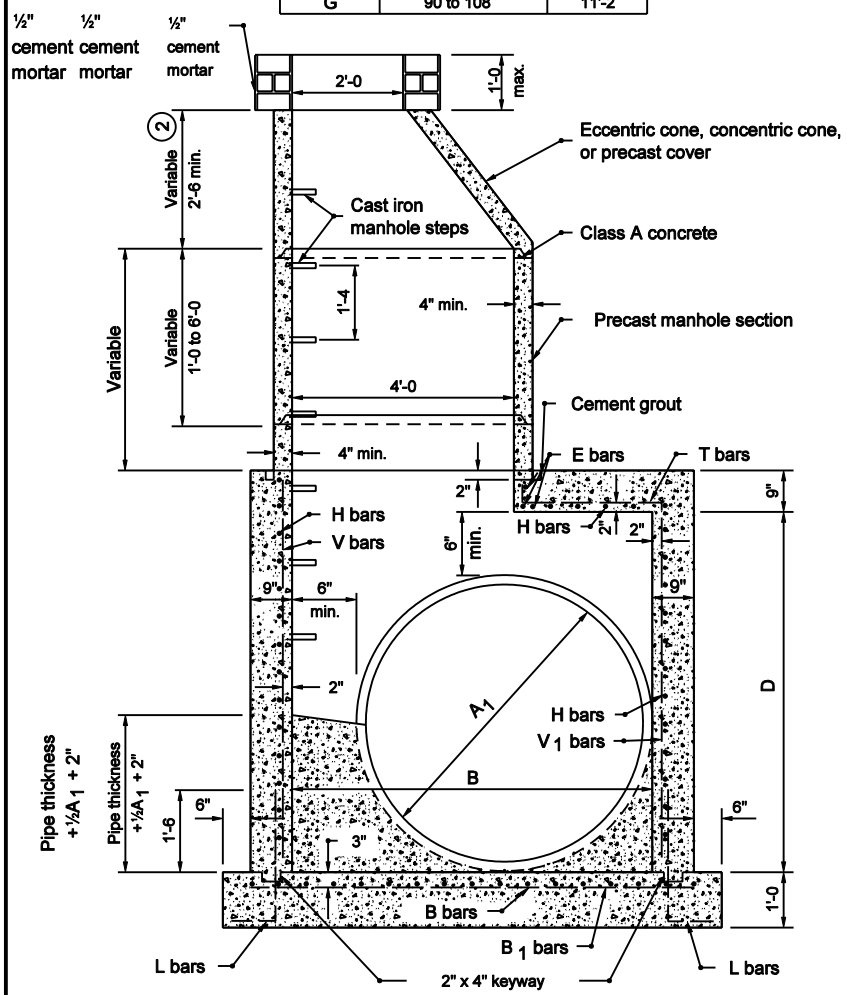

SECTION A-A

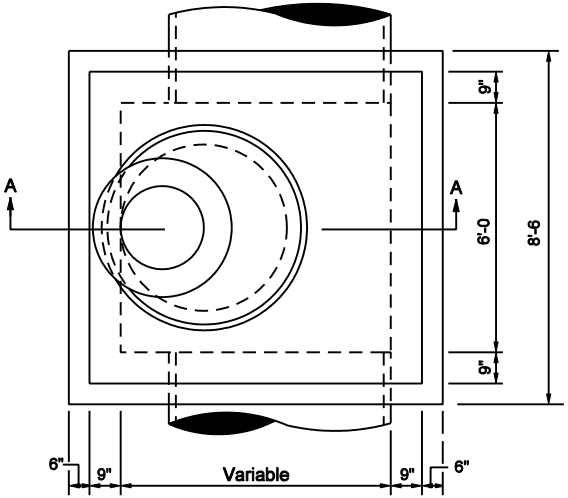

PLAN VIEW

NOTES

1. Manhole type H, J, K, L, M, or N, may be substituted for manhole type C, D, E, or F for comparable pipe sizes. See Standard Drawing E 720-MHST-05 for manholes type H, J, K, L, M, and N details.

(2) For eccentric and concentric cone heights see Cone Heights Table on Standard Drawing 720-MHST-08.

3. See Standard Drawing 720-MHST-10 for Reinforcing Steel for Manholes table.

INDIANA DEPARTMENT OF TRANSPORTATION

MANHOLES TYPE D, E, F, AND G

SEPTEMBER 2003

STANDARD DRAWING NO. E 720-MHST-04

RICHARD L. VANCLEAVE REGISTERED No. 9750 STATE OF INDIANA PROFESSIONAL ENGINEER

DESIGN STANDARDS ENGINEER

/s/ Richard L. VanCleave 9-02-03
DESIGN STANDARDS ENGINEER DATE

/s/ Richard K. Smutzer 9-02-03
CHIEF HIGHWAY ENGINEER DATE

MANHOLE PIPE SIZES				
Type	G (in.)	F (ft. in.)	Maximum Pipe Size Rt. ∠ to Mainline (in.)	Maximum Pipe Size for Mainline (in.)
H	24 to 36	——	30	36
J	24 to 36	5'-0	30	36
K	36 to 48	6'-0	36	48
L	48 to 54	8'-0	48	54
M	54 to 72	8'-6	66	72
N	72 to 84	9'-0	72	84

NOTES

1. Drop pipe may be used with manholes Type H, J, K, L, M, or N. Such manhole shall be referred to as drop manholes type H, J, K, L, M, or N. For details of construction see Standard Drawing E 720-MHST-03.
2. See Standard Drawing E 720-MHST-06 for Details A, B, and C.
3. Manholes type C, D, E, or F. may be substituted for manholes type H, J, K, L, M, or N. for comparable pipe sizes. See Standard Drawings E 720-MHST-02 and -04 for manholes type D, E, F, and G details..

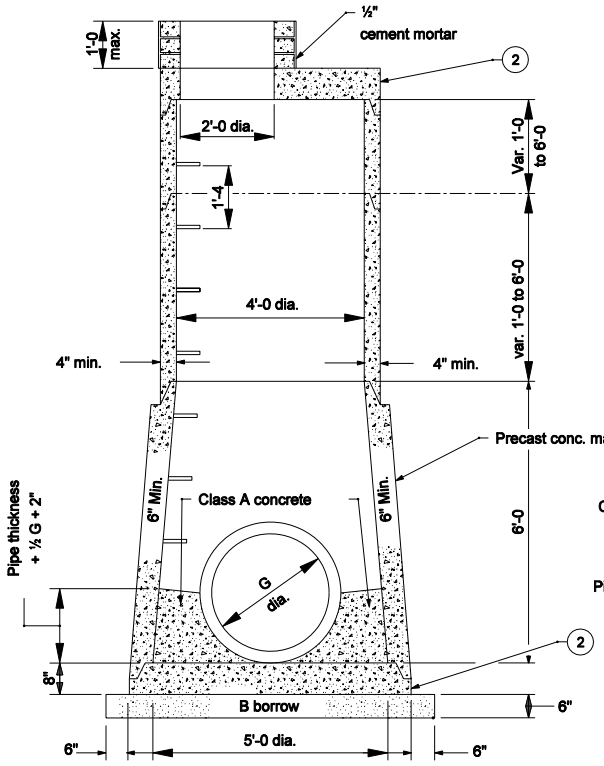

MANHOLE TYPE H

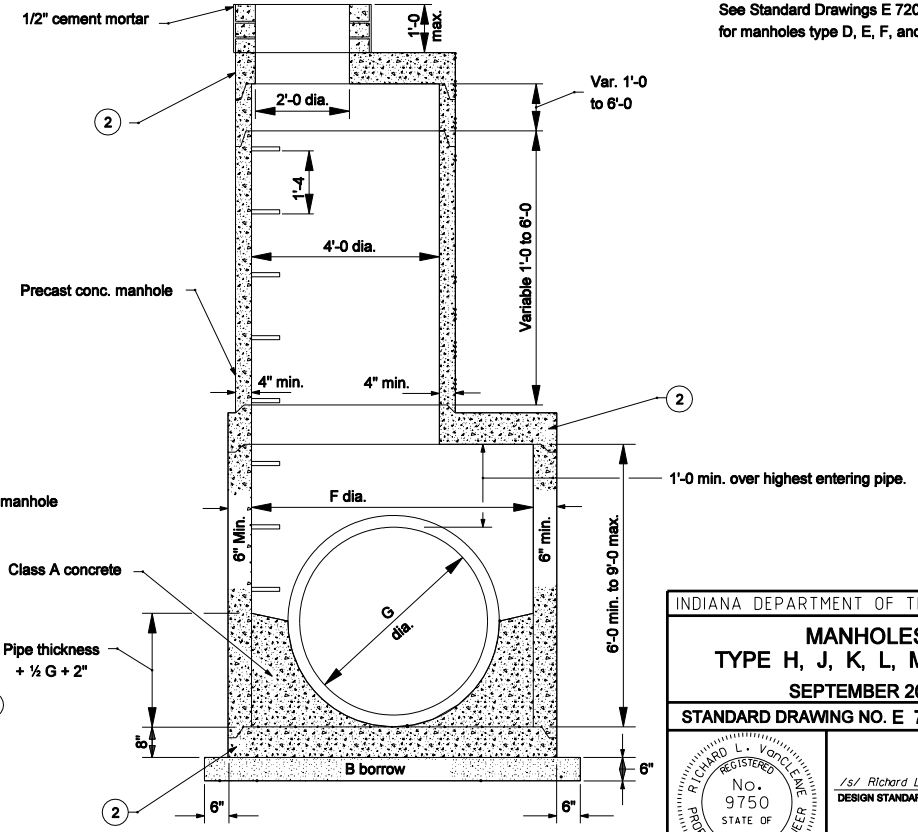

MANHOLE TYPE J,K,L,M & N

INDIANA DEPARTMENT OF TRANSPORTATION

MANHOLES TYPE H, J, K, L, M, AND N

SEPTEMBER 2006

STANDARD DRAWING NO. E 720-MHST-05

RICHARD L. VanCLEAVE REGISTERED No. 9750 STATE OF INDIANA PROFESSIONAL ENGINEER

DESIGN STANDARDS ENGINEER

/s/ Richard L. VanCleave 9-01-06
DESIGN STANDARDS ENGINEER DATE

/s/ Richard K. Smutzer 9-01-06
CHIEF HIGHWAY ENGINEER DATE

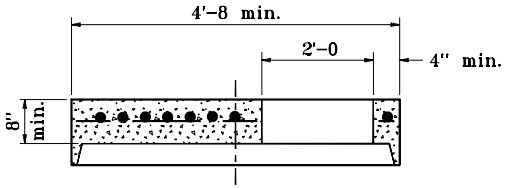

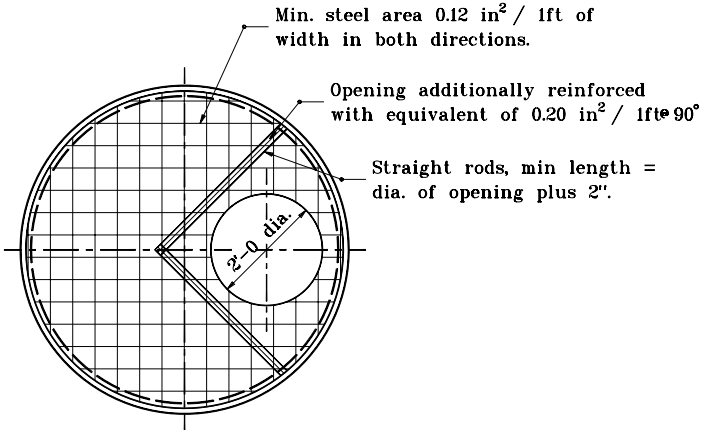

DETAIL A

COVER CAP FOR PRECAST CONCRETE MANHOLE SECTION

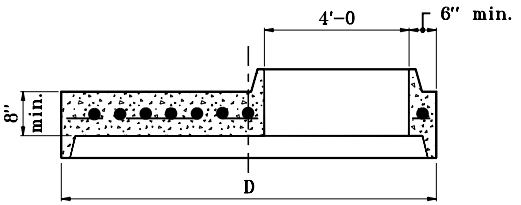

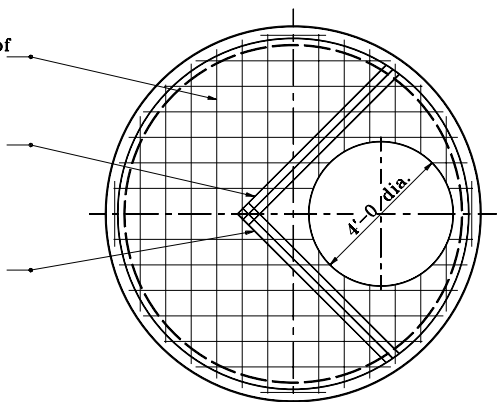

Section Dia.	D
5'-0	6'-0
6'-0	7'-2
8'-0	9'-6
8'-6	10'-0
9'-0	10'-8

DETAIL B

REDUCER CAP FOR PRECAST MANHOLE SECTION (5'-0 to 9'-0 DIA.)

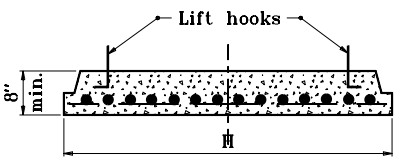

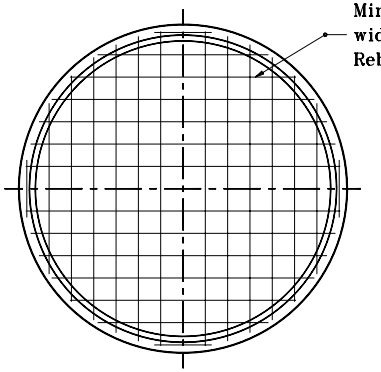

Section Dia.	H
5'-0	6'-0
6'-0	7'-2
8'-0	9'-6
8'-6	10'-0
9'-0	10'-8

DETAIL C

BASE FOR PRECAST CONCRETE MANHOLE SECTIONS (5'-0 to 9'-0 DIA.)

INDIANA DEPARTMENT OF TRANSPORTATION

PRECAST CONCRETE MANHOLE SECTIONS

APRIL 1995

STANDARD DRAWING NO. **E 720-MHST-06**

ANTHONY L. UREMOVICH REGISTERED No. 18095 STATE OF INDIANA PROFESSIONAL ENGINEER

DESIGN STANDARDS ENGINEER

DETAILS PLACED IN THIS FORMAT	11-15-99
/s/ Anthony L. Uremovich, DESIGN STANDARDS ENGINEER	11-15-99
/s/ Firooz Zandi, CHIEF HIGHWAY ENGINEER	11-15-99
ORIGINALLY APPROVED	4-03-95

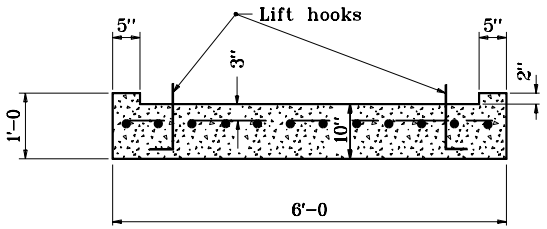

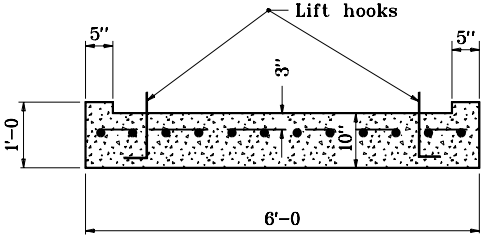

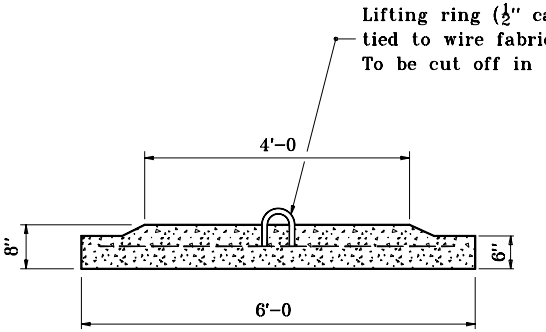

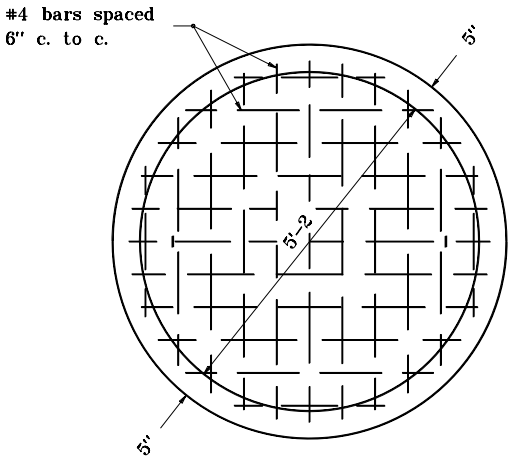

ROUND

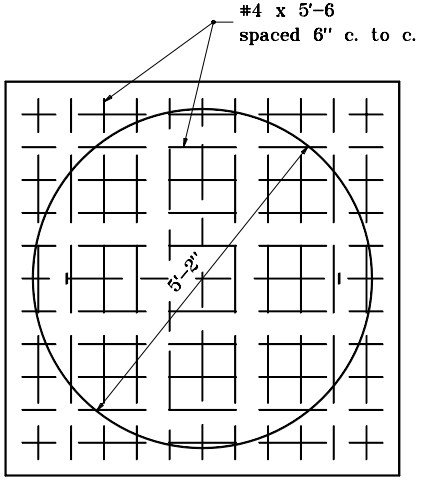

SQUARE

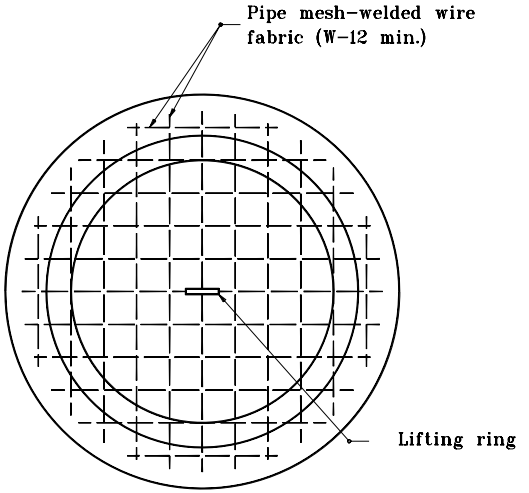

ROUND ALTERNATE

INDIANA DEPARTMENT OF TRANSPORTATION

PRECAST MANHOLE BOTTOM SECTION

SEPTEMBER 1997

STANDARD DRAWING NO. **E 720-MHST-07**

ANTHONY L. URENOVICH REGISTERED No. 18095 STATE OF INDIANA PROFESSIONAL ENGINEER

DESIGN STANDARDS ENGINEER

DETAILS PLACED IN THIS FORMAT	11-15-99
/s/ Anthony L. Uremovich DESIGN STANDARDS ENGINEER	11-15-99 DATE
/s/ Firooz Zandi CHIEF HIGHWAY ENGINEER	11-15-99 DATE
ORIGINALLY APPROVED	9-01-97

NOTES

1. The concentric concrete section will not be permitted for manholes which are under the jurisdiction of the Indianapolis Sanitary District.

CONE HEIGHTS	
ECCENTRIC	CONCENTRIC
2'-6	2'-6
3'-0	3'-0
3'-2	3'-2
3'-6	4'-0

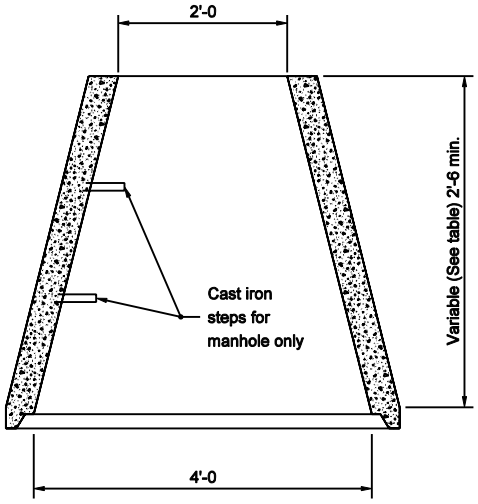

CONCENTRIC CONE

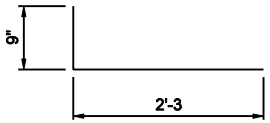

L BARS

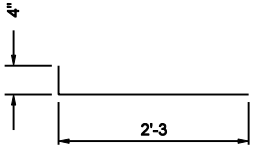

T BARS

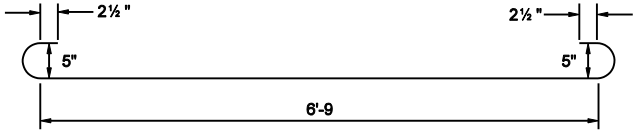

H BARS

INDIANA DEPARTMENT OF TRANSPORTATION

MANHOLE BARS AND CONECNTRIC CONE

SEPTEMBER 2003

STANDARD DRAWING NO. E 720-MHST-08

RICHARD L. VanCLEAVE REGISTERED No. 9750 STATE OF INDIANA PROFESSIONAL ENGINEER

DESIGN STANDARDS ENGINEER

/s/ Richard L. VanCleave 9-02-03
DESIGN STANDARDS ENGINEER DATE

/s/ Richard K. Smutzer 9-02-03
CHIEF HIGHWAY ENGINEER DATE

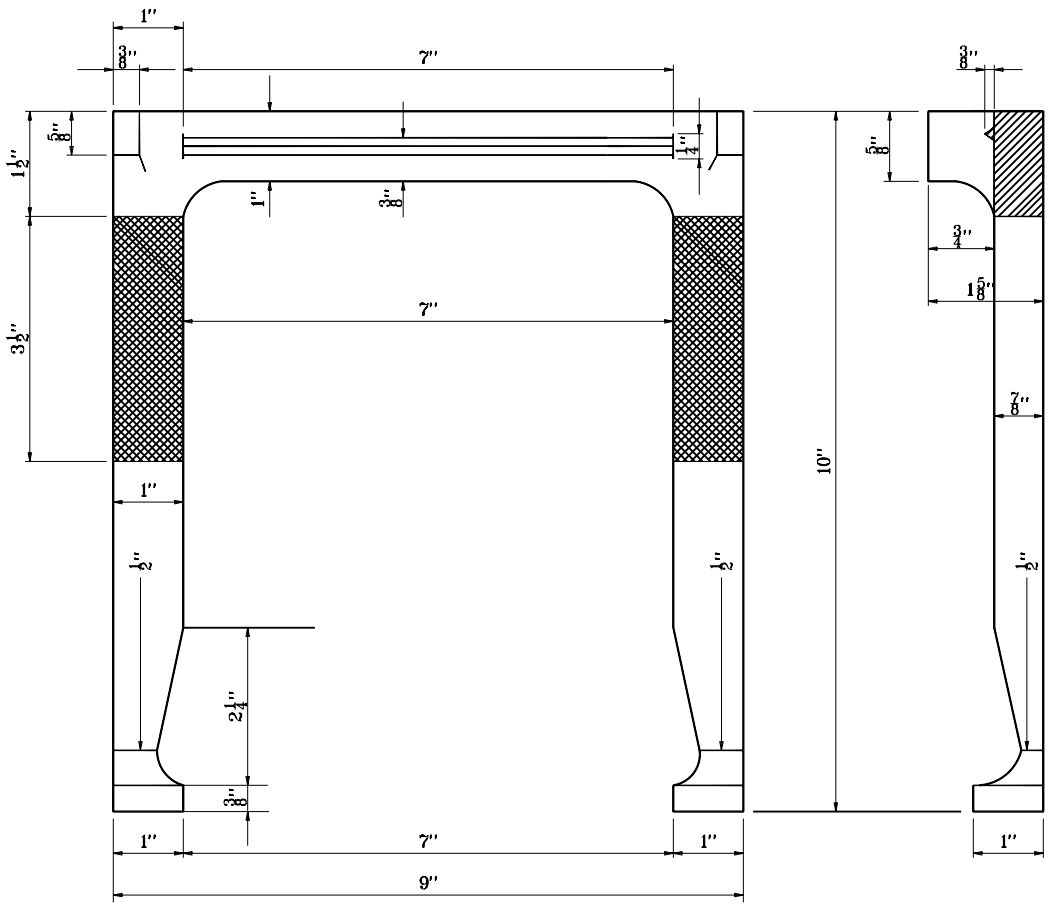

INDIANA DEPARTMENT OF TRANSPORTATION

MANHOLE STEP

APRIL 1995

STANDARD DRAWING NO. **E 720-MHST-09**

ANTHONY L. UREMOVICH REGISTERED No. 18095 STATE OF INDIANA PROFESSIONAL ENGINEER

DESIGN STANDARDS ENGINEER

DETAILS PLACED IN THIS FORMAT	11-15-99
/s/ Anthony L. Uremovich	11-15-99
DESIGN STANDARDS ENGINEER	DATE
/s/ Firooz Zandi	11-15-99
CHIEF HIGHWAY ENGINEER	DATE
ORIGINALLY APPROVED	4-03-95

REINFORCING STEEL FOR MANHOLES																
	Manhole Type D				Manhole Type E				Manhole Type F				Manhole Type G			
Bars	Length	No.	Spa.	Size	Length	No.	Spa.	Size	Length	No.	Spa.	Size	Length	No.	Spa.	Size
B	8'–0	10	9''	#5	8'–0	12	9''	#5	8'–0	16	9''	#5	8'–0	19	9''	#5
B_1	6'–9	12	9''	#5	8'–6	12	9''	#5	11'–0	12	9''	#5	13'–3	12	9''	#5
E	7'–3	3	2''	#5	7'–3	3	2''	#5	7'–3	3	2''	#5	7'–3	3	2''	#5
H	8'–6	22	6''	#5	8'–6	33	6''	#5	8'–6	41	6''	#5	8'–6	58	6''	#5
L	3'–0	16	12''	#5	3'–0	16	12''	#5	3'–0	16	12''	#5	3'–0	16	12''	#5
T	1'–3	16	6''	#5	3'–0	16	6''	#5	5'–3	16	6''	#5	7'–6	16	6''	#5
V	5'–0	16	6''	#5	6'–9	16	6''	#5	9'–0	16	6''	#5	11'–6	16	6''	#5
V_1	4'–9	16	6''	#5	6'–6	16	6''	#5	8'–9	16	6''	#5	11'–3	16	6''	#5

INDIANA DEPARTMENT OF TRANSPORTATION

TABLE OF REINFORCING STEEL FOR MANHOLES

SEPTEMBER 1997

STANDARD DRAWING NO. **E 720–MHST–10**

ANTHONY L. UREMOVICH REGISTERED No. 18095 STATE OF INDIANA PROFESSIONAL ENGINEER

DESIGN STANDARDS ENGINEER

DETAILS PLACED IN THIS FORMAT 11-15-99

/s/ Anthony L. Uremovich 11-15-99
DESIGN STANDARDS ENGINEER DATE

/s/ Firooz Zandi 11-15-99
CHIEF HIGHWAY ENGINEER DATE

ORIGINALLY APPROVED 9-02-97

GENERAL NOTES

① See Standard Drawing E 720-SDCP-02 for casting details.

② See Standard Drawing E 720-SDCP-03 for casting details.

③ ⅜" x 1½" stainless steel nonthreaded hex head bolt with locknut washer. (typ.)

④ Class A concrete, 6" min. thick. (typ.)

5. Cleanout ports shall be spaced at 250 ft or as shown on plans.

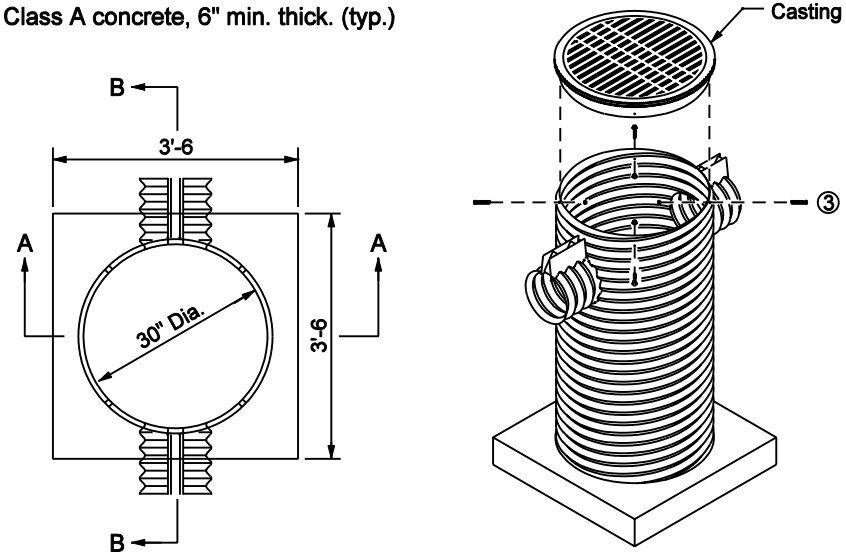

PLAN

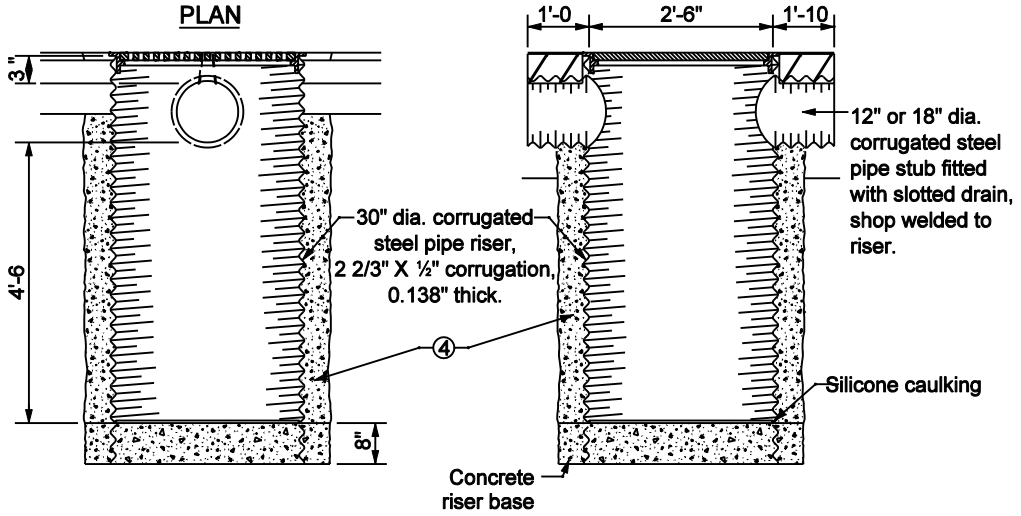

TYPE I
STEEL PIPE PORT

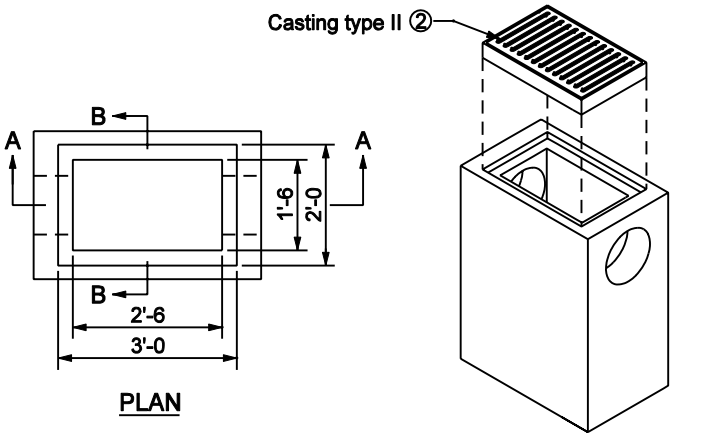

PLAN

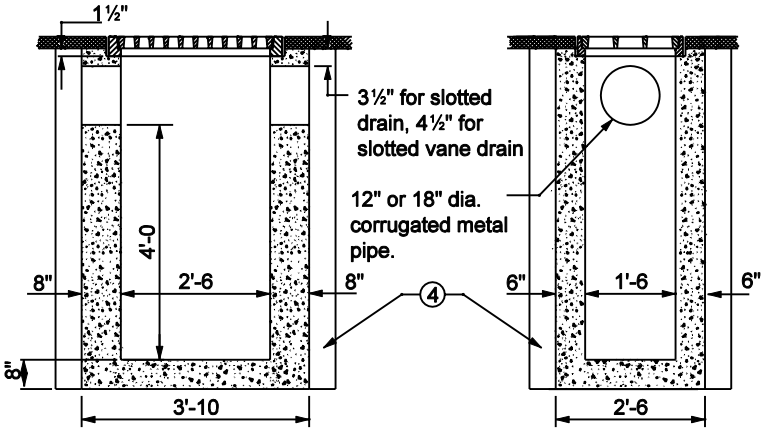

SECTION A-A

SECTION B-B

TYPE II
CONCRETE BOX PORT

INDIANA DEPARTMENT OF TRANSPORTATION

SLOTTED DRAIN PIPE CLEANOUT PORT

MARCH 2003

STANDARD DRAWING NO. E 720-SDCP-01

RICHARD L. VanCLEAVE REGISTERED No. 9750 STATE OF INDIANA PROFESSIONAL ENGINEER

DESIGN STANDARDS ENGINEER

/s/ Richard L. VanCleave 3-03-03
DESIGN STANDARDS ENGINEER DATE

/s/ Richard K. Smutzer 3-03-03
CHIEF HIGHWAY ENGINEER DATE

GENERAL NOTES

1. Casting total weight 235 lbs.
2. Casting finish: no paint.

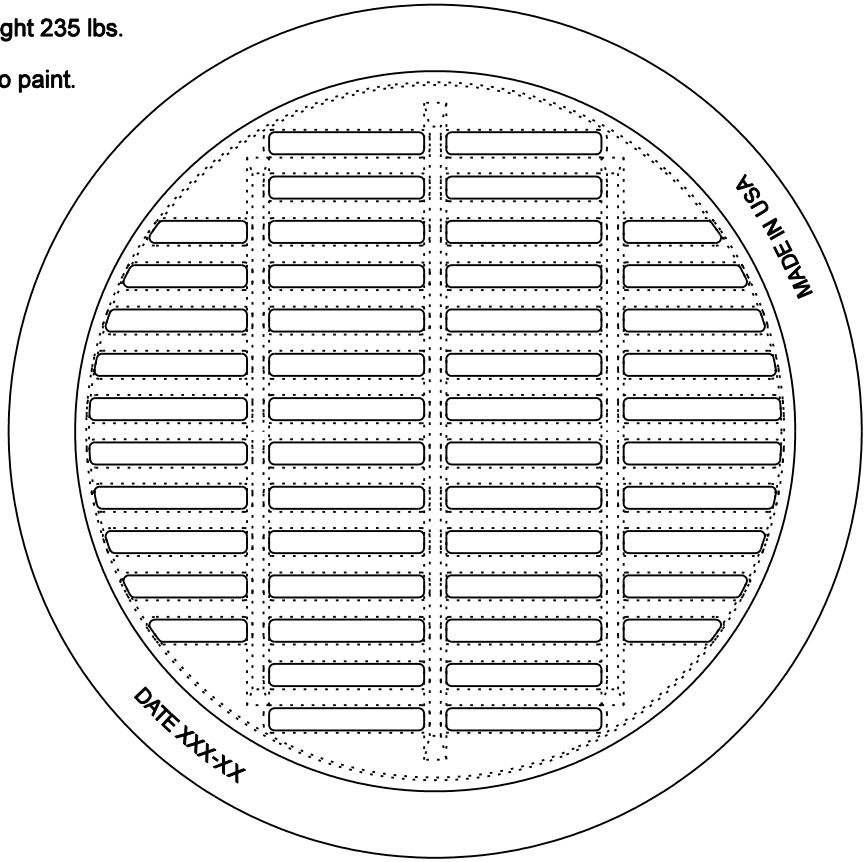

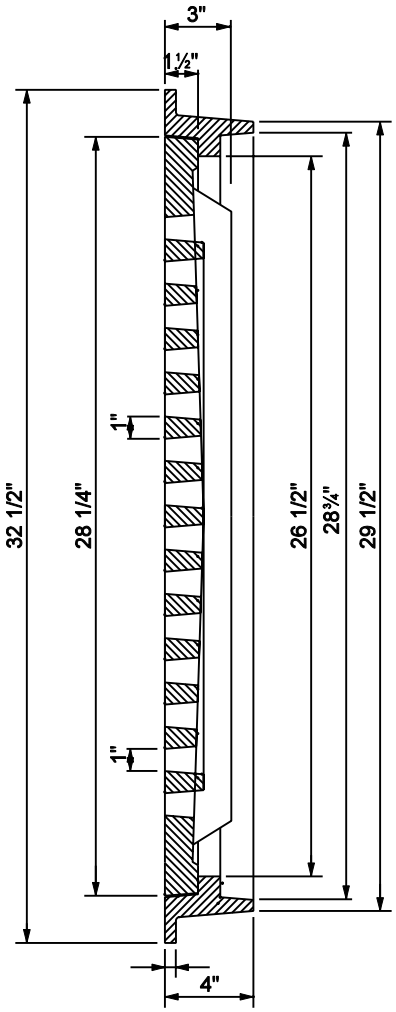

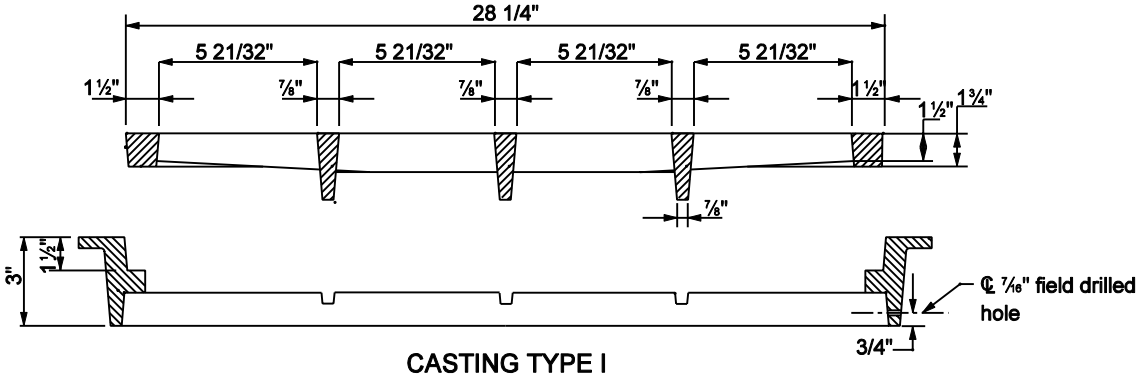

CASTING TYPE I

INDIANA DEPARTMENT OF TRANSPORTATION

CASTING TYPE I FRAME AND GRATE

MARCH 2003

STANDARD DRAWING NO. E 720-SDCP-02

RICHARD L. VanCLEAVE REGISTERED No. 9750 STATE OF INDIANA PROFESSIONAL ENGINEER

DESIGN STANDARDS ENGINEER

/s/ Richard L. VanCleave 3-03-03
DESIGN STANDARDS ENGINEER DATE

/s/ Richard K. Smutzer 3-03-03
CHIEF HIGHWAY ENGINEER DATE

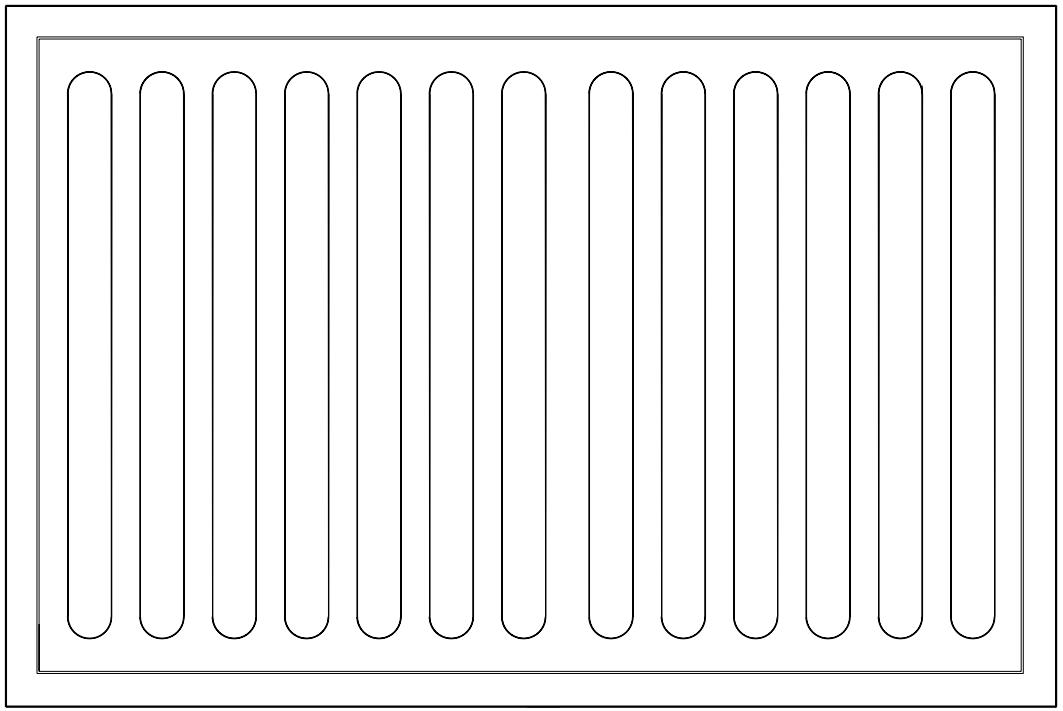

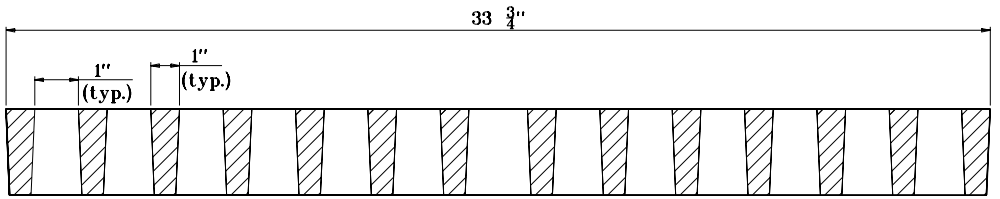

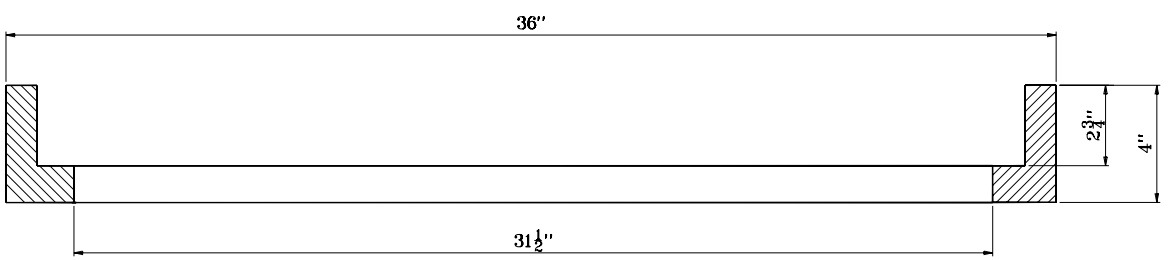

CASTING TYPE II

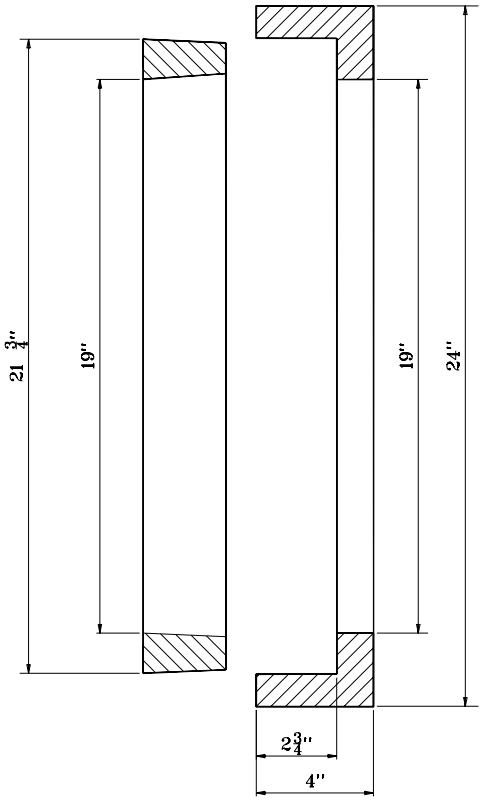

GENERAL NOTES

1. Casting total weight 440 lb.

2. Casting finish: no paint.

INDIANA DEPARTMENT OF TRANSPORTATION

CASTING TYPE II
FRAME AND GRATE

JANUARY 1999

STANDARD DRAWING NO. E 720-SDCP-03

ANTHONY L. UREMOVICH REGISTERED No. 18095 STATE OF INDIANA PROFESSIONAL ENGINEER

DESIGN STANDARDS ENGINEER

DETAILS PLACED IN THIS FORMAT	11-15-99
/s/ Anthony L. Uremovich	11-15-99
DESIGN STANDARDS ENGINEER	DATE
/s/ Firooz Zandi	11-15-99
CHIEF HIGHWAY ENGINEER	DATE
ORIGINALLY APPROVED	1-04-99

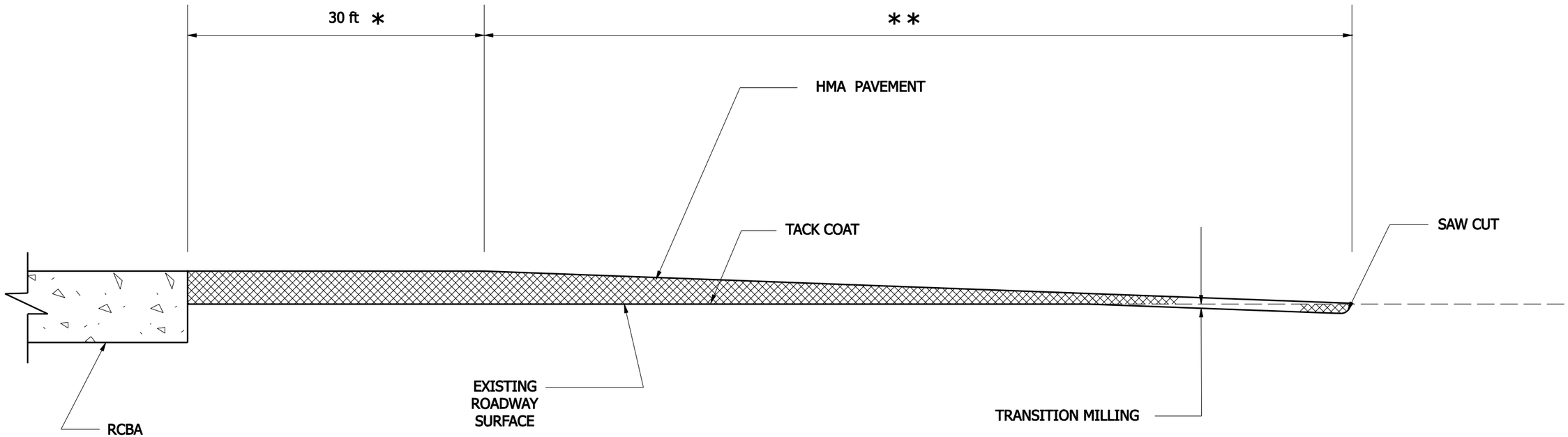

* WEDGE TO BE A CONTINUATION OF BRIDGE DECK PROFILE.

* * WEDGE AND TRANSITION MILLING LIMITS PER STANDARD DRAWING E 306-TMPT-01.

INDIANA DEPARTMENT OF TRANSPORTATION

HMA PAVEMENT WEDGE AT RCBA

SEPTEMBER 2007

STANDARD DRAWING NO. E 722-HMAW-01

RICHARD L. VanCLEAVE REGISTERED No. 9750 STATE OF INDIANA PROFESSIONAL ENGINEER

DESIGN STANDARDS ENGINEER

/s/ Richard L. VanCleave 09/04/07

DESIGN STANDARDS ENGINEER — DATE

/s/ Mark A. Miller 09/04/07

CHIEF HIGHWAY ENGINEER — DATE

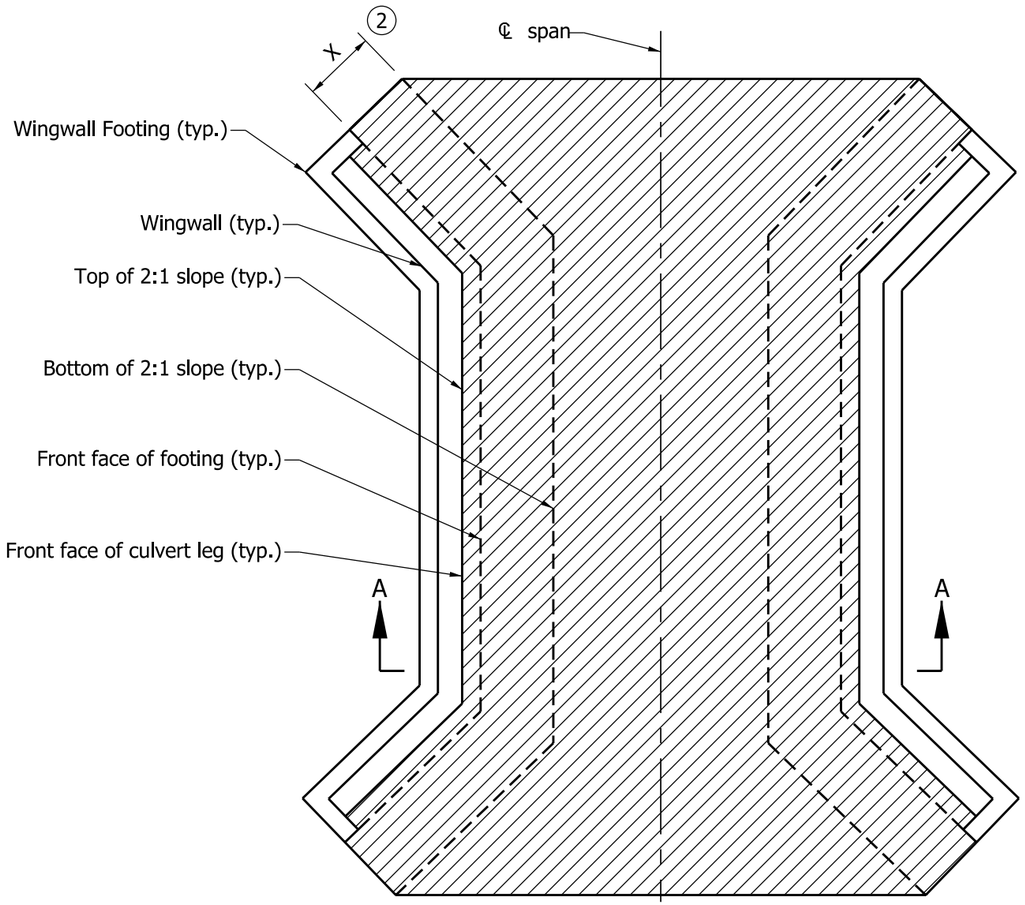

RIPRAP METHOD

PLAN - WITH WINGWALLS

NOTES:

1. See Standard Drawing E 723-CCSP-02 for Section A-A.
2. Distance X is equal to two times the sump depth shown on plans.

LEGEND:

Riprap on geotextiles as shown on the plans.

INDIANA DEPARTMENT OF TRANSPORTATION

THREE-SIDED CONCRETE CULVERT
SCOUR PROTECTION
10'-0" ≤ SPAN WIDTH < 20'-0"

SEPTEMBER 2011

STANDARD DRAWING NO. E 723-CCSP-01

RICHARD L. VanCLEAVE REGISTERED No. 9750 STATE OF INDIANA PROFESSIONAL ENGINEER

DESIGN STANDARDS ENGINEER

/s/ Richard L.VanCleave 09/01/11
DESIGN STANDARDS ENGINEER DATE

/s/ Mark A. Miller 09/01/11
CHIEF HIGHWAY ENGINEER DATE

NOTES:

1. See Standard Drawing E 723-CCSP-01 for plan view of Section A-A.

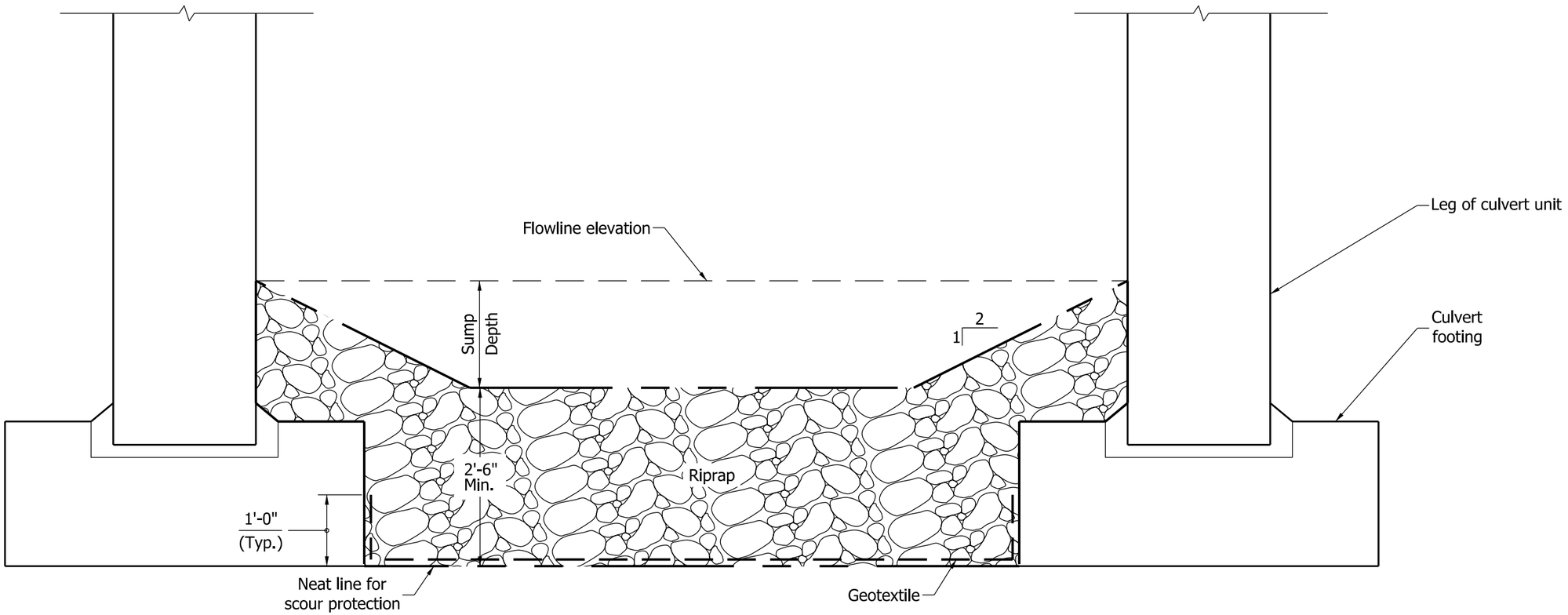

SECTION A-A

RIPRAP METHOD

INDIANA DEPARTMENT OF TRANSPORTATION

THREE-SIDED CONCRETE CULVERT
SCOUR PROTECTION, SECTION,
10'-0" ≤ SPAN WIDTH < 20'-0"

SEPTEMBER 2011

STANDARD DRAWING NO. E 723-CCSP-02

RICHARD L. VanCLEAVE REGISTERED No. 9750 STATE OF INDIANA PROFESSIONAL ENGINEER

DESIGN STANDARDS ENGINEER

/s/ Richard L.VanCleave 09/01/11
DESIGN STANDARDS ENGINEER DATE

/s/ Mark A. Miller 09/01/11
CHIEF HIGHWAY ENGINEER DATE

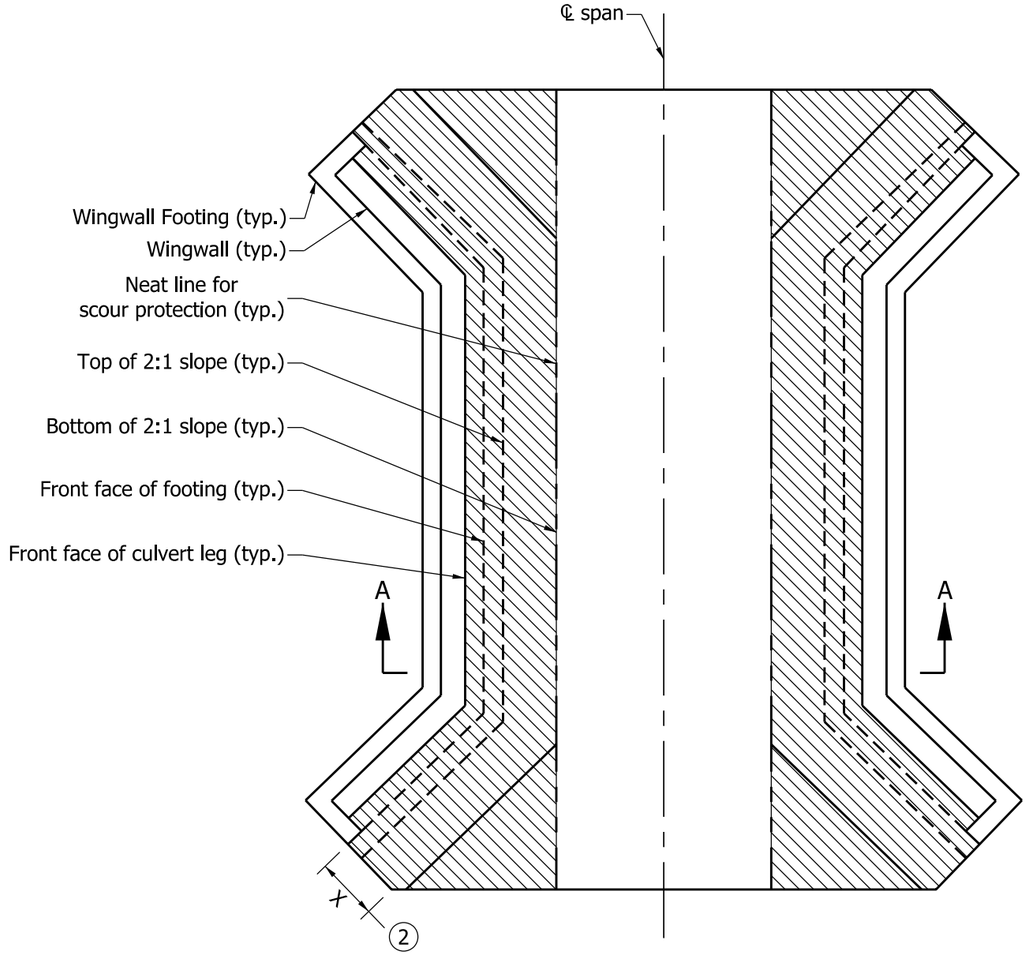

PLAN - WITH WINGWALLS

RIPRAP METHOD

NOTES:

1. See Standard Drawing E723-CCSP-04 for Section A-A.

(2) Distance X is equal to two times the sump depth shown on the plans or 6'-0", whichever is greater.

LEGEND:

Riprap on geotextiles as shown on the plans.

INDIANA DEPARTMENT OF TRANSPORTATION

THREE-SIDED CONCRETE STRUCTURE
SCOUR PROTECTION, PLAN,
SPAN WIDTH ≥ 20'-0"
SEPTEMBER 2011

STANDARD DRAWING NO. E 723-CCSP-03

RICHARD L. VanCLEAVE REGISTERED No. 9750 STATE OF INDIANA PROFESSIONAL ENGINEER

DESIGN STANDARDS ENGINEER

/s/ Richard L.VanCleave 09/01/11
DESIGN STANDARDS ENGINEER DATE

/s/ Mark A. Miller 09/01/11
CHIEF HIGHWAY ENGINEER DATE

NOTES:

1. See Standard Drawing E 723-CCSP-03 for plan view of Section A-A.

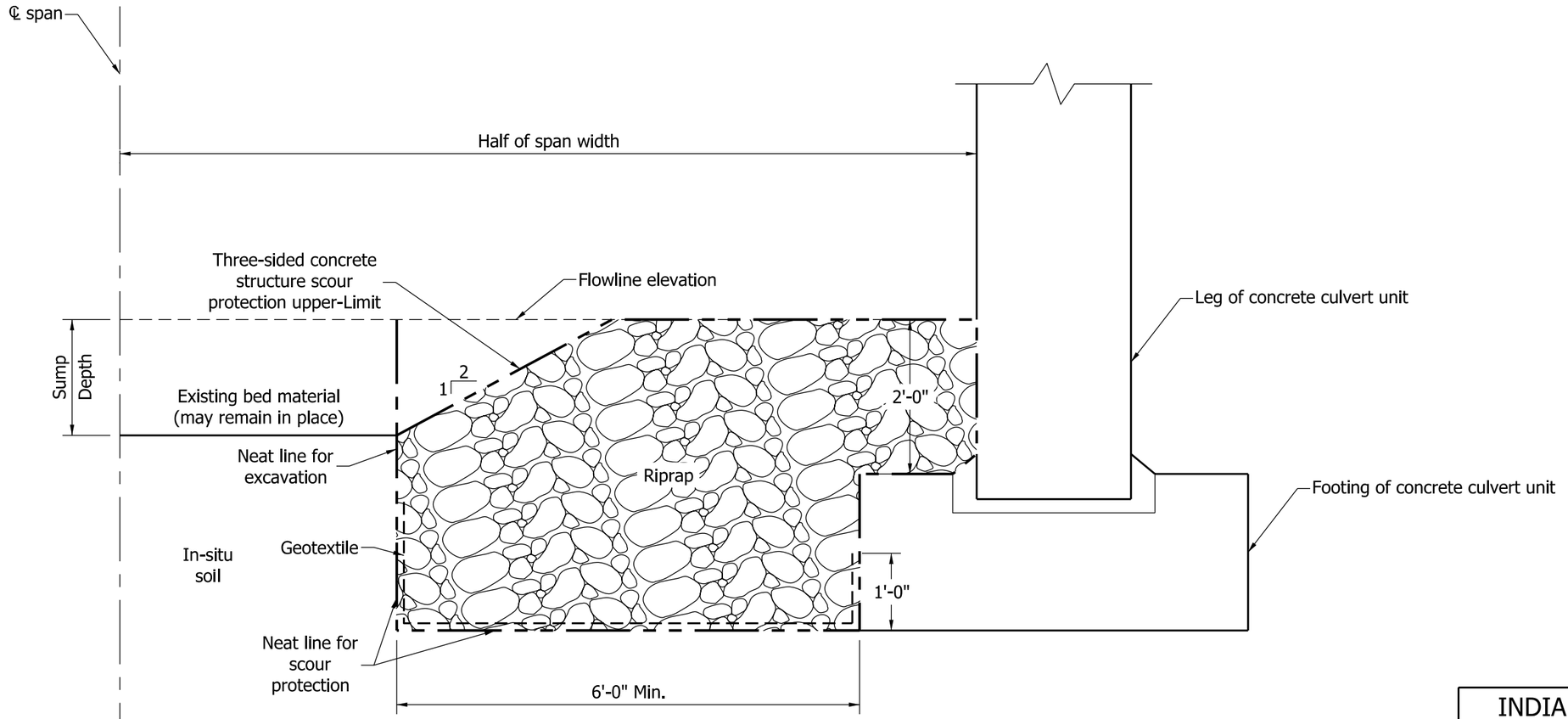

SECTION A-A

RIPRAP METHOD

INDIANA DEPARTMENT OF TRANSPORTATION

THREE-SIDED CONCRETE STRUCTURE
SCOUR PROTECTION, SECTION,
SPAN WIDTH ≥ 20'-0"

SEPTEMBER 2011

STANDARD DRAWING NO. E 723-CCSP-04

RICHARD L. VanCLEAVE REGISTERED No. 9750 STATE OF INDIANA PROFESSIONAL ENGINEER

DESIGN STANDARDS ENGINEER

/s/ Richard L.VanCleave 09/01/11
DESIGN STANDARDS ENGINEER DATE

/s/ Mark A. Miller 09/01/11
CHIEF HIGHWAY ENGINEER DATE

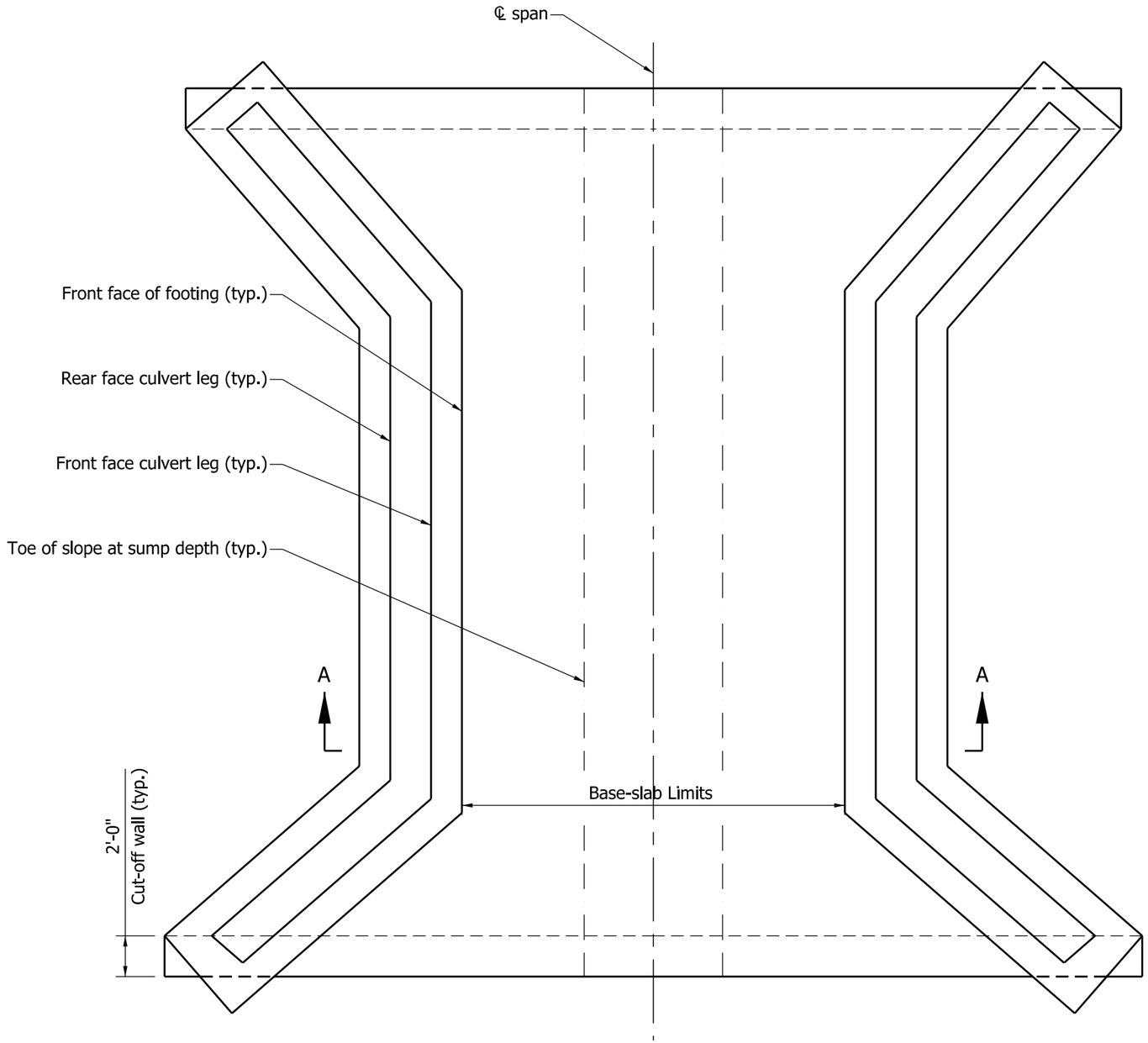

PLAN - WITH WINGWALLS

BASE SLAB METHOD

NOTES:

1. See Standard Drawing E 723-CCSP-06 for Section A-A.

INDIANA DEPARTMENT OF TRANSPORTATION

THREE-SIDED CONCRETE CULVERT
SCOUR PROTECTION, PLAN,
BASE-SLAB METHOD

SEPTEMBER 2011

STANDARD DRAWING NO. E 723-CCSP-05

RICHARD L. VanCLEAVE
REGISTERED
No. 9750
STATE OF INDIANA
PROFESSIONAL ENGINEER

DESIGN STANDARDS ENGINEER

/s/ Richard L.VanCleave 09/01/11
DESIGN STANDARDS ENGINEER DATE

/s/ Mark A. Miller 09/01/11
CHIEF HIGHWAY ENGINEER DATE

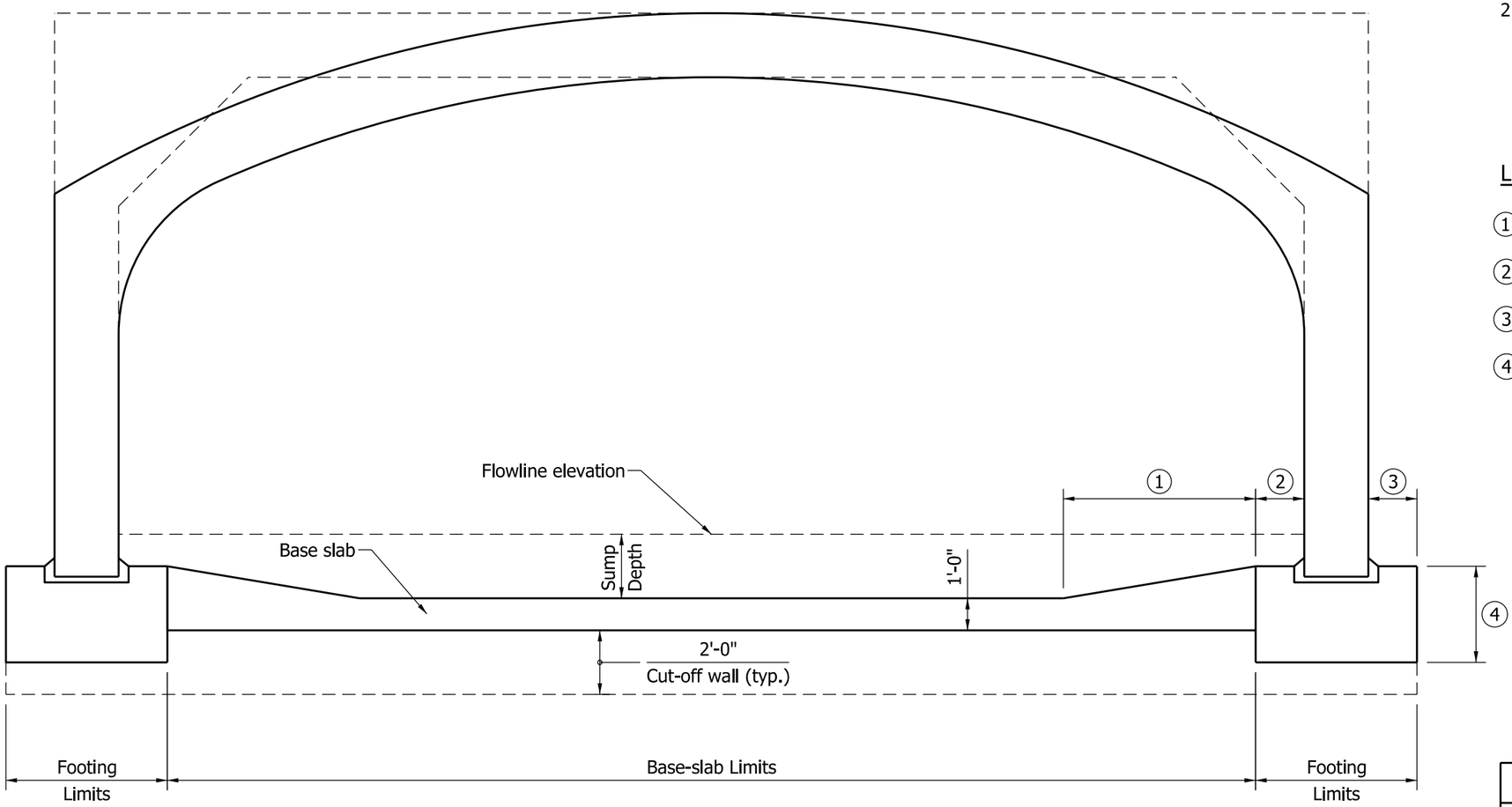

SECTION A-A

BASE SLAB METHOD

NOTES:

1. See the working drawings for dimension (1) through (4).
2. See Standard Drawing E 723-CCSP-05 for plan view of Section A-A

LEGEND:

(1) Taper length

(2) Inside-footing width

(3) Outside-footing width

(4) Footing depth

INDIANA DEPARTMENT OF TRANSPORTATION

THREE-SIDED CONCRETE CULVERT SCOUR PROTECTION, SECTION, BASE-SLAB METHOD

SEPTEMBER 2011

STANDARD DRAWING NO. E 723-CCSP-06

RICHARD L. VanCLEAVE REGISTERED No. 9750 STATE OF INDIANA PROFESSIONAL ENGINEER

DESIGN STANDARDS ENGINEER

/s/ Richard L.VanCleave 09/01/11

DESIGN STANDARDS ENGINEER DATE

/s/ Mark A. Miller 09/01/11

CHIEF HIGHWAY ENGINEER DATE

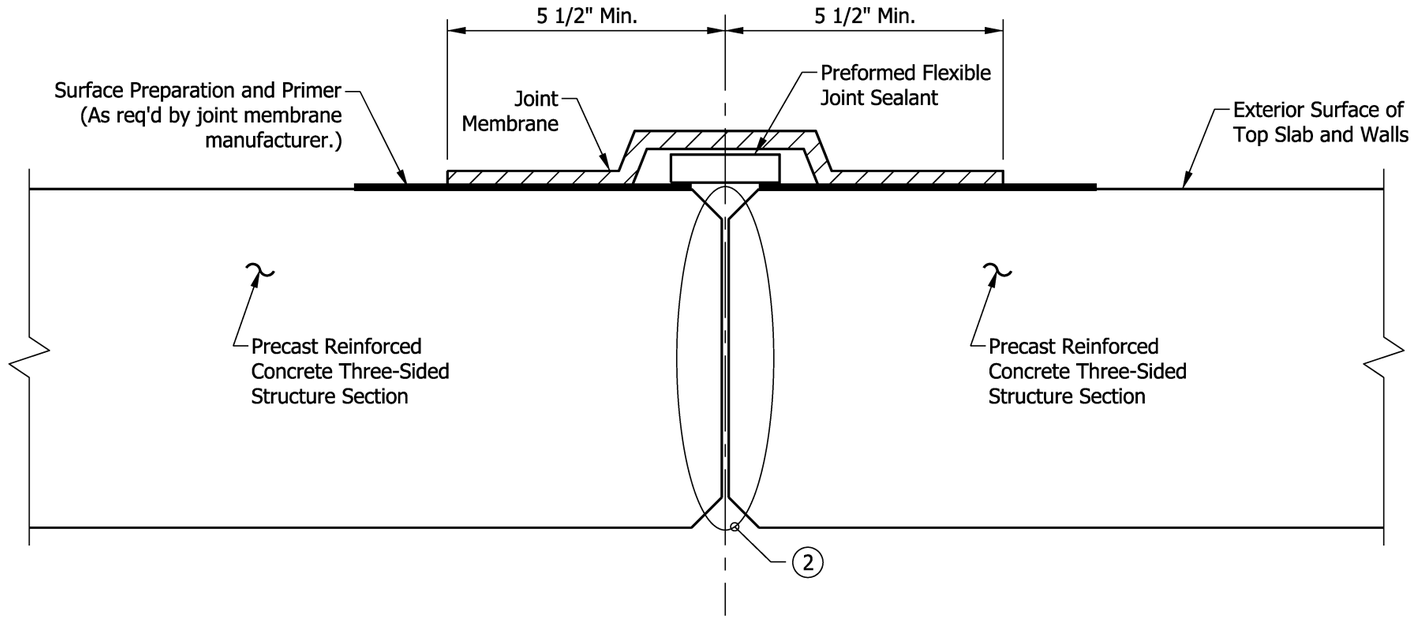

NOTES:

1. Structure Section Joint detail shall be used on top and sides of structure.

(2) Structure sections shall be brought into firm contact during installation.

INDIANA DEPARTMENT OF TRANSPORTATION

PRECAST REINFORCED CONCRETE THREE-SIDED STRUCTURE SECTION JOINT

SEPTEMBER 2023

STANDARD DRAWING NO. E 723-TSJT-01

SUBHI BAZLAMIT
REGISTERED
No.
12000143
STATE OF
INDIANA
PROFESSIONAL ENGINEER

Subhi Bazlamit 04/28/2023
DESIGN STANDARDS ENGINEER DATE

05/08/2023
CHIEF ENGINEER DATE

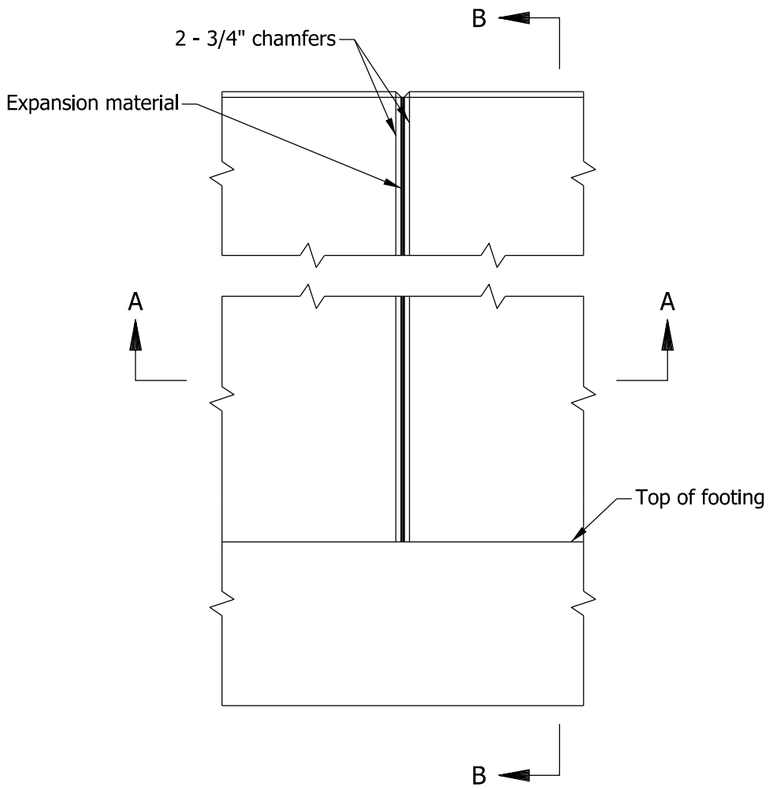

WALL FRONT FACE

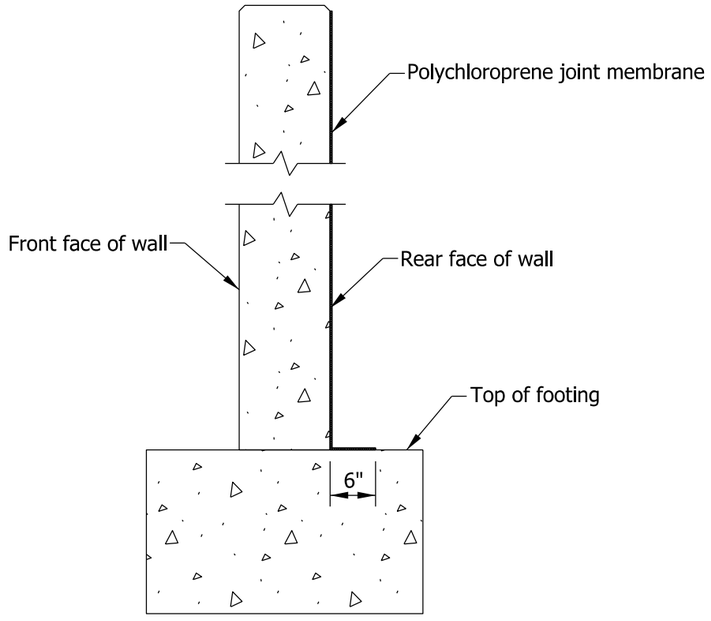

SECTION B-B

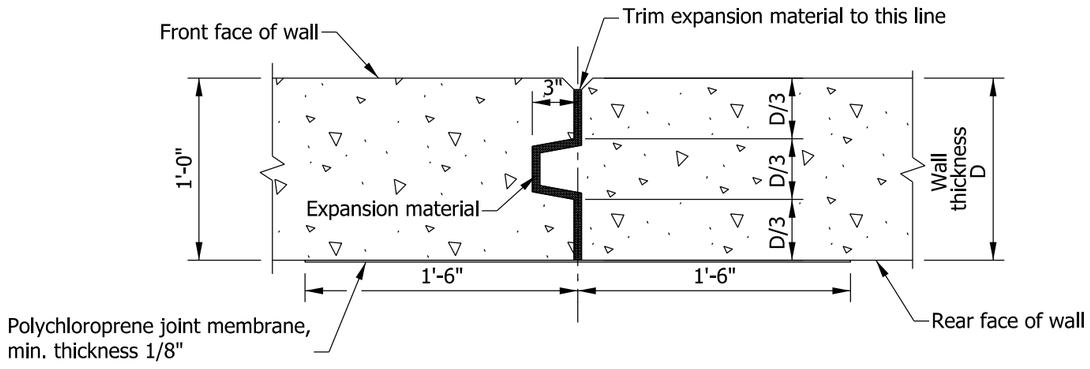

SECTION A-A

NOTES

1. Expansion material in joints shall be preformed joint filler.
2. All chamfered edges shall be 3/4".

INDIANA DEPARTMENT OF TRANSPORTATION

EXPANSION JOINT

SEPTEMBER 2012

STANDARD DRAWING NO. E 724-BJTS-01

RICHARD L. VanCLEAVE REGISTERED No. 9750 STATE OF INDIANA PROFESSIONAL ENGINEER

/s/ Richard L. Van Cleave 09/04/12

SUPERVISOR, ROADWAY STANDARDS DATE

/s/ Mark A. Miller 09/04/12

CHIEF ENGINEER DATE

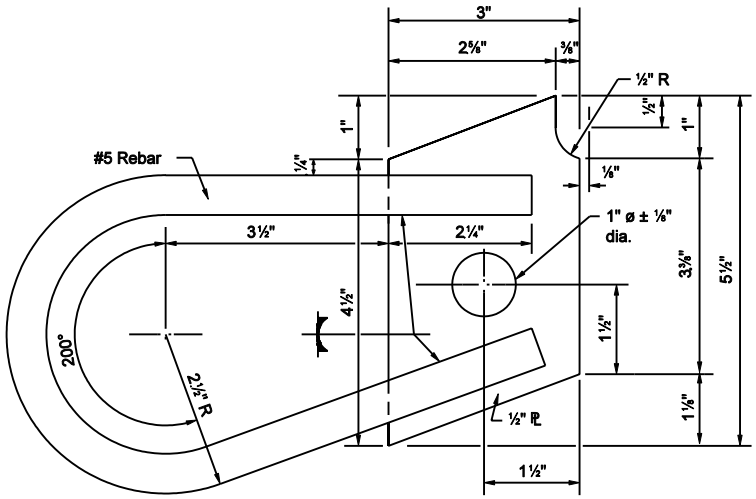

ANCHOR PLATE ALTERNATE A-1

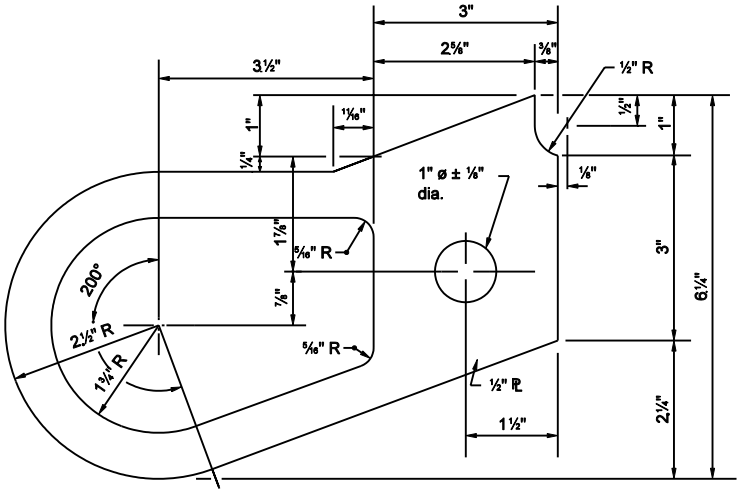

ANCHOR PLATE ALTERNATE A-2

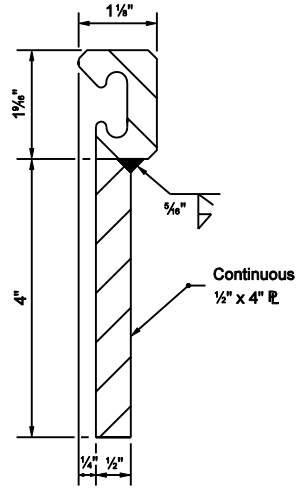

EXTRUSION & PLATE
ASSEMBLY DETAIL

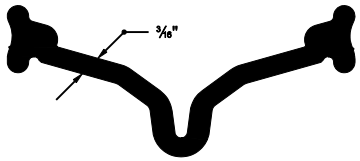

STRIP SEAL

INDIANA DEPARTMENT OF TRANSPORTATION

EXPANSION JOINTS
CLASS SS (ALTERNATE A)

SEPTEMBER 2003

STANDARD DRAWING NO. E 724-BSSJ -01

RICHARD L. VanCLEAVE
REGISTERED
No. 9750
STATE OF INDIANA
PROFESSIONAL ENGINEER

DESIGN STANDARDS ENGINEER

/s/ Richard L. VanCleave — 9-02-03
DESIGN STANDARDS ENGINEER — DATE

/s/ Richard K. Smutzer — 9-02-03
CHIEF HIGHWAY ENGINEER — DATE

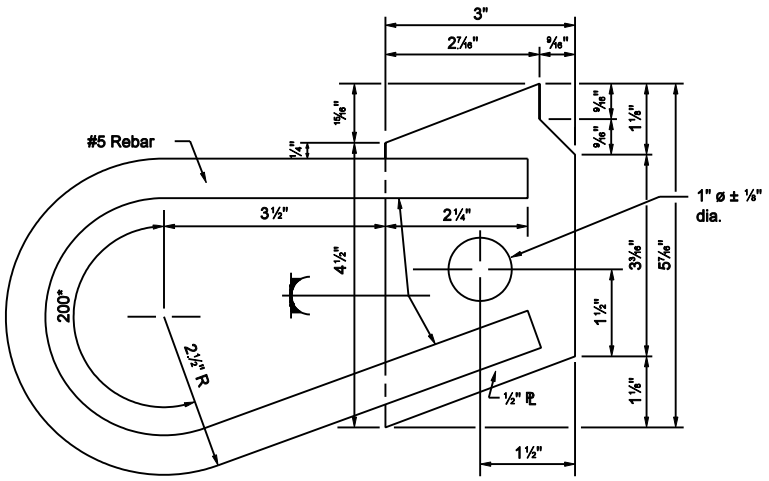

ANCHOR PLATE ALTERNATE B-1

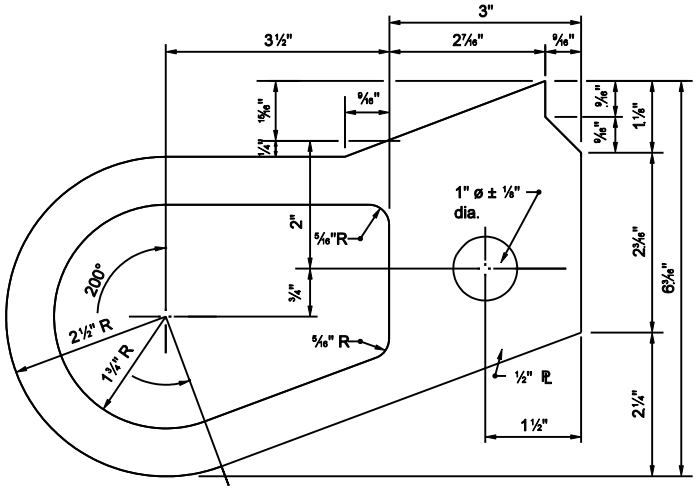

ANCHOR PLATE ALTERNATE B-2

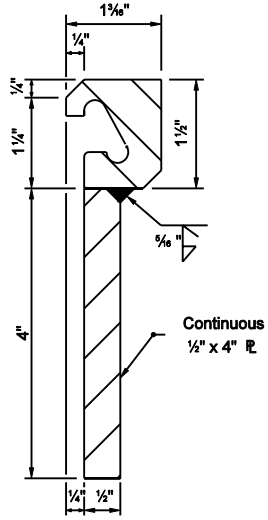

EXTRUSION & PLATE
ASSEMBLY DETAIL

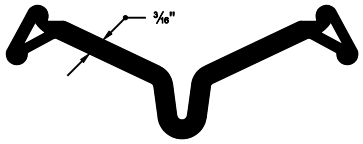

STRIP SEAL

INDIANA DEPARTMENT OF TRANSPORTATION

EXPANSION JOINTS
CLASS SS (ALTERNATE B)

SEPTEMBER 2003

STANDARD DRAWING NO. E 724-BSSJ -02

RICHARD L. VanCLEAVE REGISTERED No. 9750 STATE OF INDIANA PROFESSIONAL ENGINEER
DESIGN STANDARDS ENGINEER

/s/ Richard L. VanCleave 9-02-03
DESIGN STANDARDS ENGINEER DATE

/s/ Richard K. Smutzer 9-02-03
CHIEF HIGHWAY ENGINEER DATE

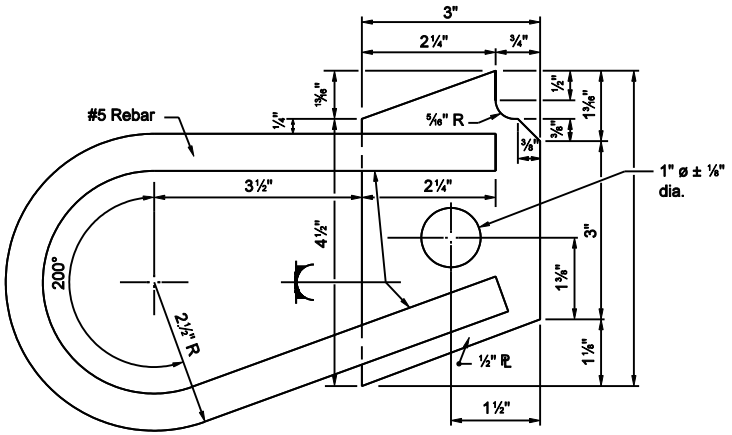

ANCHOR PLATE ALTERNATE C-1

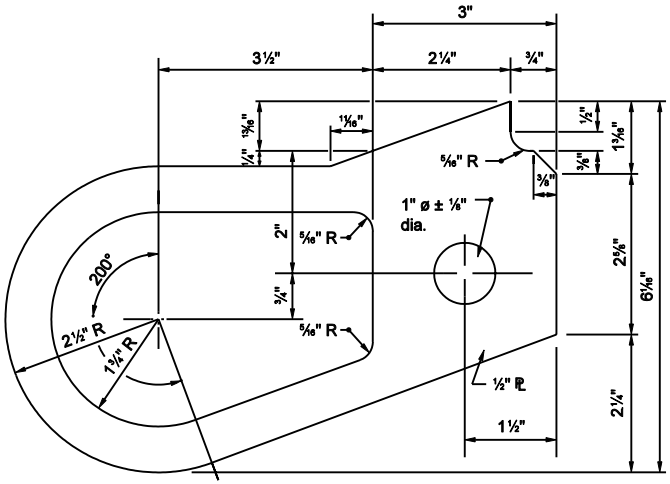

ANCHOR PLATE ALTERNATE C-2

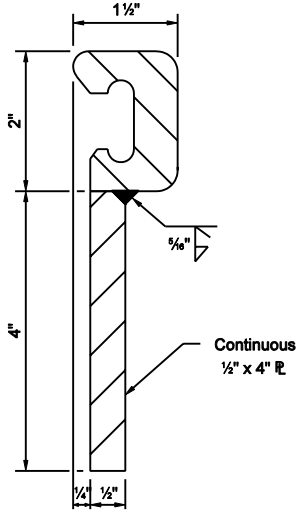

EXTRUSION & PLATE
ASSEMBLY DETAIL

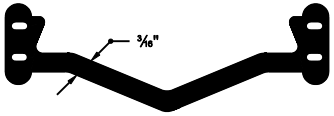

STRIP SEAL

INDIANA DEPARTMENT OF TRANSPORTATION

EXPANSION JOINTS
CLASS SS (ALTERNATE C)

SEPTEMBER 2003

STANDARD DRAWING NO. E 724-BSSJ-03

RICHARD L. VanCLEAVE REGISTERED No. 9750 STATE OF INDIANA PROFESSIONAL ENGINEER

DESIGN STANDARDS ENGINEER

/s/ Richard L. VanCleave 9-02-03
DESIGN STANDARDS ENGINEER DATE

/s/ Richard K. Smutzer 9-02-03
CHIEF HIGHWAY ENGINEER DATE

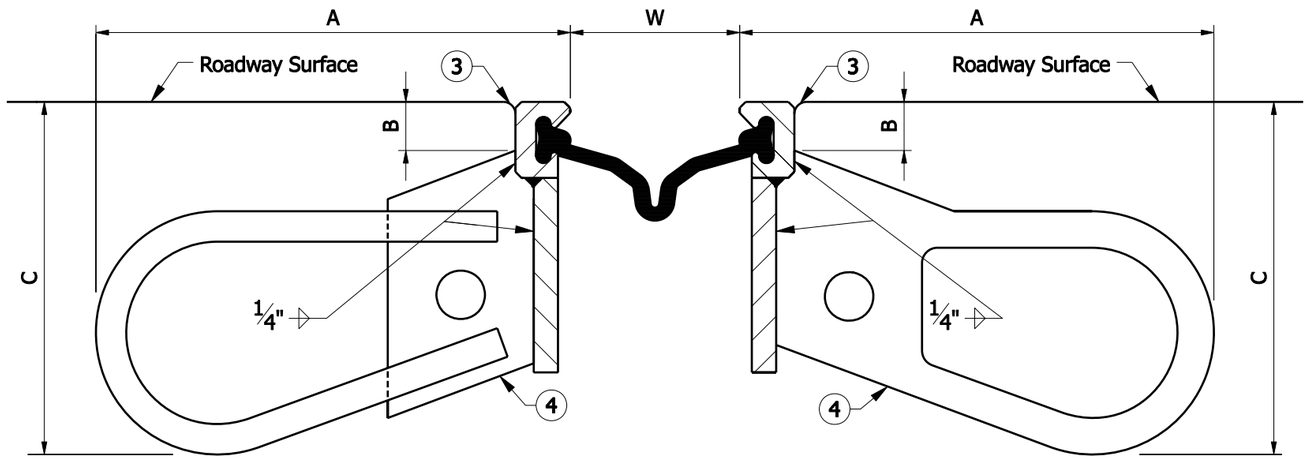

INSTALLATION DETAIL

GENERAL NOTES

1. This sheet shall be used in conjunction with Standard Drawing Nos. E 724-BSSJ-05 through 09.
2. Allowable expansion lengths shall not be increased for skewed structures.

(3) Tool concrete edges to 1/4" to 3/8" radius.

(4) Anchors shall be spaced at 9 in.

DIMENSIONS			
ALTERNATES	A	B	C
A-1	9 3/4"	1"	7 1/4"
A-2			
B-1	9 3/4"	15/16"	7 1/8"
B-2			
C-1	9 3/4"	1 13/16"	7 1/4"
C-2			
D-1	9 3/4"	1"	7 5/16"
D-2			

JOINT SETTING TABLE			
Ambient Temperature °F	DIMENSION "W" Expansion Length		
	100'-200'	200'-300'	300'-400'
120°	2 1/8"	1 5/16"	1/2"
100°	2 7/16"	1 3/4"	1 1/8"
80°	2 11/16"	2 3/16"	1 11/16"
60°	3"	2 5/8"	2 1/4"
40°	3 5/16"	3 1/16"	2 13/16"
20°	3 9/16"	3 1/2"	3 3/8"
0°	3 7/8"	3 5/16"	4"

INDIANA DEPARTMENT OF TRANSPORTATION

EXPANSION JOINTS CLASS SS

SEPTEMBER 2007

STANDARD DRAWING NO. E 724-BSSJ-04

RICHARD L. VanCLEAVE REGISTERED No. 9750 STATE OF INDIANA PROFESSIONAL ENGINEER

DESIGN STANDARDS ENGINEER

/s/ Richard L. VanCleave 09/04/07
DESIGN STANDARDS ENGINEER — DATE

/s/ Mark A. Miller 09/04/07
CHIEF HIGHWAY ENGINEER — DATE

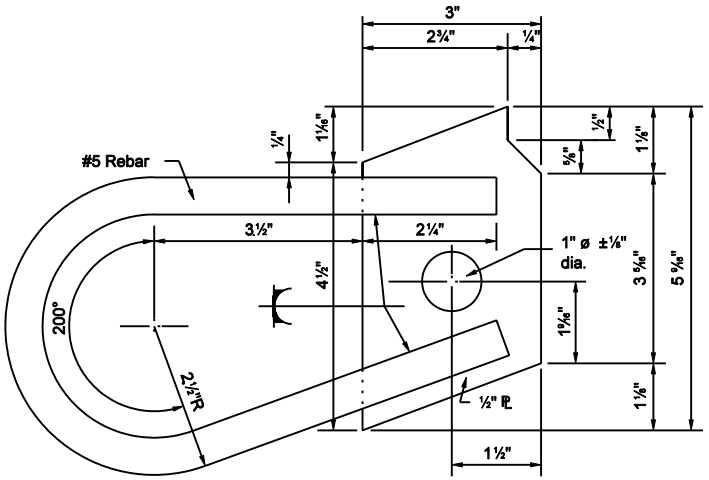

ANCHOR PLATE ALTERNATE D-1

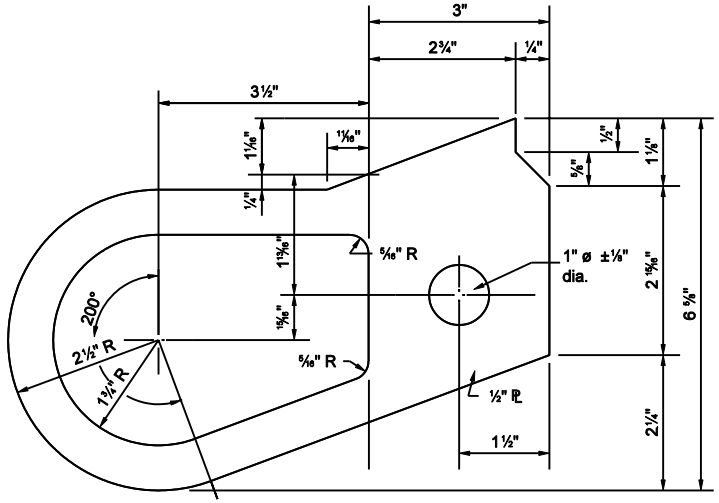

ANCHOR PLATE ALTERNATE D-2

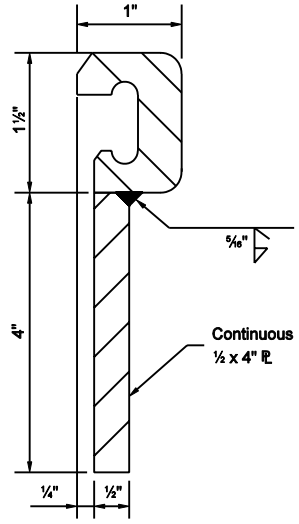

EXTRUSION & PLATE
ASSEMBLY DETAIL

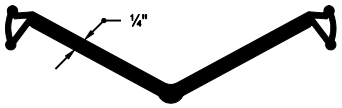

RJ-400 STRIP
SEAL GLAND

INDIANA DEPARTMENT OF TRANSPORTATION

EXPANSION JOINTS
CLASS SS (ALTERNATE D)

SEPTEMBER 2003

STANDARD DRAWING NO. E 724-BSSJ-04A

RICHARD L. VanCLEAVE REGISTERED No. 9750 STATE OF INDIANA PROFESSIONAL ENGINEER

DESIGN STANDARDS ENGINEER

/s/ Richard L. VanCleave 9-02-03
DESIGN STANDARDS ENGINEER DATE

/s/ Richard K. Smutzer 9-02-03
CHIEF HIGHWAY ENGINEER DATE

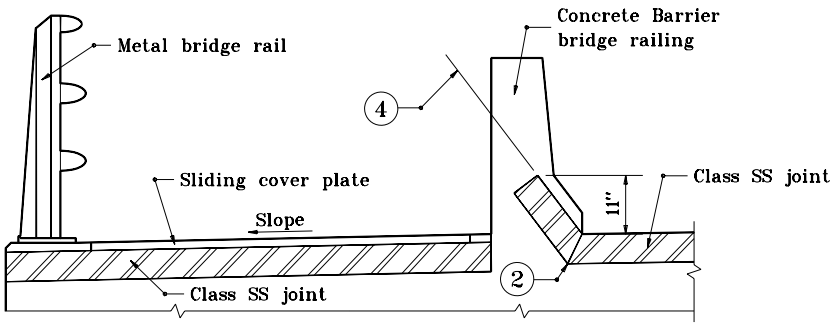

SECTION D–D

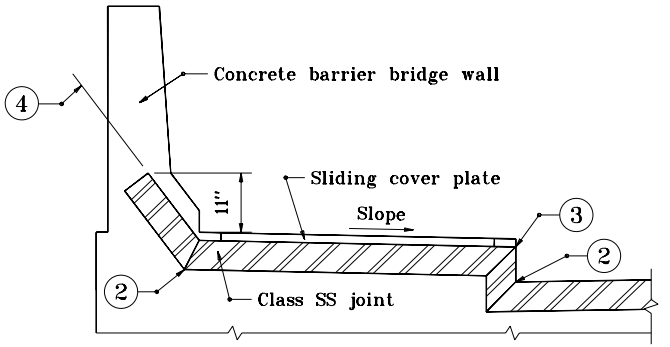

SECTION B–B

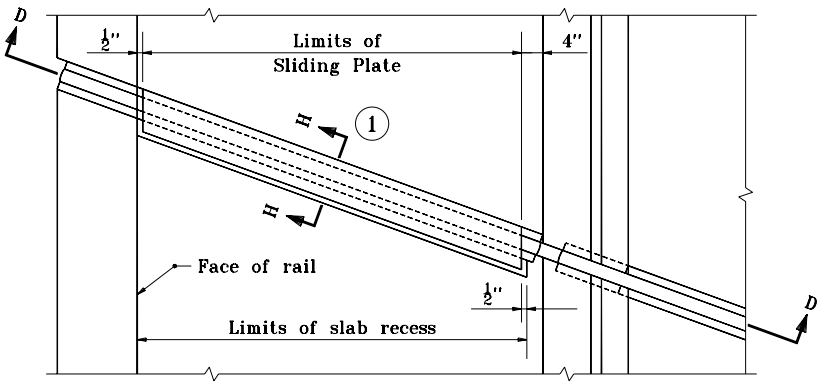

PLAN

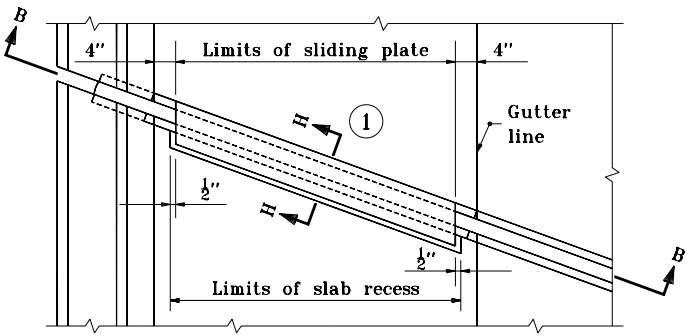

PLAN

SIDEWALKS

(1) For section H–H see sheet number E 724-BSSJ-08.

(2) The extrusion and plate assemblies with anchors shall be miter cut and shop spliced at this location. A miter cut, vulcanized shop splice will be require in the strip seal at this location.

(3) The extrusion and plate assemblies with anchors shall be shop prepared for field welding at this location. A miter cut vulcanized shop splice will be require in the strip seal at this location.

(4) The joint shall be placed parallel to the lower sloped face of the rail with a maximum 3 in. depth to the top of the extrusion.

INDIANA DEPARTMENT OF TRANSPORTATION

EXPANSION JOINTS CLASS SS

SEPTEMBER 1994

STANDARD DRAWING NO. **E 724-BSSJ-05**

ANTHONY L. UREMOVICH REGISTERED No. 18095 STATE OF INDIANA PROFESSIONAL ENGINEER

DESIGN STANDARDS ENGINEER

DETAILS PLACED IN THIS FORMAT	11-15-99
/s/ Anthony L. Uremovich DESIGN STANDARDS ENGINEER	11-15-99 DATE
/s/ Firooz Zandi CHIEF HIGHWAY ENGINEER	11-15-99 DATE
ORIGINALLY APPROVED	9-30-94

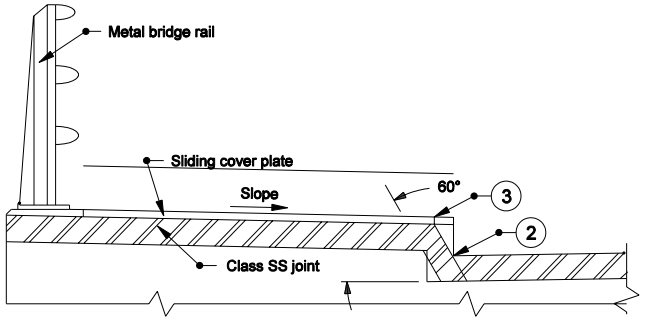

SECTION C-C

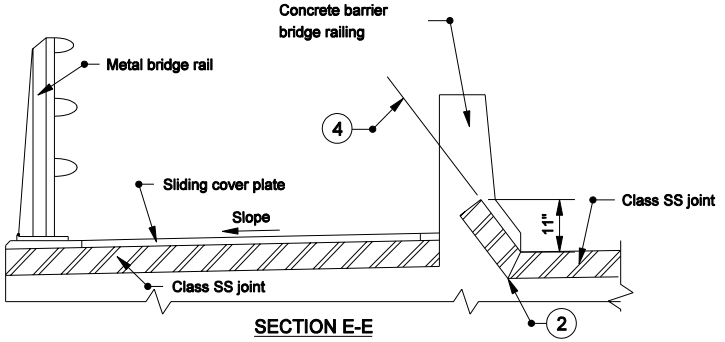

SECTION E-E

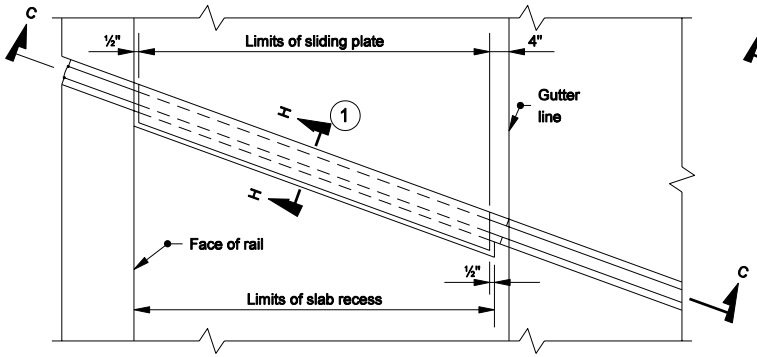

PLAN

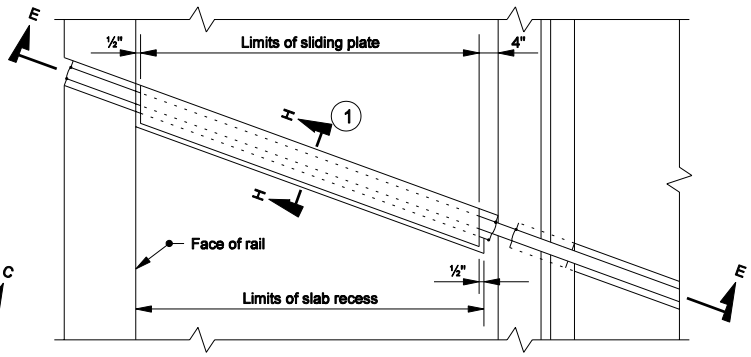

PLAN

SIDEWALKS

(1) For section H-H see sheet number E 724-BSSJ-08.

(2) The extrusion and plate assemblies with anchors shall be miter cut and shop spliced at this location. A miter cut, vulcanized shop splice will be required in the strip seal at this location.

(3) The extrusion and plate assemblies with anchors shall be shop prepared for field welding at this location. A miter cut vulcanized shop splice will be required in the strip seal at this location.

(4) The joint shall be placed parallel to the lower sloped face of the rail with a maximum 3 in. depth to the top of the extrusion.

INDIANA DEPARTMENT OF TRANSPORTATION

EXPANSION JOINTS
CLASS SS

MARCH 2005

STANDARD DRAWING NO. E 724-BSSJ-06

RICHARD L. VanCLEAVE REGISTERED No. 9750 STATE OF INDIANA PROFESSIONAL ENGINEER

DESIGN STANDARDS ENGINEER

/s/ Richard L. VanCleave 3-01-05
DESIGN STANDARDS ENGINEER DATE

/s/ Richard K. Smutzer 3-01-05
CHIEF HIGHWAY ENGINEER DATE

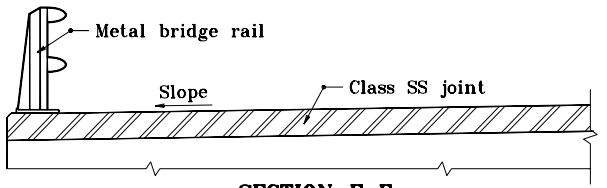

SECTION F-F

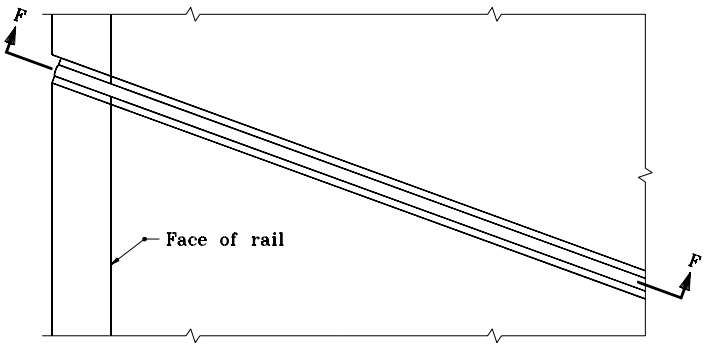

PLAN

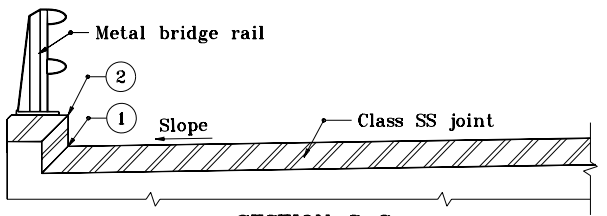

SECTION G-G

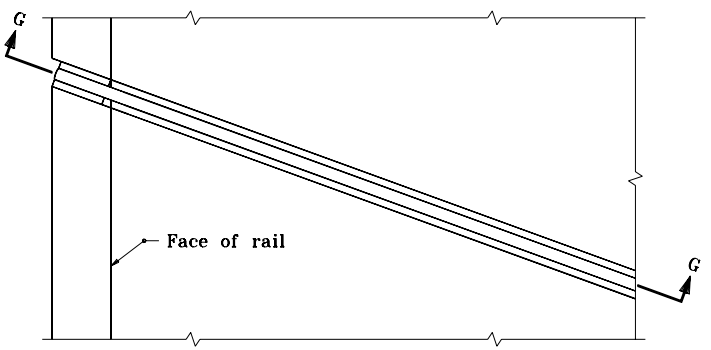

PLAN

METAL RAILING WITHOUT SIDEWALK

(1) The extrusion and plate assemblies with anchors shall be miter cut and shop spliced at this location. A miter cut, vulcanized shop spliced will be required in the strip seal at the location.

(2) The extrusion and plate assemblies with anchors shall be shop prepared for field welding at this location. A miter cut, vulcanized shop splice will be required in the strip seal at this location.

INDIANA DEPARTMENT OF TRANSPORTATION

EXPANSION JOINTS CLASS SS

SEPTEMBER 1994

STANDARD DRAWING NO. **E 724-BSSJ-07**

ANTHONY L. UREMOVICH REGISTERED No. 18095 STATE OF INDIANA PROFESSIONAL ENGINEER

DESIGN STANDARDS ENGINEER

DETAILS PLACED IN THIS FORMAT 11-15-99

/s/ Anthony L. Uremovich 11-15-99
DESIGN STANDARDS ENGINEER DATE

/s/ Firooz Zandi 11-15-99
CHIEF HIGHWAY ENGINEER DATE

ORIGINALLY APPROVED 9-30-94

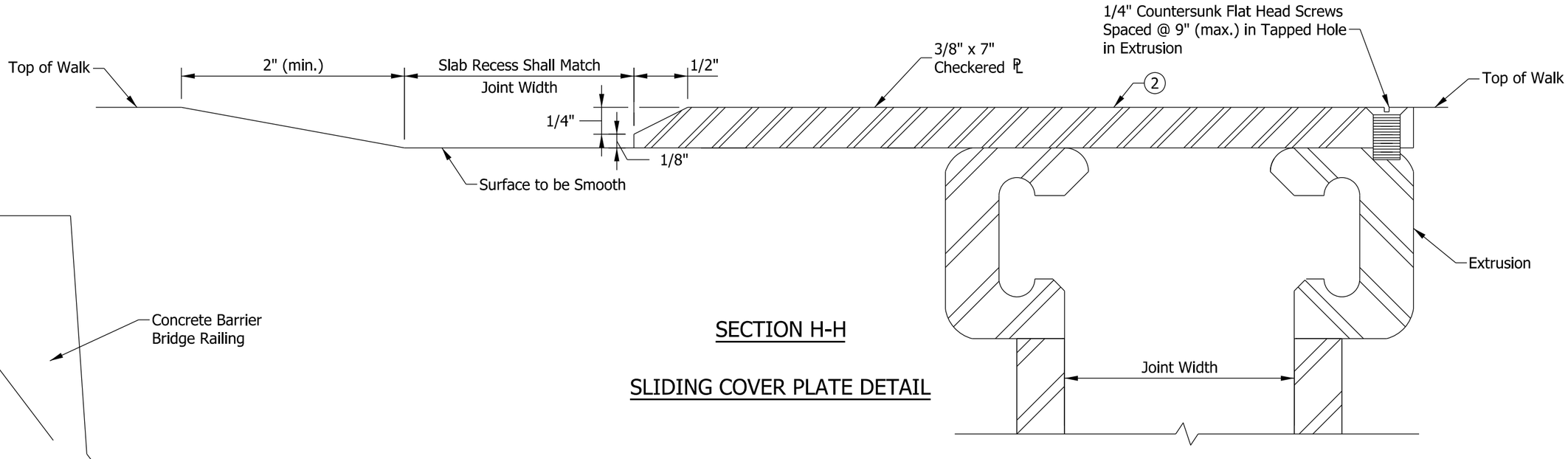

SECTION H-H

SLIDING COVER PLATE DETAIL

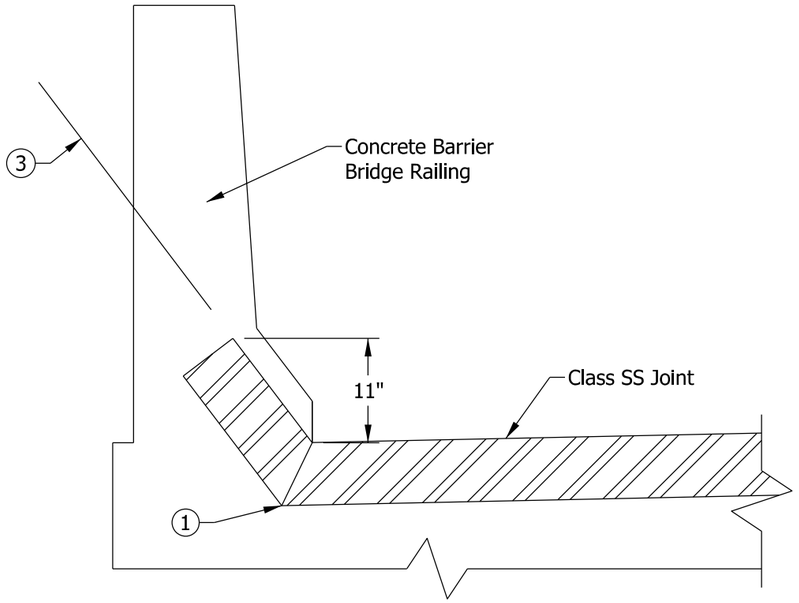

SECTION A-A

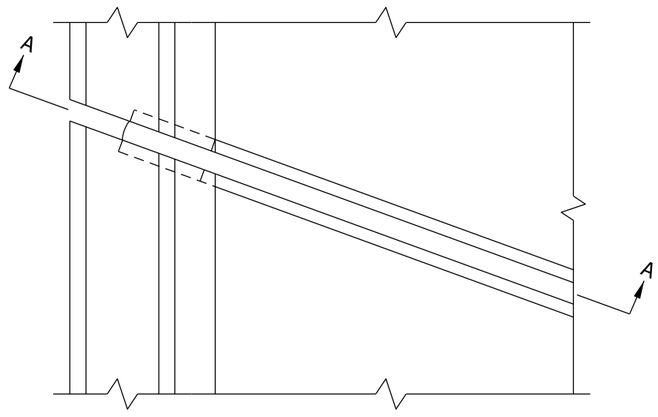

CONCRETE BARRIER BRIDGE RAILING

NOTES:

(1) The extrusion and plate assemblies with anchors shall be miter cut and shop spliced at this location. A miter cut, vulcanized shop splice will be required in the strip seal at this location.

(2) The length of the sliding cover plate, measured along the centerline of the Class SS Joint, shall be 3/8" shorter at each end than the limits of the recess as shown on these details.

(3) The joint shall be placed parallel to the lower sloped face of the rail with a maximum 3" depth to the top of the extrusion.

INDIANA DEPARTMENT OF TRANSPORTATION

EXPANSION JOINTS
CLASS SS

SEPTEMBER 2021

STANDARD DRAWING NO. E 724-BSSJ-08

JEREMY C. HUNTER
REGISTERED
No.
PE10505669
STATE OF
INDIANA
PROFESSIONAL ENGINEER

Jeremy C Hunter 3/2/2021
DESIGN STANDARDS ENGINEER DATE

03/17/2021
CHIEF ENGINEER DATE

GENERAL NOTES

1. Standard Drawing Nos. E 724-BSSJ-05 through 09 shall be used in conjunction with Standard Drawing Nos. E 724-BSSJ-01 through 04.

2. The details shown on Standard Drawing Nos. E 724-BSSJ-05 through 09 are the only approved methods of placing Class SS Joints in curbs, sidewalks, concrete bridge railing and under metal bridge railing.

3. The locations of the anchor plates in sidewalks and in the concrete barrier bridge rail shall be as shown on the approved shop drawings but in no case shall the spacing exceed 9 in.

INDIANA DEPARTMENT OF TRANSPORTATION

EXPANSION JOINTS CLASS SS

SEPTEMBER 1994

STANDARD DRAWING NO. **E 724-BSSJ-09**

ANTHONY L. UREMOVICH REGISTERED No. 18095 STATE OF INDIANA PROFESSIONAL ENGINEER

DESIGN STANDARDS ENGINEER

DETAILS PLACED IN THIS FORMAT	11-15-99
/s/ Anthony L. Uremovich DESIGN STANDARDS ENGINEER	11-15-99 DATE
/s/ Firooz Zandi CHIEF HIGHWAY ENGINEER	11-15-99 DATE
ORIGINALLY APPROVED	9-30-94

INDEX	
SHEET NO.	SUBJECT
1	Bridge Elastomeric Bearing Pads Index
2	Bridge Elastomeric Bearing Pads Type 1 to 7 for Prestressed I-Beams and Box Beams
3	Bridge Elastomeric Bearing Pads Type T1 to TH4 for Prestressed Bulb-Tee and Wide Flange Prestressed Bulb-Tee Beams
4	Elastomeric Bearing Assembly Details for Type T1 to TH4 for Prestressed Bulb-Tee and Wide Flange Prestressed Bulb-Tee Beams
5	Bridge Elastomeric Bearing Pads Type S for Steel Beams
6	Elastomeric Bearing Assembly Details for Type S for Steel Beams

INDIANA DEPARTMENT OF TRANSPORTATION

BRIDGE ELASTOMERIC BEARING PADS
INDEX

SEPTEMBER 2026

STANDARD DRAWING NO. E 726-BEBP-01

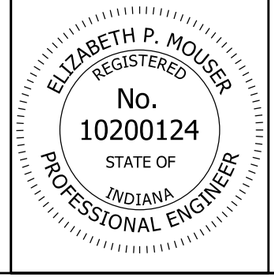

03/06/2026
DESIGN STANDARDS ENGINEER DATE

04/08/2026
CHIEF ENGINEER DATE

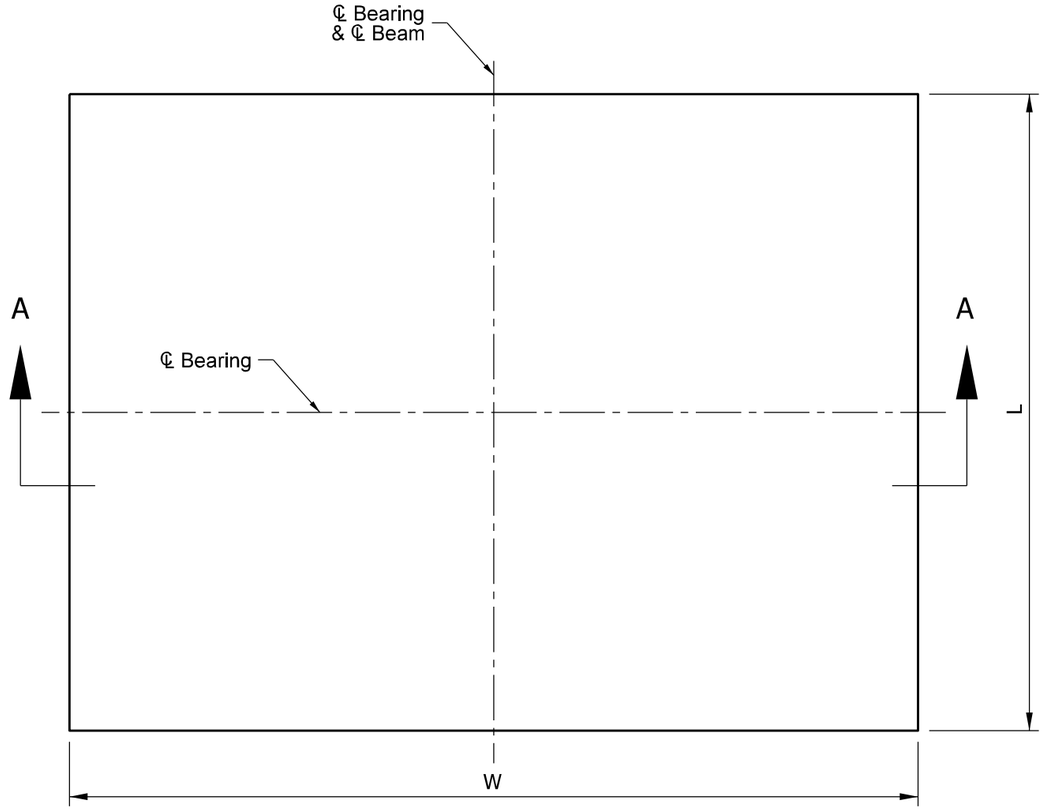

ELASTOMERIC BEARING PAD
PLAN

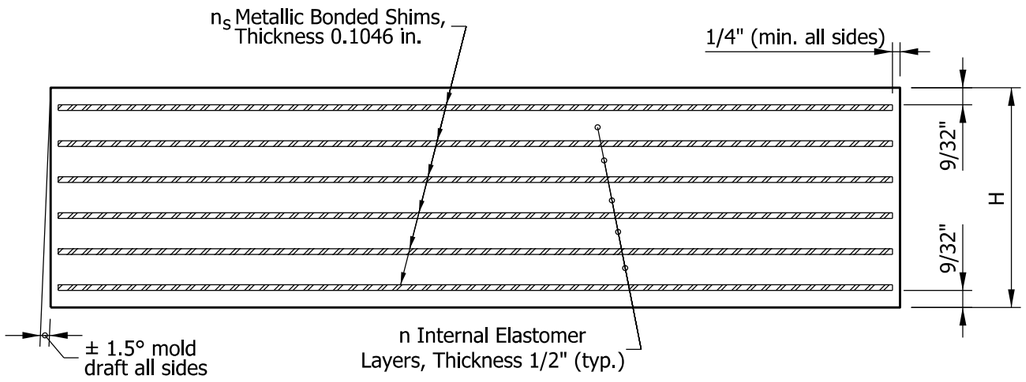

SECTION A - A

NOTES:

(1) h_{rt} is defined as the summation of all internal elastomer thicknesses plus the thickness of the two external layers.

TABLE OF DIMENSIONS

Bearing Designation	Bearing Width W	Bearing Length L	Number of Internal Elastomer Layers n	h_{rt} (1)	Number of Steel Shims n_s	Bearing Total Thickness H
TYPE 1	14"	10 1/2"	3	2 1/16"	4	2 15/32"
TYPE 2	14"	11 1/2"	4	2 9/16"	5	3 3/32"
TYPE 3	18"	11"	4	2 9/16"	5	3 3/32"
TYPE 4	24"	12"	5	3 1/16"	6	3 11/16"
TYPE 5A	22"	11"	4	2 9/16"	5	3 3/32"
TYPE 6A	22"	10"	4	2 9/16"	5	3 3/32"
TYPE 7A	22"	9"	3	2 1/16"	4	2 15/32"
TYPE 5B	12"	12"	4	2 9/16"	5	3 3/32"
TYPE 6B	12"	11"	4	2 9/16"	5	3 3/32"
TYPE 7B	12"	10"	3	2 1/16"	4	2 15/32"

INDIANA DEPARTMENT OF TRANSPORTATION

BRIDGE ELASTOMERIC BEARING PADS TYPE 1 to 7 FOR PRESTRESSED I-BEAMS AND BOX BEAMS

SEPTEMBER 2026

STANDARD DRAWING NO. E 726-BEBP-02

ELIZABETH P. MOUSER
REGISTERED
No. 10200124
STATE OF INDIANA
PROFESSIONAL ENGINEER

03/06/2026
DESIGN STANDARDS ENGINEER — DATE

04/08/2026
CHIEF ENGINEER — DATE

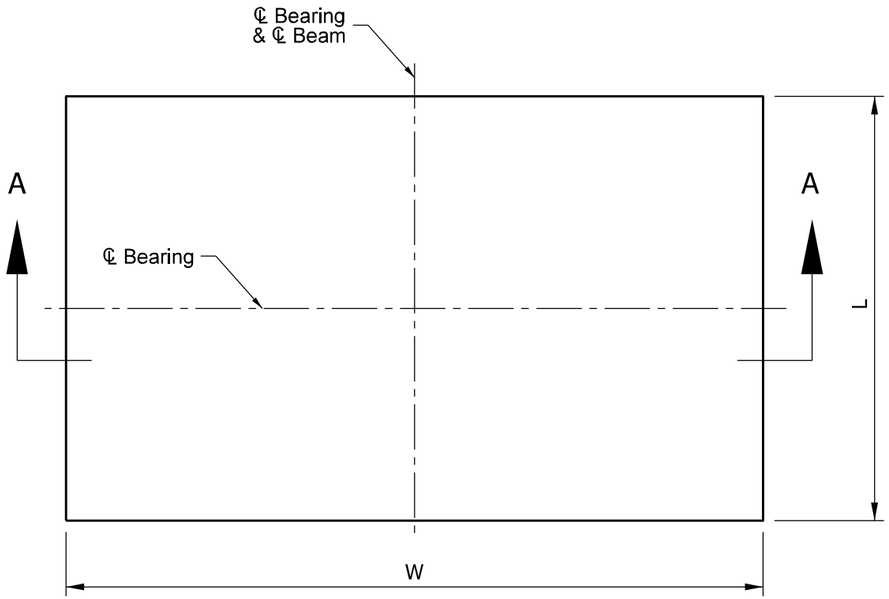

ELASTOMERIC BEARING PAD
PLAN

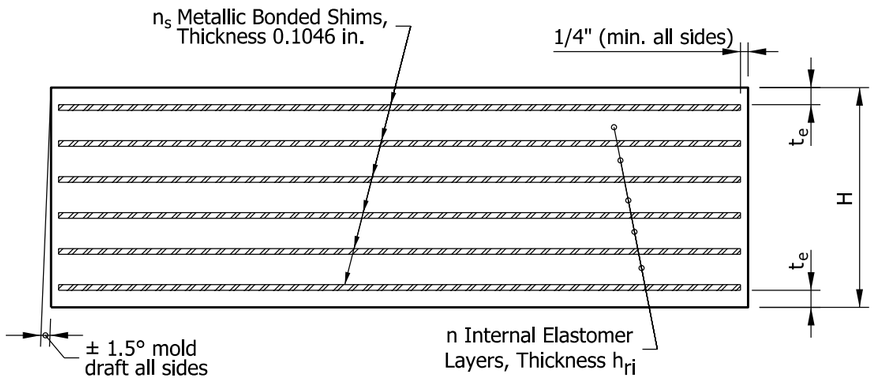

SECTION A - A

NOTES:

(1) h_{rt} is defined as the summation of all internal elastomer thicknesses plus the thickness of the two external layers.

TABLE OF DIMENSIONS

Bearing Designation	Bearing Width W	Bearing Length L	Internal Elastomer Thickness h_{ri}	Number of Internal Elastomer Layers n	External Elastomer Thickness t_e	h_{rt} (1)	Number of Steel Shims n_s	Bearing Total Thickness H
T1	23"	12"	1/2"	5	9/32"	3 1/16"	6	3 11/16"
T2	23"	14"	1/2"	6	9/32"	3 9/16"	7	4 9/32"
T3	23"	17"	19/32"	7	5/16"	4 25/32"	8	5 5/8"
T4	23"	19"	19/32"	8	5/16"	5 3/8"	9	6 5/16"
TH1	36"	12"	1/2"	5	9/32"	3 1/16"	6	3 11/16"
TH2	36"	14"	1/2"	6	9/32"	3 9/16"	7	4 9/32"
TH3	36"	17"	19/32"	7	5/16"	4 25/32"	8	5 5/8"
TH4	36"	19"	19/32"	8	5/16"	5 3/8"	9	6 5/16"

INDIANA DEPARTMENT OF TRANSPORTATION

BRIDGE ELASTOMERIC BEARING PADS
TYPE T1 to TH4 FOR PRESTRESSED BULB-TEE AND
WIDE FLANGE PRESTRESSED BULB-TEE BEAMS

SEPTEMBER 2026

STANDARD DRAWING NO. E 726-BEBP-03

ELIZABETH P. MOUSER
REGISTERED
No.
10200124
STATE OF
INDIANA
PROFESSIONAL ENGINEER

03/06/2026
DESIGN STANDARDS ENGINEER DATE

04/08/2026
CHIEF ENGINEER DATE

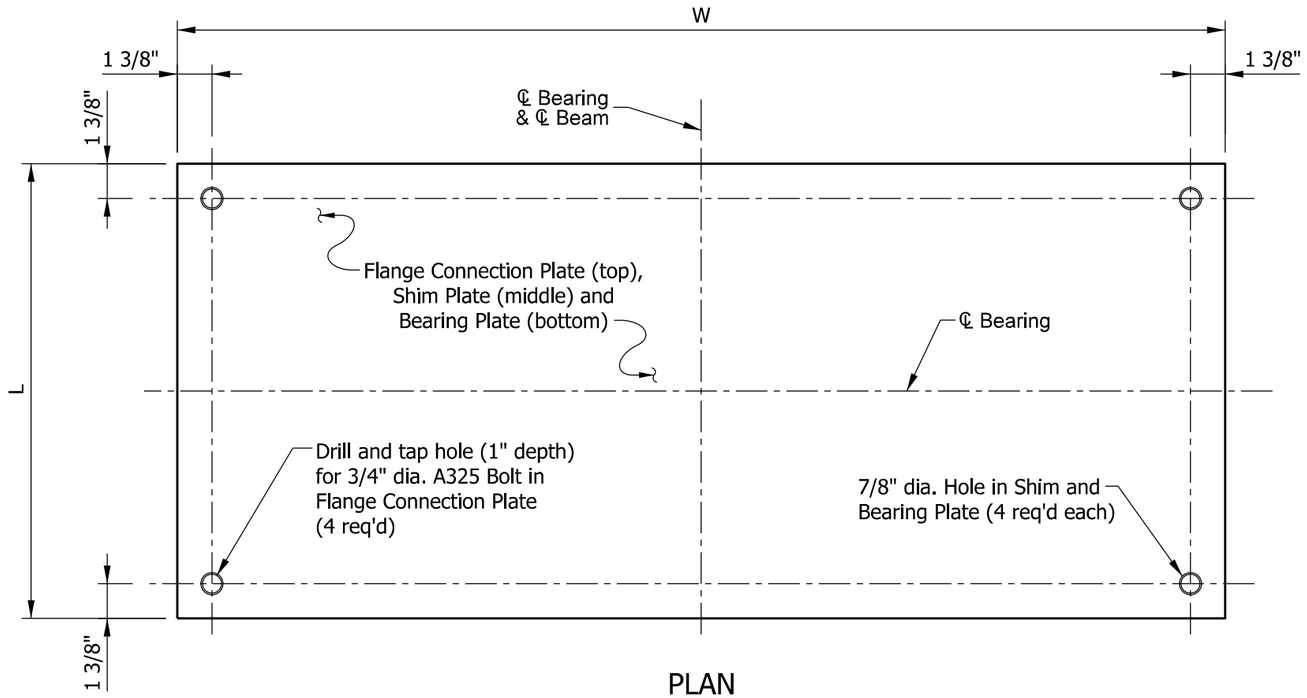

PLAN
BEARING PLATE, SHIM & FLANGE CONNECTION PLATE

TABLE OF DIMENSIONS

Bearing Designation	Plate Width W	Plate Length L	Flange Connection Plate Thickness	Bearing Plate Thickness
T1	28 1/2"	18"	1 1/2"	3/4"
T2	28 1/2"	18"	1 1/2"	3/4"
T3	28 1/2"	18"	1 1/2"	3/4"
T4	28 1/2"	20"	1 1/2"	3/4"
TH1	41 1/2"	18"	1 1/2"	3/4"
TH2	41 1/2"	18"	1 1/2"	3/4"
TH3	41 1/2"	18"	1 1/2"	3/4"
TH4	41 1/2"	20"	1 1/2"	3/4"

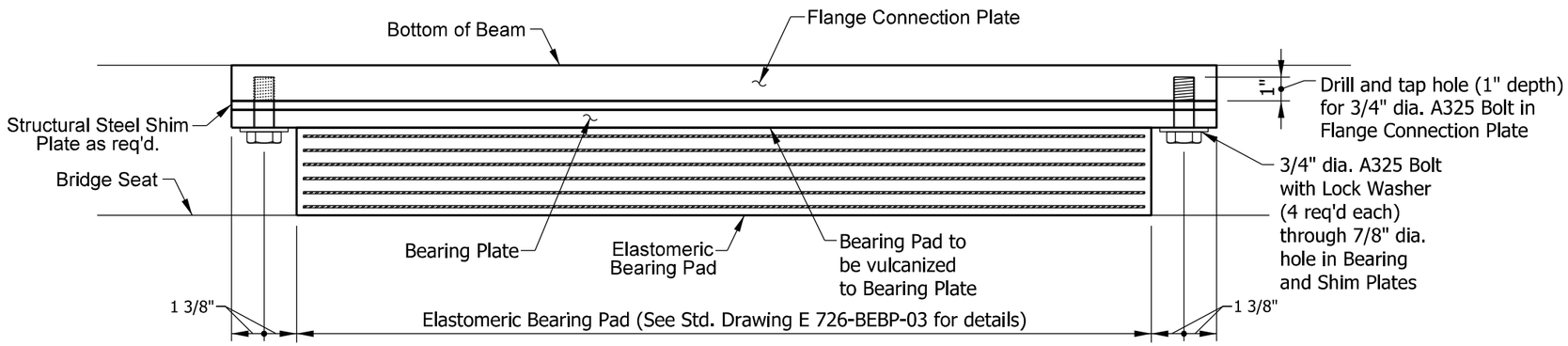

ELEVATION
BEARING TOP PLATE, SHIM & FLANGE CONNECTION PLATE

INDIANA DEPARTMENT OF TRANSPORTATION

ELASTOMERIC BEARING ASSEMBLY DETAILS
TYPE T1 to TH4 FOR PRESTRESSED BULB-TEE AND
WIDE FLANGE PRESTRESSED BULB-TEE BEAMS

SEPTEMBER 2026

STANDARD DRAWING NO. E 726-BEBP-04

ELIZABETH P. MOUSER
REGISTERED
No. 10200124
STATE OF INDIANA
PROFESSIONAL ENGINEER

03/06/2026
DESIGN STANDARDS ENGINEER DATE

04/08/2026
CHIEF ENGINEER DATE

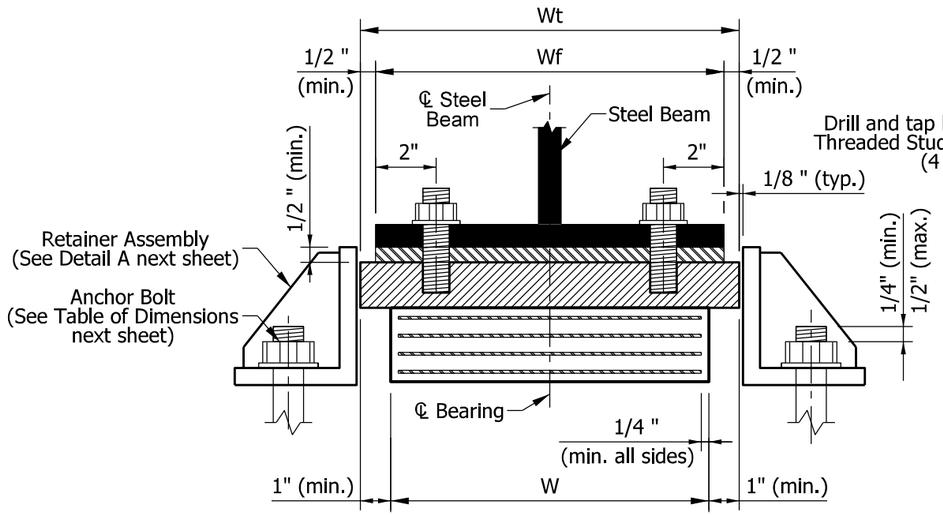

CROSS SECTION THROUGH ASSEMBLY

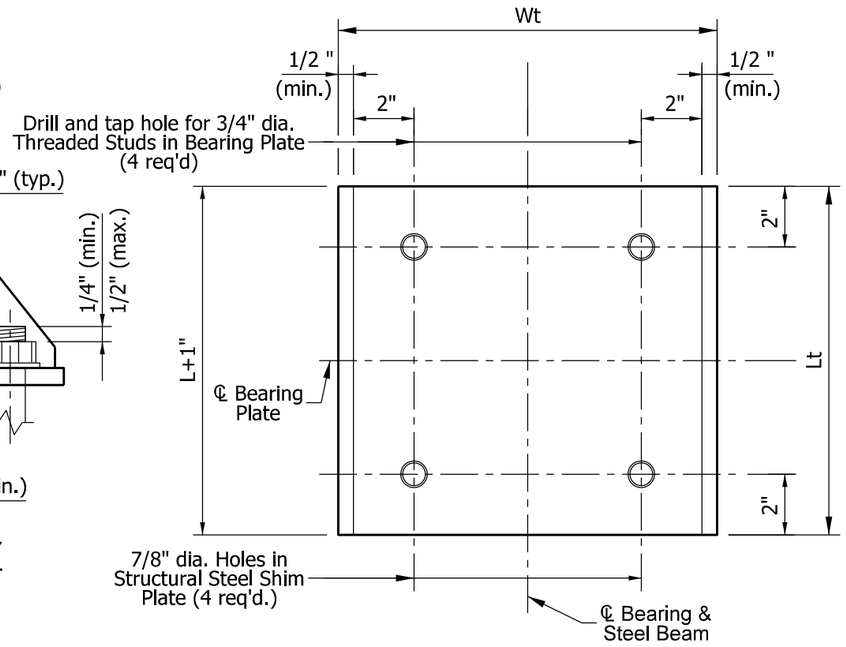

PLAN - BEARING & SHIM PLATES

NOTES:

1. The bearing plate size shall be calculated as follows: Lt = L + 1"; Wt = Wf + 1" or Wt = W + 2" whichever is greater.
2. Minimum dimension required is 1 1/2 " + flange thickness + shim thickness.
3. Minimum thickness 1 1/2".
4. See standard drawing E 726-BEBP-06 for Table of Dimensions and Detail A.

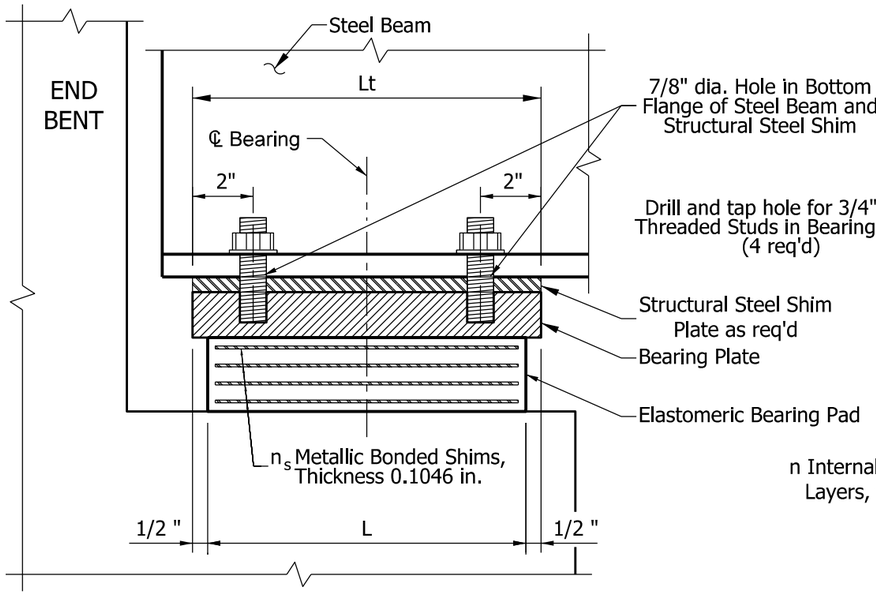

LONGITUDINAL SECTION THROUGH ASSEMBLY

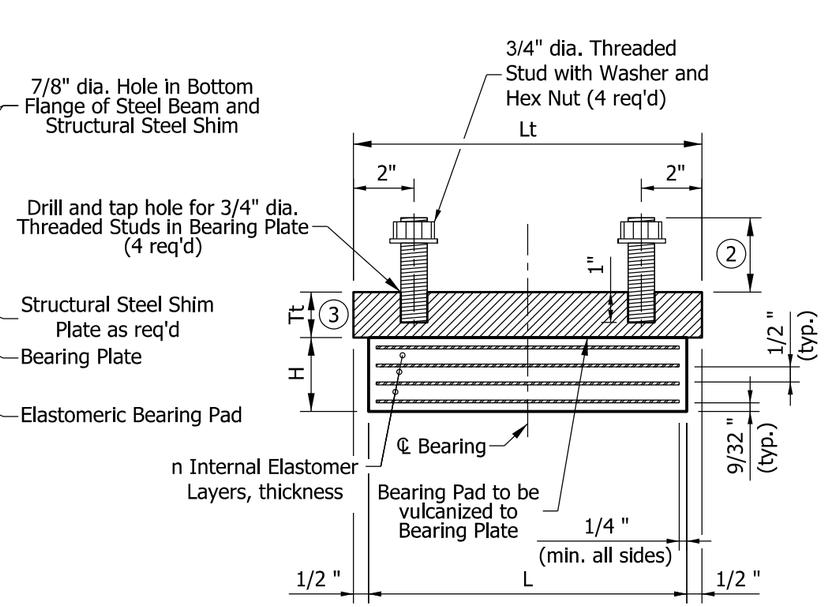

BEARING ASSEMBLY

INDIANA DEPARTMENT OF TRANSPORTATION

BRIDGE ELASTOMERIC BEARING PADS
TYPE S FOR STEEL BEAMS

SEPTEMBER 2026

STANDARD DRAWING NO. E 726-BEBP-05

ELIZABETH P. MOUSER REGISTERED No. 10200124 STATE OF INDIANA PROFESSIONAL ENGINEER

DESIGN STANDARDS ENGINEER — DATE 03/06/2026

CHIEF ENGINEER — DATE 04/08/2026

TABLE OF DIMENSIONS - TYPE S BEARINGS FOR STEEL BEAMS

Bearing Designation	Bearing Width W	Bearing Length L	Number of Internal Elastomer Layers n	h_{rt} (1)	Number of Steel Shims n_s	Bearing Total Thickness H	Side Retainer Assembly				
							Anchor Bolt Size	Dimensions			
								y	z	t	∅ d
S1-A	11"	8"	2	1 9/16"	3	1 7/8"	1" x 12"	2 1/8"	4"	1/2"	1 1/8"
S1-B	11"	8"	3	2 1/16"	4	2 15/32"					
S2-A	12"	9"	2	1 9/16"	3	1 7/8"					
S2-B	12"	9"	3	2 1/16"	4	2 15/32"					
S3-A	13"	10"	3	2 1/16"	4	2 15/32"					
S3-B	13"	10"	4	2 9/16"	5	3 3/32"					
S4-A	15"	11"	4	2 9/16"	5	3 3/32"	1 1/4" x 15"	2 1/4"	4 3/4"	1/2"	1 3/8"
S4-B	15"	11"	5	3 1/16"	6	3 11/16"					
S5-A	16"	12"	4	2 9/16"	5	3 3/32"					
S5-B	16"	12"	5	3 1/16"	6	3 11/16"					
S6-A	20"	13"	5	3 1/16"	6	3 11/16"	1 1/2" x 18"	2 3/4"	5 1/2"	3/4"	1 5/8"
S6-B	20"	13"	6	3 9/16"	7	4 9/32"					
S7-A	20"	15"	6	3 9/16"	7	4 9/32"					
S7-B	20"	15"	7	4 1/16"	8	4 29/32"					

NOTES:

(1) h_{rt} is defined as the summation of all internal elastomer thicknesses plus the thickness of the two external layers.

2. See Standard Drawing E 726-BEBP-05 for Type S bearing assembly details.

(3) Equivalent rolled angle shape with stiffeners may be used in lieu of welded plates.

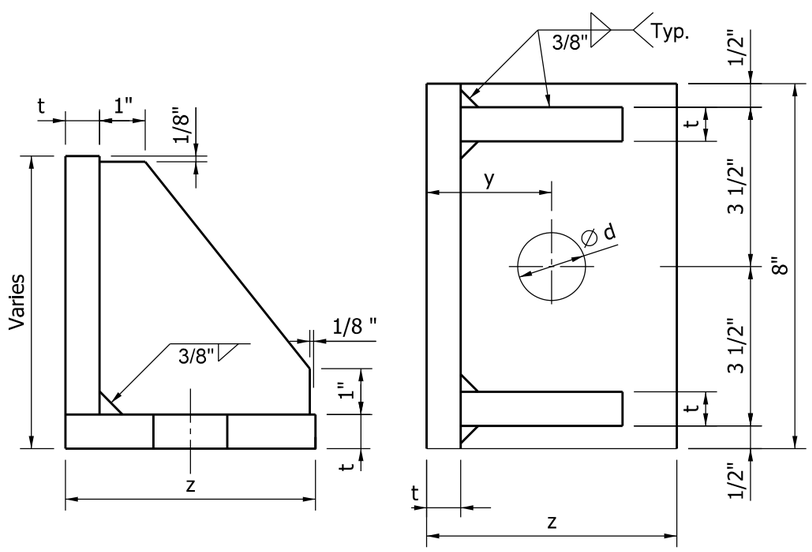

DETAIL A - SIDE RETAINER ASSEMBLY (3)

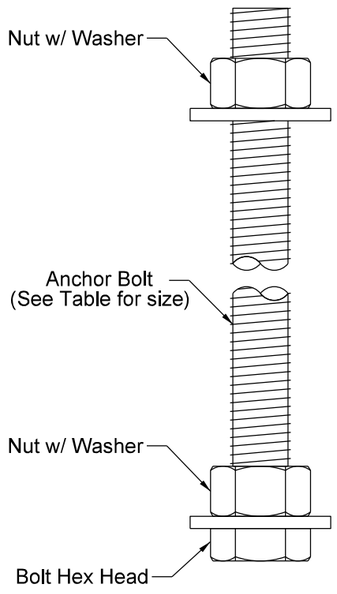

ANCHOR BOLT ASSEMBLY

INDIANA DEPARTMENT OF TRANSPORTATION

ELASTOMERIC BEARING ASSEMBLY
DETAILS FOR TYPE S
FOR STEEL BEAMS

SEPTEMBER 2026

STANDARD DRAWING NO. E 726-BEBP-06

ELIZABETH P. MOUSER
REGISTERED
No. 10200124
STATE OF INDIANA
PROFESSIONAL ENGINEER

03/06/2026
DESIGN STANDARDS ENGINEER — DATE

04/08/2026
CHIEF ENGINEER — DATE

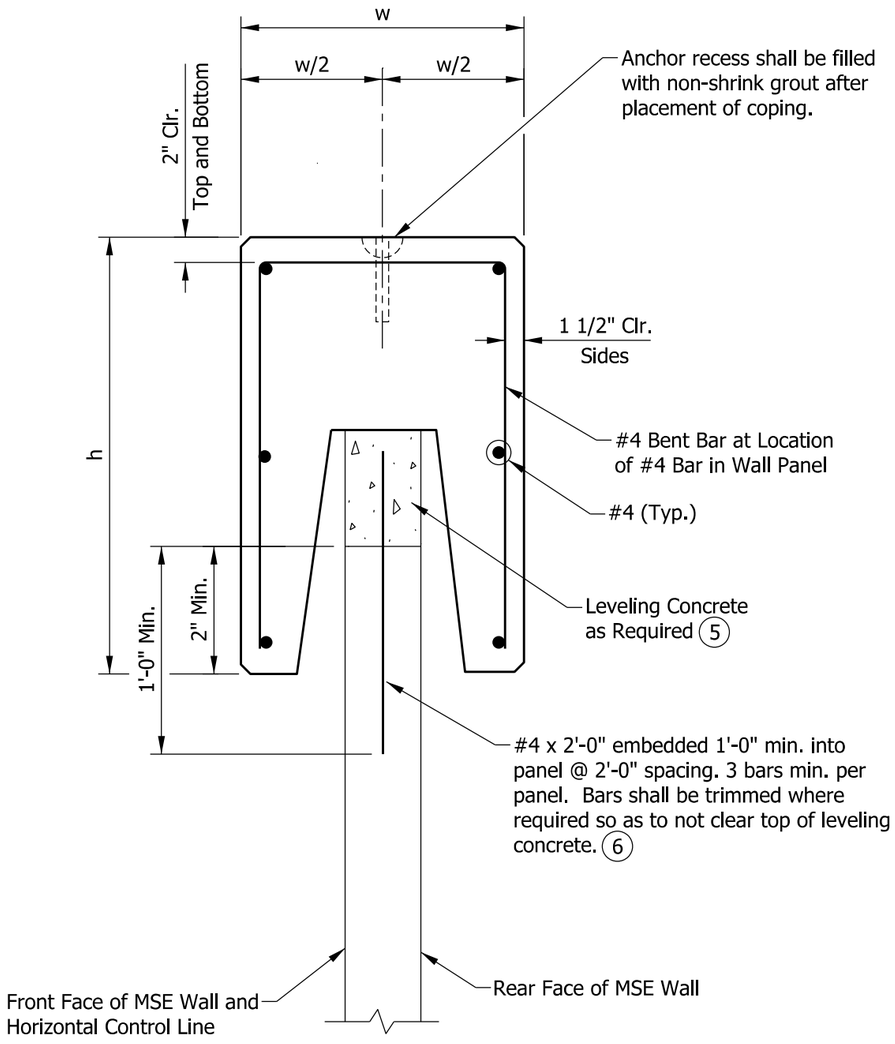

TYPICAL SECTION

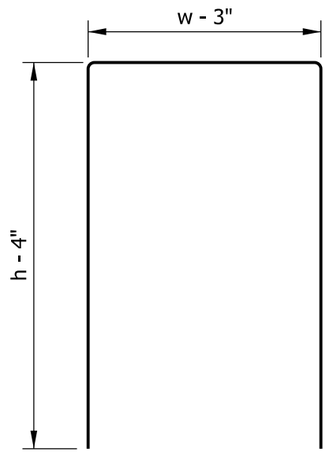

#4 BENT BAR

NOTES:

1. Precast coping unit length shall be 10'-0".
2. Reinforcing bar size, length, and spacing shall be determined by the manufacturer.
3. All chamfered edges shall be 3/4".
4. See Standard Drawing E 703-BRST-01 for reinforcing-bar bending details and notes.

(5) Leveling concrete is required when adjacent top panels do not provide a continuous surface on which to place the precast coping, e.g., stepped panels or rectangular panels on a sloping grade. Leveling concrete is not required when custom top panels provide a surface parallel to the finished grade.

(6) Use only when leveling concrete is required.

INDIANA DEPARTMENT OF TRANSPORTATION

MSE WALL
PRECAST CONCRETE COPING

SEPTEMBER 2013

STANDARD DRAWING NO. E 731-MSEW-01

ELIZABETH W. PHILLIPS
REGISTERED
No. 10200124
STATE OF INDIANA
PROFESSIONAL ENGINEER

/s/ Elizabeth W. Phillips 02/22/13
DESIGN STANDARDS ENGINEER DATE

/s/ Mark A. Miller 03/27/13
CHIEF ENGINEER DATE

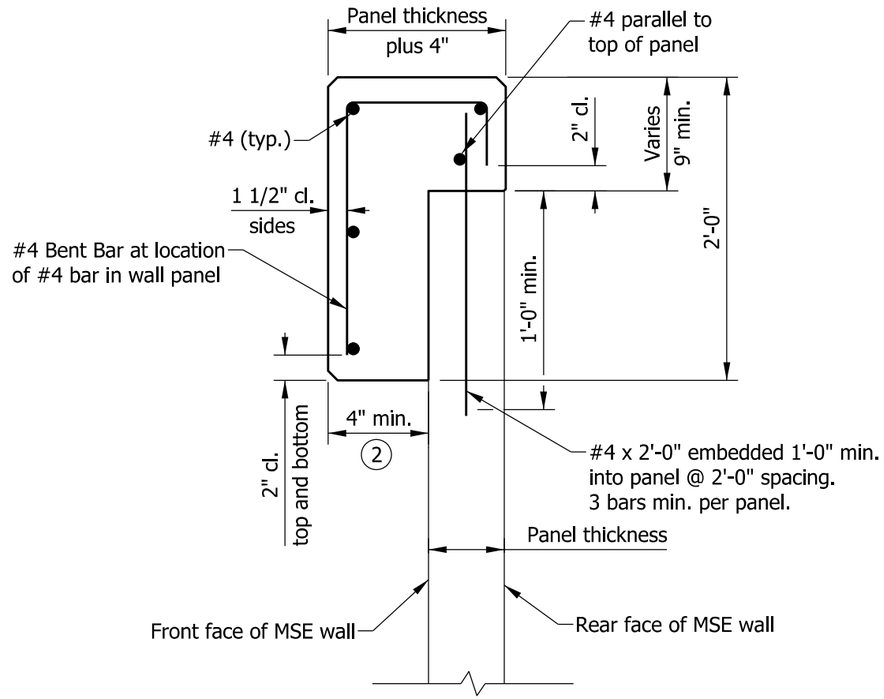

TYPICAL SECTION

NOTES

1. Coping joints shall coincide approximately with the panel joints. Reinforcing bars' ends shall be 2" short of near side of each joint.
2. The front face of a cast-in-place coping shall match the front face of a precast coping where used in conjunction.
3. All chamfered edges shall be 3/4".
4. See Standard Drawing E 703-BRST-01 for reinforcing-bar bending details and notes.

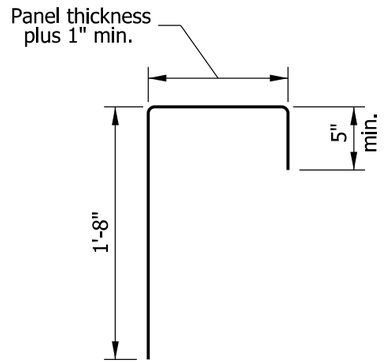

#4 BENT BAR

INDIANA DEPARTMENT OF TRANSPORTATION

MSE WALL
CAST-IN-PLACE CONCRETE COPING

SEPTEMBER 2012

STANDARD DRAWING NO. E 731-MSEW-02

RICHARD L. VanCLEAVE
REGISTERED
No. 9750
STATE OF INDIANA
PROFESSIONAL ENGINEER

/s/ Richard L. VanCleave 09/04/12
SUPERVISOR, ROADWAY STANDARDS DATE

/s/ Mark A. Miller 09/04/12
CHIEF ENGINEER DATE

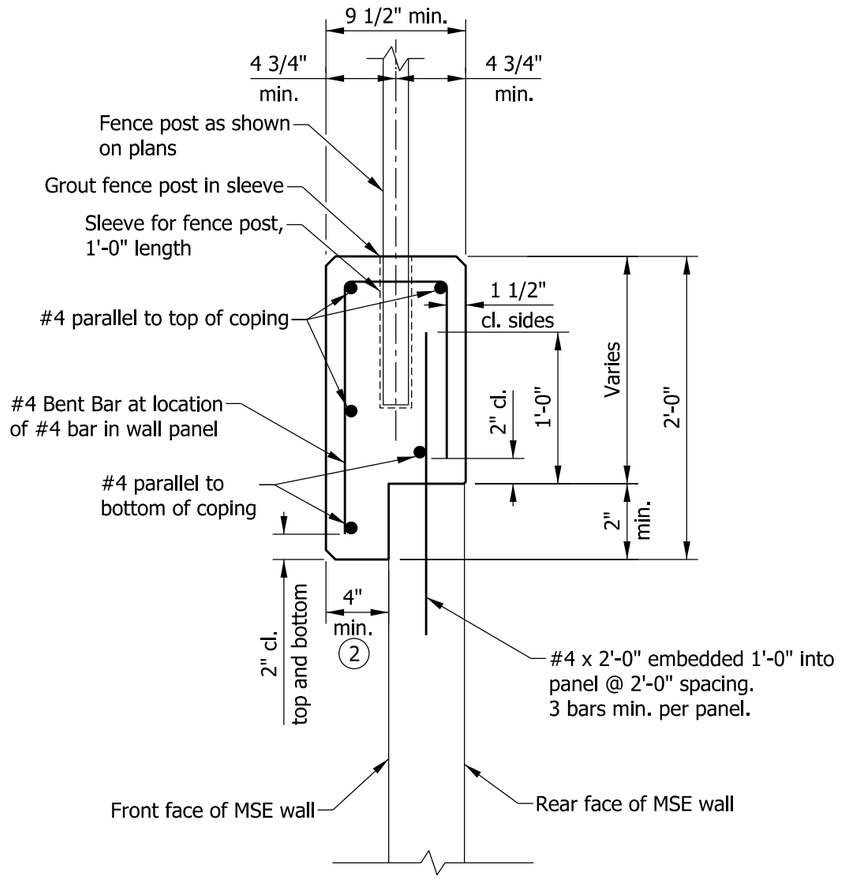

TYPICAL SECTION

NOTES

1. Coping joints shall coincide approximately with the panel joints. Reinforcing bars' ends shall be 2" short of near side of each joint.
2. The front face of a cast-in-place coping shall match the front face of a precast coping where used in conjunction.
3. All chamfered edges shall be 3/4".
4. See Standard Drawing E 703-BRST-01 for reinforcing-bar bending details and notes.

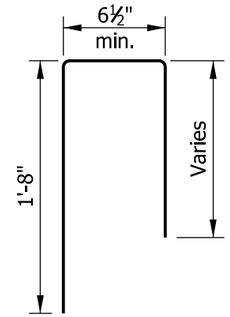

#4 BENT BAR

INDIANA DEPARTMENT OF TRANSPORTATION

MSE WALL
CAST-IN-PLACE CONCRETE COPING
WITH PEDESTRIAN FENCE

SEPTEMBER 2012

STANDARD DRAWING NO. E 731-MSEW-03

RICHARD L. VanCLEAVE REGISTERED No. 9750 STATE OF INDIANA PROFESSIONAL ENGINEER

/s/ Richard L. Van Cleave 09/04/12
SUPERVISOR, ROADWAY STANDARDS DATE

/s/ Mark A. Miller 09/04/12
CHIEF ENGINEER DATE

INDEX

SHEET NO.	SUBJECT
1	Temporary Concrete Barrier Index Sheet
2	Temporary Concrete Barrier Dimensions
3	Temporary Concrete Barrier Details
4	Temporary Concrete Barrier Double Taper End Section
5	Anchored Temporary Concrete Barrier, Drop-In Anchor
6	Anchored Temporary Concrete Barrier, Ferrule Loop Insert

INDIANA DEPARTMENT OF TRANSPORTATION

TEMPORARY CONCRETE BARRIER
INDEX SHEET

SEPTEMBER 2019

STANDARD DRAWING NO. E 801-TCCB-01

5/2/2019
DESIGN STANDARDS ENGINEER DATE

6/5/2019
CHIEF ENGINEER DATE

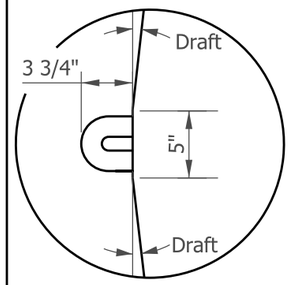

DETAIL "A"

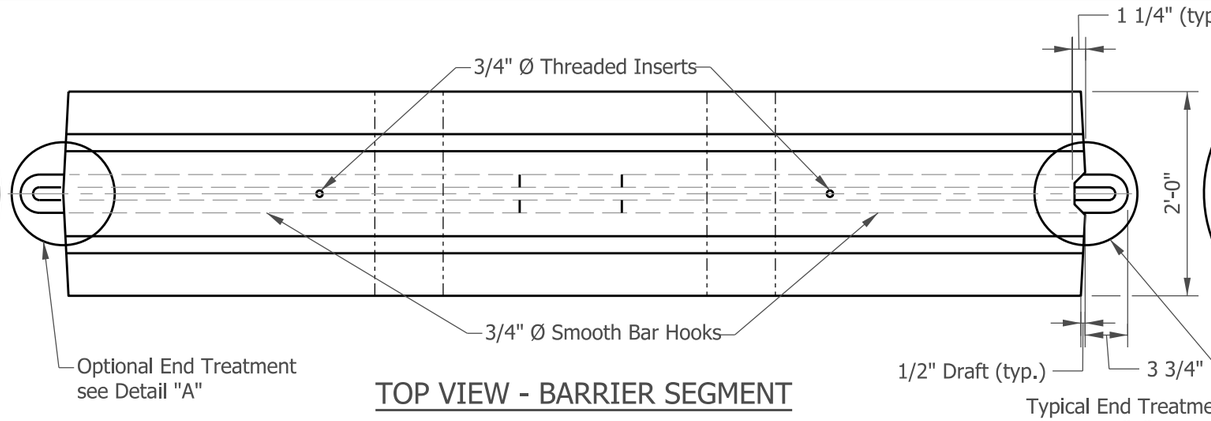

TOP VIEW - BARRIER SEGMENT

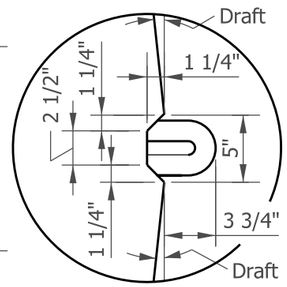

DETAIL "B"

NOTES:

1. For freeways and interstates, the maximum barrier flare rate and construction clear zone distance shall be based on 70 mph for the first run of barrier within the construction zone. For subsequent barrier placement, the barrier flare rates and construction clear zone distance shall be based on 70 mph unless otherwise shown on the plans.
2. The barrier taper flare rate and construction clear zone distance are shown in Table No. 1. Construction clear zone distance is measured from the through travel lane. The barrier taper flare rate shall be as shown or flatter.
3. The dimensions of the lifting slots are subject to adjustment as necessary to accommodate handling equipment.
4. For additional connection details see Standard Drawing E 801-TCCB-03.

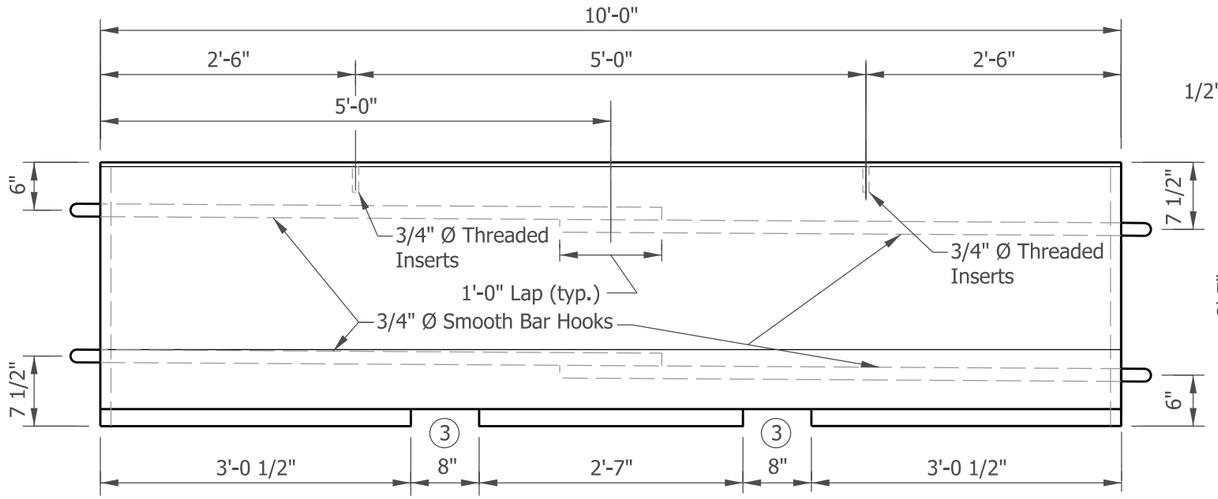

FRONT VIEW - BARRIER SEGMENT

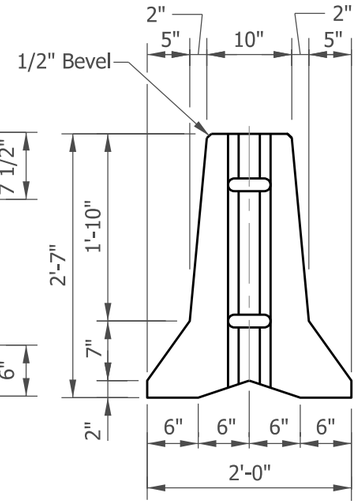

END VIEW

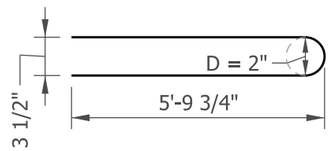

3/4" Ø x 11'-8"
SMOOTH BAR HOOKS

TABLE NO. 1		
Construction Zone Design Speed	Barrier Taper Flare Rate	Construction Clear Zone Distance
70 mph	20:1	30
60 mph	18:1	30
55 mph	16:1	23
50 mph	14:1	16
45 mph	12:1	16
40 mph	10:1	13
≤ 35 mph	10:1	13

INDIANA DEPARTMENT OF TRANSPORTATION

TEMPORARY CONCRETE BARRIER DIMENSIONS AND FLARE RATES

SEPTEMBER 2024

STANDARD DRAWING NO. E 801-TCCB-02

ELIZABETH P. MOUSER
REGISTERED
No. 10200124
STATE OF INDIANA
PROFESSIONAL ENGINEER

04/09/2024
DESIGN STANDARDS ENGINEER — DATE

04/17/2024
CHIEF ENGINEER — DATE

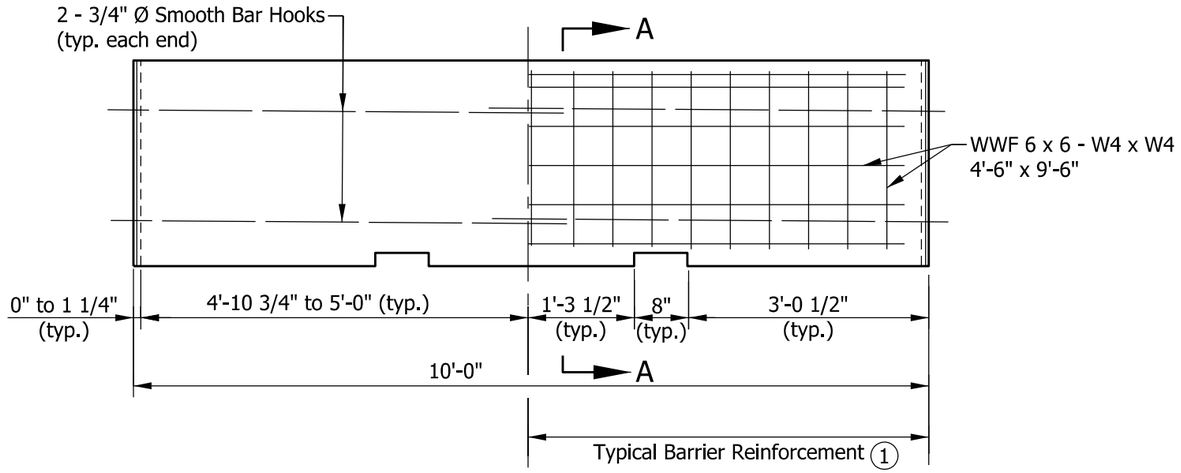

REINFORCEMENT DETAILS

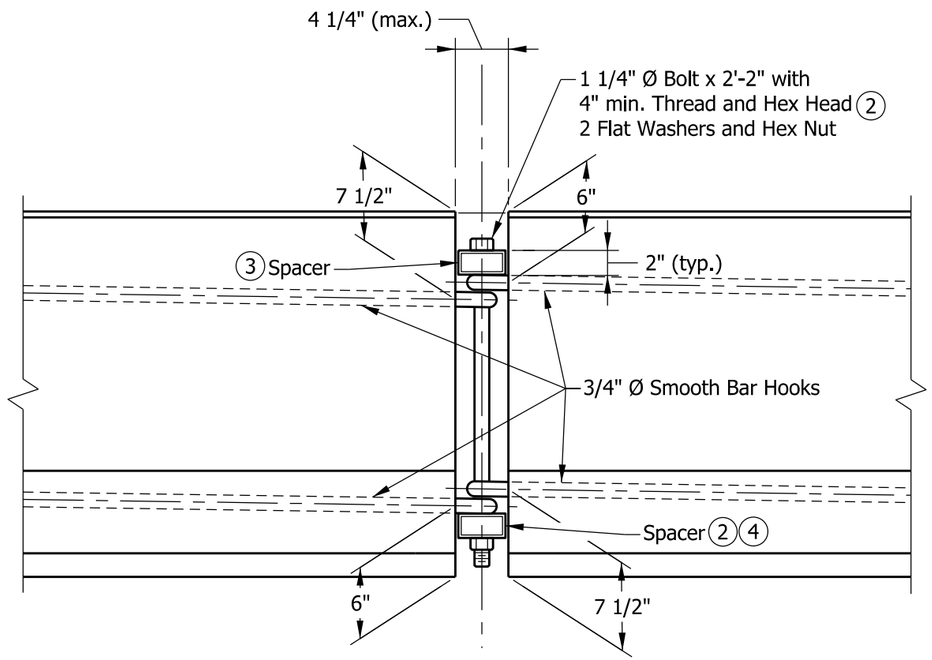

FRONT VIEW

CONNECTION DETAIL

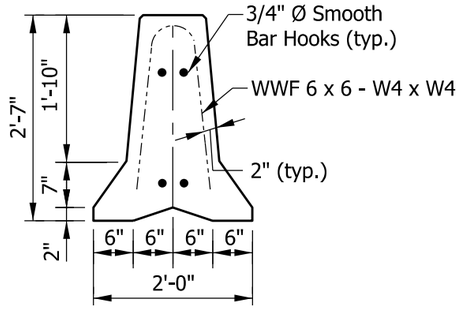

SECTION A-A (1)

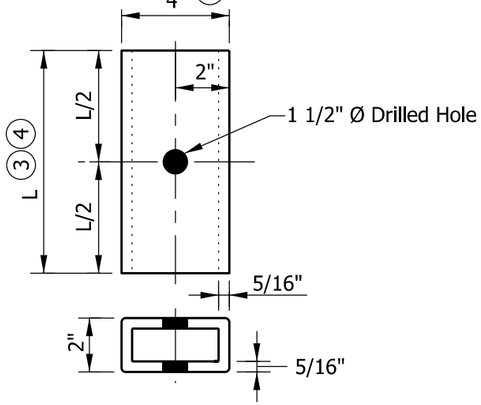

SPACER DETAIL

NOTES:

(1) Section A-A shows reinforcement with welded wire fabric. The WWF may be bent to the shape of the wall.

(2) Hex nut may be tack welded to bottom spacer to facilitate installation and removal. Bolts shall be torqued only to tight condition. Clearance between the spacer and the ends of the barrier shall allow angular deflection at the joints to allow flare rate 11:1 or flatter.

(3) Top spacer TS 4" x 2" x 5/16" x 10" long.

(4) Bottom spacer TS 4" x 2" x 5/16" x 1'-4" long.

5. Where necessary to meet short radius curving alignment, the shorter top spacer (10") may be substituted for the standard bottom spacer (16").

6. For additional connection details see Standard Drawing E 801-TCCB-02.

(7) Where very short radius curving alignment is encountered, spacers may be TS 3" x 2" x 1/4" x the appropriate length as shown above.

8. In lieu of the connection detail shown, the J-J Hook temporary barrier connection of Easi-Set Industries as described in FHWA acceptance letter B-52 of March 26, 1999 may be used.

INDIANA DEPARTMENT OF TRANSPORTATION

TEMPORARY CONCRETE BARRIER DETAILS

SEPTEMBER 2019

STANDARD DRAWING NO. E 801-TCCB-03

ELIZABETH W. PHILLIPS REGISTERED No. 10200124 STATE OF INDIANA PROFESSIONAL ENGINEER

5/2/2019
DESIGN STANDARDS ENGINEER — DATE

6/5/2019
CHIEF ENGINEER — DATE

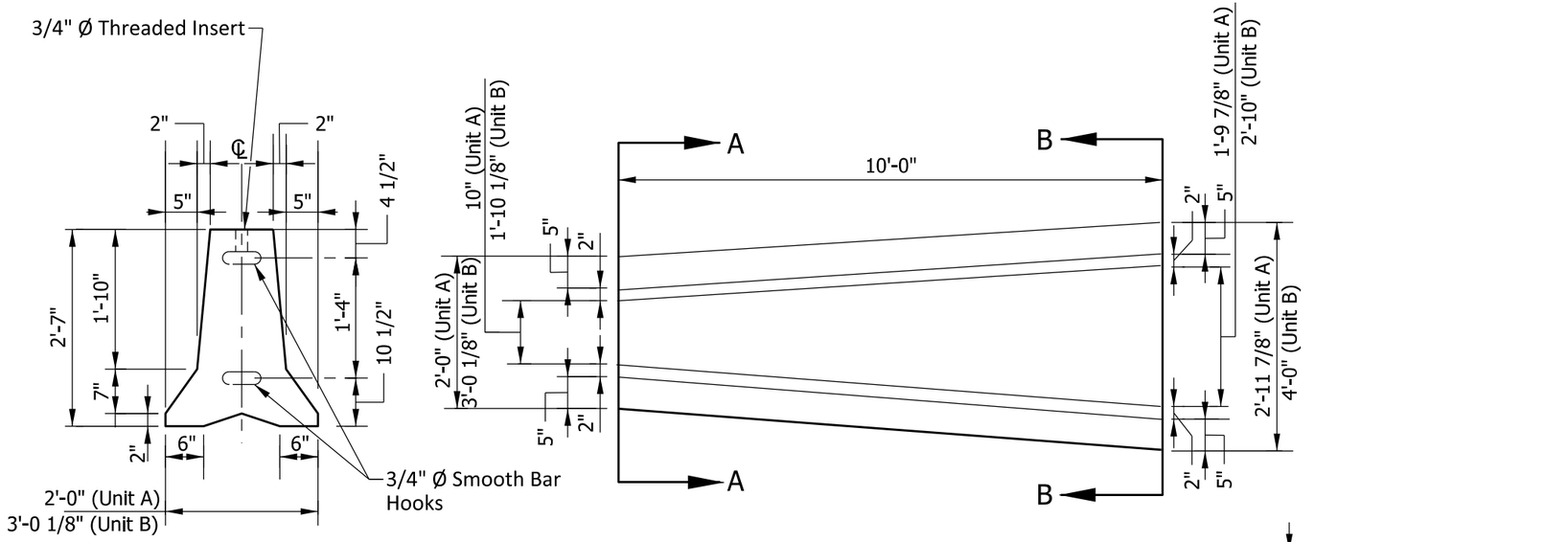

END VIEW A-A

TOP VIEW
UNIT A OR UNIT B

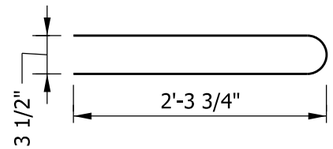

3/4" Ø x 4'-5 1/2"
SMOOTH BAR HOOKS

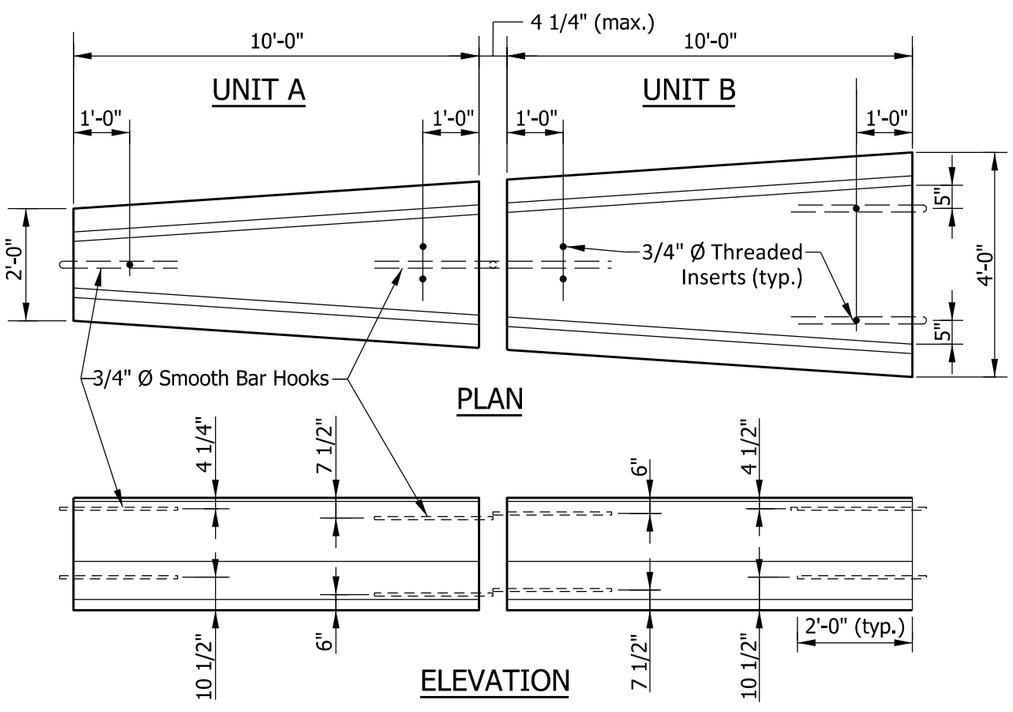

DOUBLE TAPER END SECTION ASSEMBLY
(Showing location of inserts and bar hooks)

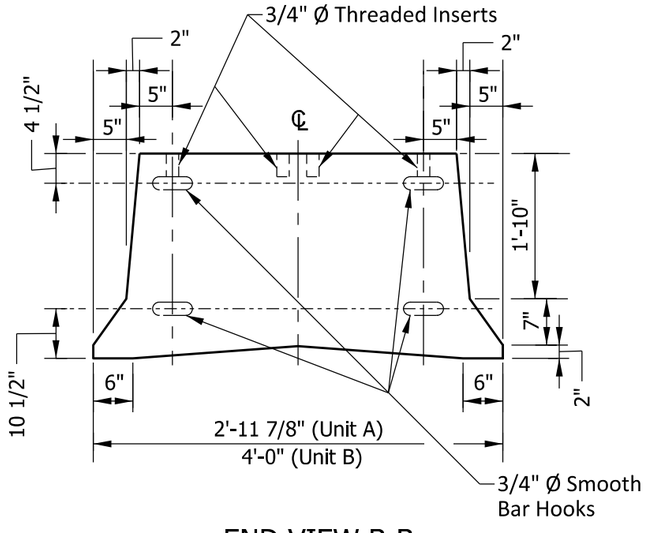

END VIEW B-B

NOTES:

1. For connection details between Units A and B, see Standard Drawing E 801-TCCB-03.
2. Extreme ends of the double taper end section assembly require a 1 1/4" Ø bolt x 2'-3 1/2" (4" min. thread, hex head and hex nut) for connecting to adjacent temporary concrete barriers.

INDIANA DEPARTMENT OF TRANSPORTATION

TEMPORARY CONCRETE BARRIER
DOUBLE TAPER END SECTION

SEPTEMBER 2019

STANDARD DRAWING NO. E 801-TCCB-04

ELIZABETH W. PHILLIPS
REGISTERED
No. 10200124
STATE OF INDIANA
PROFESSIONAL ENGINEER

5/2/2019
DESIGN STANDARDS ENGINEER — DATE

6/5/2019
CHIEF ENGINEER — DATE

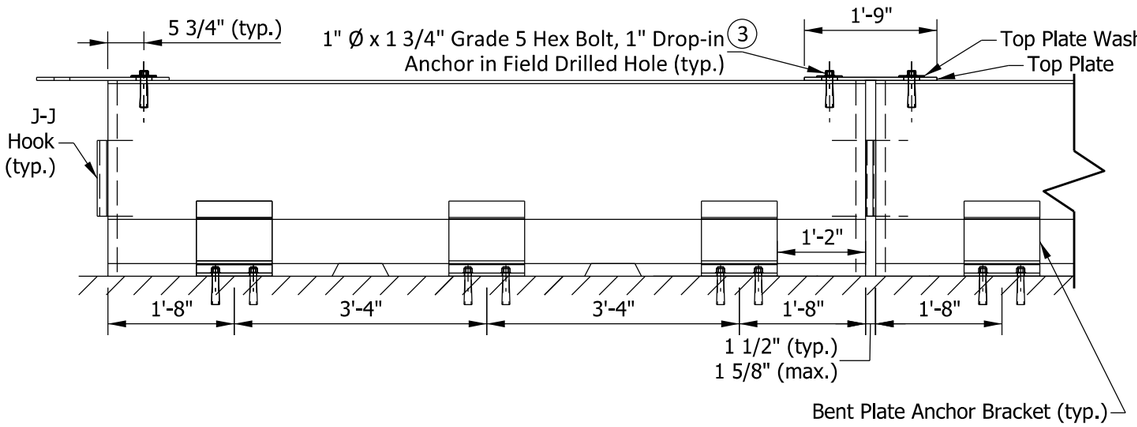

BARRIER FRONT VIEW

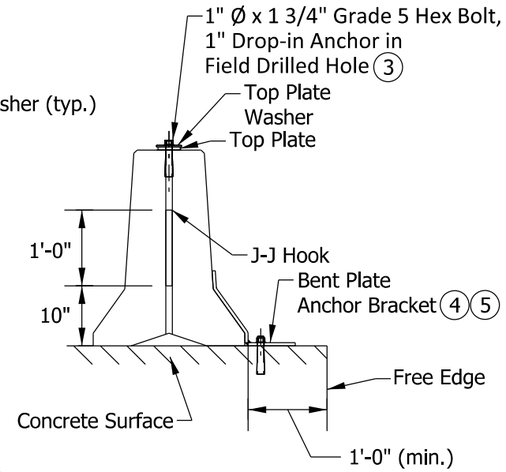

END VIEW

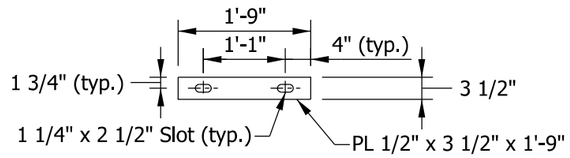

TOP PLATE DETAIL

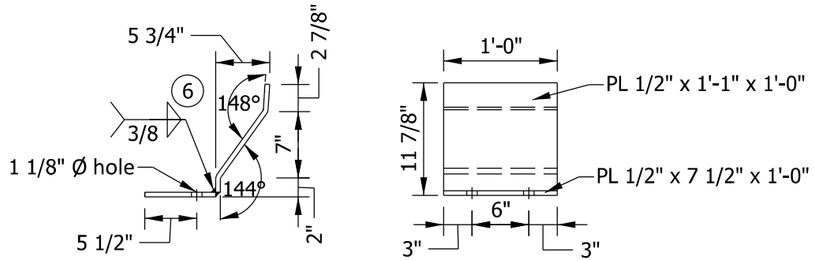

BENT PLATE ANCHOR BRACKET DETAIL

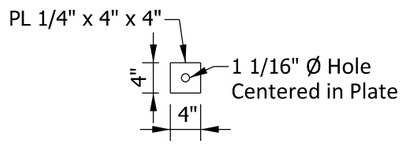

TOP PLATE WASHER DETAIL

NOTES:

1. All steel shall be ASTM A-36 hot rolled unless otherwise noted.
2. J-J Hooks are a product of Easi-Set Worldwide. Hooks shall be cast into the barrier in accordance with the manufacturer's recommendations.

(3) The drop-in anchor and bolt shall be tightened to the anchor manufacturer's specifications. The anchor shall have a minimum ultimate shear capacity of 26.4 kips.

(4) Bent plate anchor bracket shall be attached to a concrete surface using one of the following anchor systems. Minimum embedment shall be in accordance with the manufacturer's recommendations, but not less than 4 1/2 in.
- 1-in. threaded rod, grade 55 minimum, with washer and nut. Rod shall be installed using an approved epoxy chemical anchor system with a minimum ultimate shear capacity of 21.2 kips: or
- 1-in. diameter wedge anchor; or
- 1-in. nominal diameter drop-in anchor with 1-in. diameter, grade 5 hex bolt.

(5) When concrete will remain in place after anchoring is removed, the threaded rod anchoring system shall be used. The rod shall be completely removed, the hole shall be blown out to remove any moisture or debris, and the hole completely filled using the same epoxy that was used for anchoring the rod.

(6) The anchor bracket may be fabricated from a single bent plate instead of the welded two-plate detail shown.

INDIANA DEPARTMENT OF TRANSPORTATION

ANCHORED TEMPORARY CONCRETE BARRIER, DROP-IN ANCHOR

SEPTEMBER 2019

STANDARD DRAWING NO. E 801-TCCB-05

ELIZABETH W. PHILLIPS
REGISTERED
No. 10200124
STATE OF INDIANA
PROFESSIONAL ENGINEER

5/2/2019
DESIGN STANDARDS ENGINEER — DATE

6/5/2019
CHIEF ENGINEER — DATE

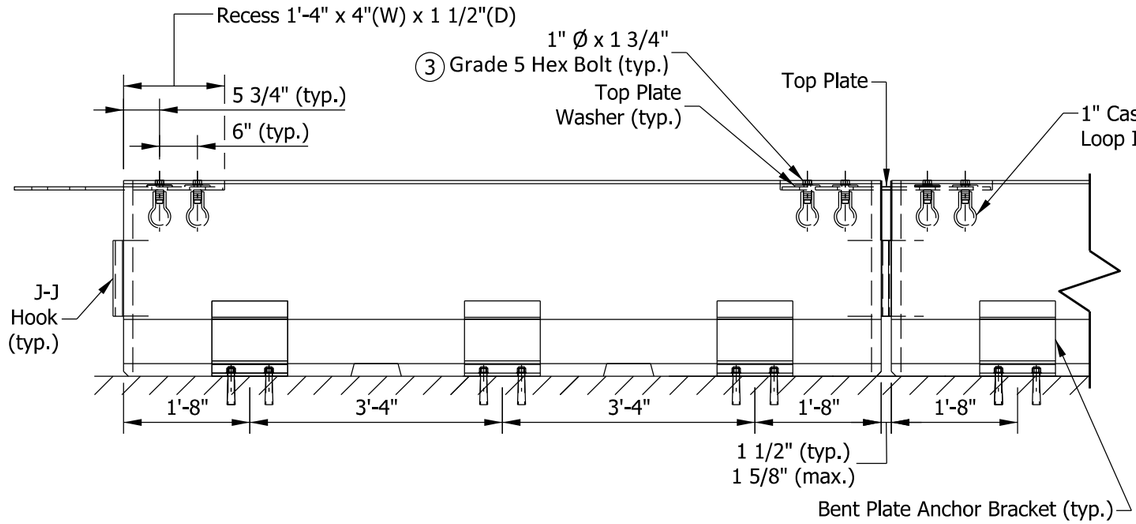

BARRIER FRONT VIEW

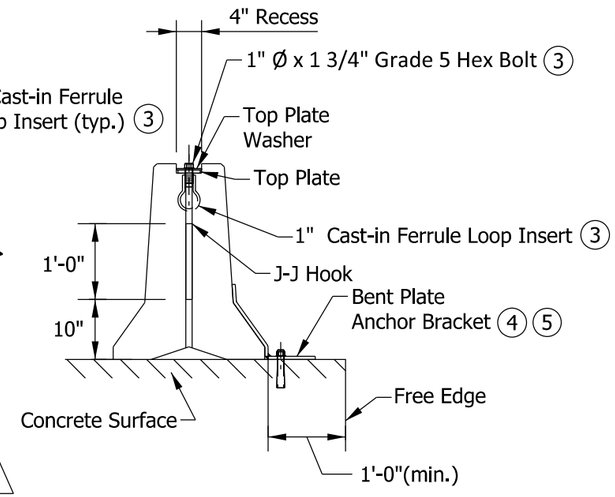

END VIEW

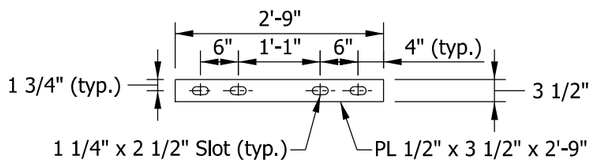

TOP PLATE DETAIL

NOTES:

1. All steel shall be ASTM A-36 hot rolled unless otherwise noted.
2. J-J Hooks are a product of Easi-Set Worldwide. Hooks shall be cast into the barrier in accordance with the manufacturer's recommendations.

(3) The bolt shall be installed snug tight in the cast-in ferrule loop insert. The insert shall have a minimum ultimate shear capacity of 12.1 kips.

(4) Bent plate anchor bracket shall be attached to a concrete surface using one of the following anchor systems. Minimum embedment shall be in accordance with the manufacturer's recommendations, but not less than 4 1/2 in.
- 1-in. threaded rod, grade 55 minimum, with washer and nut. Rod shall be installed using an approved epoxy chemical anchor system with a minimum ultimate shear capacity of 21.2 kips: or
- 1-in. diameter wedge anchor; or
- 1-in. nominal diameter drop-in anchor with 1-in. diameter, grade 5 hex bolt.

(5) When concrete will remain in place after anchoring is removed, the threaded rod anchoring system shall be used. The rod shall be completely removed, the hole shall be blown out to remove any moisture or debris, and the hole completely filled using the same epoxy that was used for anchoring the rod.

6. See E 801-TCCB-05 for bent plate anchor details, top plate washer details, and additional notes.

INDIANA DEPARTMENT OF TRANSPORTATION

ANCHORED TEMPORARY
CONCRETE BARRIER,
FERRULE LOOP INSERT
SEPTEMBER 2019

STANDARD DRAWING NO. E 801-TCCB-06

ELIZABETH W. PHILLIPS
REGISTERED
No. 10200124
STATE OF INDIANA
PROFESSIONAL ENGINEER

5/29/2019
DESIGN STANDARDS ENGINEER — DATE

6/5/2019
CHIEF ENGINEER — DATE

NOTES

1. See Standard Drawings E801-TCCO-02 and E 801-TCLG-01 for additional general notes and legend.
2. See Standard Drawing E 801-TCCO-02 for Entrance Detail.
3. See Standard Drawing E 801-TCCO-03 for Exit Detail.
4. See Standard Drawing E 801-TCDV-03 for the required length of taper section for channelizing devices for construction zone speed limits less than 55 MPH.

5 Appropriate channelizing devices:

a. For freeways - temporary concrete barrier- (see Standard Drawings E 801-TCCB-01 thru-04)

b. For non-freeways - cones or tubular markers (see Standard Drawing E 801-TCDV-01)

6. Area of Type A crossovers are shown on Standard Drawing E 801-TCLG-01 and area of Type B crossover is shown on Standard Drawing E 801-TCCO-05.

TEMPORARY CROSSOVERS

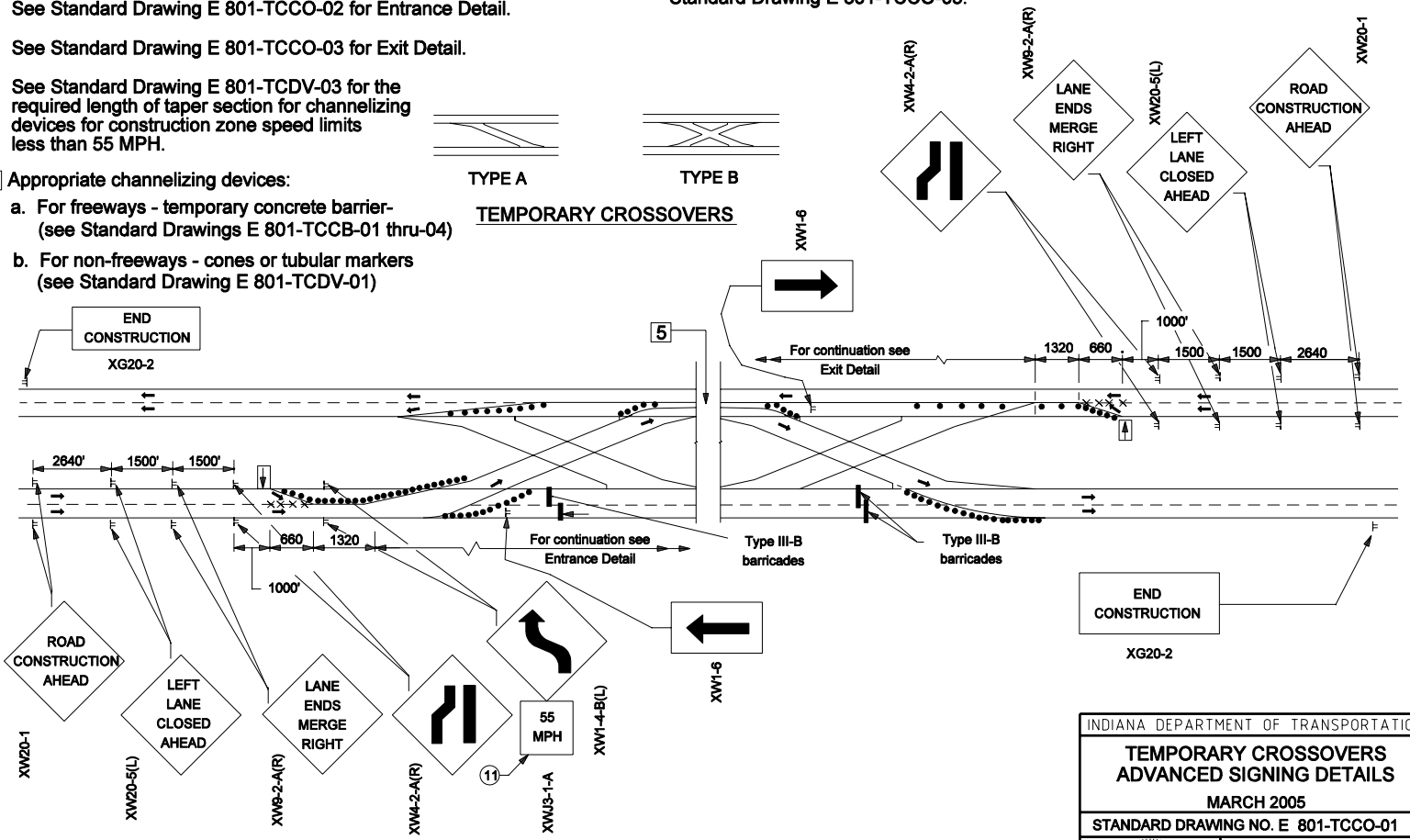

ADVANCE AND ENDING SIGNING DETAIL

INDIANA DEPARTMENT OF TRANSPORTATION

TEMPORARY CROSSOVERS ADVANCED SIGNING DETAILS

MARCH 2005

STANDARD DRAWING NO. E 801-TCCO-01

REGISTERED R. RICHARD L. VANCLEAVE No. 9750 STATE OF INDIANA PROFESSIONAL ENGINEER

DESIGN STANDARDS ENGINEER

/s/ Richard L. VanCleave 3-01-05
DESIGN STANDARDS ENGINEER DATE

/s/ Richard K. Smutzer 3-01-05
CHIEF HIGHWAY ENGINEER DATE

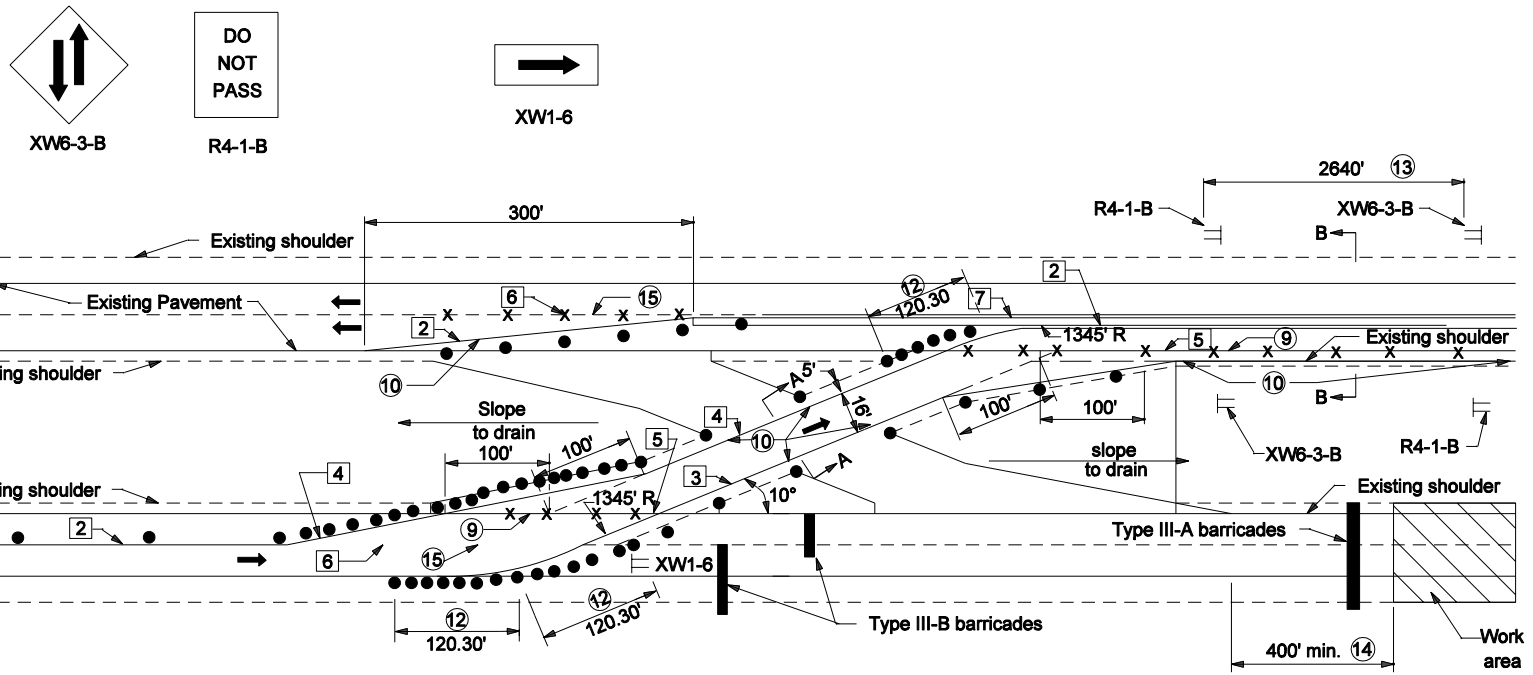

LEGEND

1. Temporary Pavement Marking, White, 4"
2. Temporary Pavement Marking, Yellow, 4"
3. Temporary Pavement Marking, White, 8"
4. Temporary Pavement Marking, Yellow, 8"
5. Line, Soild Yellow, 4", Remove
6. Line, Broken White, 4" Remove
7. Temporary Concrete Barrier - Freeways Channelizing Devices - Non-Freeway Multi-lane Divided Roadways.

NOTES:

1. Signs XW6-3-B and R4-1-B shall be used only with temporary channelizing devices.
2. See Standard Drawing E 801-TCCO-07 for Sections, A-A , B-B.
3. See Standard Drawings E 801-TCDV-04 thru E 801-TCDV-07 for barricade and construction sign mounting information.
4. For channelization devices see Standard Drawing E 801-TCDV-01.
5. See Standard Drawing E 801-TCDV-03 for required length of taper section for channelizing devices when construction zone speed limits are less than 55 MPH.
6. See Standard Drawing E 801-TCLG-01 for General Notes and additional Legend Symbols

INDIANA DEPARTMENT OF TRANSPORTATION

TEMPORARY CROSSOVERS ENTRANCE DETAIL

MARCH 2006

STANDARD DRAWING NO. E 801-TCCO-02

RICHARD L. VANCLEAVE REGISTERED No. 9750 STATE OF INDIANA PROFESSIONAL ENGINEER

DESIGN STANDARDS ENGINEER

/s/ Richard L. VanCleave 3-01-06
DESIGN STANDARDS ENGINEER DATE

/s/ Richard K. Smutzer 3-01-06
CHIEF HIGHWAY ENGINEER DATE

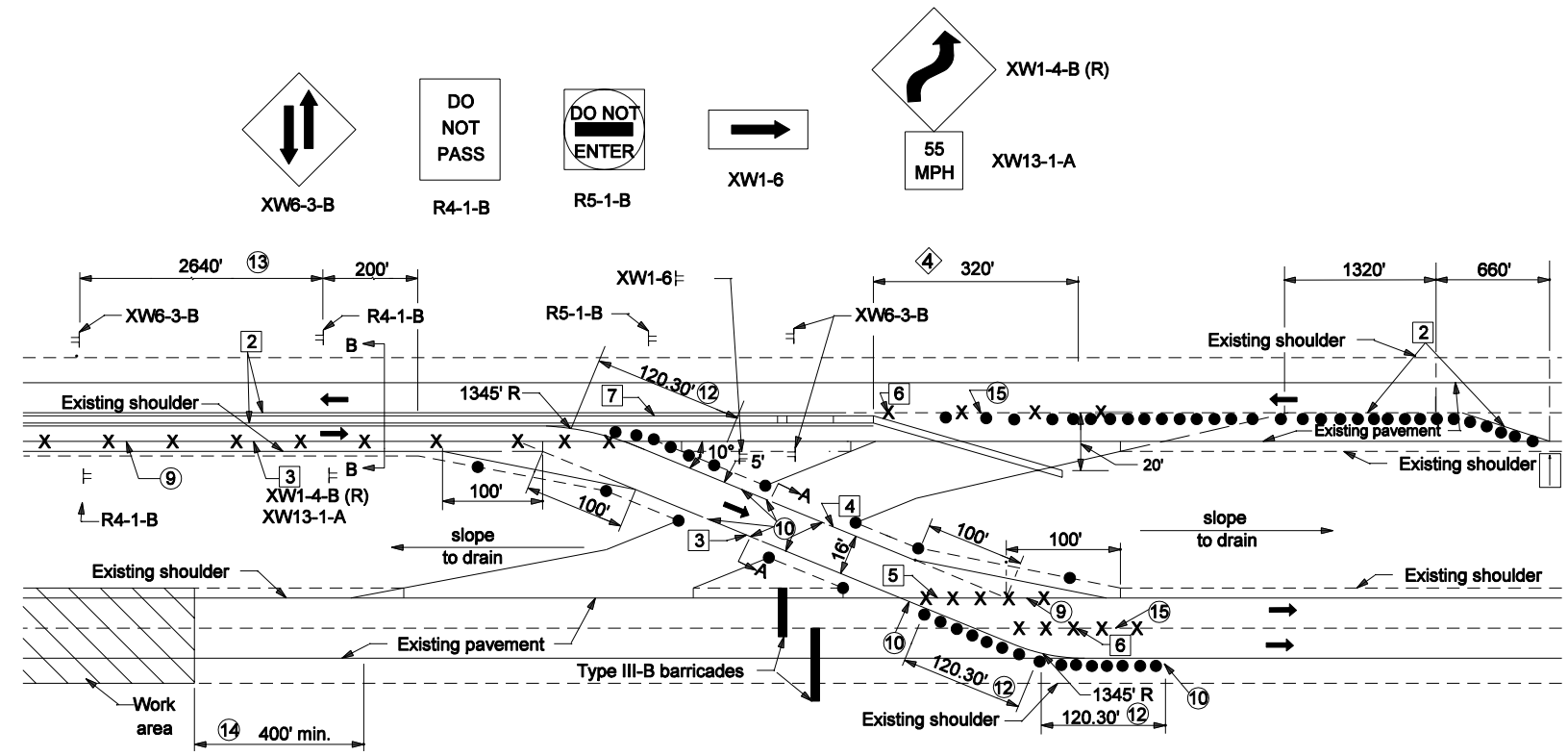

NOTES

1. Signs XW6-3-B and R4-1-B shall be used only with temporary channelizing devices.
2. See Standard Drawing E 801-TCCO-07 for Sections, A-A, B-B.
3. See Standard Drawing E 801-TCDV-03 for required length of taper section for channelizing devices for construction zone speed limits less than 55 MPH.
4. Taper required when channelizing device is temporary concrete barrier, see Standard Drawing E 801-TCCB-01.
5. See Standard Drawing E 801-TCCO-02 for ☐ Legend.
6. See Standard Drawing E 801-TCLG-01 for General Notes and additional Legend Symbols.

INDIANA DEPARTMENT OF TRANSPORTATION

TEMPORARY CROSSOVERS EXIT DETAIL

MARCH 2006

STANDARD DRAWING NO. E 801-TCCO-03

RICHARD L. VanCLEAVE REGISTERED No. 9750 STATE OF INDIANA PROFESSIONAL ENGINEER

DESIGN STANDARDS ENGINEER

/s/ Richard L. VanCleave 3-01-06
DESIGN STANDARDS ENGINEER DATE

/s/ Richard K. Smutzer 3-01-06
CHIEF HIGHWAY ENGINEER DATE

NOTES

1. See Standard Drawing E 801-TCCO-06 for Sections A-A and B-B.
2. Pave to drain.

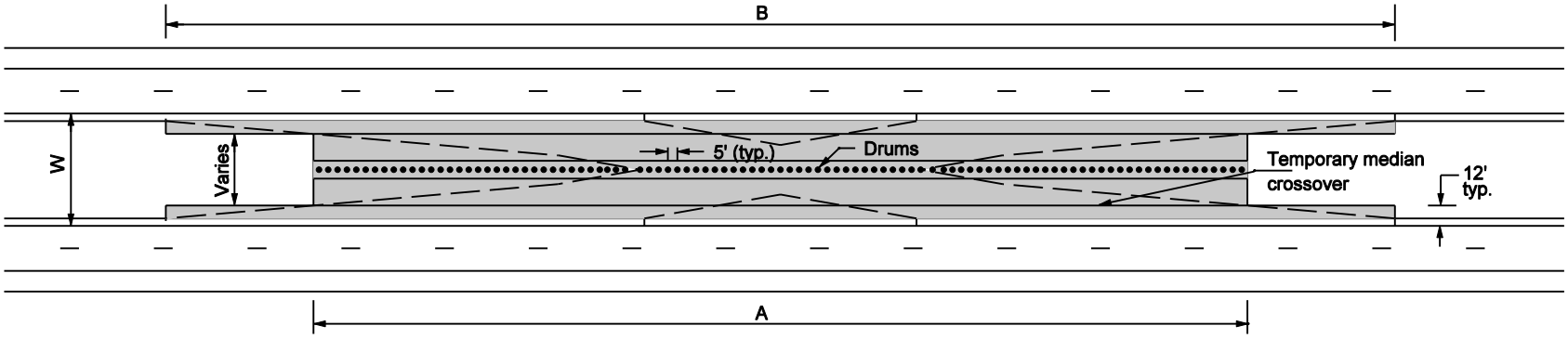

PAVING LIMITS AND DRUM CLOSURE

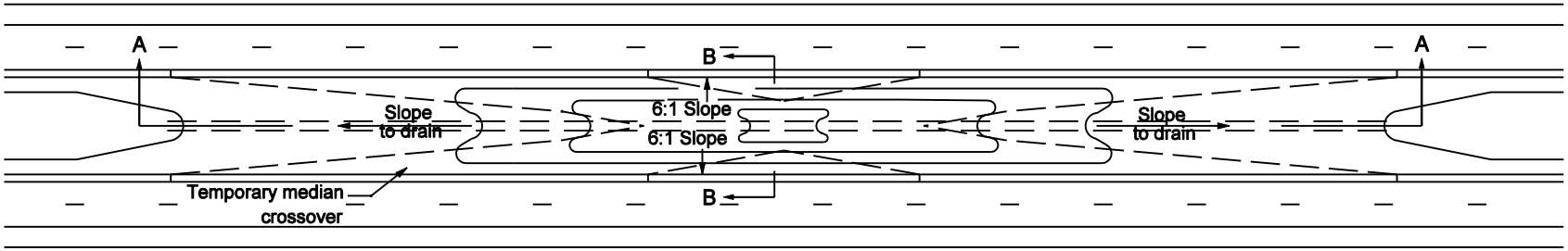

TYPE B CROSS OVER

Median Width W	Dimension A	Dimension B	Area of Paving strips
Feet	Feet	Feet	SQ. Yards
60	564	833	4310
50	505	774	3380
40	449	719	2605
36	427	696	2326
30	390	659	1930
26	371	640	1750

EARTH COVER CLOSURE

INDIANA DEPARTMENT OF TRANSPORTATION

TEMPORARY CROSSOVER TYPE B PAVING AND CLOSURE LAYOUT

SEPTEMBER 2003

STANDARD DRAWING NO. E 801-TCCO-05

RICHARD L. VanCLEAVE REGISTERED No. 9750 STATE OF INDIANA PROFESSIONAL ENGINEER

DESIGN STANDARDS ENGINEER

/s/ Richard L. VanCleave 9-02-03
DESIGN STANDARDS ENGINEER DATE

/s/ Richard K. Smutzer 9-02-03
CHIEF HIGHWAY ENGINEER DATE

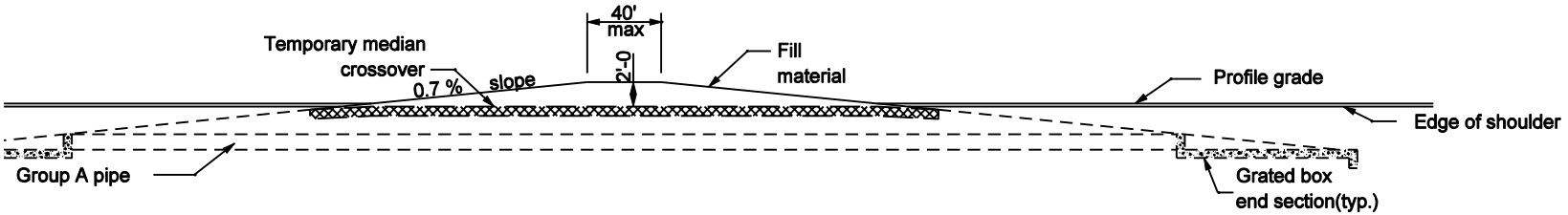

SECTION A-A

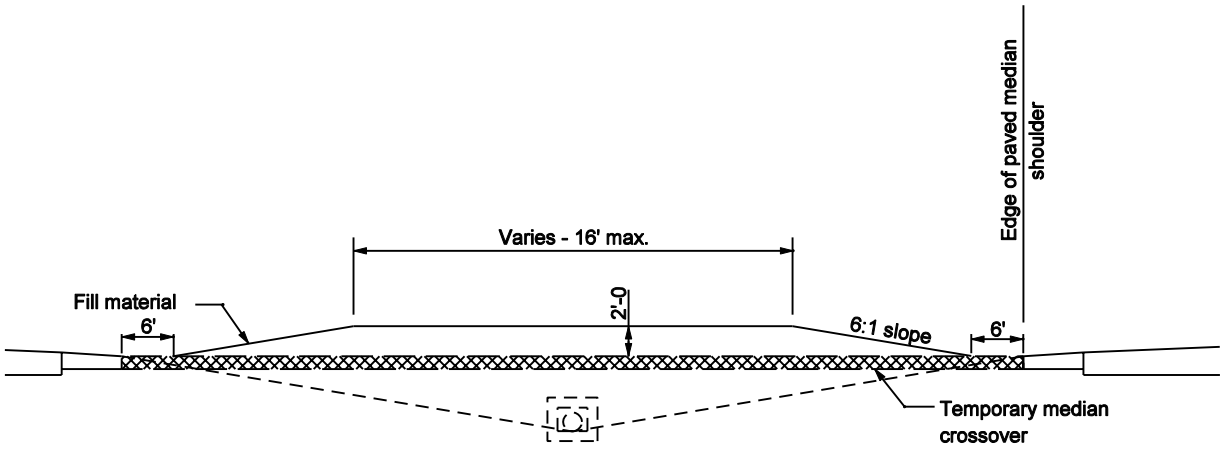

SECTION B-B

NOTES

1. See Standard Drawing E 801-TCCO-05 for temporary crossover paving and closure layout.

INDIANA DEPARTMENT OF TRANSPORTATION

CLOSURE OF TEMPORARY CROSSOVER

SEPTEMBER 2003

STANDARD DRAWING NO. E 801-TCCO-06

RICHARD L. VanCLEAVE REGISTERED No. 9750 STATE OF INDIANA PROFESSIONAL ENGINEER

DESIGN STANDARDS ENGINEER

/s/ Richard L. VanCleave 9-02-03
DESIGN STANDARDS ENGINEER DATE

/s/ Richard K. Smutzer 9-02-03
CHIEF HIGHWAY ENGINEER DATE

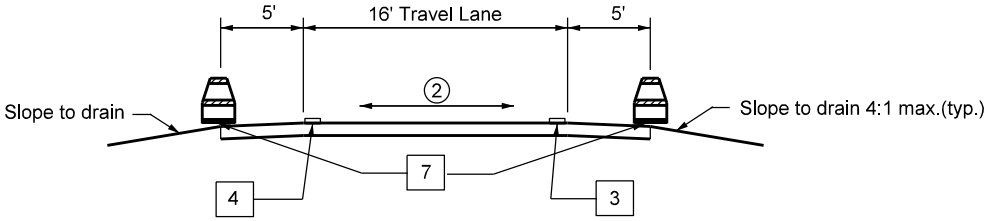

SECTION A-A

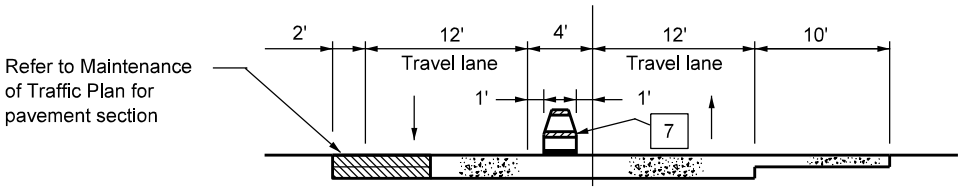

TRAFFIC MAINTENANCE SECTION

SECTION B-B

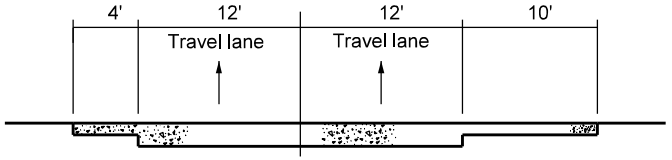

PRE CONSTRUCTION SECTION

GENERAL NOTES:

1. See Standard Drawing E 801-TCCO-02 for Legend.
2. Cross slope varies.
3. Positive drainage shall be provided to prevent ponding on the travel lanes.

INDIANA DEPARTMENT OF TRANSPORTATION

TEMPORARY CROSSOVER TYPICAL SECTIONS

MARCH 2006

STANDARD DRAWING NO. E 801-TCCO-07

RICHARD L. VanCLEAVE REGISTERED No. 9750 STATE OF INDIANA PROFESSIONAL ENGINEER

DESIGN STANDARDS ENGINEER

/s/ Richard L. VanCleave 3-01-06
DESIGN STANDARDS ENGINEER DATE

/s/ Richard K. Smutzer 3-01-06
CHIEF HIGHWAY ENGINEER DATE

GENERAL NOTES:

1. Signing pattern typical both sides of roadway, for each direction of travel.
2. See Standard Drawing E 801-TCDV-02 for tubular marker details.

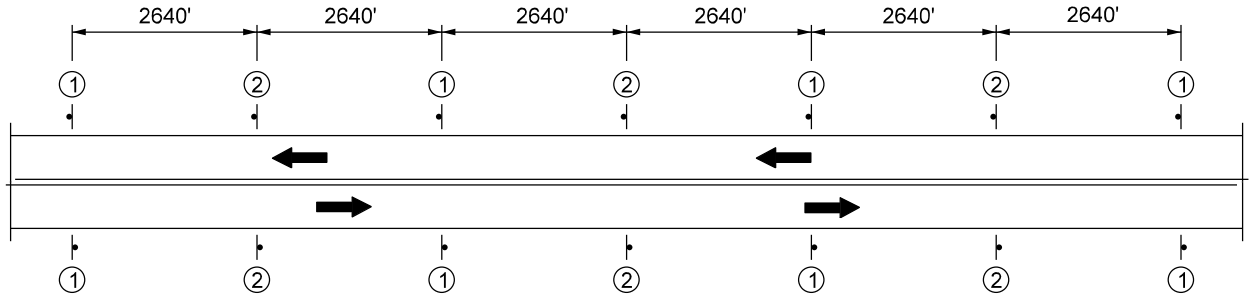

CONSTRUCTION SIGNS LOCATION DETAIL

LEGEND

① R4-1-B "Do Not Pass"

② XW6-3 two-way traffic symbol

◯ Tubular markers

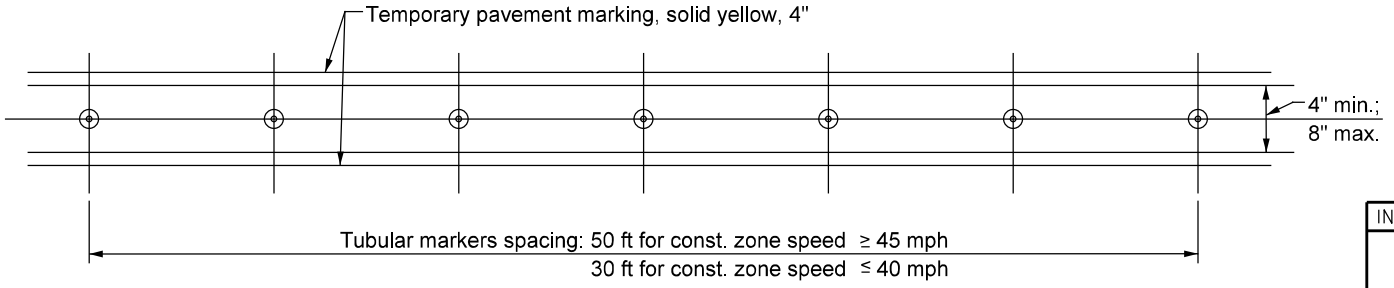

TUBULAR MARKERS ALONG CENTERLINE OF PAVEMENT LAYOUT

TWO LANE, TWO WAY
OPPOSING TRAFFIC

INDIANA DEPARTMENT OF TRANSPORTATION

TUBULAR MARKER DELINEATION

MARCH 2006

STANDARD DRAWING NO. E 801-TCCO-08

RICHARD L. VanCLEAVE REGISTERED No. 9750 STATE OF INDIANA PROFESSIONAL ENGINEER

DESIGN STANDARDS ENGINEER

/s/ Richard L. VanCleave 3-01-06
DESIGN STANDARDS ENGINEER DATE

/s/ Richard K. Smutzer 3-01-06
CHIEF HIGHWAY ENGINEER DATE

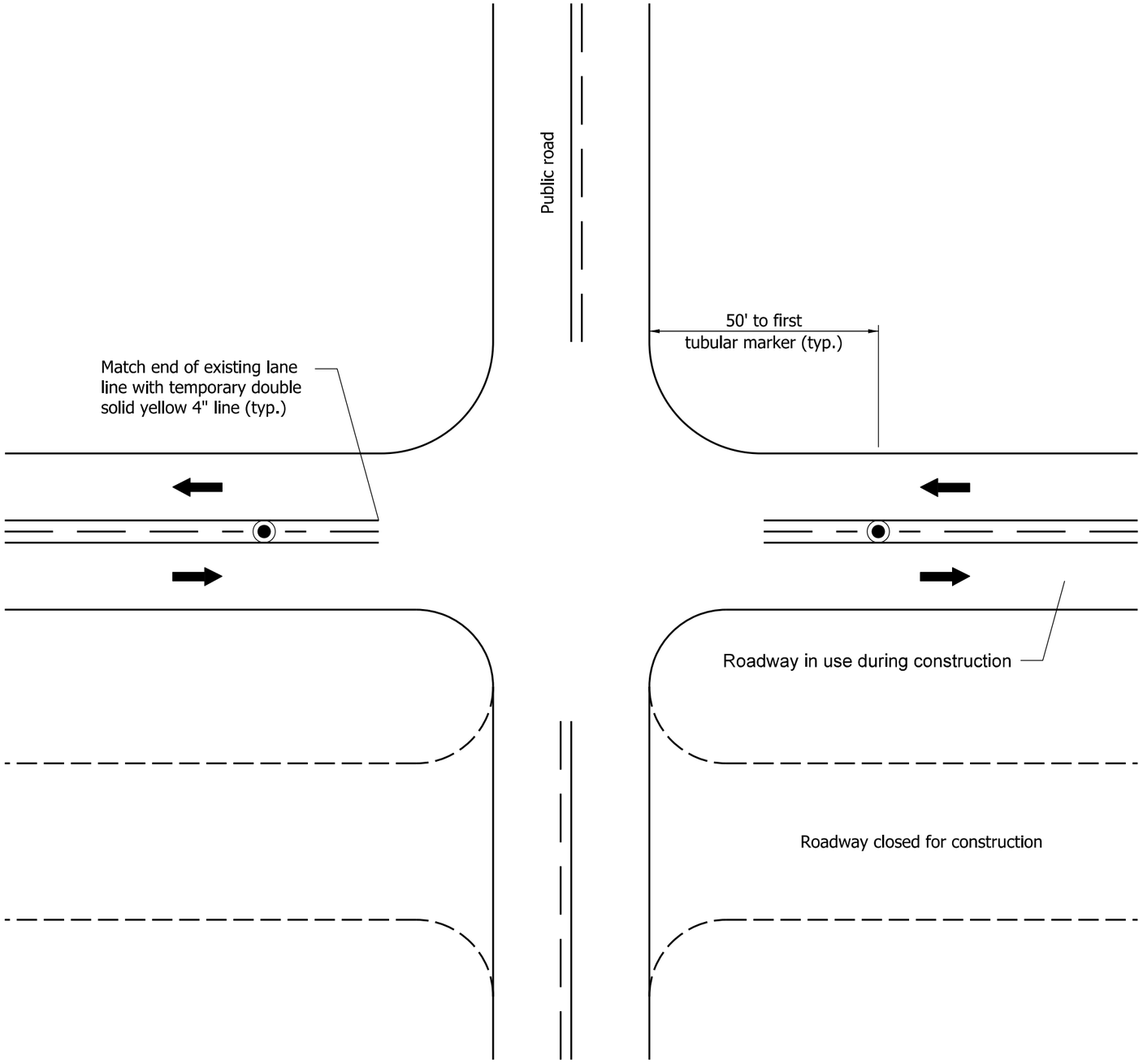

GENERAL NOTES:

1. See Standard Drawing E 801-TCDV-02 for tubular marker details.

LEGEND

Tubular markers

INDIANA DEPARTMENT OF TRANSPORTATION

TUBULAR MARKER DELINEATION AT INTERSECTION

SEPTEMBER 2007

STANDARD DRAWING NO. E 801-TCCO-09

RICHARD L. VanCLEAVE REGISTERED No. 9750 STATE OF INDIANA PROFESSIONAL ENGINEER

/s/ Richard L. VanCleave 09/04/07
DESIGN STANDARDS ENGINEER DATE

/s/ Mark A. Miller 09/04/07
CHIEF ENGINEER DATE

NOTES:

1. For detour route marker assemblies Ⓐ,Ⓑ,Ⓒ and Ⓓ see Standard Drawing E 801-TCDT-04.
2. See Standard Drawing E 801-TCLG-01 for standard notes and legend.

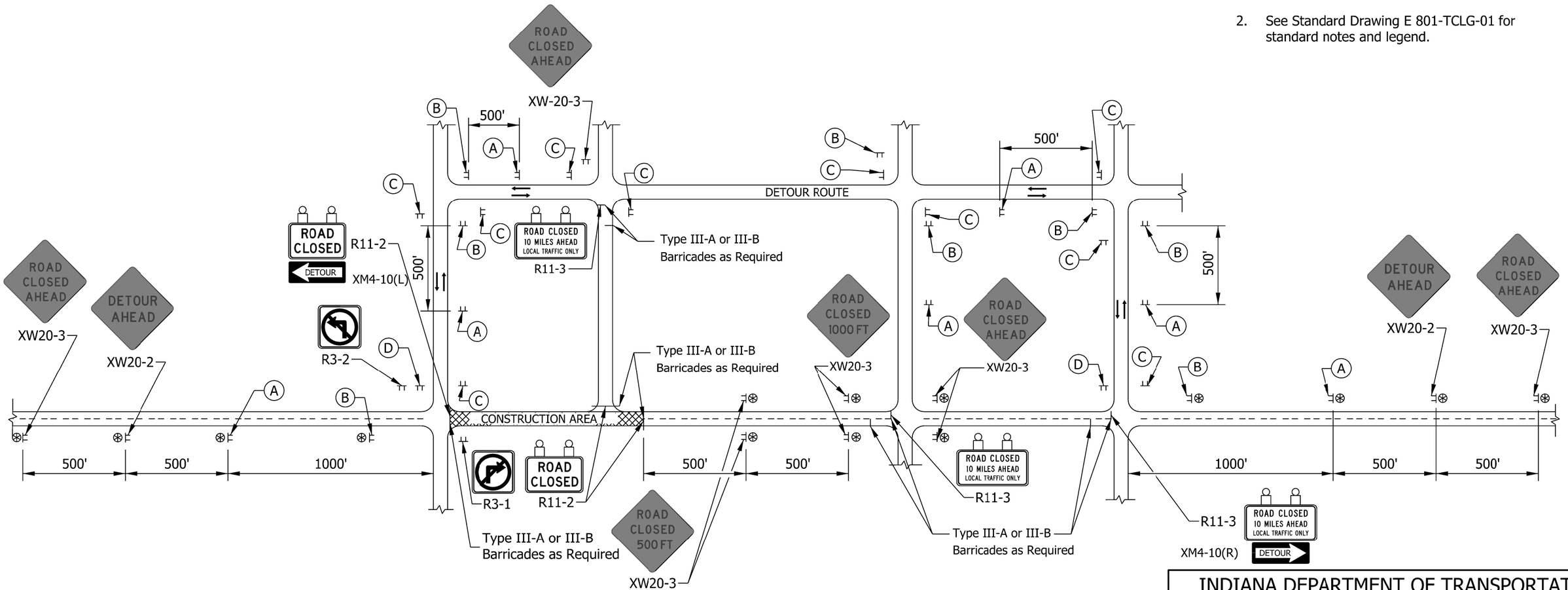

TYPICAL APPLICATIONS OF TRAFFIC CONTROL DEVICES FOR A RURAL DETOUR

INDIANA DEPARTMENT OF TRANSPORTATION

RURAL DETOUR

SEPTEMBER 2017

STANDARD DRAWING NO. E 801-TCDT-01

DAVID H. BORUFF REGISTERED No. 60900348 STATE OF INDIANA PROFESSIONAL ENGINEER

/s/ David H. Boruff 04/24/17
DESIGN STANDARDS ENGINEER DATE

/s/ John Leckie 04/25/17
CHIEF ENGINEER DATE

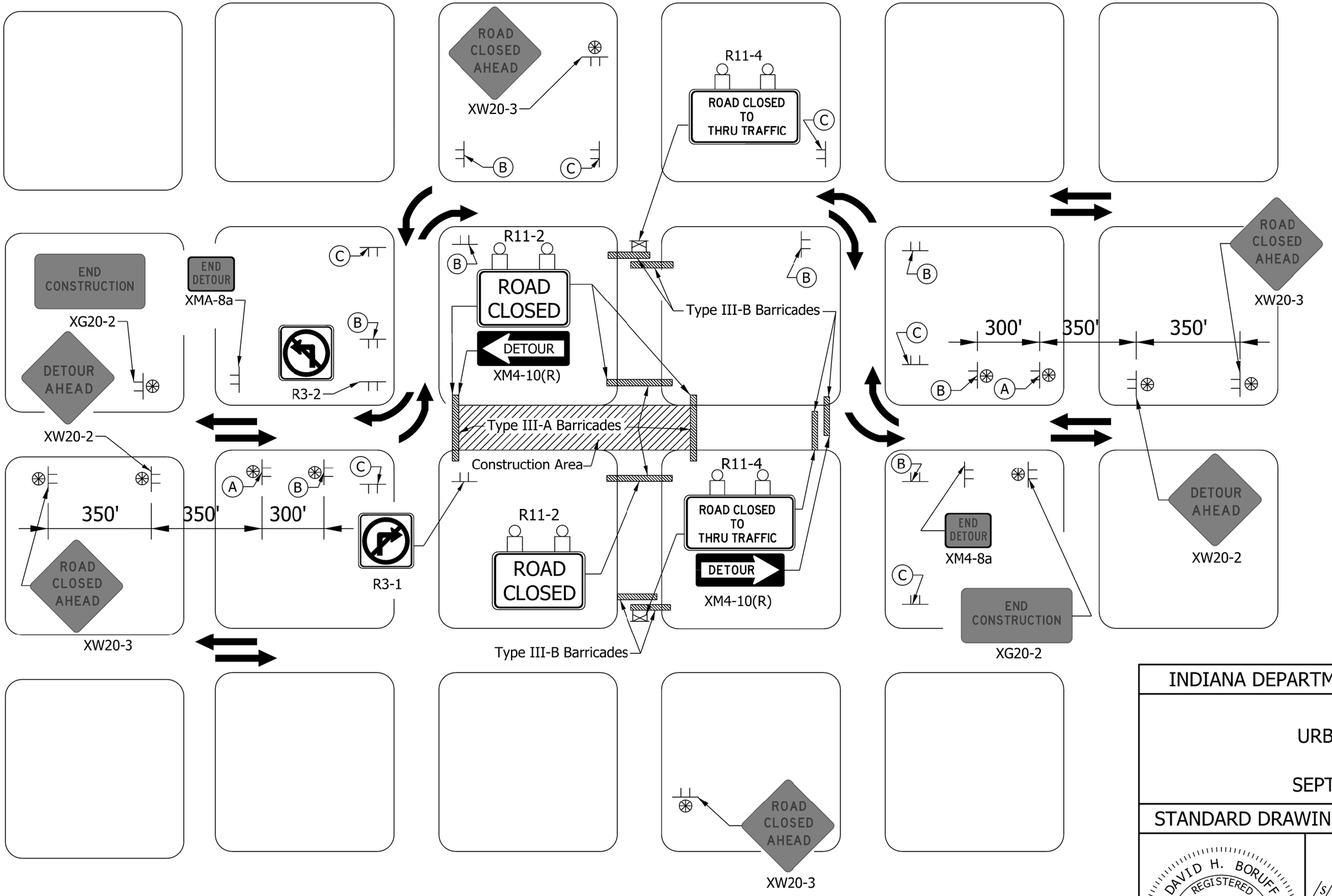

NOTES:

1. For detour marker assemblies (A), (B) and (C) see Standard Drawing E 801-TCDT-04.
2. See Standard Drawing E 801-TCLG-01 for standard notes and legend.

TYPICAL APPLICATIONS OF TRAFFIC CONTROL DEVICES FOR AN URBAN DETOUR

INDIANA DEPARTMENT OF TRANSPORTATION

URBAN DETOUR

SEPTEMBER 2017

STANDARD DRAWING NO. E 801-TCDT-02

DAVID H. BORUFF REGISTERED No. 60900348 STATE OF INDIANA PROFESSIONAL ENGINEER

/s/ David H. Boruff 04/24/17
DESIGN STANDARDS ENGINEER DATE

/s/ John Leckie 04/25/17
CHIEF ENGINEER DATE

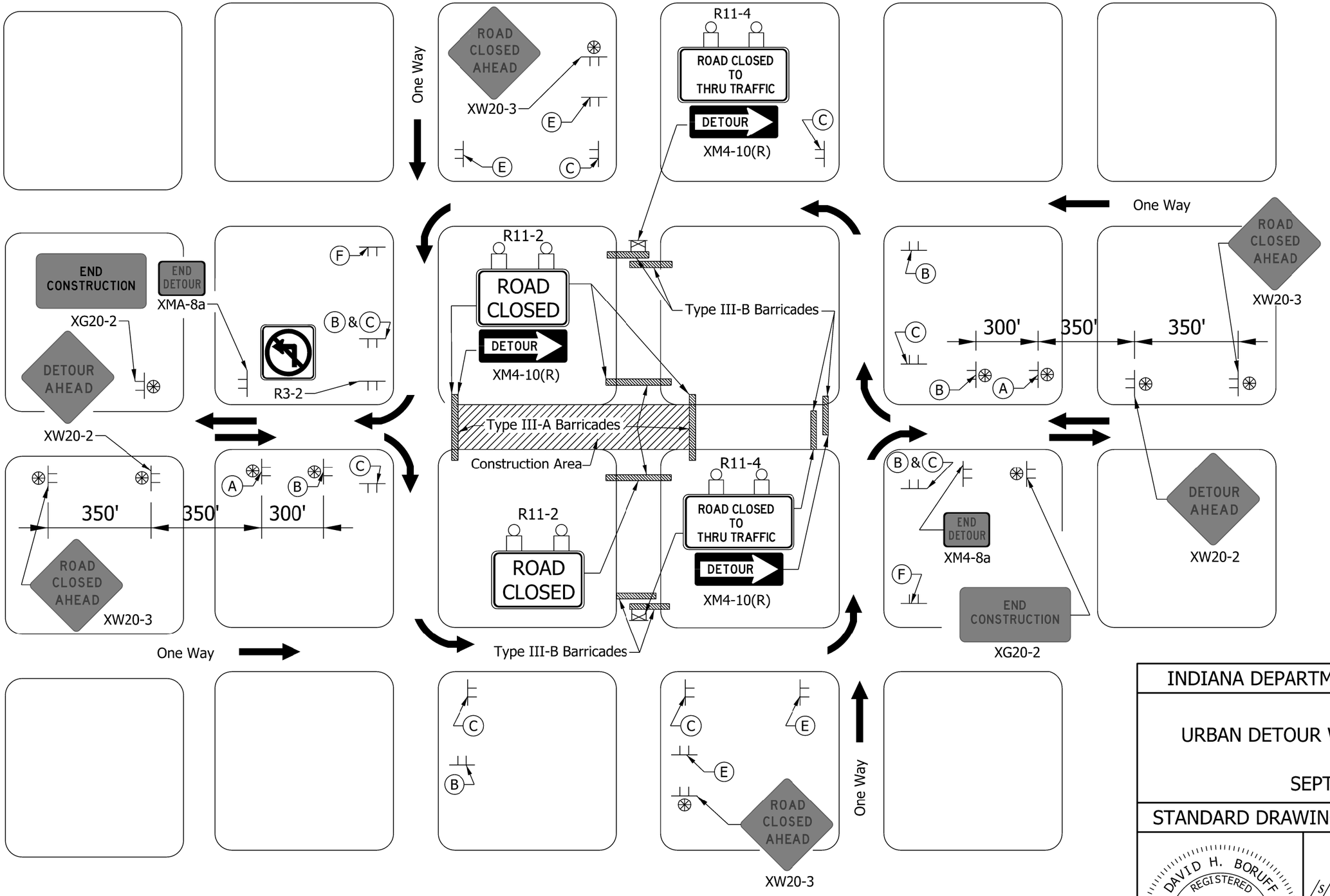

NOTES:

1. For detour marker assemblies (A), (B), (C), (E) and (F) see Standard Drawing E 801-TCDT-04.
2. See Standard Drawing E 801-TCLG-01 for standard notes and legend.

TYPICAL APPLICATIONS OF TRAFFIC CONTROL DEVICES FOR AN URBAN DETOUR

INDIANA DEPARTMENT OF TRANSPORTATION

URBAN DETOUR WITH ONE-WAY STREETS

SEPTEMBER 2017

STANDARD DRAWING NO. E 801-TCDT-03

DAVID H. BORUFF REGISTERED No. 60900348 STATE OF INDIANA PROFESSIONAL ENGINEER

/s/ David H. Boruff 04/24/17
DESIGN STANDARDS ENGINEER DATE

/s/ John Leckie 04/25/17
CHIEF ENGINEER DATE

XM 4-8

M3-1 to M3-4

M1-4 or M1-6

M5-1 (L or R)

Ⓐ ADVANCE TURN DETOUR ROUTE MARKER ASSEMBLY (1)

XM 4-8

M3-1 to M3-4

M1-4 or M1-6

M6-1

Ⓑ DIRECTIONAL DETOUR ROUTE MARKER ASSEMBLY (2)

XM 4-8

M3-1 to M3-4

M1-4 or M1-6

M6-3

Ⓒ CONFIRMING DETOUR ROUTE MARKER ASSEMBLY (3)

XM 4-8a

M3-1 to M3-4

M1-4 or M1-6

M6-1

Ⓓ END DETOUR ROUTE MARKER ASSEMBLY (4)

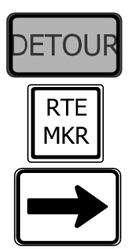

XM 4-8

M1-4 or M1-6

M6-1

Ⓔ BI-DIRECTIONAL DETOUR ROUTE MARKER ASSEMBLY

XM 4-8

M1-4 or M1-6

Ⓕ BI-DIRECTIONAL CONFIRMING DETOUR ROUTE MARKER ASSEMBLY

STATE HIGHWAY / NUMBERED LOCAL HIGHWAY

NOTES:

1. Advance turn detour route marker assemblies shall be located as shown, or after the last cross street prior to the beginning of the detour, as directed.
2. Directional detour route marker assemblies shall be located 100 ft. to 200 ft. in advance of all required turns within the detour limits.
3. Confirming detour route marker assemblies shall be located 200 ft. past all major intersections, as required, and shall be spaced a maximum of 3 mi. on a rural detour or 0.5 mi. on an urban detour on each leg of such detours. Confirming detour route marker assemblies shall be placed after a required turn when directed.
4. End detour route marker assemblies shall be located 100 ft. to 200 ft. in advance of the final turn of the detour.

INDIANA DEPARTMENT OF TRANSPORTATION

DETOUR ROUTE MARKER ASSEMBLIES

SEPTEMBER 2017

STANDARD DRAWING NO. E 801-TCDT-04

DAVID H. BORUFF REGISTERED No. 60900348 STATE OF INDIANA PROFESSIONAL ENGINEER

/s/ David H. Boruff 04/24/17
DESIGN STANDARDS ENGINEER DATE

/s/ John Leckie 04/25/17
CHIEF ENGINEER DATE

INDEX	
SHEET NO.	SUBJECT
1	Traffic Control Devices Index and General Notes
2	Channelizing Devices
3	Merge or Shift Taper
4	Channelizing Devices Usage
5	Type III Barricade
6	Typical Construction Sign Mounting
7	Type III Barricade Application for Road Closure for Thru Traffic
8	Type III Barricade Application for Road Closure to All Traffic
9	U Channel Steel Post Splice Detail
10	Temporary Transverse Rumble Strips
11	Worksite Speed Limit Sign Assembly
12	Worksite Speed Limit Sign Assembly Longitudinal Placement

GENERAL NOTES:

1. Unless otherwise noted, channelizing devices in tangent sections shall be 100 ft where the permanent posted speed limit is 50 m.p.h. or greater, and the spacing shall be 50 ft where the permanent posted speed limit is less than or equal to 45 m.p.h.

2. Unless otherwise noted, the spacing of channelizing devices in tapers shall be equal in feet to the permanent posted speed limit in m.p.h.

3. All channelizing devices shall satisfy NCHRP 350 or MASH crash evaluation criteria.

4. It is not necessary to delineate a drop-off of 3 in. or less adjacent to active travel lanes. Where channelizing devices are used to delineate drop-offs of 3 in. or less adjacent to active travel lanes, at least 33 in. of the device shall be above the adjoining pavement surface. Where channelizing devices are used to delineate a drop-off greater than 3 in. adjacent to active travel lanes, at least 27 in. of the device shall be above the adjoining pavement surface and a Type C warning light shall be attached to the top of the device (on the pavement side). In no case shall more than 9 in. of the device be below the adjoining pavement surface.

5. The proper orientation in respect to approaching vehicular traffic shall be maintained on channelizing devices. Drums are the preferred channelizing device in a tight radius curve and at intersections.

6. **Short-term stationary**,work that occupies a location for more than one hour within a single daylight period.
Intermediate-term stationary, work that occupies a location for more than one daylight period up to three days, or nighttime work lasting more than one hour.
Long-term stationary, work that occupies a location for more than three days.

INDIANA DEPARTMENT OF TRANSPORTATION

TRAFFIC CONTROL DEVICES
INDEX AND GENERAL NOTES

SEPTEMBER 2022

STANDARD DRAWING NO. E 801-TCDV-01

DAVID H. BORUFF
REGISTERED
No.
60900348
STATE OF
INDIANA
PROFESSIONAL ENGINEER

06/08/22
DESIGN STANDARDS ENGINEER DATE

06/27/2022
CHIEF ENGINEER DATE

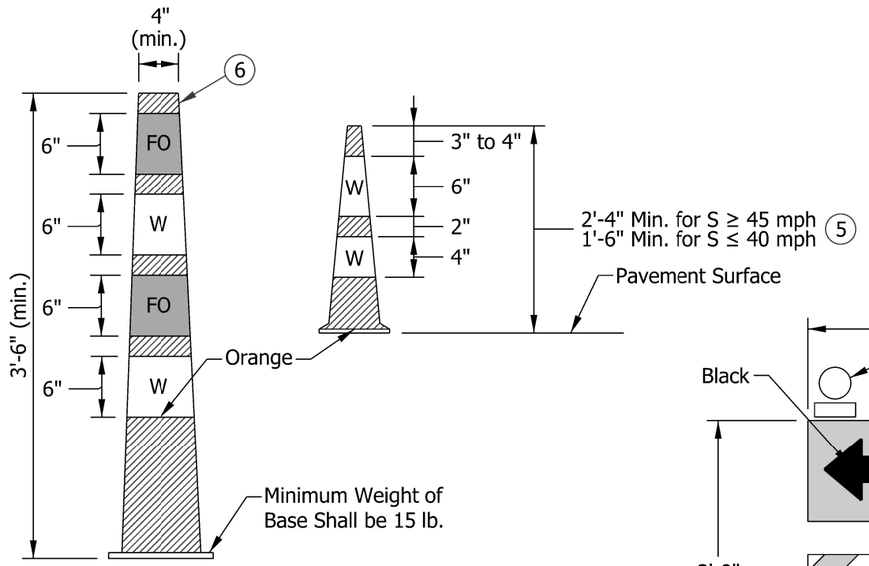

CONE

3

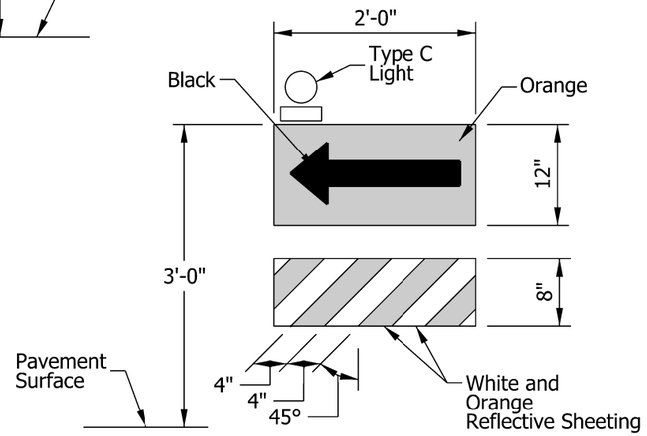

DIRECTION INDICATOR BARRICADE

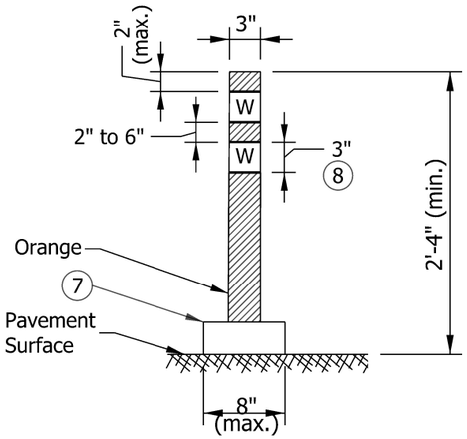

FLEXIBLE TUBULAR MARKER

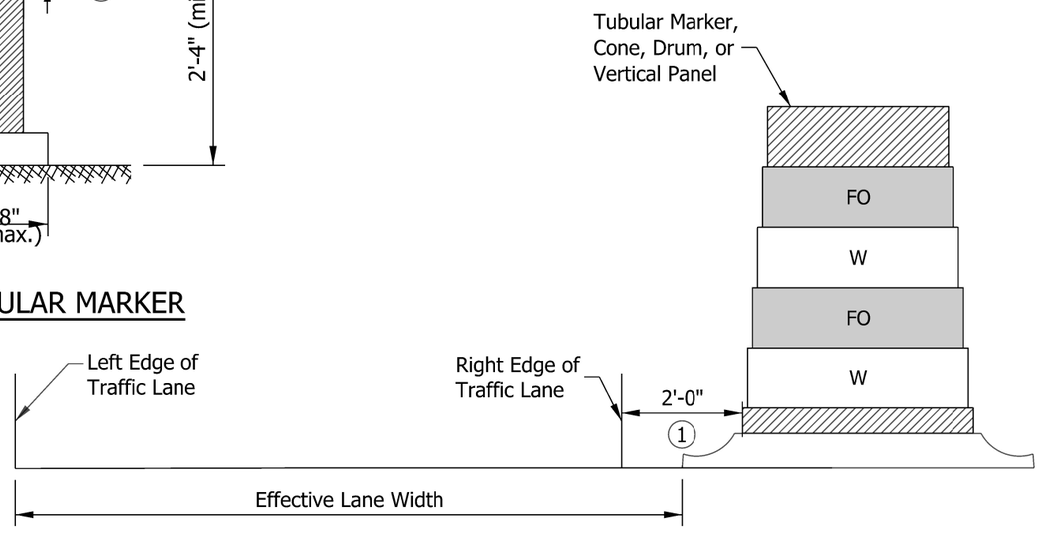

PLACEMENT OF CHANNELIZING DEVICES

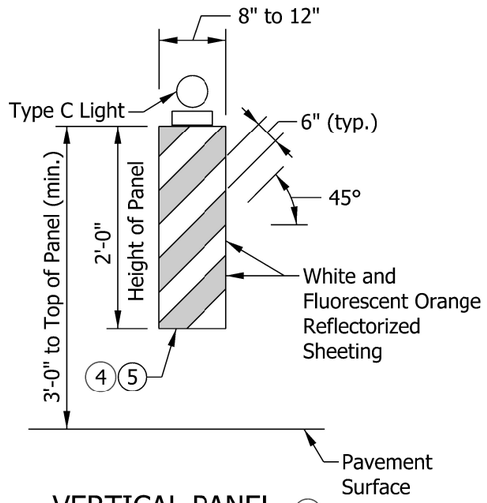

VERTICAL PANEL

1

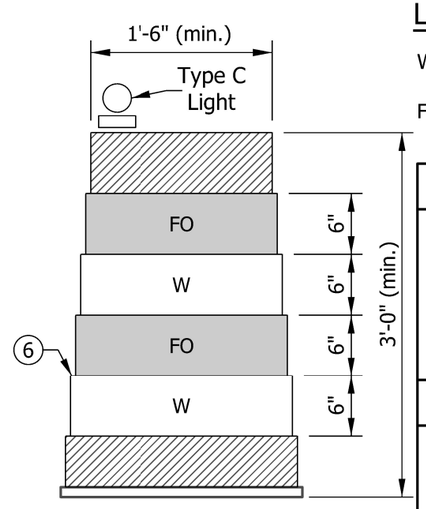

DRUM

NOTES:

1. Shy distance for tubular markers and cones may be reduced to 1 ft.
2. A Type C warning light will be required on tapers where there is a reduction in the number of lanes and a flashing arrow sign is used.
3. Reflective sheeting may be omitted from cones for lane closures during daylight hours.
4. For vertical panels equal to or greater than 3 ft in height, the width of the stripes shall be 6 in.
5. Vertical panels used on roadways with a permanent posted speed limit of 50 mph or greater shall have a minimum reflective panel area of 270 sq. in.
6. The maximum distance between the edges of adjacent reflective sheeting strips shall be 2 in.
7. Minimum flexible tubular marker base area shall be 0.3 sq ft.
8. For nighttime work, tubular markers with a height of less than 3.5 ft shall have two 3 in. white bands of reflective sheeting placed a maximum of 2 in. from the top with a maximum of 6 in. between the bands.
9. See Standard Drawing E 801-TCDV-04 for channelizing device usage and application.

LEGEND

W = White Reflective Sheeting

FO = Fluorescent Orange Reflective Sheeting

INDIANA DEPARTMENT OF TRANSPORTATION

CHANNELIZING DEVICES

SEPTEMBER 2022

STANDARD DRAWING NO. E 801-TCDV-02

DAVID H. BORUFF REGISTERED No. 60900348 STATE OF INDIANA PROFESSIONAL ENGINEER

David H Boruff 06/08/22

DESIGN STANDARDS ENGINEER DATE

06/27/2022

CHIEF ENGINEER DATE

NOTES:

1. For freeways, a taper length of 840 ft shall be used for the first merge taper. For subsequent merges, a length of 840 ft shall be used unless otherwise shown on the plans.
2. A shift taper preceded by a merge taper shall be separated by a tangent section equal to or greater than the length of the shift taper.

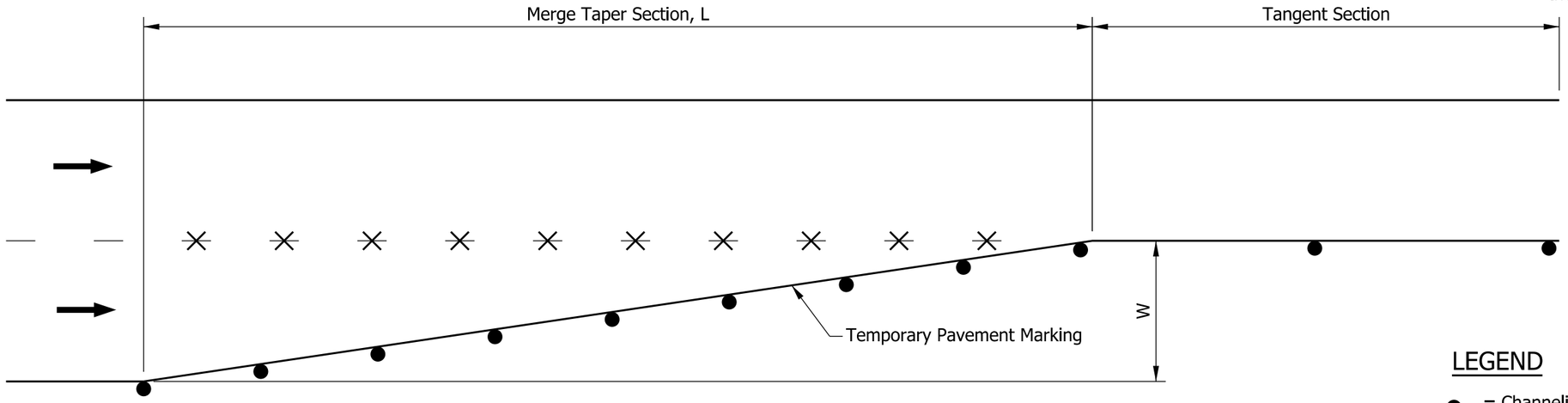

LEGEND

- ● = Channelizing Device
- ✳ = Removal of pavement markings and prismatic reflectors
- → = Direction of Traffic
- L = Minimum length of taper in ft
- S = Posted speed limit prior to the construction zone in mph
- W = Width of lane or shift in ft

MERGE TAPER				
S	Min. Taper Length L			
MPH	W = 9	W = 10	W = 11	W = 12
25	95	105	115	125
30	135	150	165	180
35	185	205	225	245
40	240	270	295	320
45	405	450	500	540
50	450	500	550	600
55	495	550	605	660
60	540	600	660	720
65	585	650	715	780
70	630	700	770	840
75	675	750	825	900

For W not shown in the table, L = W x S for a speed of 45 mph or greater.
L = W x $S^2/60$ for a speed of 40 mph or lower.

SHIFT TAPER				
S	Min. Taper Length L/2			
MPH	W = 9	W = 10	W = 11	W = 12
25	50	55	60	65
30	70	75	85	90
35	95	105	115	125
40	120	135	150	160
45	205	225	250	270
50	225	250	275	300
55	250	275	305	330
60	270	300	330	360
65	295	325	360	390
70	315	350	385	420
75	340	375	415	450

For W not shown in the table, L is one half that required for a merge taper.

INDIANA DEPARTMENT OF TRANSPORTATION

MERGE OR SHIFT TAPER

SEPTEMBER 2022

STANDARD DRAWING NO. E 801-TCDV-03

DAVID H. BORUFF REGISTERED No. 60900348 STATE OF INDIANA PROFESSIONAL ENGINEER

06/08/22
DESIGN STANDARDS ENGINEER DATE

06/27/2022
CHIEF ENGINEER DATE

Channelizing Device Type	Usage Application									
	To delineate merge tapers on		To delineate tangents where adequate space exists and also lane shift tapers on		Where the effective lane width is less than 10 ft to delineate tangents in lieu of drums on		Where the effective lane width is less than 10 ft to delineate edge of pavement drop-off in lieu of drums on		To divide opposing lanes of traffic on	To divide two or more lanes of same direction traffic on
	Freeways	Non-Freeways	Freeways	Non-Freeways	Freeways	Non-Freeways	Freeways	Non-Freeways	Non-Freeways	Non-Freeways
18 in. Cone (1) ≤ 40 mph Posted Speed Limit	No	Yes (4)	No	Yes (4)	No	No	No	No	Yes (4)	Yes (4)
18 in. Cone ≥ 45 mph Posted Speed Limit	No	No	No	No	No	No	No	No	No	No
28 in. Cone (1) ≤ 40 mph Posted Speed Limit	No	Yes (5)	No	Yes (5)	No	No	No	No	Yes (5)	Yes (5)
28 in. Cone (2) 45 mph Posted Speed Limit	No	Yes (4)	No	Yes (4)	No	No	No	No	Yes (5)	Yes (5)
28 in. Cone ≥ 50 mph Posted Speed Limit	No	Yes (4)	No	Yes (4)	No	No	No	No	Yes (5)	Yes (5)
42 in. Channelizer (Cone) (1) (6) ≤ 45 mph Posted Speed Limit	No	Yes (5)	No	Yes (5)	Yes	Yes	Yes	Yes	Yes (5)	Yes (5)
42 in. Channelizer (Cone) (2) (6) ≥ 50 mph Posted Speed Limit	No	Yes (5)	No	Yes (5)	Yes	Yes	Yes	Yes	Yes (5)	Yes (5)
Direction Indicator Barricade (3)	Yes	Yes	No	No	No	No	No	No	No	No
Flexible Tubular Marker (3)	No	No	No	No	No	No	No	Yes	Yes	Yes
Vertical Panel (3)	No	Yes	No	Yes	No	Yes	No	Yes	No	No
Construction Drum (3)	Yes	Yes	Yes	Yes	No	No	No	No	No	No

CHANNELIZING DEVICE USAGE TABLE

NOTES:

(1) Spacing in tangent shall be 40 ft maximum; spacing between devices in taper shall be numerically equal in feet, maximum, to the posted speed limit in m.p.h.

(2) Spacing in tangent shall be 80 ft maximum; spacing between devices in taper shall be numerically equal in feet, maximum, to the posted speed limit in m.p.h.

(3) Spacing in tangents shall be 50 ft maximum when the speed limit is 45 m.p.h. or below; spacing in tangents shall be 100 ft maximum when the posted speed limit is 50 mph or above; in cases where the posted speed limit is intermittently set to 45 m.p.h. the channelizing devices shall be maintained at 90 ft maximum spacing; spacing of channelizing devices on tapers shall be numerically equal in feet, maximum, to the posted speed limit in m.p.h.

(4) May only be used for daylight restrictions.

(5) May not be used for long-term, stationary work (more than 3 days).

(6) 30 lb ballast configuration required.

7. For the purpose of channelizing device usage and spacing, the posted speed limit is the permanent posted speed limit, temporary speed limit, or worksite speed limit, whichever is lower.

INDIANA DEPARTMENT OF TRANSPORTATION

CHANNELIZING DEVICE USAGE

SEPTEMBER 2022

STANDARD DRAWING NO. E 801-TCDV-04

DAVID H. BORUFF REGISTERED No. 60900348 STATE OF INDIANA PROFESSIONAL ENGINEER

DESIGN STANDARDS ENGINEER — DATE 06/08/22

CHIEF ENGINEER — DATE 06/27/2022

NOTES:

1. Barricade lights, signs, and supports shall satisfy NCHRP 350 or MASH crash evaluation criteria.
2. The detour arrow sign shall be used only when a detour route has been signed.
3. The sign assembly shall be above the Type III barricade.

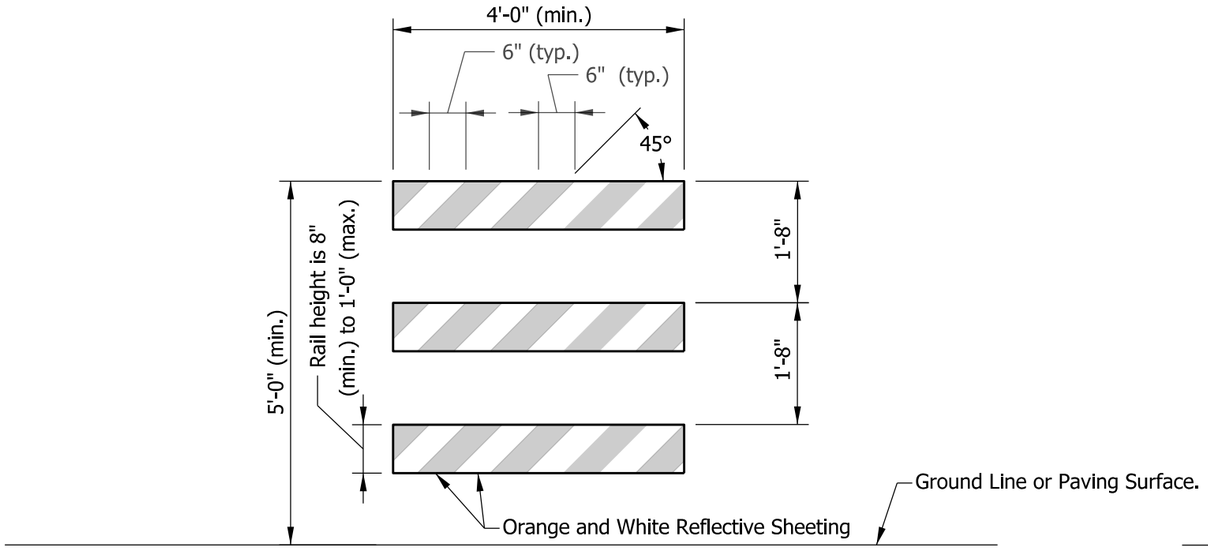

TYPE III BARRICADE

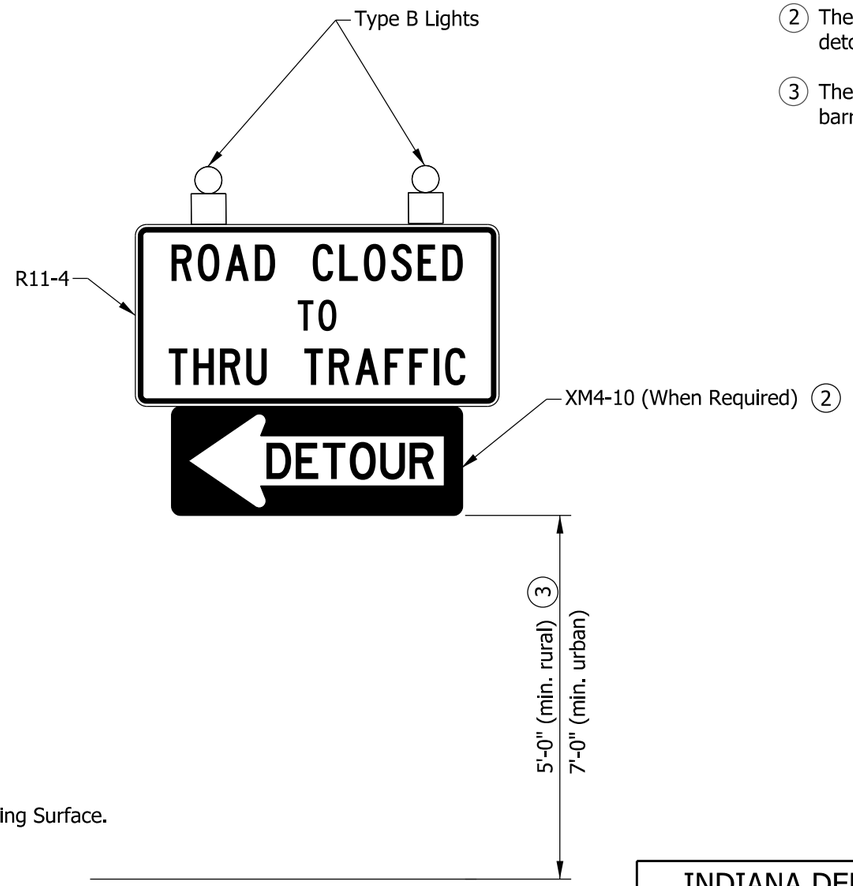

ROAD CLOSURE SIGN ASSEMBLY

INDIANA DEPARTMENT OF TRANSPORTATION

TYPE III BARRICADE

SEPTEMBER 2022

STANDARD DRAWING NO. E 801-TCDV-05

DAVID H. BORUFF REGISTERED No. 60900348 STATE OF INDIANA PROFESSIONAL ENGINEER

David H Boruff 06/08/22
DESIGN STANDARDS ENGINEER DATE

06/27/2022
CHIEF ENGINEER DATE

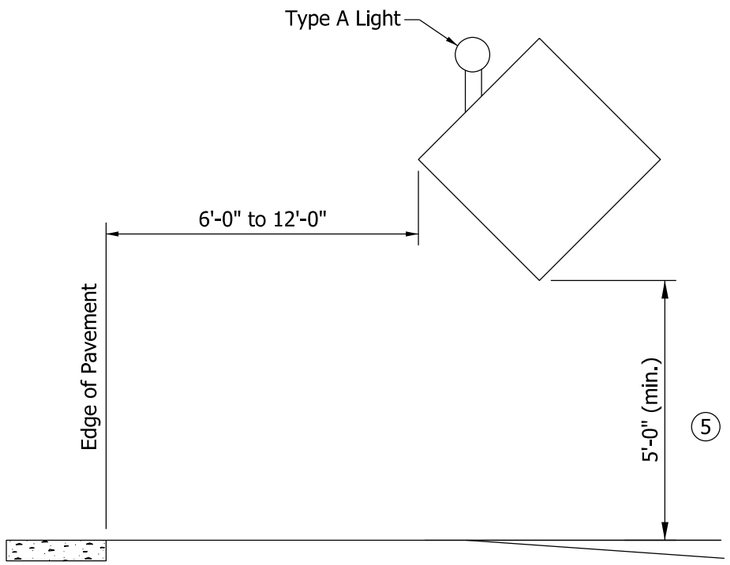

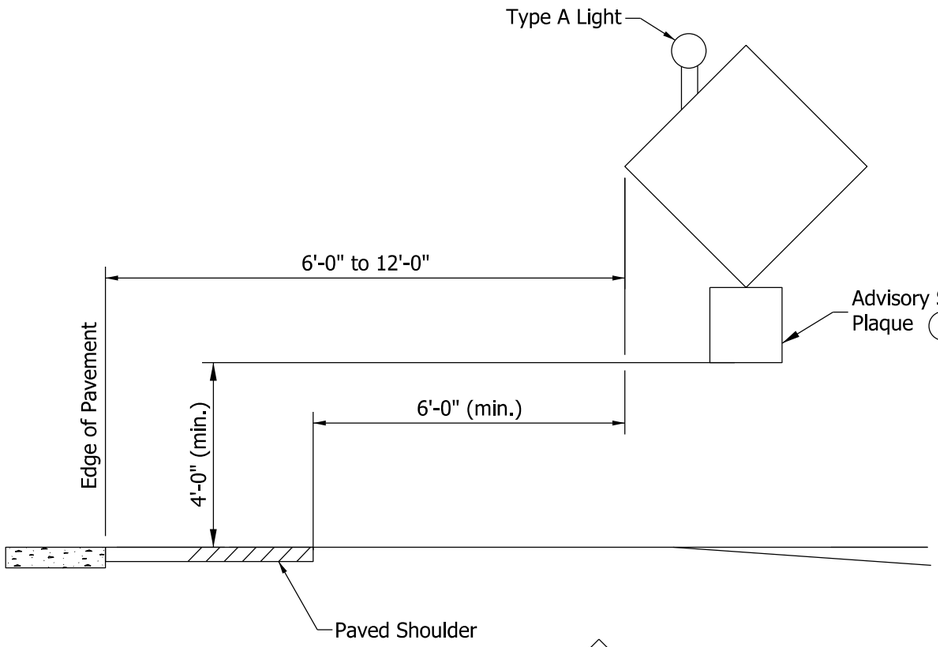

ROADWAY WITHOUT CURB

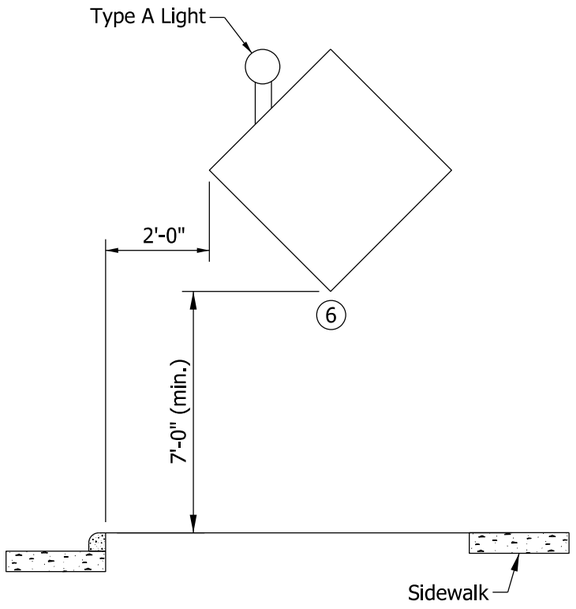

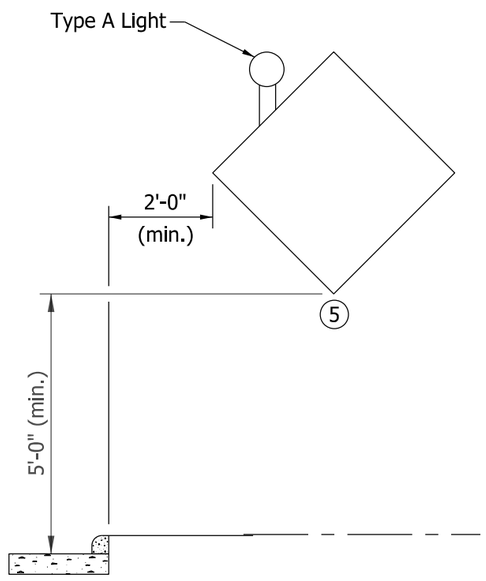

CURBED ROADWAY

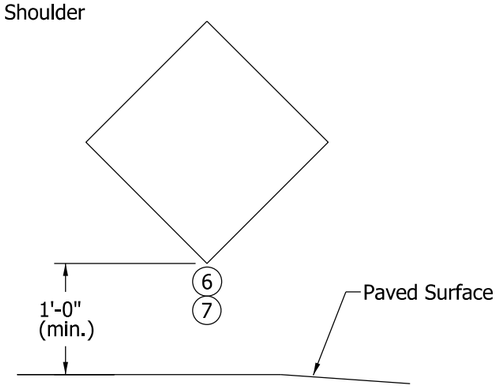

TEMPORARY MOUNTED CONSTRUCTION SIGN

NOTES:

1. See Standard Drawing E 801-TCSN-07 for additional notes.
2. Signs, lights, and supports shall satisfy NCHRP 350 or MASH crash evaluation criteria.
3. An advisory speed plaque, required to be placed with another construction sign, may be mounted on the post closest to the roadway at a height not less than 4 ft above the edge of pavement adjacent to the sign. The bottom of the construction warning sign shall not be lower than the top of the advisory speed plaque.
4. Type A warning light required on all construction signs.
5. In urban area or on Interstate route, mounting height shall not be less than 7 ft.
6. When signs are placed on sidewalk, a 4 ft useable width shall be maintained. No part of the sign or support that is less than 7 ft in height may protrude more than 4 in. into the 4 ft useable sidewalk width.
7. Temporary mounted construction sign for nighttime work or for operations which affect traffic lanes shall have a mounting height of 5 ft above the traveled way. On roadways where on-street parking is allowed, temporary mounted construction signs shall have a minimum sign mounting height of 7 ft above the traveled way.

INDIANA DEPARTMENT OF TRANSPORTATION

TYPICAL CONSTRUCTION SIGN MOUNTING

SEPTEMBER 2022

STANDARD DRAWING NO. E 801-TCDV-06

DAVID H. BORUFF REGISTERED No. 60900348 STATE OF INDIANA PROFESSIONAL ENGINEER

David H Boruff 06/08/22
DESIGN STANDARDS ENGINEER DATE

06/27/2022
CHIEF ENGINEER DATE

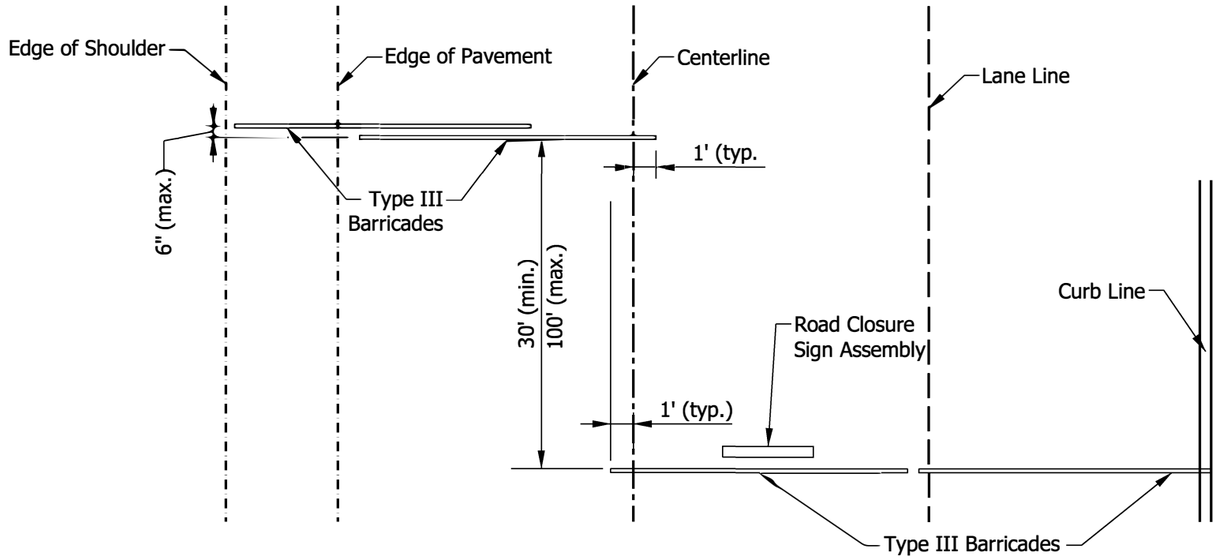

PLAN VIEW

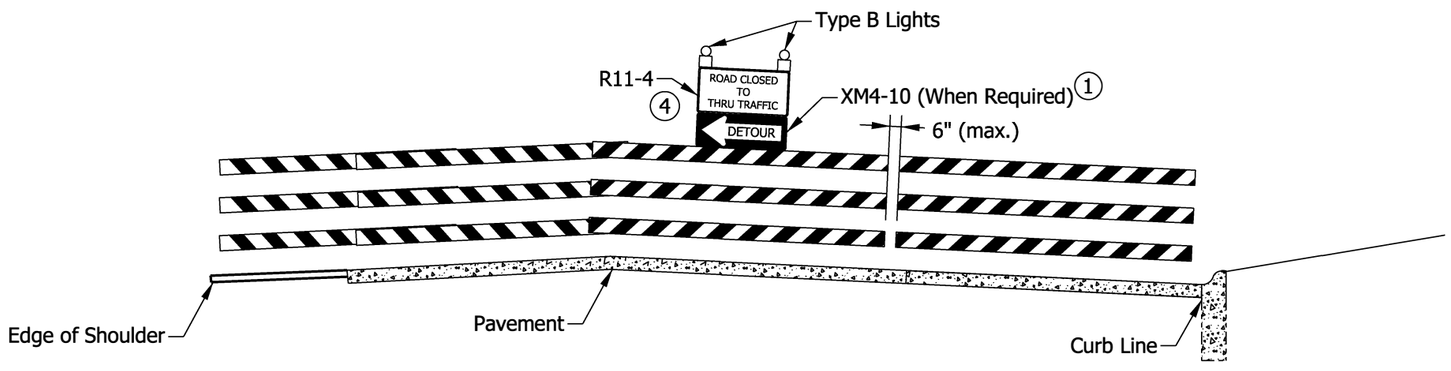

ELEVATION

NOTES:

1. The detour arrow (XM4-10) sign shall be used only when a detour route has been signed.
2. See Standard Drawing E 801-TCDV-06 for sign mounting information.
3. Barricades and supports shall satisfy NCHRP 350 or MASH crash evaluation criteria.
4. The R11-3a ("ROAD CLOSED/LOCAL TRAFFIC ONLY") sign may be substituted for the R11-4 sign as shown on the plans or as directed by the engineer.

INDIANA DEPARTMENT OF TRANSPORTATION

TYPE III BARRICADE APPLICATION FOR ROAD CLOSURE FOR THRU TRAFFIC

SEPTEMBER 2022

STANDARD DRAWING NO. E 801-TCDV-07

DAVID H. BORUFF
REGISTERED
No. 60900348
STATE OF INDIANA
PROFESSIONAL ENGINEER

David H Boruff 06/08/22
DESIGN STANDARDS ENGINEER DATE

06/27/2022
CHIEF ENGINEER DATE

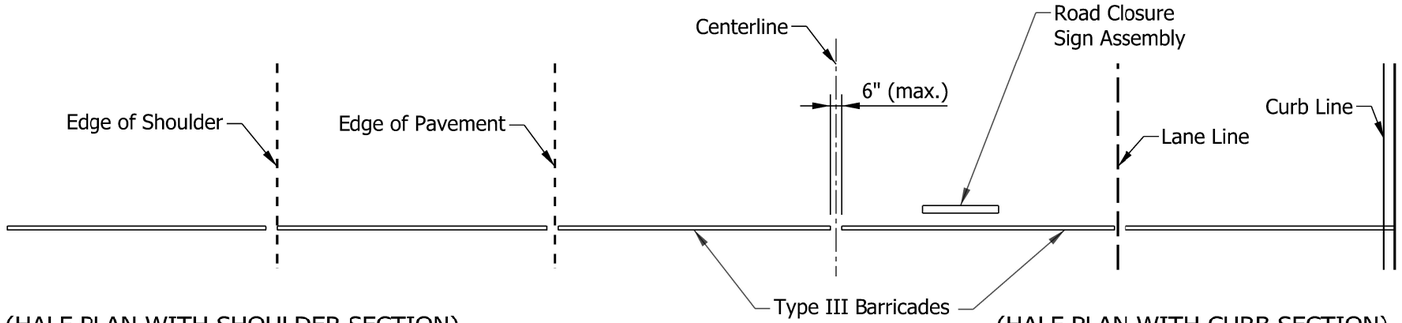

(HALF PLAN WITH SHOULDER SECTION)

(HALF PLAN WITH CURB SECTION)

PLAN VIEW

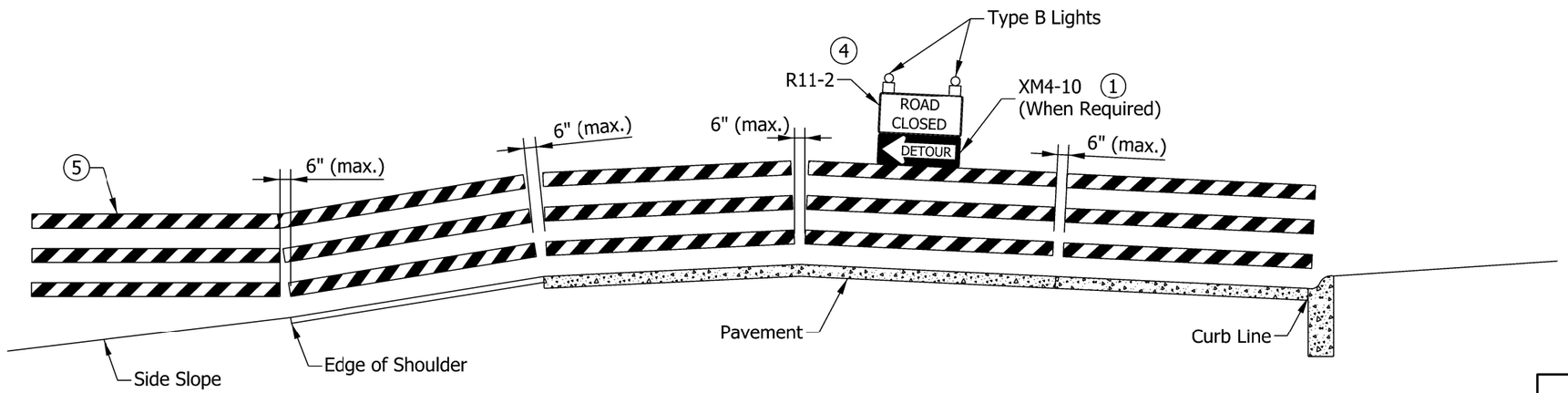

(HALF ELEVATION WITH SHOULDER SECTION)

(HALF ELEVATION WITH CURB SECTION)

ELEVATION

NOTES:

1. The detour arrow (XM 4-10) sign shall be used only when a detour route has been signed.
2. See Standard Drawing E 801-TCDV-06 for sign mounting information.
3. Barricades and supports shall satisfy NCHRP 350 or MASH crash evaluation criteria.
4. The sign legend of the R11-2 sign may be modified to "BRIDGE CLOSED" as shown on the plans or as directed by the engineer.
5. Barricades shall be supported on driven posts in areas outside of the pavement or sidewalk, where side slopes are 3 to 1 or flatter.

INDIANA DEPARTMENT OF TRANSPORTATION

TYPE III BARRICADE APPLICATION FOR ROAD CLOSURE TO ALL TRAFFIC

SEPTEMBER 2022

STANDARD DRAWING NO. E 801-TCDV-08

DAVID H. BORUFF REGISTERED No. 60900348 STATE OF INDIANA PROFESSIONAL ENGINEER

DESIGN STANDARDS ENGINEER — DATE 06/08/22

CHIEF ENGINEER — DATE 06/27/2022

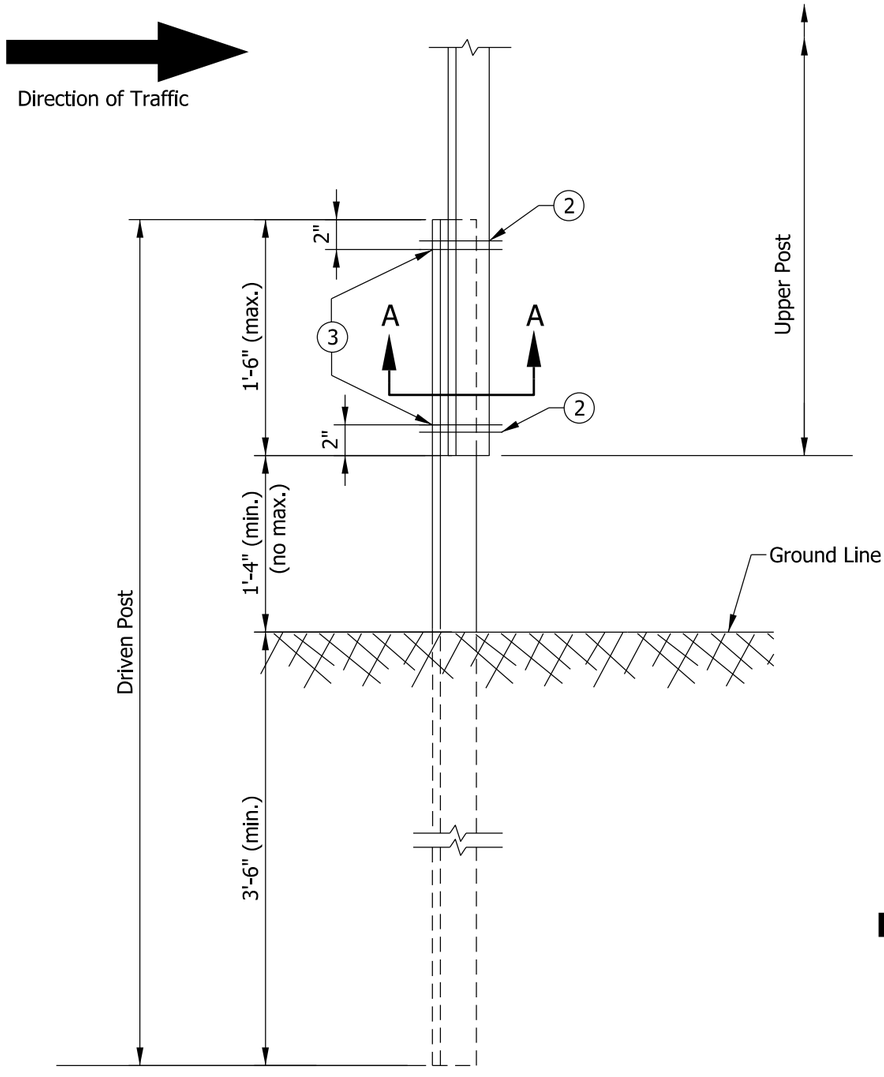

ELEVATION

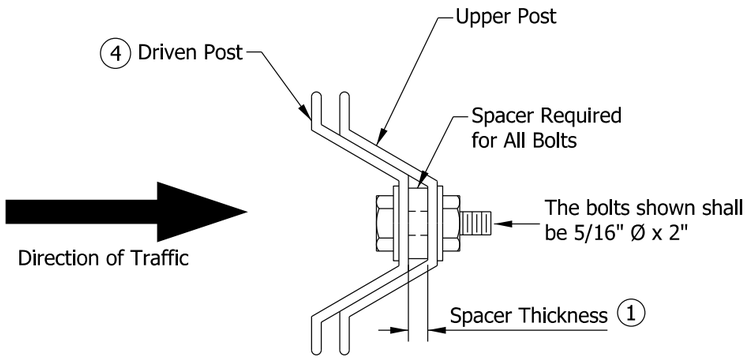

SECTION A-A

U CHANNEL STEEL POST SPLICE

NOTES:

1. The spacer thickness shall be 1/16 in. less than the gap between the posts when positioned in the unbolted configuration.
2. The lower bolt, spacer, washer, and nut shall be installed in a prepunched hole within the first 2 in. of the end of the lapped post section.
3. The upper bolt, spacer, washer, and nut shall be installed in a prepunched hole within the first 2 in. of the lower bolt. The maximum spacing between the bolts shall be 1.5 ft. If the length of the post lap is increased such that this 1.5 ft maximum is exceeded, then interior bolts shall be installed such that the maximum space between adjacent bolts does not exceed the 1.5 ft limit.
4. The driven post shall be mounted in front of the upper post with respect to adjacent oncoming traffic, regardless of the direction the sign is facing.

INDIANA DEPARTMENT OF TRANSPORTATION

U CHANNEL STEEL
POST SPLICE DETAIL

SEPTEMBER 2022

STANDARD DRAWING NO. E 801-TCDV-09

DAVID H. BORUFF
REGISTERED
No.
60900348
STATE OF
INDIANA
PROFESSIONAL ENGINEER

David H Boruff 06/08/22
DESIGN STANDARDS ENGINEER DATE

06/27/2022
CHIEF ENGINEER DATE

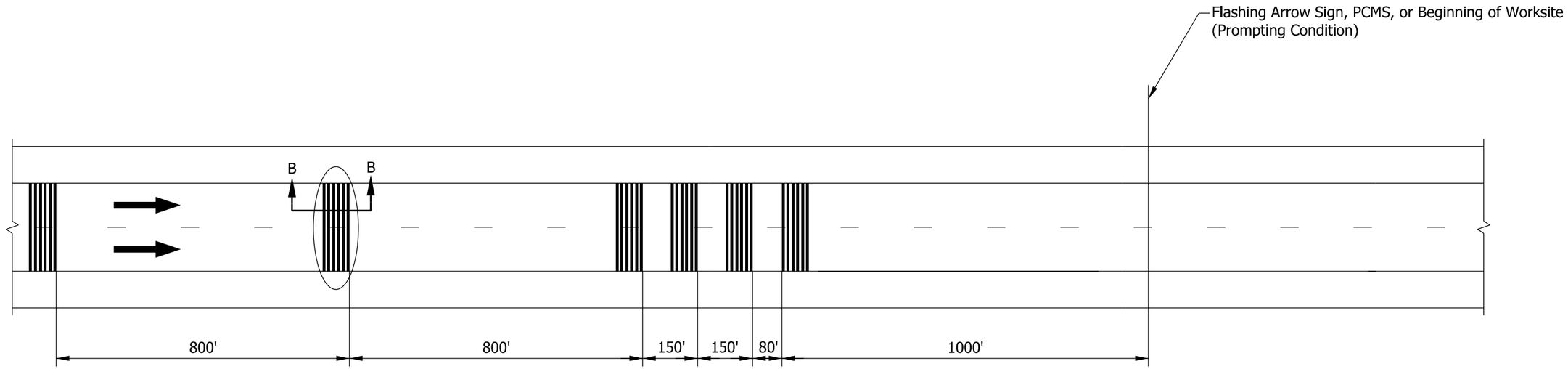

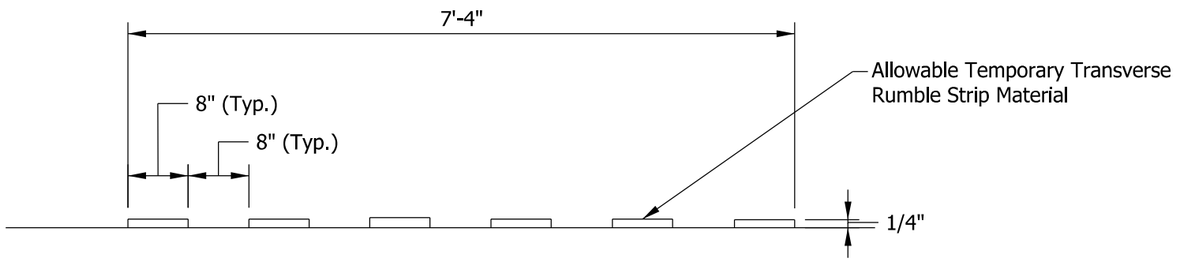

SECTION B-B

LEGEND

Direction of Traffic

INDIANA DEPARTMENT OF TRANSPORTATION

TEMPORARY TRANSVERSE RUMBLE STRIPS

SEPTEMBER 2022

STANDARD DRAWING NO. E 801-TCDV-10

DAVID H. BORUFF
REGISTERED
No. 60900348
STATE OF INDIANA
PROFESSIONAL ENGINEER

David H Boruff 06/08/22
DESIGN STANDARDS ENGINEER DATE

06/27/2022
CHIEF ENGINEER DATE

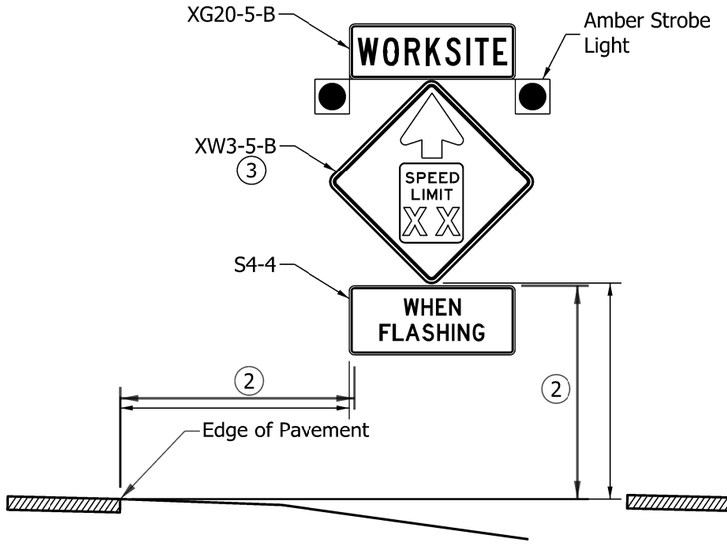

REDUCED SPEED ADVANCE WARNING SIGN ASSEMBLY

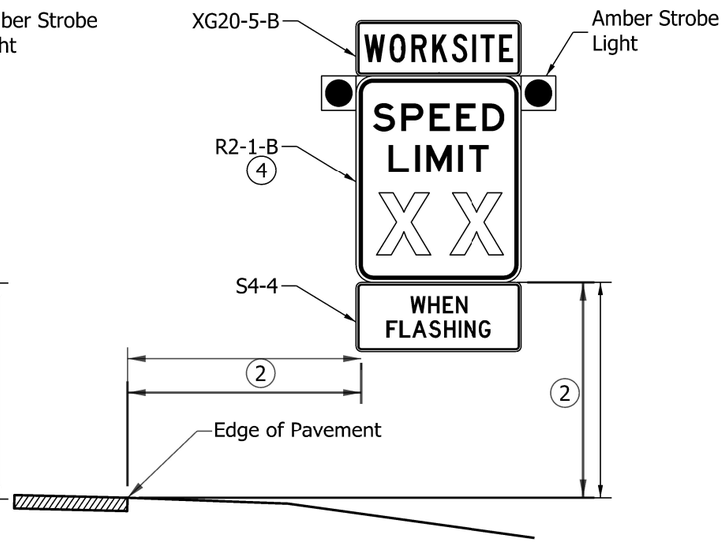

WORKSITE SPEED LIMIT SIGN ASSEMBLY

INTERMITTENT USE TYPE

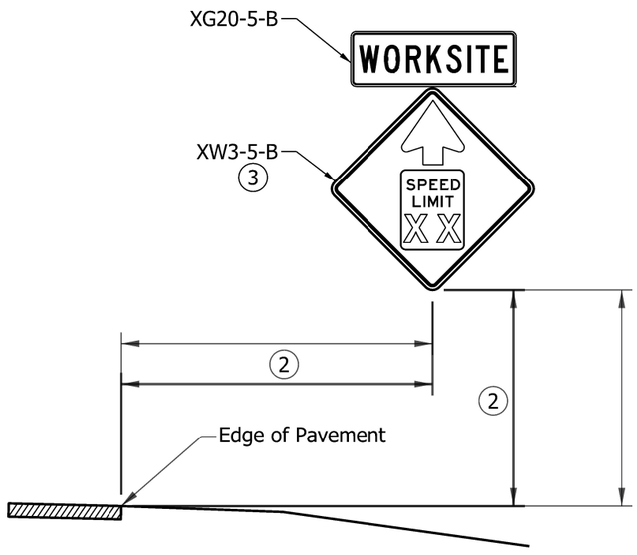

REDUCED SPEED ADVANCE WARNING SIGN ASSEMBLY

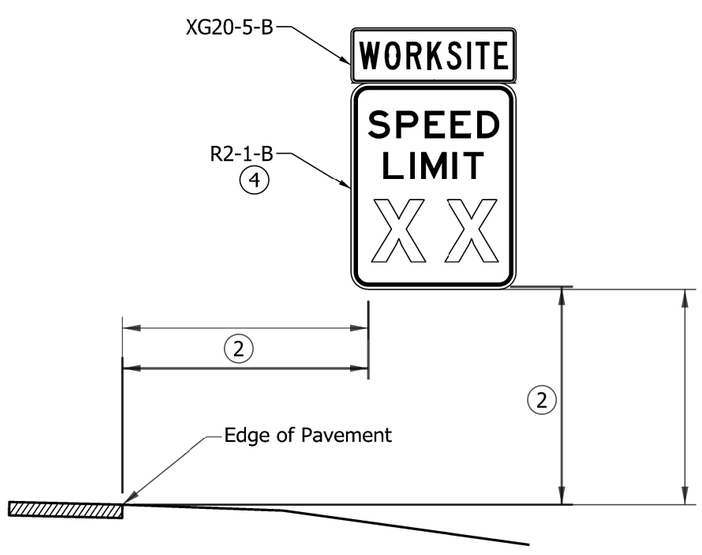

WORKSITE SPEED LIMIT SIGN ASSEMBLY

CONTINUOUS USE TYPE

NOTES:

1. If not trailer mounted, signs and supports shall satisfy NCHRP 350 or MASH crash evaluation criteria.
2. See Standard Drawing E 801-TCDV-06 for lateral and vertical placement.
3. The speed limit on advance warning signs shall match the worksite speed limit signs.
4. The worksite speed limit shall be at least 10 mph but no more than 15 mph below the permanent posted speed limit for the roadway under construction unless otherwise shown on the plans.
5. Sign series shown is for freeway or expressway application.

INDIANA DEPARTMENT OF TRANSPORTATION

WORKSITE SPEED LIMIT SIGN ASSEMBLY

SEPTEMBER 2022

STANDARD DRAWING NO. E 801-TCDV-11

DAVID H. BORUFF REGISTERED No. 60900348 STATE OF INDIANA PROFESSIONAL ENGINEER

David H Boruff 06/08/22

DESIGN STANDARDS ENGINEER DATE

06/27/2022

CHIEF ENGINEER DATE

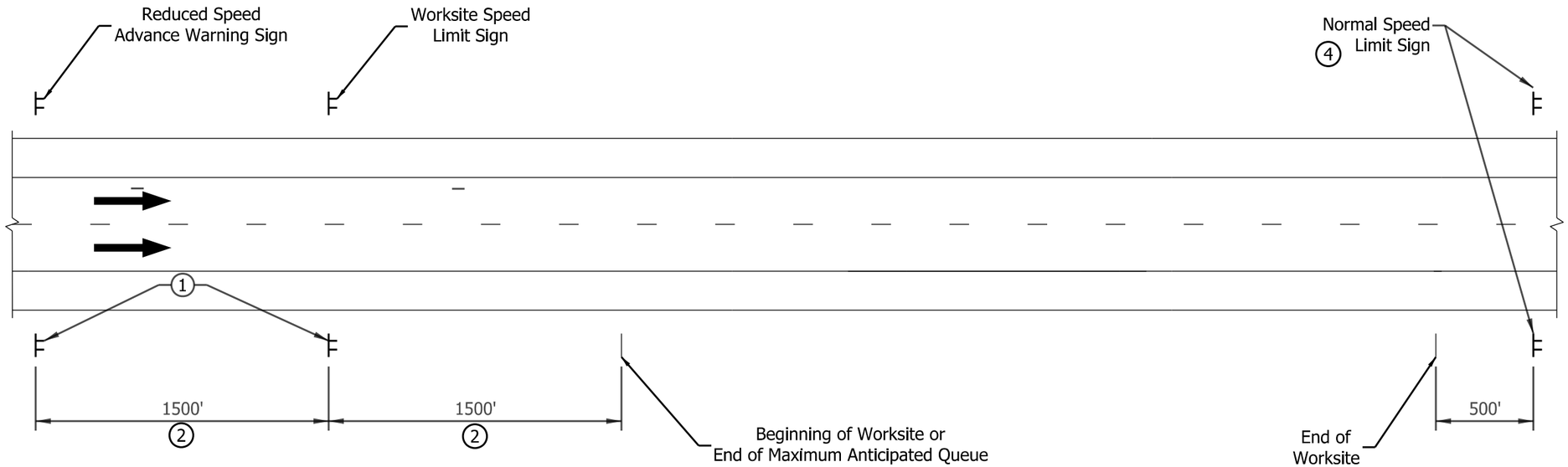

NOTES:

1. Worksite speed limit sign assemblies shall be placed on both sides of the directional lanes when multiple lanes traveling in the same direction are open to traffic. For undivided roadways, or on roadways where a single lane is open in one direction, assemblies are required on only one side of the roadway.

2. Assembly spacing may be reduced using Distance B from Table 6C-1 of the IMUTCD for Urban and Rural Roadways.

3. Worksite speed limit sign assemblies shall be placed 500 ft beyond each crossroad or the last entrance ramp for each interchange, at 1 mile intervals throughout the worksite, or adjacent to the existing normal speed limit signs.

4. For a rural Interstate route application, a truck speed limit sign shall be used and placed immediately to the right of the normal speed limit sign.

5. See Standard Drawing E 801-TCDV-11 for worksite speed limit sign assembly.

INDIANA DEPARTMENT OF TRANSPORTATION

WORKSITE SPEED LIMIT SIGN ASSEMBLY LONGITUDINAL PLACEMENT

SEPTEMBER 2022

STANDARD DRAWING NO. E 801-TCDV-12

DAVID H. BORUFF
REGISTERED
No.
60900348
STATE OF
INDIANA
PROFESSIONAL ENGINEER

06/08/22
DESIGN STANDARDS ENGINEER — DATE

06/27/2022
CHIEF ENGINEER — DATE

INDEX

SHEET NO.	SUBJECT
1	Flagger Operation for Two Lane Roads, Index and General Notes
2	Flagger Operation for Multiple Work Areas with Posted Speed ≥ 50 mph
3	Flagger Operation for Urban Two Lane Roads with Posted Speed < 50 mph (Single Work Area)
4	Flagger Operation on Horizontal Curves (Single Work Area)
5	Maintenance of Traffic for Mobile Operation with Flaggers for Two Lane Roads
6	Flagger Operation for Temporary Traffic Stoppage for Two Lane Roads

GENERAL NOTES:

1. Unless otherwise noted, the spacing of channelizing devices in tangent sections shall be 100 ft where the posted speed limit is 50 mph or greater, and the spacing shall be 50 ft where the posted speed limit is less than or equal to 45 mph.
2. For temporary lane closures during daylight hours, cones or tubular markers may be used in lieu of drums.
3. Temporary pavement markings shall not be required for temporary daylight lane closures
4. Channelizing devices as shown are schematic, the number of channelizing devices will vary based on field conditions.
5. The posted speed limit is the permanent posted speed limit prior to road construction.

INDIANA DEPARTMENT OF TRANSPORTATION

FLAGGER OPERATION FOR TWO LANE ROADS, INDEX AND GENERAL NOTES

SEPTEMBER 2022

STANDARD DRAWING NO. E 801-TCFO-01

DAVID H. BORUFF REGISTERED No. 60900348 STATE OF INDIANA PROFESSIONAL ENGINEER

05/17/22
DESIGN STANDARDS ENGINEER DATE

06/27/2022
CHIEF ENGINEER DATE

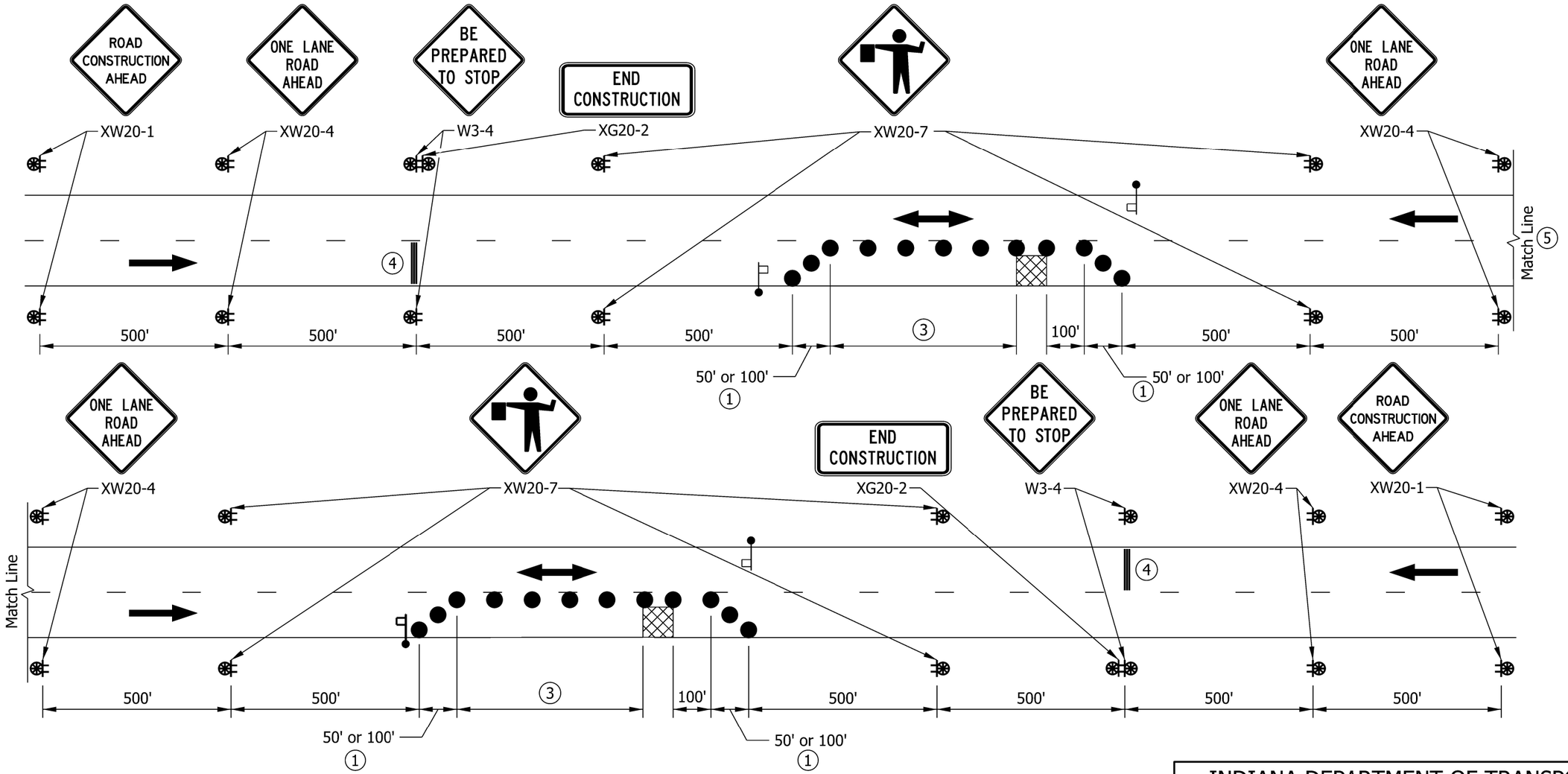

NOTES:

1. Spacing of channelizing devices at this location shall be 10 ft for a 50 ft taper or 20 ft for a 100 ft taper.
2. If Automated Flagger Assistance Devices are used, see Part 6 of the MUTCD for set-up requirements.
3. Longitudinal Buffer Length
4. Portable rumble strip installation, if required.
5. Work areas more than 1 mile apart shall include XW20-1 signs 500 ft in advance of XW20-4 signs, and W3-4 signs 500 ft after the XW20-4 signs.

LONGITUDINAL BUFFER LENGTH	
Posted Speed Limit (mph)	Length (ft)
50	425
55	495

LEGEND

- Flagger
- Work Area
- Channelizing Device
- Construction Sign and Supports
- Construction Warning Light, Type A
- Direction of Traffic

INDIANA DEPARTMENT OF TRANSPORTATION

FLAGGER OPERATION FOR MULTIPLE WORK AREAS WITH POSTED SPEED ≥ 50 MPH

SEPTEMBER 2022

STANDARD DRAWING NO. E 801-TCFO-02

DAVID H. BORUFF REGISTERED No. 60900348 STATE OF INDIANA PROFESSIONAL ENGINEER

David H Boruff 05/17/22
DESIGN STANDARDS ENGINEER DATE

06/27/2022
CHIEF ENGINEER DATE

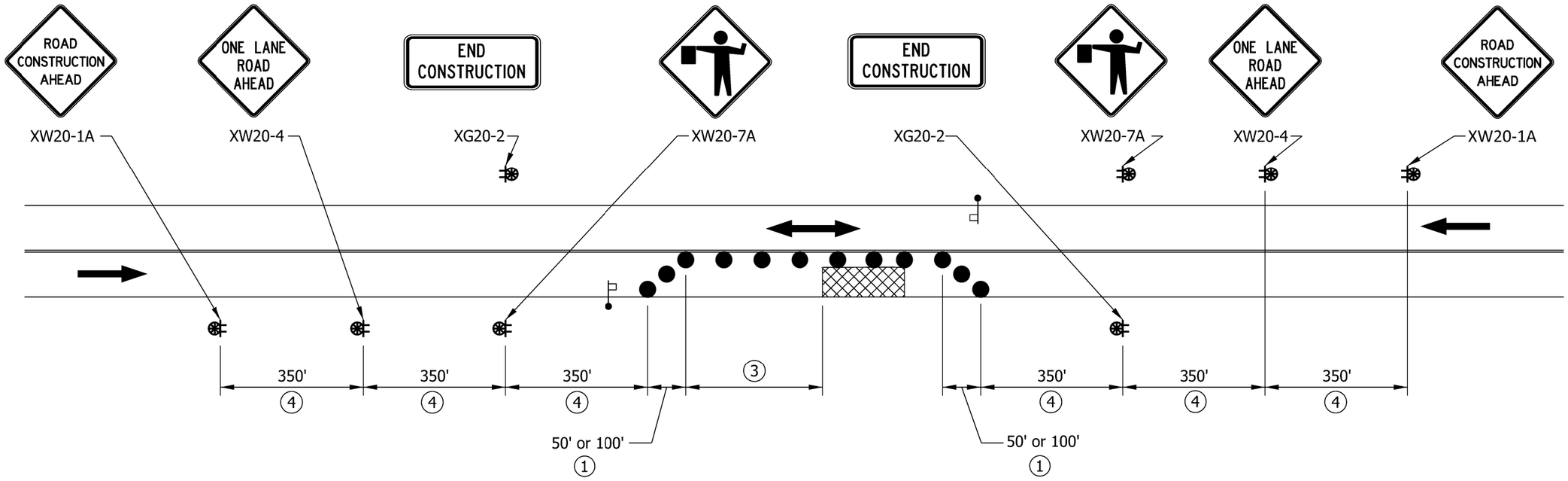

NOTES:

1. Spacing of channelizing devices at this location shall be 10 ft for a 50 ft taper or 20 ft for a 100 ft taper.
2. If Automated Flagger Assistance Devices are used, see Part 6 of the MUTCD for set-up requirements.
3. Longitudinal Buffer Length
4. Sign spacing may be 100 ft for posted speed limits ≤ 35 mph.

LONGITUDINAL BUFFER LENGTH	
Posted Speed Limit (mph)	Length (ft)
≤30	200
35	250
40	305
45	360

LEGEND

- Flagger
- Work Area
- Channelizing Device
- Construction Sign and Supports
- Construction Warning Light, Type A
- Direction of Traffic

INDIANA DEPARTMENT OF TRANSPORTATION

FLAGGER OPERATION FOR URBAN TWO LANE ROADS WITH POSTED SPEED < 50 MPH SINGLE WORK AREA

SEPTEMBER 2022

STANDARD DRAWING NO. E 801-TCFO-03

DAVID H. BORUFF REGISTERED No. 60900348 STATE OF INDIANA PROFESSIONAL ENGINEER

David H Boruff 05/17/22
DESIGN STANDARDS ENGINEER DATE

06/27/2022
CHIEF ENGINEER DATE

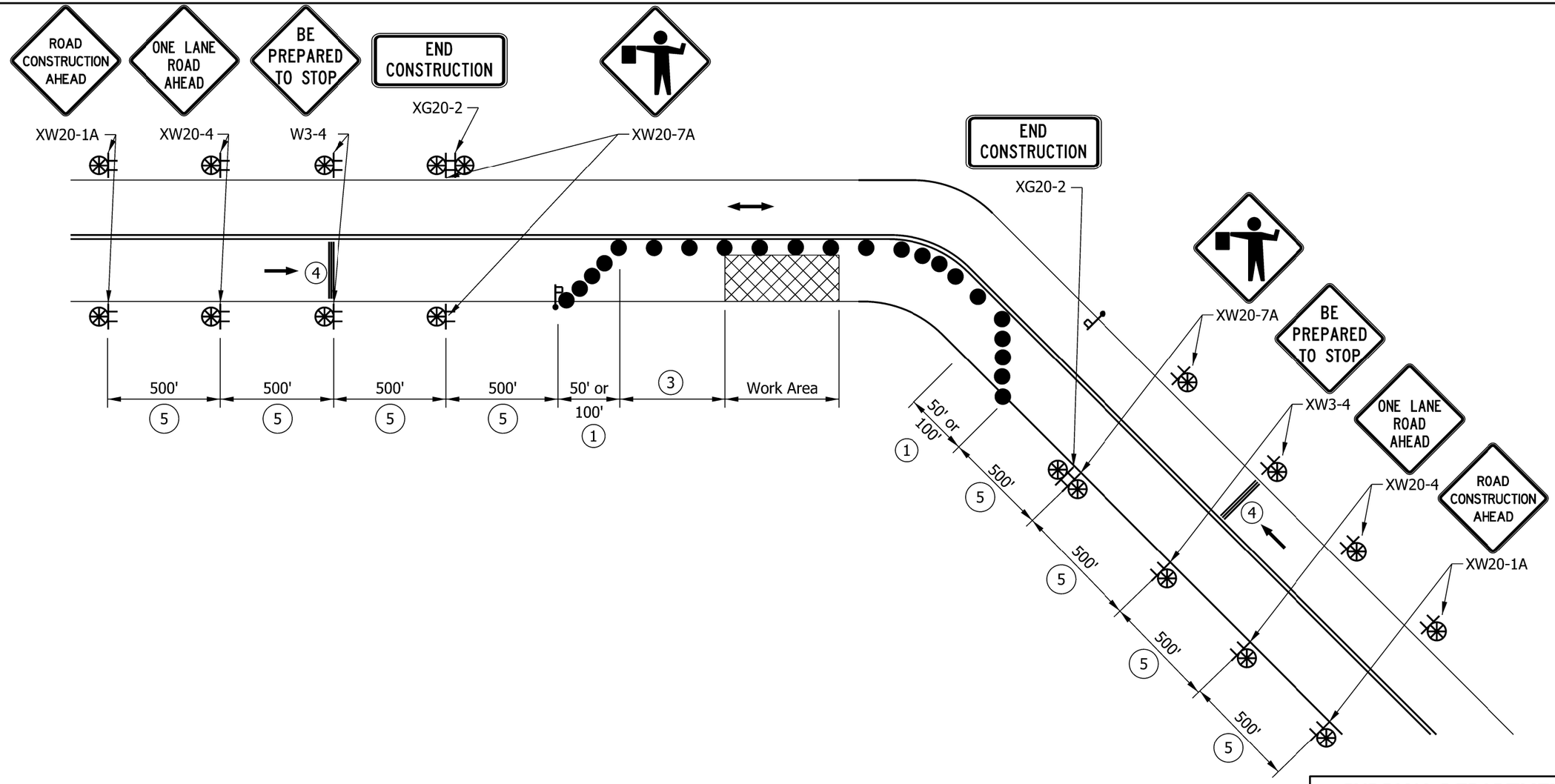

NOTES:

(1) Spacing of channelizing devices at this location shall be 10 ft for a 50 ft taper or 20 ft for a 100 ft taper.

2. If Automated Flagger Assistance Devices are used, see Part 6 of the MUTCD for set-up requirements.

(3) Longitudinal Buffer Length

(4) Portable rumble strip installation, if required.

(5) Sign spacing may be 350 ft for posted speed limits of 40 mph or 45 mph and 100 ft for posted speed limits ≤ 35 mph.

6. For posted speed limits < 50 mph, all construction signs may be mounted on just the right side of the roadway.

LONGITUDINAL BUFFER LENGTH	
Posted Speed Limit (mph)	Length (ft)
≤30	200
35	250
40	305
45	360
50	425
55	495

LEGEND

- Flagger
- Work Area
- Channelizing Device
- Construction Sign and Supports
- Construction Warning Light, Type A
- Direction of Traffic

INDIANA DEPARTMENT OF TRANSPORTATION

FLAGGER OPERATION FOR HORIZONTAL CURVES SINGLE WORK AREA

SEPTEMBER 2022

STANDARD DRAWING NO. E 801-TCFO-04

DAVID H. BORUFF REGISTERED No. 60900348 STATE OF INDIANA PROFESSIONAL ENGINEER

David H Boruff 05/17/22
DESIGN STANDARDS ENGINEER DATE

06/27/2022
CHIEF ENGINEER DATE

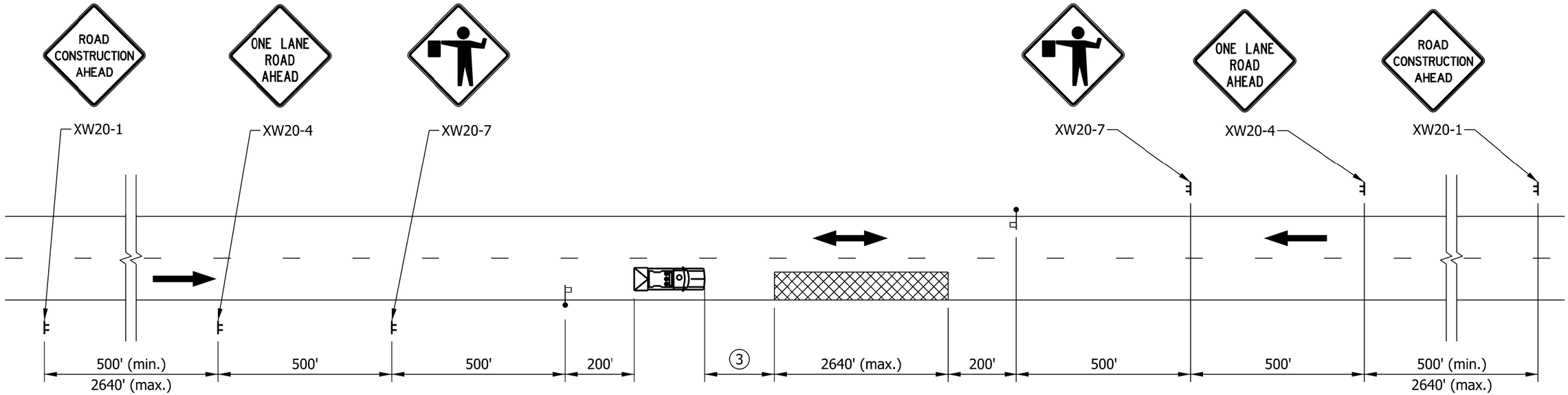

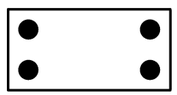

FLASHING ARROW SIGN DETAIL

②

NOTES:

1. Additional signs may be required for the moving operations so as to maintain proper spacing.

② Flashing arrow sign shall be in caution mode.

③ Shadow vehicle roll ahead distance shall be as recommended by the truck mounted attenuator manufacturer.

LEGEND

- Flagger
- Work Area
- Construction Sign and Supports
- Direction of Traffic
- Shadow vehicle with truck-mounted attenuator, type B flashing arrow sign, and strobe lights.

INDIANA DEPARTMENT OF TRANSPORTATION

MAINTENANCE OF TRAFFIC FOR MOBILE OPERATION WITH FLAGGERS FOR TWO LANE ROADS

SEPTEMBER 2022

STANDARD DRAWING NO. E 801-TCFO-05

DAVID H. BORUFF REGISTERED No. 60900348 STATE OF INDIANA PROFESSIONAL ENGINEER

David H. Boruff 05/17/22
DESIGN STANDARDS ENGINEER DATE

06/27/2022
CHIEF ENGINEER DATE

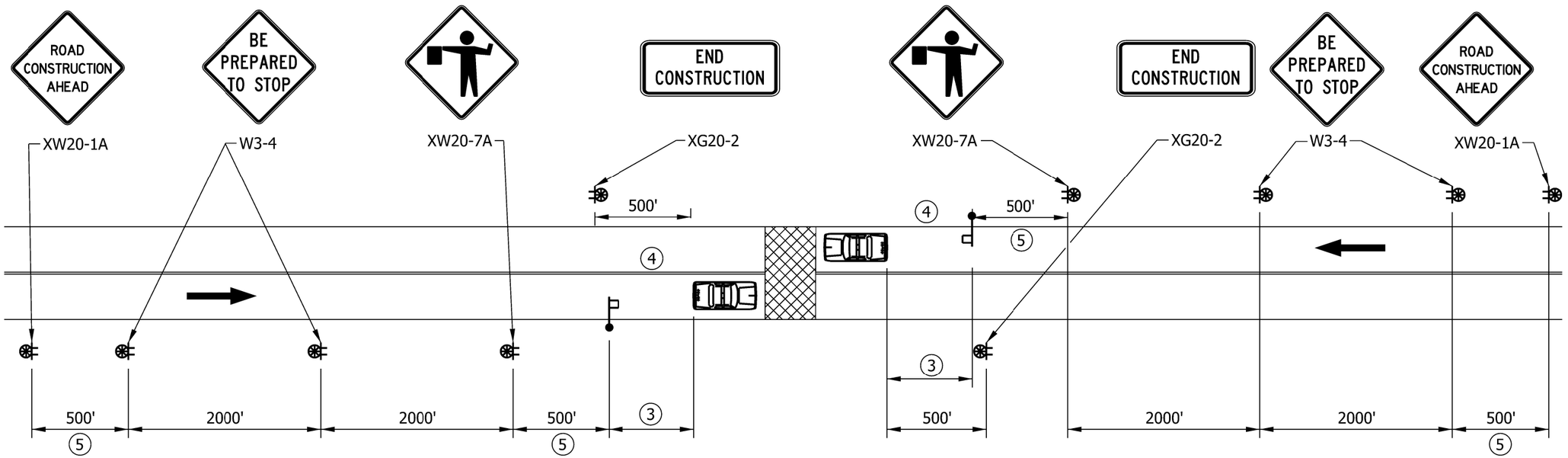

NOTES:

1. Each temporary traffic stoppage shall be limited to 20 minutes.
2. If Automated Flagger Assistance Devices are used, see Part 6 of the MUTCD for set-up requirements.

(3) Longitudinal Buffer Length.

(4) Location for law enforcement vehicles, if present, to supplement flaggers.

(5) In urban areas, the spacing may be reduced to 350 ft for posted speed limits > 30 mph and the spacing may be reduced to 100 ft for posted speed limits ≤ 30 mph.

LONGITUDINAL BUFFER LENGTH	
Posted Speed Limit (mph)	Length (ft)
≤30	200
35	250
40	305
45	360
50	425
55	495

LEGEND

- Flagger
- Work Area
- Police Car
- Construction Sign and Supports
- Construction Warning Light, Type A
- Direction of Traffic

INDIANA DEPARTMENT OF TRANSPORTATION

FLAGGER OPERATION FOR TEMPORARY TRAFFIC STOPPAGE FOR TWO LANE ROADS

SEPTEMBER 2022

STANDARD DRAWING NO. E 801-TCFO-06

DAVID H. BORUFF REGISTERED No. 60900348 STATE OF INDIANA PROFESSIONAL ENGINEER

David H Boruff 05/17/22
DESIGN STANDARDS ENGINEER DATE

06/27/2022
CHIEF ENGINEER DATE

INDEX	
SHEET NO.	SUBJECT
1	Stationary Lane Closure Index and General Notes
2	Long-Term Stationary Freeway Right Lane Closure
3	Short or Intermediate Term Stationary Freeway Right Lane Closure
4	Short or Intermediate Term Stationary Freeway Right Lane Closure with Minor Encroachment
5	Long-Term Stationary Freeway Left Lane Closure
6	Short or Intermediate Term Stationary Freeway Left Lane Closure
7	Short or Intermediate Term Stationary Freeway Left Lane Closure with Minor Encroachment
8	Short or Intermediate Term Stationary Double Lane Closure Freeway for Work in the Center Lane
9	Short or Intermediate Term Stationary Double Lane Closure Freeway with Minor Encroachment
10	Short or Intermediate Term Stationary Freeway Right Lane Closure Near Interchange with Exit Open
11	Traffic Control for Freeway Exit Closure
12	Short or Intermediate Term Stationary Lane Closure on Three Lane Road

LEGEND

- Work Area
- Flashing Arrow Sign
- Channelizing Device
- Construction Sign and Supports
- Removal of Pavement Markings and Prismatic Reflectors
- Type III-A Barricades
- Direction of Traffic
- Low Intensity Construction Warning Light, Type A
- Shadow Vehicle with Truck-Mounted Attenuator, Arrow Board, and Strobe Lights
- Type III-Barricade
- Crash Cushion

GENERAL NOTES:

1. **Short-term stationary**, work that occupies a location for more than one hour within a single daylight period.
   Intermediate-term stationary, work that occupies a location for more than one daylight period up to three days, or nighttime work lasting more than one hour.
   Long-term stationary, work that occupies a location for more than three days.
2. Distances shown may be varied based on field conditions with approval from the Engineer.
3. Unless otherwise noted, the spacing of channelizing devices in tangent sections shall be 100 ft where the posted speed limit is 50 m.p.h. or greater, and the spacing shall be 50 ft where the posted speed limit is less than or equal to 45 m.p.h.
4. Unless otherwise noted, the spacing of channelizing devices in tapers shall be equal in feet to the posted speed limit in m.p.h.
5. The sign spacing shown for freeway lane closures may be reduced to 500 ft for lane closures on rural undivided highways.
6. For interstate lane closures road work 3 miles, road work 2 miles, and road work 1½ mile signs shall be placed in advance of the road work ahead sign.
7. Temporary pavement markings may be omitted for short-term and intermediate-term stationary daylight lane closures.
8. Temporary highway illumination, when specified, shall be as detailed on the plans.
9. Channelizing devices and barrels are schematic and are only intended to show placement and not number or spacing.

INDIANA DEPARTMENT OF TRANSPORTATION

STATIONARY LANE CLOSURE INDEX
AND GENERAL NOTES

SEPTEMBER 2026

STANDARD DRAWING NO. E 801-TCLC-01

DAVID H. BORUFF REGISTERED No. 60900348 STATE OF INDIANA PROFESSIONAL ENGINEER

David H Boruff 4/28/2026
DESIGN STANDARDS ENGINEER DATE

04/29/2026
CHIEF ENGINEER DATE

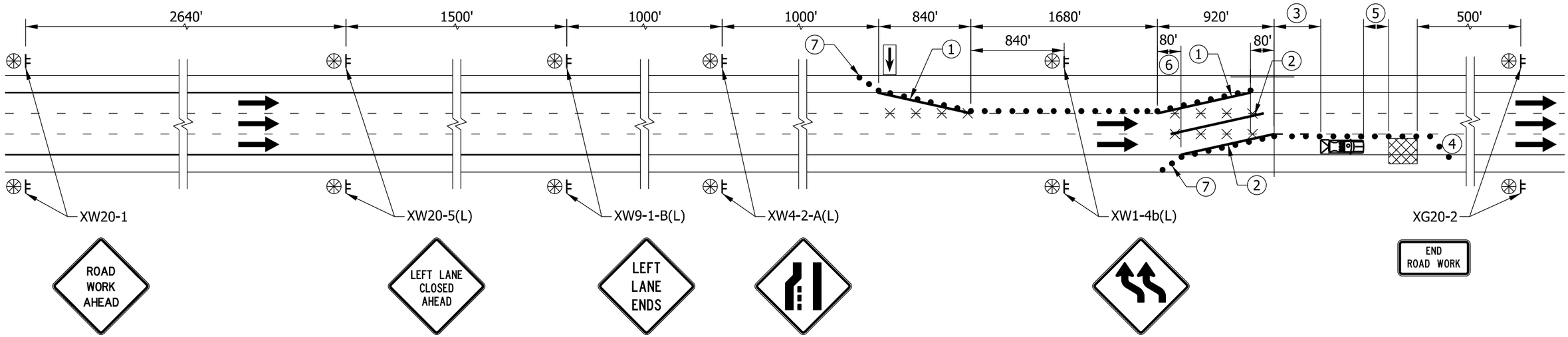

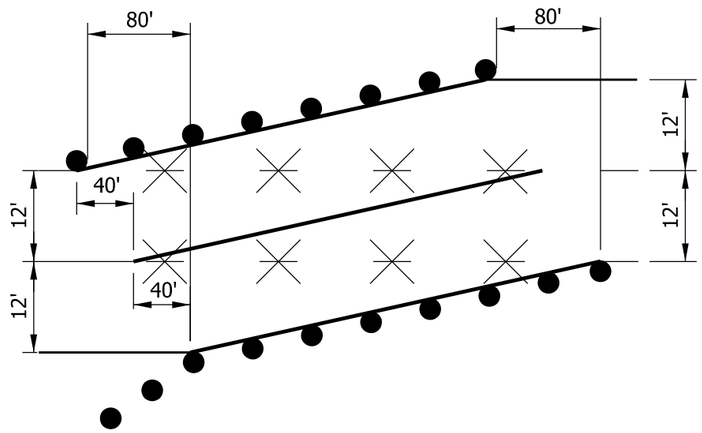

DETAIL A

LONGITUDINAL BUFFER LENGTH	
Posted Speed Limit (mph)	Length (ft)
25	155
30	200
35	250
40	305
45	360
50	425
55	495
60	570
65	645
70	730

NOTES:

(1) Yellow Edge Line

(2) White Edge Line

(3) Longitudinal Buffer Length, see table.

(4) Downstream taper after work area shall extend 100 ft on freeway and drums shall be spaced 20 ft. The downstream taper may be omitted if necessary for work vehicle access.

(5) Shadow vehicle roll ahead distance shall be as recommended by the truck mounted attenuator manufacturer.

(6) Unless otherwise specified on the plans, stagger lane shift to increase lane width through the shift. The temporary lane line in the middle shall be offset 40 ft from each temporary edge line for 12 ft lanes, see Detail A. For double lane shifts that go from 12 ft lanes to 11 ft lanes, the temporary lane line in the middle shall be offset 80 ft from each temporary edge line.

(7) Shoulder taper of ⅓ L. See Standard Drawing series E 801-TCDV for distance, L.

8. Selection of Temporary Traffic Barrier or Channelizing Devices shall be made in accordance with Standard Drawings E 801-TCCB-XX through E 801 TCCB-XX.

INDIANA DEPARTMENT OF TRANSPORTATION

LONG-TERM STATIONARY FREEWAY RIGHT LANE CLOSURE

SEPTEMBER 2026

STANDARD DRAWING NO. E 801-TCLC-02

DAVID H. BORUFF REGISTERED No. 60900348 STATE OF INDIANA PROFESSIONAL ENGINEER

David H Boruff 4/28/2026

DESIGN STANDARDS ENGINEER DATE

04/29/2026

CHIEF ENGINEER DATE

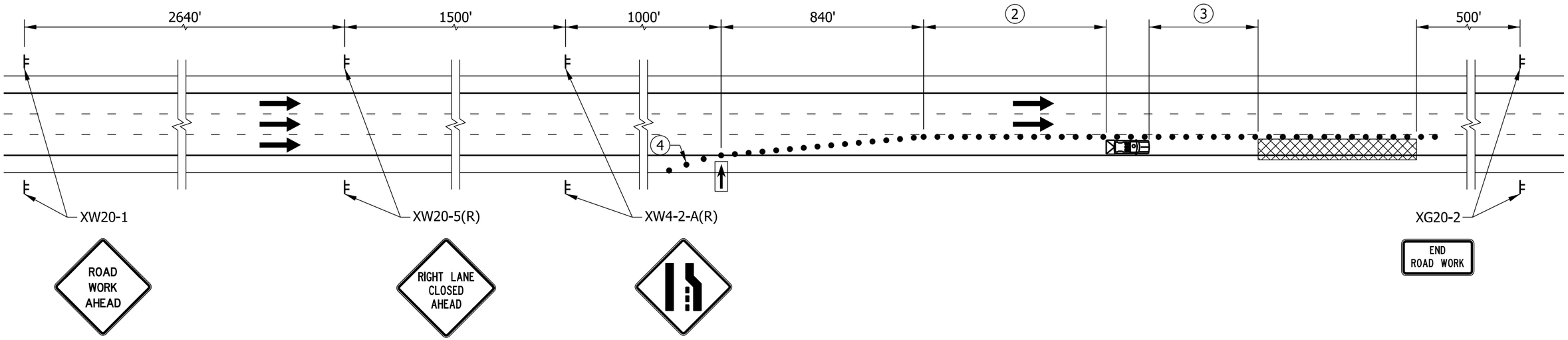

NOTES:

1. See Standard Drawing series E 801-TCDV for merge distance, L.

(2) Longitudinal Buffer Length, see table.

(3) Shadow vehicle roll ahead distance shall be as recommended by the truck mounted attenuator manufacturer.

(4) Shoulder taper of ⅓ L.

LONGITUDINAL BUFFER LENGTH	
Posted Speed Limit (mph)	Length (ft)
25	155
30	200
35	250
40	305
45	360
50	425
55	495
60	570
65	645
70	730

INDIANA DEPARTMENT OF TRANSPORTATION

SHORT OR INTERMEDIATE TERM STATIONARY FREEWAY RIGHT LANE CLOSURE

SEPTEMBER 2026

STANDARD DRAWING NO. E 801-TCLC-03

DAVID H. BORUFF REGISTERED No. 60900348 STATE OF INDIANA PROFESSIONAL ENGINEER

David H Boruff 4/28/2026

DESIGN STANDARDS ENGINEER DATE

04/29/2026

CHIEF ENGINEER DATE

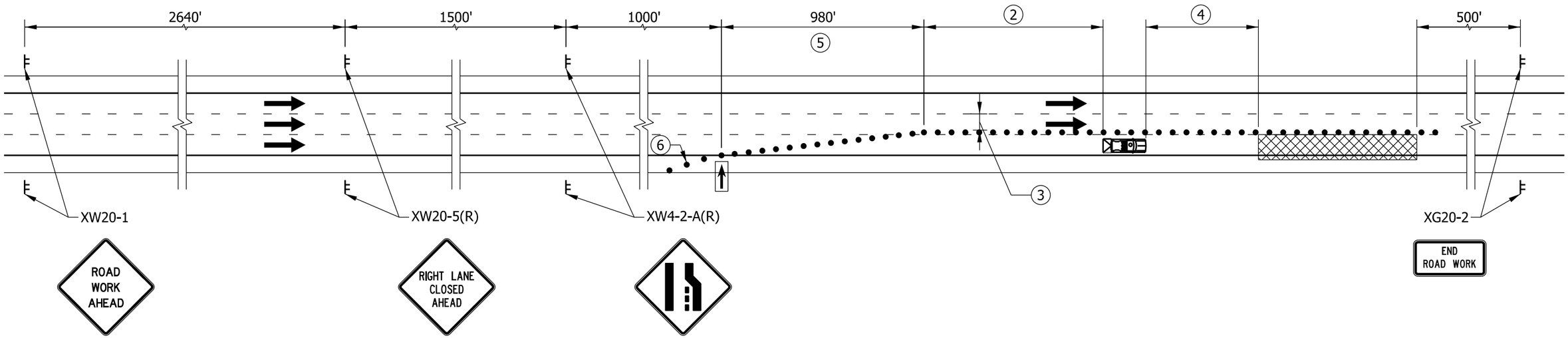

NOTES:

1. See Standard Drawing series E 801-TCDV for merge distance, L.
2. Longitudinal Buffer Length, see table.
3. Lane width shall be a minimum width of 10 ft.
4. Shadow vehicle roll ahead distance shall be as recommended by the truck mounted attenuator manufacturer.
5. Use a separate shift taper separated by a distance of 2L if a merge taper is wider than 14 ft.
6. Shoulder taper of ⅓ L.

LONGITUDINAL BUFFER LENGTH	
Posted Speed Limit (mph)	Length (ft)
25	155
30	200
35	250
40	305
45	360
50	425
55	495
60	570
65	645
70	730

INDIANA DEPARTMENT OF TRANSPORTATION

SHORT OR INTERMEDIATE TERM STATIONARY FREEWAY RIGHT LANE CLOSURE WITH MINOR ENCROACHMENT

SEPTEMBER 2026

STANDARD DRAWING NO. E 801-TCLC-04

DAVID H. BORUFF REGISTERED No. 60900348 STATE OF INDIANA PROFESSIONAL ENGINEER

David H Boruff 4/28/2026

DESIGN STANDARDS ENGINEER DATE

04/29/2026

CHIEF ENGINEER DATE

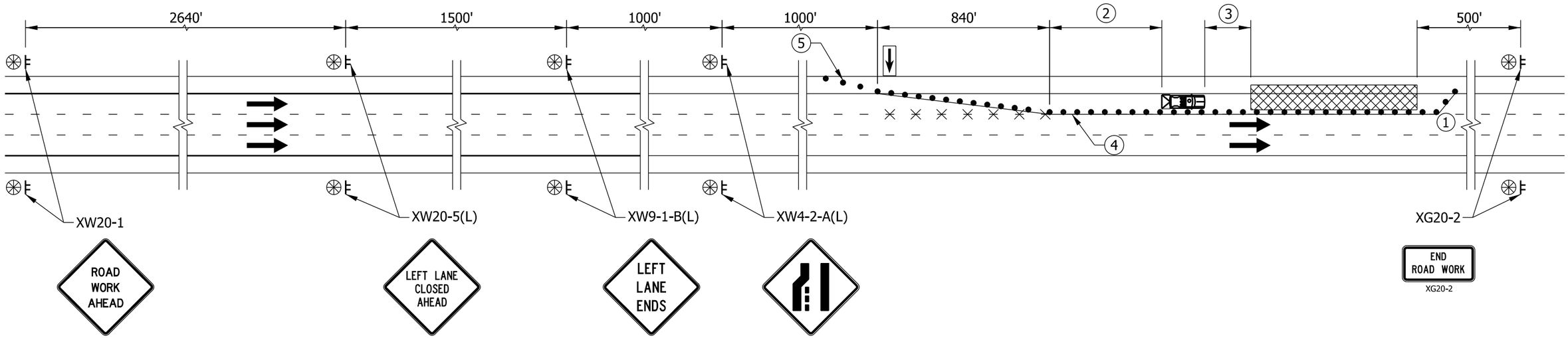

NOTES:

(1) The downstream taper after work area shall extend 100 ft of roadway and drums shall be spaced 20 ft. The downstream taper may be omitted if necessary for work vehicle access.

(2) Longitudinal Buffer Length, see table

(3) Shadow vehicle roll ahead distance shall be as recommended by the truck mounted attenuator manufacturer.

(4) Yellow Edge Line

(5) Shoulder taper of ⅓ L. See Standard Drawing series E 801-TCDV for distance, L.

LONGITUDINAL BUFFER LENGTH	
Posted Speed Limit (mph)	Length (ft)
25	155
30	200
35	250
40	305
45	360
50	425
55	495
60	570
65	645
70	730

INDIANA DEPARTMENT OF TRANSPORTATION

LONG-TERM STATIONARY FREEWAY LEFT LANE CLOSURE

SEPTEMBER 2026

STANDARD DRAWING NO. E 801-TCLC-05

DAVID H. BORUFF REGISTERED No. 60900348 STATE OF INDIANA PROFESSIONAL ENGINEER

4/28/2026
DESIGN STANDARDS ENGINEER DATE

04/29/2026
CHIEF ENGINEER DATE

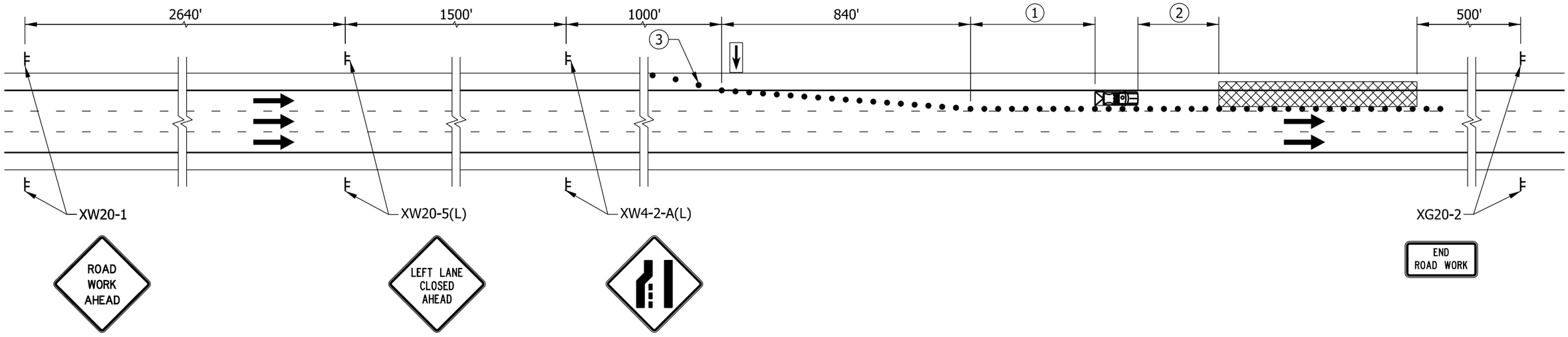

NOTES:

1. Longitudinal Buffer Length, see table.
2. Shadow vehicle roll ahead distance shall be as recommended by the truck mounted attenuator manufacturer.
3. Shoulder taper of ⅓ L. See Standard Drawing series E 801-TCDV for distance, L.

LONGITUDINAL BUFFER LENGTH	
Posted Speed Limit (mph)	Length (ft)
25	155
30	200
35	250
40	305
45	360
50	425
55	495
60	570
65	645
70	730

INDIANA DEPARTMENT OF TRANSPORTATION

SHORT OR INTERMEDIATE TERM STATIONARY FREEWAY LEFT LANE CLOSURE

SEPTEMBER 2026

STANDARD DRAWING NO. E 801-TCLC-06

DAVID H. BORUFF REGISTERED No. 60900348 STATE OF INDIANA PROFESSIONAL ENGINEER

David H Boruff 4/28/2026

DESIGN STANDARDS ENGINEER DATE

04/29/2026

CHIEF ENGINEER DATE

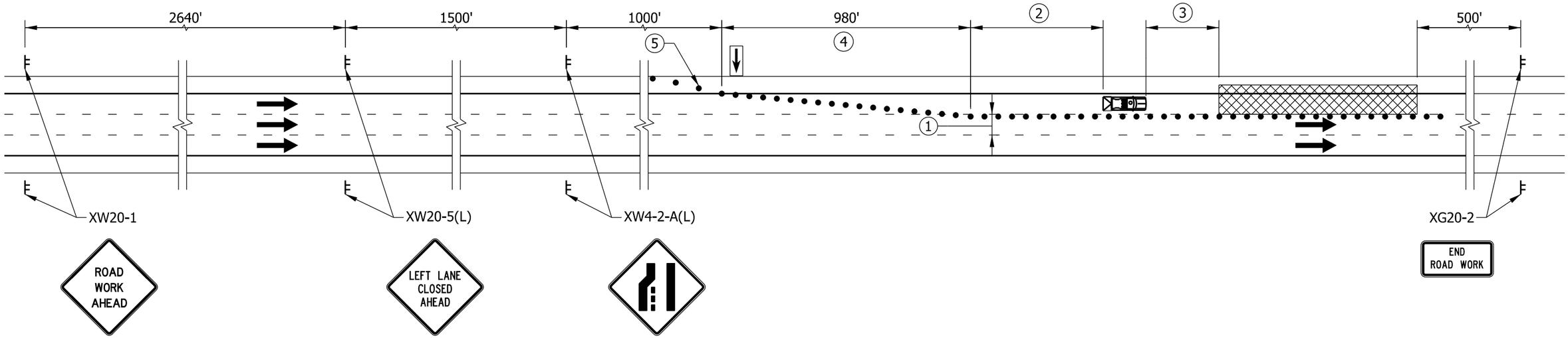

NOTES:

(1) 10 ft minimum lane width

(2) Longitudinal Buffer Length, see table

(3) Shadow vehicle roll ahead distance shall be as recommended by the truck mounted attenuator manufacturer.

(4) Use a separate shift taper separated by a distance of 2L if a merge taper is wider than 14 ft.

(5) Shoulder taper of ⅓ L, see Standard Drawing series E 801-TCDV for distance, L.

LONGITUDINAL BUFFER LENGTH	
Posted Speed Limit (mph)	Length (ft)
25	155
30	200
35	250
40	305
45	360
50	425
55	495
60	570
65	645
70	730

INDIANA DEPARTMENT OF TRANSPORTATION

SHORT OR INTERMEDIATE TERM STATIONARY FREEWAY LEFT LANE CLOSURE WITH MINOR ENCROACHMENT

SEPTEMBER 2026

STANDARD DRAWING NO. E 801-TCLC-07

DAVID H. BORUFF REGISTERED No. 60900348 STATE OF INDIANA PROFESSIONAL ENGINEER

David H Boruff 4/28/2026

DESIGN STANDARDS ENGINEER DATE

04/29/2026

CHIEF ENGINEER DATE

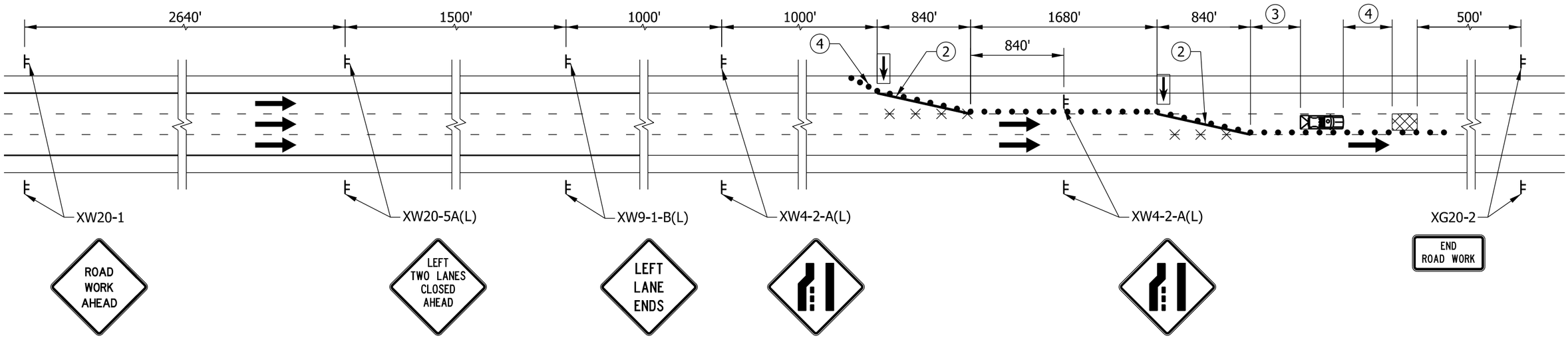

NOTES:

1. Use temporary concrete traffic barrier or reversible lane with moveable barrier in lieu of drums if required by the designer.

(2) Yellow Edge Line

(3) Longitudinal Buffer Length, see table.

(4) Shoulder taper ⅓ L. See Standard Drawing series 801-TCDV for distance, L.

LONGITUDINAL BUFFER LENGTH	
Posted Speed Limit (mph)	Length (ft)
25	155
30	200
35	250
40	305
45	360
50	425
55	495
60	570
65	645
70	730

INDIANA DEPARTMENT OF TRANSPORTATION

SHORT OR INTERMEDIATE TERM STATIONARY DOUBLE LANE CLOSURE FOR WORK IN THE CENTER LANE

SEPTEMBER 2026

STANDARD DRAWING NO. E 801-TCLC-08

DAVID H. BORUFF REGISTERED No. 60900348 STATE OF INDIANA PROFESSIONAL ENGINEER

David H Boruff 4/28/2026

DESIGN STANDARDS ENGINEER DATE

04/29/2026

CHIEF ENGINEER DATE

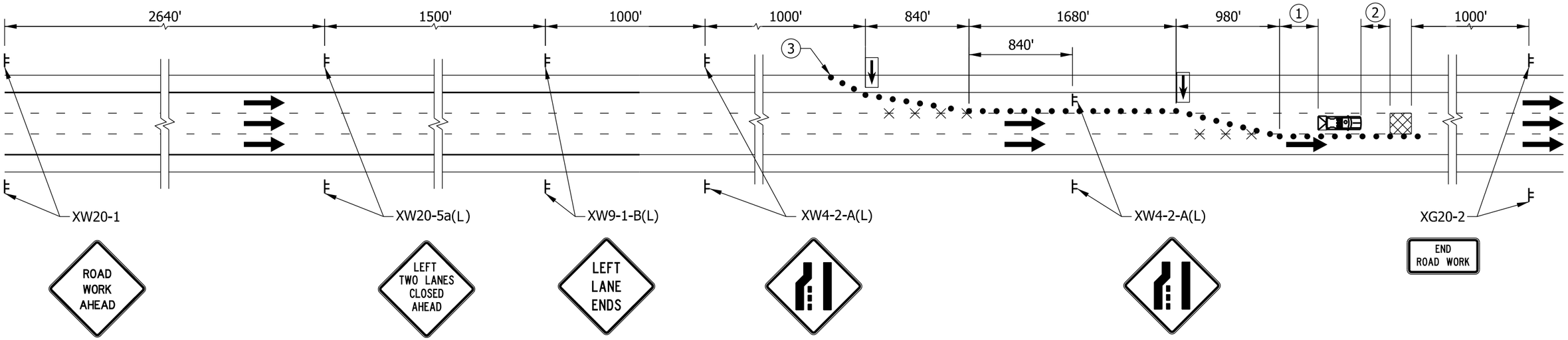

NOTES:

(1) Longitudinal Buffer Length, see table.

(2) Shadow vehicle roll ahead distance shall be as recommended by the truck mounted attenuator manufacturer.

(3) Shoulder taper of ⅓ L, see Standard Drawing series E 801-TCDV for distance, L.

LONGITUDINAL BUFFER LENGTH	
Posted Speed Limit (mph)	Length (ft)
25	155
30	200
35	250
40	305
45	360
50	425
55	495
60	570
65	645
70	730

INDIANA DEPARTMENT OF TRANSPORTATION

SHORT OR INTERMEDIATE TERM STATIONARY FREEWAY DOUBLE LANE CLOSURE WITH MINOR ENCROACHMENT

SEPTEMBER 2026

STANDARD DRAWING NO. E 801-TCLC-09

DAVID H. BORUFF REGISTERED No. 60900348 STATE OF INDIANA PROFESSIONAL ENGINEER

David H Boruff 4/28/2026

DESIGN STANDARDS ENGINEER DATE

04/29/2026

CHIEF ENGINEER DATE

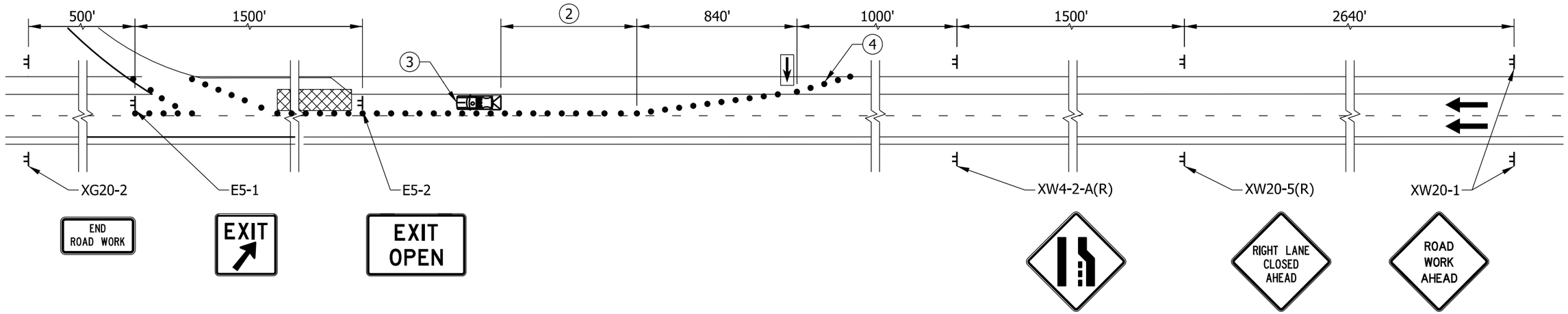

NOTES:

1. See Standard Drawing series E 801-TCDV for merge distance, L.
2. (2) Longitudinal Buffer Length, see table.
3. (3) Shadow vehicle roll ahead distance shalll be as recommended by the truck mounted attenuator manufacturer.
4. (4) Shoulder taper of ⅓ L.

LONGITUDINAL BUFFER LENGTH	
Posted Speed Limit (mph)	Length (ft)
25	155
30	200
35	250
40	305
45	360
50	425
55	495
60	570
65	645
70	730

INDIANA DEPARTMENT OF TRANSPORTATION

SHORT OR INTERMEDIATE TERM STATIONARY FREEWAY RIGHT LANE CLOSURE NEAR INTERCHANGE WITH EXIT OPEN

SEPTEMBER 2026

STANDARD DRAWING NO. E 801-TCLC-10

DAVID H. BORUFF REGISTERED No. 60900348 STATE OF INDIANA PROFESSIONAL ENGINEER

David H Boruff 4/28/2026

DESIGN STANDARDS ENGINEER DATE

04/29/2026

CHIEF ENGINEER DATE

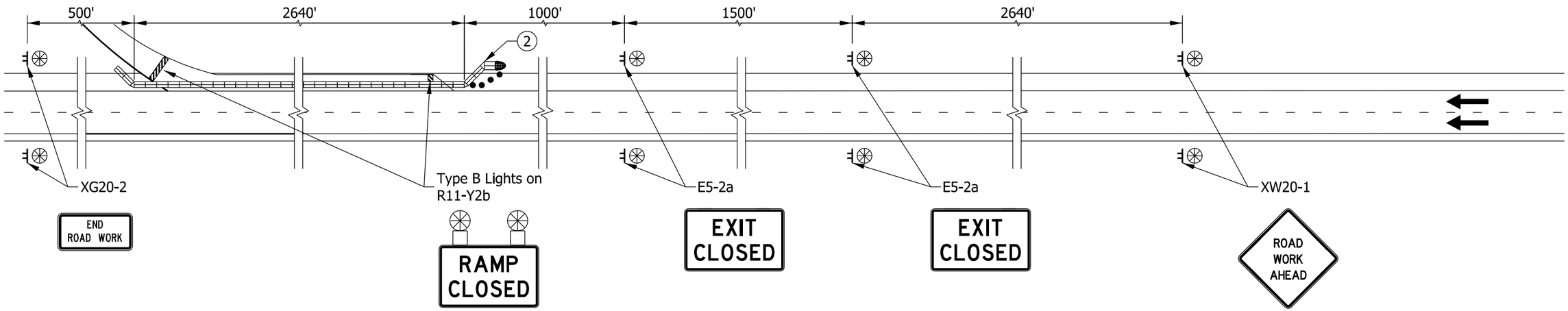

NOTES:

1. Temporary traffic barrier shall be used for long-term stationary work. For short-term or intermediate-term stationary work, drums spaced at 20 ft may be used in lieu of temporary traffic barrier.

(2) Flared temporary traffic barrier or approved end treatment flare rate 16:1 to edge of shoulder.

INDIANA DEPARTMENT OF TRANSPORTATION

TRAFFIC CONTROL FOR
FREEWAY EXIT CLOSURE

SEPTEMBER 2026

STANDARD DRAWING NO. E 801-TCLC-11

DAVID H. BORUFF
REGISTERED
No.
60900348
STATE OF
INDIANA
PROFESSIONAL ENGINEER

David H Boruff 4/28/2026
DESIGN STANDARDS ENGINEER DATE

04/29/2026
CHIEF ENGINEER DATE

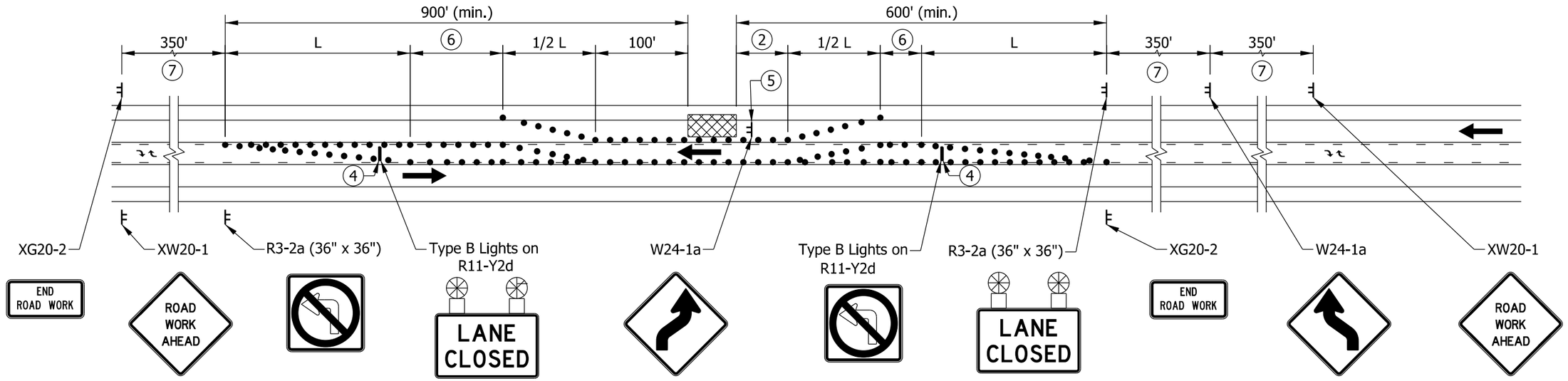

NOTES:

1. See Standard Drawing series E 801-TCDV for merge distance, L.

(2) Longitudinal Buffer Length, see table.

3. R3-2A must be repeated at each intersection and at class 3 and 4 drives.

(4) Type III Barricade

(5) The lane-shift sign shall be placed 350 ft in advance of the return lane-shift.

(6) Access Control Buffer, if required.

(7) For urban locations where the speed limit is ≤ 35 mph, the sign spacing may be reduced to 100 ft.

LONGITUDINAL BUFFER LENGTH	
Posted Speed Limit (mph)	Length (ft)
25	155
30	200
35	250
40	305
45	360
50	425
55	495
60	570
65	645
70	730

INDIANA DEPARTMENT OF TRANSPORTATION

SHORT OR INTERMEDIATE TERM STATIONARY LANE CLOSURE ON THREE LANE ROAD

SEPTEMBER 2026

STANDARD DRAWING NO. E 801-TCLC-12

DAVID H. BORUFF REGISTERED No. 60900348 STATE OF INDIANA PROFESSIONAL ENGINEER

David H Boruff 4/28/2026

DESIGN STANDARDS ENGINEER DATE

04/29/2026

CHIEF ENGINEER DATE

GENERAL NOTES:

1. Distances shown are typical except minimum distances may be varied based on field conditions.
2. The spacing of channelizing devices shall be 100 ft where the posted speed limit is 50 m.p.h. or greater.
3. The spacing of channelizing devices shall be 50 ft where the posted speed limit is less than or equal to 45 m.p.h.
4. The spacing of channelizing devices on tapers shall be numerically equal in feet to the posted speed limit in m.p.h.
5. The flashing arrow sign shall not be placed on a sidewalk. The flashing arrow sign shall be placed at a distance of L/3 from the beginning of the taper, where L is the merge taper, see Standard Drawing E 801-TCDV-03.
6. For temporary lane closures during daylight hours, cones or tubular markers may be used in lieu of drums.
7. Temporary pavement markings shall not be required for temporary daylight lane closures.
8. Temporary highway illumination, when specified, shall be as detailed on the plans.

(9) Once the crossovers have been removed, this line shall be restriped yellow if the pavement is to be used for one-way traffic.

(10) For Temporary Crossover Type B, this line shall be removed when the traffic pattern is switched.

(11) The advisory speed plate will not be required when the existing posted speed limit is less than 55 mph.

(12) Spacing of channelizing devices at this location shall be 20 ft.

(13) The "Two-Way Traffic" (XW6-3B) and "Do Not Pass" (R4-1-B) signs shall alternate every 2640 ft throughout the two-lane two-way operation.

(14) For a bridge contract, this distance may be adjusted by the Engineer as required. However, it shall be as close to the minimum as possible.

(15) Once the crossovers have been removed, this line shall be restriped broken white, if the pavement is to be used for one-way traffic.

SURFACE AREA OF ONE TYPE A TEMPORARY CROSSOVER, SYS	
MEDIAN WIDTH, ft	TYPE A
60	1208
50	1041
40	880
36	814
30	713
26	648

LEGEND

Flagger

Work area

Flashing arrow sign

Channelizing device

Police car (optional)

Construction sign and supports

W = Width of offset

Temporary Pavement Marking

Removal of pavement markings and prismatic reflectors

Typical Sign Standard (Road Closure Sign Assembly)

Type III-A or Type III-B Barricades as required

Double Headed Flashing Arrow Sign

Direction of Traffic

Low intensity construction warning light, Type A

INDIANA DEPARTMENT OF TRANSPORTATION

TRAFFIC CONTROL
LEGEND AND GENERAL NOTES

SEPTEMBER 2016

STANDARD DRAWING NO. E 801-TCLG-01

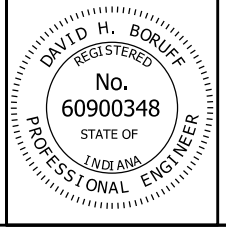

/s/ David H. Boruff 03/02/16
DESIGN STANDARDS ENGINEER DATE

/s/ Mark A. Miller 03/02/16
CHIEF ENGINEER DATE

INDEX

SHEET NO.	SUBJECT
1	Mobile Operation, Index and General Note
2	Traffic Control for Mobile Operation on a Divided Highway
3	Maintenance of Traffic for RPM Reflector Replacement Near Exit Ramp
4	Maintenance of Traffic for RPM Reflector Replacement Near Entrance Ramp

GENERAL NOTE:

1. Strobe lights shall be used on all shadow vehicles.

INDIANA DEPARTMENT OF TRANSPORTATION

MOBILE OPERATION,
INDEX AND GENERAL NOTE

SEPTEMBER 2022

STANDARD DRAWING NO. E 801-TCMO-01

DAVID H. BORUFF
REGISTERED
No.
60900348
STATE OF
INDIANA
PROFESSIONAL ENGINEER

David H Boruff 05/17/22
DESIGN STANDARDS ENGINEER DATE

07/06/2022
CHIEF ENGINEER DATE

NOTES:

1. Use XW20-5 sign or portable changeable message sign equivalent if speed limit is > 35 mph.
2. If required by the Engineer, deploy additional shadow vehicles with XW20-5 sign ¼ mi. in advance of any queue or as directed.
3. Shadow vehicle roll ahead distance shall be as recommended by the truck mounted attenuator manufacturer.

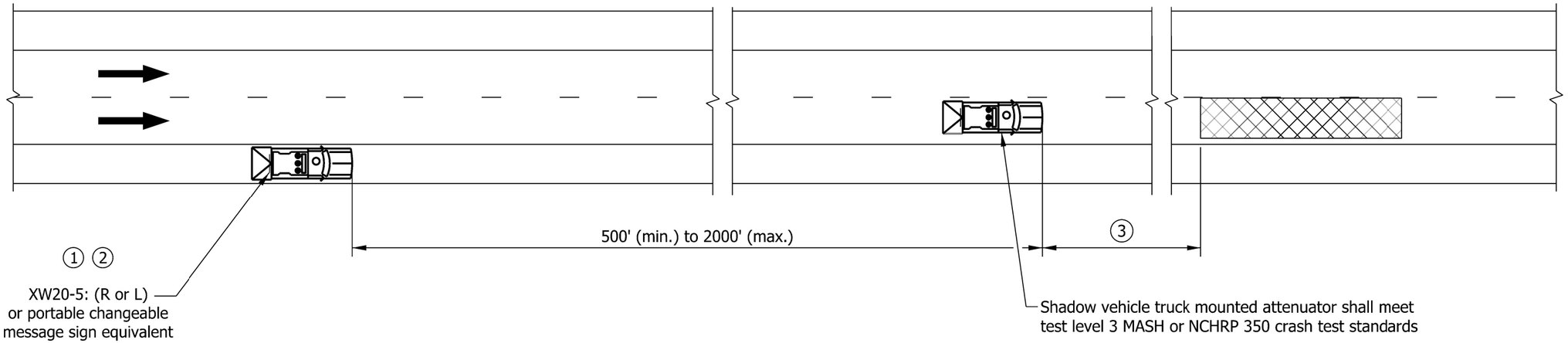

LEGEND

- Shadow Vehicle with Truck Mounted Attenuator and Type B Flashing Arrow Sign
- Mobile Work Area
- Direction of Traffic

INDIANA DEPARTMENT OF TRANSPORTATION

TRAFFIC CONTROL FOR MOBILE
OPERATION ON A DIVIDED HIGHWAY

SEPTEMBER 2022

STANDARD DRAWING NO. E 801-TCMO-02

DAVID H. BORUFF REGISTERED No. 60900348 STATE OF INDIANA PROFESSIONAL ENGINEER

David H Boruff 05/17/22
DESIGN STANDARDS ENGINEER DATE

07/06/2022
CHIEF ENGINEER DATE

NOTES:

1. Shadow vehicle is not required if posted speed is ≤ 35 mph.
2. If required by the Engineer, deploy additional shadow vehicles with XW20-5R sign ¼ mi. in advance of any queue.
3. Shadow vehicle roll ahead distance shall be as recommended by the truck mounted attenuator manufacturer.
4. Shadow vehicle truck mounted attenuator shall meet test level 3 MASH or NCHRP 350 crash test standards.

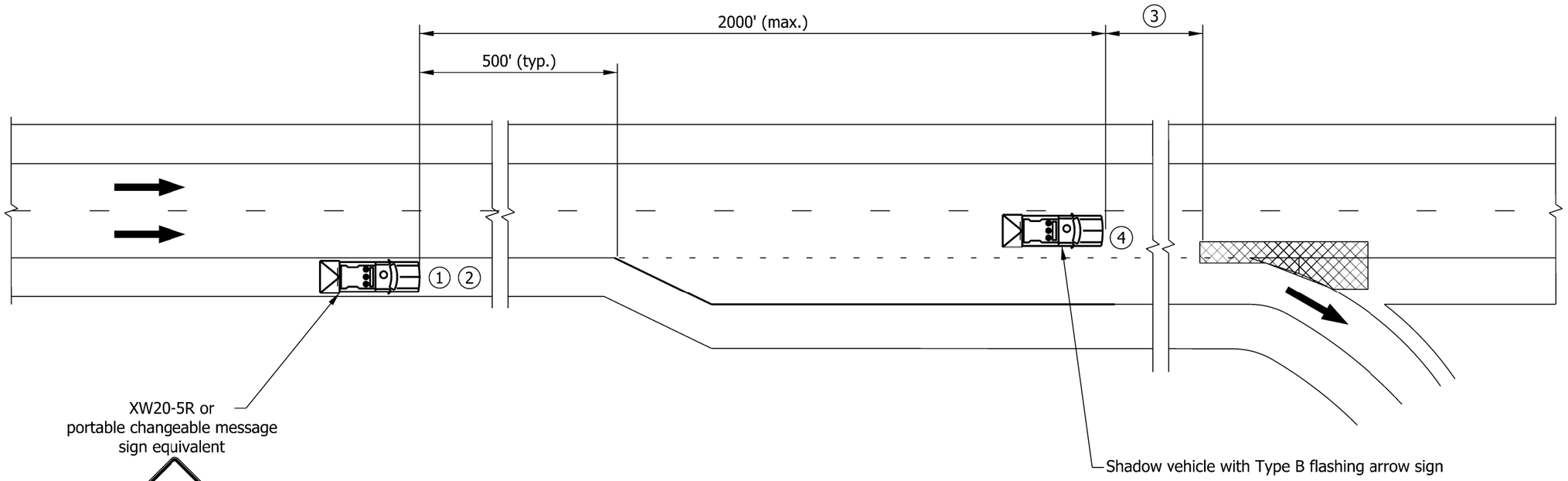

LEGEND

- Shadow Vehicle with Truck Mounted Attenuator
- Mobile Work Area
- Direction of Traffic

INDIANA DEPARTMENT OF TRANSPORTATION

MAINTENANCE OF TRAFFIC FOR RPM
REFLECTOR REPLACEMENT NEAR
EXIT RAMP
SEPTEMBER 2022

STANDARD DRAWING NO. E 801-TCMO-03

DAVID H. BORUFF
REGISTERED
No.
60900348
STATE OF
INDIANA
PROFESSIONAL ENGINEER

David H Boruff 05/17/22
DESIGN STANDARDS ENGINEER DATE

07/06/2022
CHIEF ENGINEER DATE

NOTES:

1. Shadow vehicle is not required if posted speed is ≤ 35 mph.
2. If required by the Engineer, deploy additional shadow vehicles with XW20-5R sign ¼ mi. in advance of any queue or as directed.
3. Shadow vehicle roll ahead distance shall be as recommended by the truck mounted attenuator manufacturer.
4. Shadow vehicle truck mounted attenuator shall meet test level 3 MASH or NCHRP 350 crash test standards.

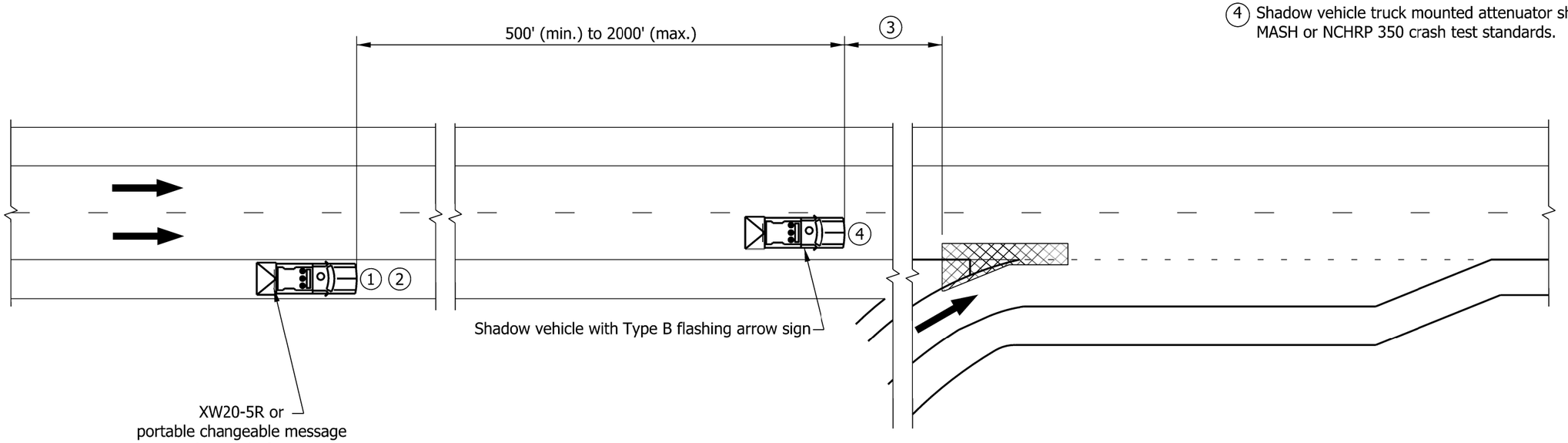

LEGEND

- Shadow Vehicle with Truck Mounted Attenuator
- Mobile Work Area
- Direction of Traffic

INDIANA DEPARTMENT OF TRANSPORTATION

MAINTENANCE OF TRAFFIC FOR RPM REFLECTOR REPLACEMENT NEAR ENTRANCE RAMP

SEPTEMBER 2022

STANDARD DRAWING NO. E 801-TCMO-04

DAVID H. BORUFF REGISTERED No. 60900348 STATE OF INDIANA PROFESSIONAL ENGINEER

David H Boruff 05/17/22

DESIGN STANDARDS ENGINEER DATE

07/06/2022

CHIEF ENGINEER DATE

INDEX	
SHEET NO.	SUBJECT
1	Shoulder Closures, Index and General Notes
2	Advance Signing for Interstate Shoulder Closures
3	Shoulder Closure on Freeway or Expressway
4	Freeway Shoulder Closure for Roadside Work
5	Shoulder Closure on Divided Highway with Local Access
6	Shoulder Closure on Two-Lane Highway with Local Access

LEGEND

- Temporary Traffic Barrier
- Channelizing Device
- Construction Sign and Supports
- Construction Warning Light, Type A
- Direction of Traffic
- Crash Cushion
- Work Area

GENERAL NOTES:

1. Unless otherwise noted, the spacing of channelizing devices in tangent sections shall be 100 ft where the posted speed limit is 50 mph or greater, and the spacing shall be 50 ft where the posted speed limit is less than or equal to 45 mph.
2. Unless otherwise noted, the spacing of channelizing devices in tapers shall be equal in feet to 1.0 times the posted speed limit in mph.
3. Channelizing devices as shown are schematic, the number of channelizing devices will vary based on field conditions.
4. The longitudinal buffer space is an area that provides recovery space for an errant vehicle. Values in the table below may be used to determine the length of the longitudinal buffer.

LONGITUDINAL BUFFER LENGTH	
Posted Speed Limit (mph)	Length (ft)
≤30	200
35	250
40	305
45	360
50	425
55	495

INDIANA DEPARTMENT OF TRANSPORTATION

SHOULDER CLOSURES, INDEX AND GENERAL NOTES

SEPTEMBER 2022

STANDARD DRAWING NO. E 801-TCSC-01

DAVID H. BORUFF REGISTERED No. 60900348 STATE OF INDIANA PROFESSIONAL ENGINEER

David H Boruff 05/17/22

DESIGN STANDARDS ENGINEER DATE

07/07/2022

CHIEF ENGINEER DATE

NOTES:

1. For sign sequence continuation, see freeway shoulder closure in Standard Drawing E 801-TCSC-03.
2. Advance signing is not required for work zone durations ≤ 1 hr.

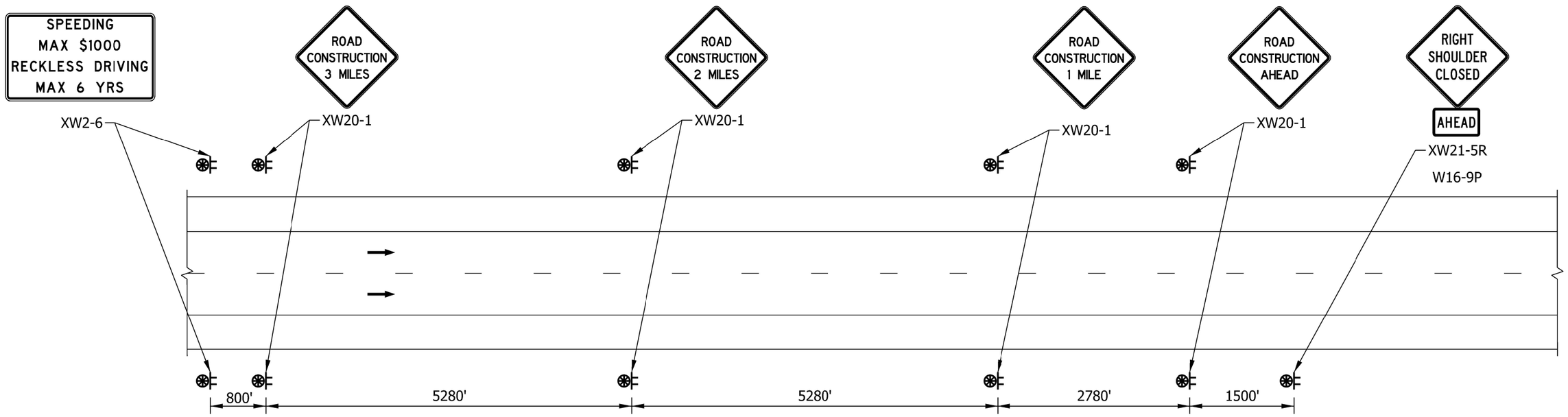

LEGEND

- Construction Sign and Supports
- Construction Warning Light, Type A
- Direction of Traffic

INDIANA DEPARTMENT OF TRANSPORTATION

ADVANCE SIGNING FOR
INTERSTATE SHOULDER CLOSURE

SEPTEMBER 2022

STANDARD DRAWING NO. E 801-TCSC-02

DAVID H. BORUFF
REGISTERED
No. 60900348
STATE OF INDIANA
PROFESSIONAL ENGINEER

05/17/22
DESIGN STANDARDS ENGINEER DATE

07/07/2022
CHIEF ENGINEER DATE

NOTES:

1. Longitudinal Buffer Length, see table.
2. Flared rate for temporary traffic barrier shall be 16:1 to edge of shoulder or approved end treatment shall be used.
3. Drums may be used for freeway shoulder closures of 3 days or less.
4. A 2 ft shy distance shall be provided from the edge of the travel lane to both the temporary traffic barrier and drums unless approved by the Engineer.
5. Tangent openings may be up to 100 ft and flared openings may be up to 60 ft.
6. See Standard Drawing series E 801-TCDV for distance, L.

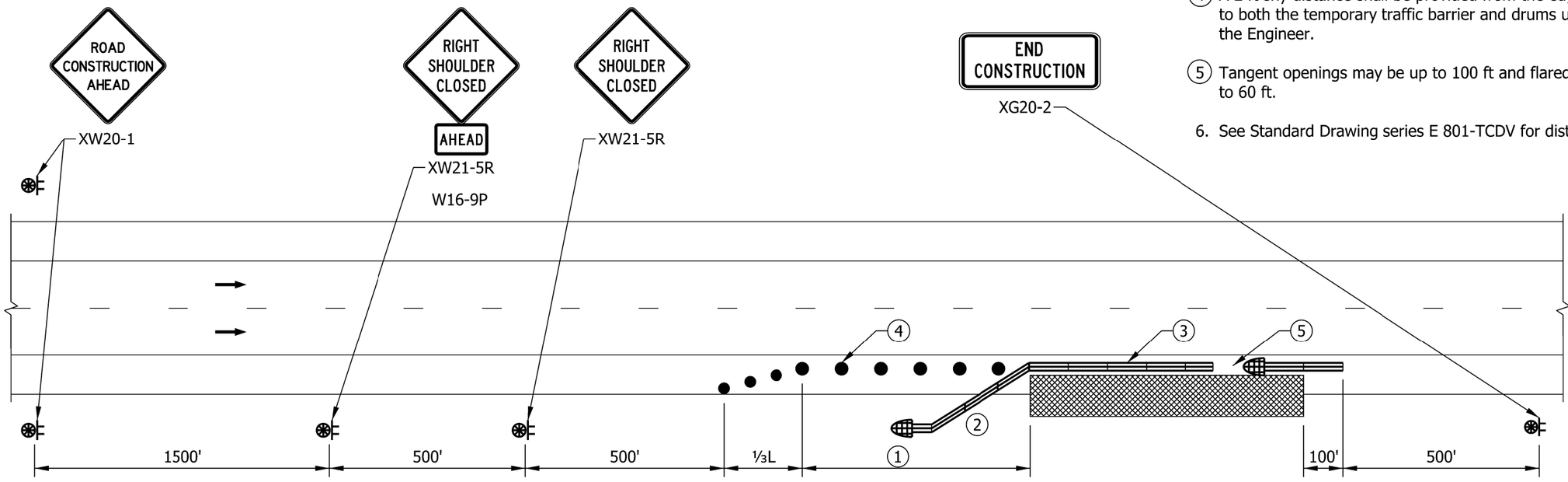

LEGEND

- Temporary Traffic Barrier
- Channelizing Device
- Construction Sign and Supports
- Construction Warning Light, Type A
- Direction of Traffic
- Crash Cushion
- Work Area

LONGITUDINAL BUFFER LENGTH	
Posted Speed Limit (mph)	Length (ft)
≤30	200
35	250
40	305
45	360
50	425
55	495
60	570
65	645
70	730

INDIANA DEPARTMENT OF TRANSPORTATION

SHOULDER CLOSURE ON
FREEWAY OR EXPRESSWAY

SEPTEMBER 2022

STANDARD DRAWING NO. E 801-TCSC-03

DAVID H. BORUFF
REGISTERED
No. 60900348
STATE OF INDIANA
PROFESSIONAL ENGINEER

David H Boruff 05/17/22
DESIGN STANDARDS ENGINEER DATE

07/07/2022
CHIEF ENGINEER DATE

NOTES:

1. Temporary traffic barrier shall be used in place of drums for work that occupies a location for more than 14 days.

(2) Longitudinal Buffer Length, see table.

(3) A 2 ft shy distance shall be provided from the edge of the travel lane to the drums or temporary traffic barrier unless approved by the Engineer.

4. See Standard Drawing series E 801-TCDV for distance, L.

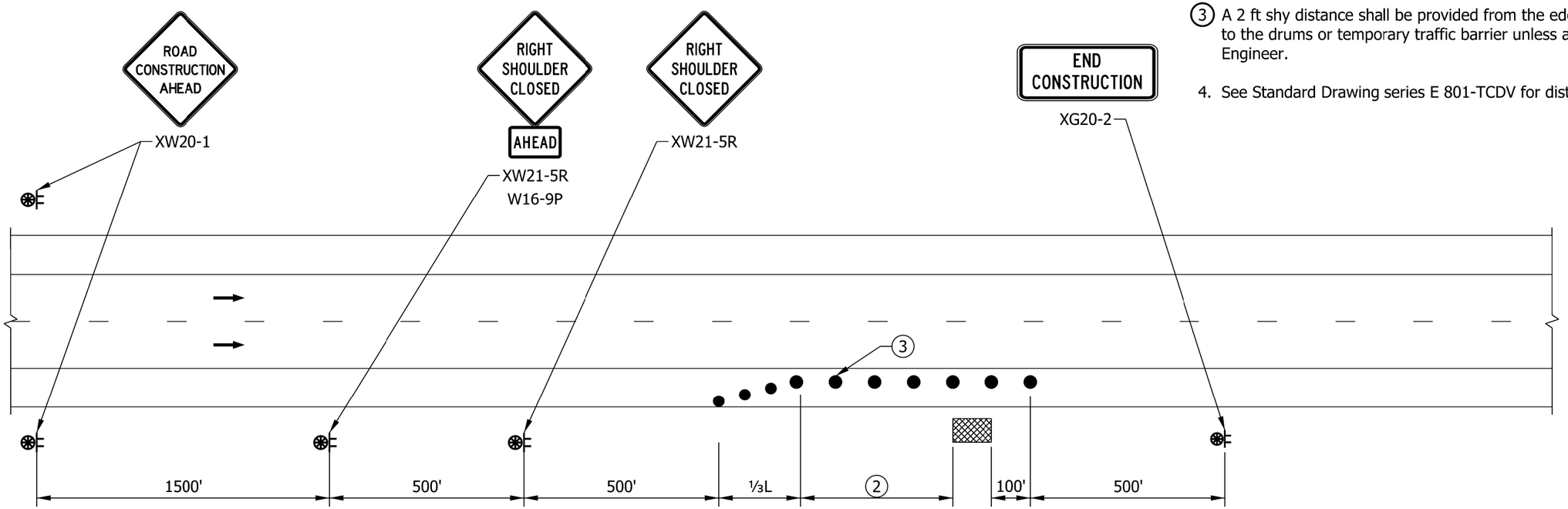

LEGEND

- Work Area
- Channelizing Device
- Construction Sign and Supports
- Construction Warning Light, Type A
- Direction of Traffic

LONGITUDINAL BUFFER LENGTH	
Posted Speed Limit (mph)	Length (ft)
≤30	200
35	250
40	305
45	360
50	425
55	495
60	570
65	645
70	730

INDIANA DEPARTMENT OF TRANSPORTATION

FREEWAY SHOULDER CLOSURE FOR ROADSIDE WORK

SEPTEMBER 2022

STANDARD DRAWING NO. E 801-TCSC-04

DAVID H. BORUFF REGISTERED No. 60900348 STATE OF INDIANA PROFESSIONAL ENGINEER

David H Boruff 05/17/22
DESIGN STANDARDS ENGINEER DATE

07/07/2022
CHIEF ENGINEER DATE

NOTES:

1. Longitudinal Buffer Length, see table.
2. For posted speeds > 45 mph, the flare rate for temporary traffic barrier shall be 16:1 or approved end treatment shall be used.
3. See Standard Drawing series E 801-TCDV for distance, L.
4. Drums or other channelizing devices may be used for shoulder closures of 3 days or less.
5. A 2 ft shy distance shall be provided from the edge of the travel lane to the temporary traffic unless otherwise approved by the Engineer.

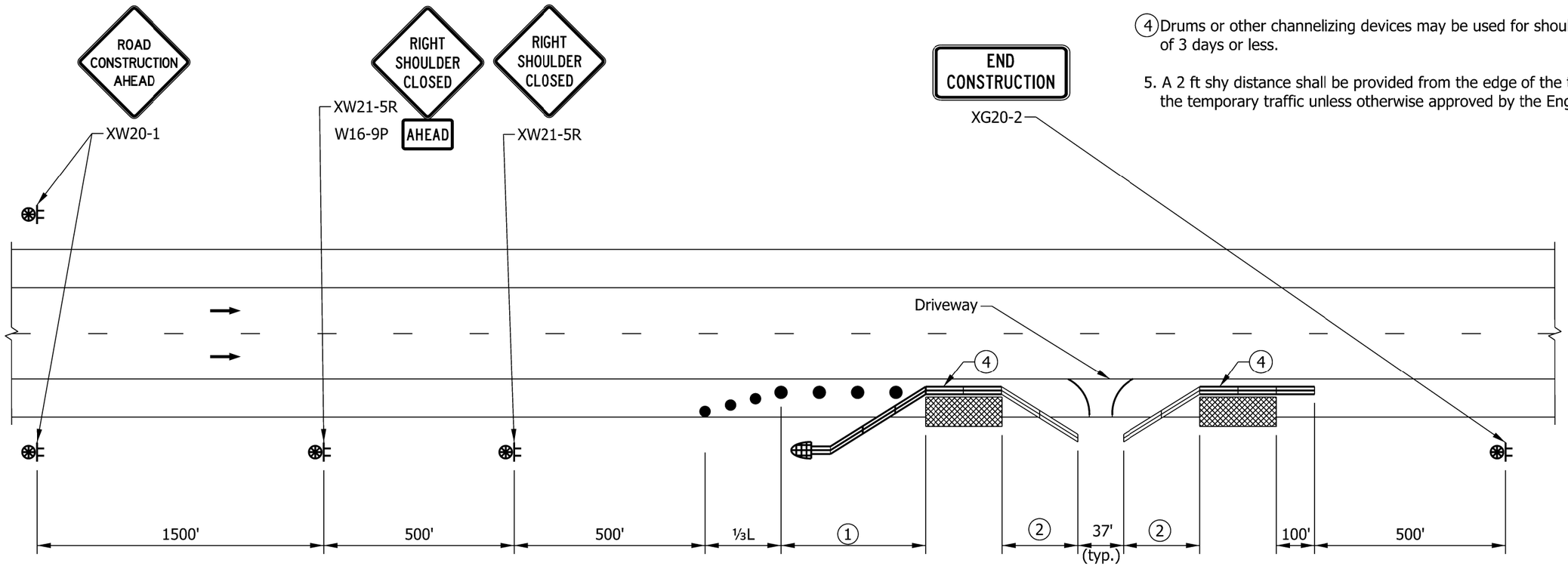

LEGEND

- Temporary Traffic Barrier
- Channelizing Device
- Construction Sign and Supports
- Construction Warning Light, Type A
- Direction of Traffic
- Crash Cushion
- Work Area

LONGITUDINAL BUFFER LENGTH	
Posted Speed Limit (mph)	Length (ft)
≤30	200
35	250
40	305
45	360
50	425
55	495
60	570

INDIANA DEPARTMENT OF TRANSPORTATION

SHOULDER CLOSURE ON
DIVIDED HIGHWAY WITH LOCAL ACCESS

SEPTEMBER 2022

STANDARD DRAWING NO. E 801-TCSC-05

DAVID H. BORUFF REGISTERED No. 60900348 STATE OF INDIANA PROFESSIONAL ENGINEER

05/17/22
DESIGN STANDARDS ENGINEER DATE

07/07/2022
CHIEF ENGINEER DATE

NOTES:

1. Longitudinal Buffer Length, see table.
2. Use temporary traffic barrier if required by designer.
3. See Standard Drawing series E 801-TCDV for distance, L.

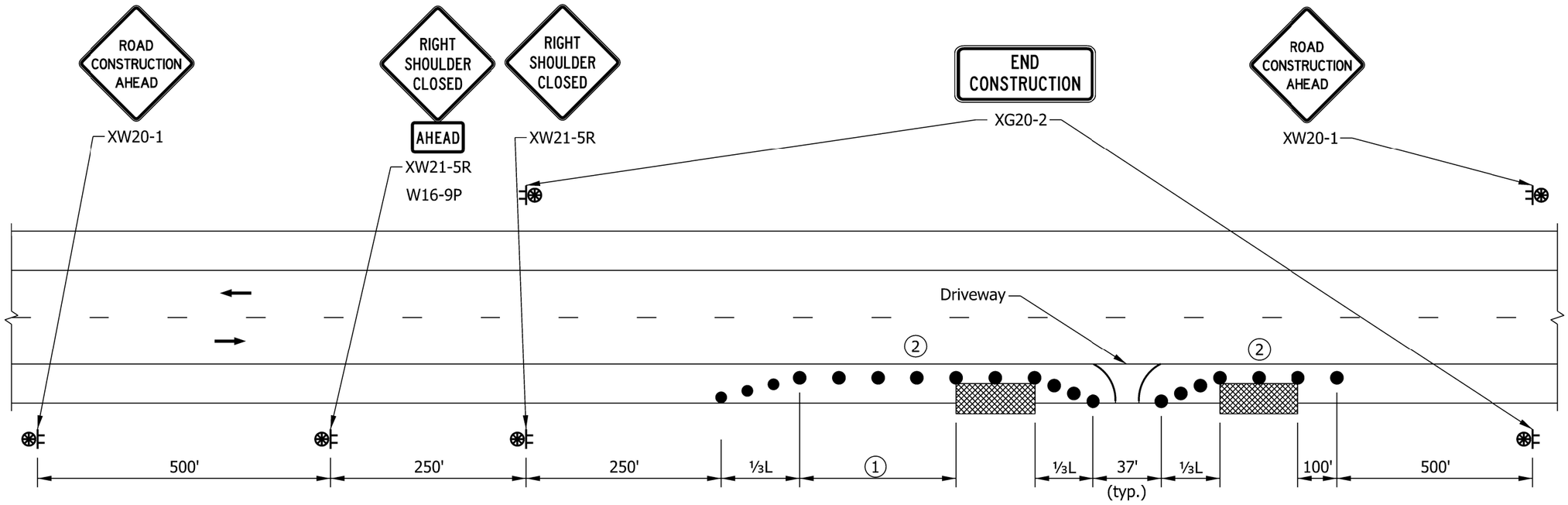

LEGEND

- Temporary Traffic Barrier
- Channelizing Device
- Construction Sign and Supports
- Construction Warning Light
- Direction of Traffic
- Crash Cushion
- Work Area

LONGITUDINAL BUFFER LENGTH	
Posted Speed Limit (mph)	Length (ft)
≤30	200
35	250
40	305
45	360
50	425
55	495

INDIANA DEPARTMENT OF TRANSPORTATION

SHOULDER CLOSURE ON TWO LANE HIGHWAY WITH LOCAL ACCESS

SEPTEMBER 2022

STANDARD DRAWING NO. E 801-TCSC-06

DAVID H. BORUFF REGISTERED No. 60900348 STATE OF INDIANA PROFESSIONAL ENGINEER

David H Boruff 05/17/22
DESIGN STANDARDS ENGINEER DATE

07/07/2022
CHIEF ENGINEER DATE

INDEX

SHEET NO.	SUBJECT
1	Index and General Notes
2	Traffic Control Signs
3	Traffic Control Signs
4	Traffic Control Sign Design Details
5	Traffic Control Sign Design Details
6	Traffic Control Sign Design Details
7	Temporary Panel Sign Post Installation
8	Temporary Panel Sign Post Selection and Connection Details

GENERAL NOTES:

1. The minimum vertical and horizontal clearances for construction signs shall be as shown on Standard Drawing E 801-TCDV-06.

2. See Standard Drawing E 801-TCDV-09 for U-Channel Steel Post Splice Detail.

INDIANA DEPARTMENT OF TRANSPORTATION

TRAFFIC CONTROL SIGNS
INDEX SHEET

SEPTEMBER 2026

STANDARD DRAWING NO. E 801-TCSN-01

DAVID H. BORUFF
REGISTERED
No.
60900348
STATE OF
INDIANA
PROFESSIONAL ENGINEER

3/3/26
DESIGN STANDARDS ENGINEER DATE

04/08/2026
CHIEF ENGINEER DATE

(2)

XW20-1
XW20-1-A

(1) (2)

XW21-8
XW21-8-A

(1) (3)

XW21-Y8b
XW21-Y8b-A

XW2-6b
XW2-6b-A
XW2-6b-B

XW2-6a
XW2-6a-A
XW2-6a-B

XW26-1

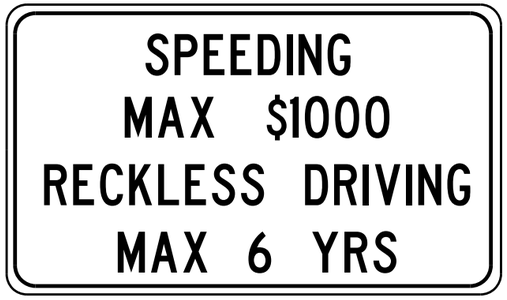

XW2-6
XW2-6-A

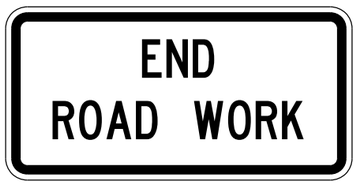

XG20-2

XW3-4S

(3)

XG20-1

NOTES:

(1) Sign shall be removed, covered, or turned to face away from the roadway during non-working hours.

(2) Sign may be ordered to read "500 FT" or "1000 FT" in place of the word "AHEAD". Such signs may be used in place of or in conjunction with the indicated sign.

(3) Shaded text indicates message content that must be varied to reflect site conditions.

INDIANA DEPARTMENT OF TRANSPORTATION

TRAFFIC CONTROL SIGNS

SEPTEMBER 2026

STANDARD DRAWING NO. E 801-TCSN-02

DAVID H. BORUFF
REGISTERED
No. 60900348
STATE OF INDIANA
PROFESSIONAL ENGINEER

David H Boruff 3/3/26
DESIGN STANDARDS ENGINEER DATE

04/08/2026
CHIEF ENGINEER DATE

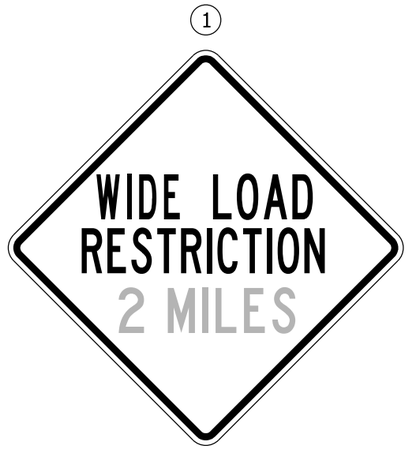

XW20-YWR(A)

XW20-YWR(B)

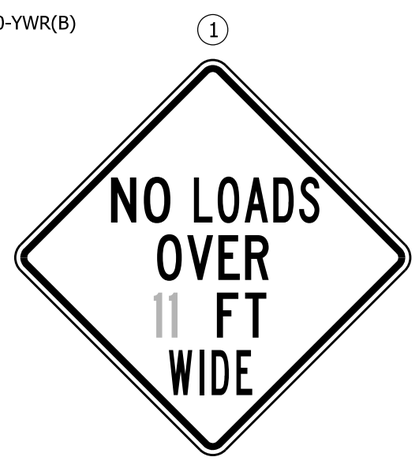

XW20-YWR(C)

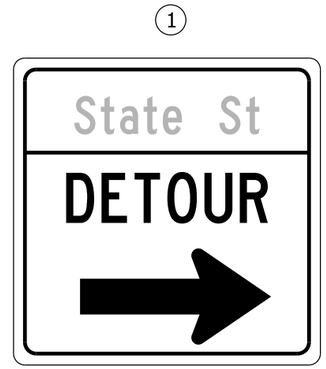

XM4-9d

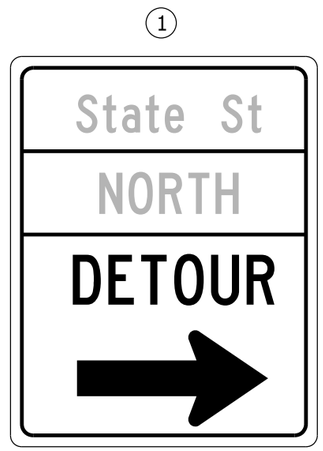

XM4-9e

XW9-7

E5-1

E5-2

E5-2a

NOTE:

1 Shaded text indicates message content that must be varied to reflect site conditions.

INDIANA DEPARTMENT OF TRANSPORTATION	
TRAFFIC CONTROL SIGNS SEPTEMBER 2026	
STANDARD DRAWING NO. E 801-TCSN-03	
DAVID H. BORUFF REGISTERED No. 60900348 STATE OF INDIANA PROFESSIONAL ENGINEER	3/3/26 DESIGN STANDARDS ENGINEER DATE 04/08/2026 CHIEF ENGINEER DATE

SIGN NUMBER	IMUTCD CODE	SIGN MESSAGE	POST DESIGN TYPE			SIGN SIZE	SIGN COLOR		BORDER WIDTH	MARGIN WIDTH	LETTER HEIGHT SERIES - LINE 1	LETTER HEIGHT SERIES - LINE 2	LETTER HEIGHT SERIES - LINE 3	WORD OR LINE	PCT.	CORNER RADIUS	NO. OF POSTS	
			4 X 4 WOOD	U-CHANNEL	SQUARE POST		BACKGROUND	COPY									1	2
R2-1	R2-1	Speed Limit ___	*	A	1	24 X 30	White	Black	See FHWA publication Standard Highway Signs for fabrication details								X	
R2-1-B	R2-1	Speed Limit ___	*	B	2	48 X 60	White	Black	See FHWA publication Standard Highway Signs for fabrication details									X
R3-2-A (R or L)	R3-2	(Movement Prohibition)	*	A	1	30 X 30	White	Black	See FHWA publication Standard Highway Signs for fabrication details								X	
R3-2-C (R or L)	R3-2	(Movement Prohibition)	*	B	2	48 X 48	White	Black	See FHWA publication Standard Highway Signs for fabrication details									X
R4-1	R4-1	Do Not Pass	*	A	1	24 X 30	White	Black	See FHWA publication Standard Highway Signs for fabrication details								X	
R4-1-B	R4-1	Do Not Pass	*	B	2	48 X 60	White	Black	See FHWA publication Standard Highway Signs for fabrication details									X
R5-1-A	R5-1	Do Not Enter	*	A	1	36 X 36	Red	White	See FHWA publication Standard Highway Signs for fabrication details									X
R5-1-B	R5-1	Do Not Enter	*	B	2	48 X 48	Red	White	See FHWA publication Standard Highway Signs for fabrication details									X
R6-1 (R or L)	R6-1	One Way (Inside White Arrow)	*	A	1	36 X 12	White	Black	See FHWA publication Standard Highway Signs for fabrication details								X	
R6-2-A (R or L)	R6-2	One Way (Above White Arrow)	*	A	1	24 X 30	Black & White	Black	See FHWA publication Standard Highway Signs for fabrication details								X	
R9-8	R9-8	Pedestrian Crosswalk	*	A	1	36 X 18	White	Black	See FHWA publication Standard Highway Signs for fabrication details								X	
R9-9	R9-9	Sidewalk Closed	*	A	1	24 X 12	White	Black	See FHWA publication Standard Highway Signs for fabrication details								X	
R9-10	R9-10	Sidewalk Closed Use Other Side	*	A	1	24 X 12	White	Black	See FHWA publication Standard Highway Signs for fabrication details								X	
R9-11	R9-11	Sidewalk Closed Ahead Cross Here	*	A	1	24 X 18	White	Black	See FHWA publication Standard Highway Signs for fabrication details								X	
R9-11a	R9-11a	Sidewalk Closed Cross Here	*	A	1	24 X 12	White	Black	See FHWA publication Standard Highway Signs for fabrication details								X	
R9-12	R9-12	Bike Lane Closed	*	A	1	24 X 12	White	Black	See FHWA publication Standard Highway Signs for fabrication details								X	
R11-2	R11-2	Road Closed	*	B	1	48 X 30	White	Black	See FHWA publication Standard Highway Signs for fabrication details									X
R11-3	R11-3	Road Closed - Local Traffic Only	*	B	2	60 X 30	White	Black	See FHWA publication Standard Highway Signs for fabrication details									X
R11-4	R11-4	Road Closed to Thru Traffic	*	B	2	60 X 30	White	Black	See FHWA publication Standard Highway Signs for fabrication details									X
R12-1	R12-1	Weight Limit ___ Tons	*	A	1	24 X 30	White	Black	See FHWA publication Standard Highway Signs for fabrication details								X	
R12-1-A	R12-1	Weight Limit ___ Tons	-	B	2	36 X 48	White	Black	See FHWA publication Standard Highway Signs for fabrication details									X
S4-4	S4-4	When Flashing Plaque	*	-	-	48 X 20	White	Black	See FHWA publication Standard Highway Signs for fabrication details								-	-
XW1-1-A (R or L)	W1-1	(Turn Symbol)	*	A	1	36 X 36	Orange	Black	See FHWA publication Standard Highway Signs for fabrication details									X
XW1-1-B (R or L)	W1-1	(Turn Symbol)	*	B	2	48 X 48	Orange	Black	See FHWA publication Standard Highway Signs for fabrication details									X
XW1-2-A (R or L)	W1-2	(Curve Symbol)	*	A	1	36 X 36	Orange	Black	See FHWA publication Standard Highway Signs for fabrication details									X
XW1-2-B (R or L)	W1-2	(Curve Symbol)	*	B	2	48 X 48	Orange	Black	See FHWA publication Standard Highway Signs for fabrication details									X
XW1-3-A (R or L)	W1-3	(Reverse Turn Symbol)	*	A	1	36 X 36	Orange	Black	See FHWA publication Standard Highway Signs for fabrication details									X
XW1-3-B (R or L)	W1-3	(Reverse Turn Symbol)	*	B	2	48 X 48	Orange	Black	See FHWA publication Standard Highway Signs for fabrication details									X
XW1-4-A (R or L)	W1-4	(Reverse Curve Symbol)	*	A	1	36 X 36	Orange	Black	See FHWA publication Standard Highway Signs for fabrication details									X
XW1-4-B (R or L)	W1-4	(Reverse Curve Symbol)	*	B	2	48 X 48	Orange	Black	See FHWA publication Standard Highway Signs for fabrication details									X
XW1-6	W1-6	(Single Headed Arrow)	*	B	1	48 X 24	Orange	Black	See FHWA publication Standard Highway Signs for fabrication details									X
XW1-6-A	W1-6	(Single Headed Arrow)	*	B	2	60 X 30	Orange	Black	See FHWA publication Standard Highway Signs for fabrication details									X
XW2-6	XW2-6	Worksite Added Penalty	*	B	2	60 X 36	Orange	Black	7/8	5/8	5 - Series C	5 - Series C	5 - Series C	5 - Series C		2 1/4		X
XW2-6-A	XW2-6	Worksite Added Penalty	*	B	2	78 X 42	Orange	Black	7/8	5/8	6 - Series D	6 - Series D	6 - Series D	6 - Series D		2 1/4		X
XW2-6a	XW2-6a	Speeding Max $1000	*	A	1	30 X 30	Orange	Black	3/4	1/2	4 - Series C	4 - Series C				1 7/8	X	
XW2-6a-A	XW2-6a	Speeding Max $1000	*	A	1	36 X 36	Orange	Black	7/8	5/8	5 - Series C	5 - Series C				2 1/4		X
XW2-6a-B	XW2-6a	Speeding Max $1000	*	B	2	48 X 48	Orange	Black	1 1/4	3/4	6 - Series D	6 - Series D				3		X
XW2-6b	XW2-6b	Reckless Driving Max 6 Yrs	*	A	1	30 X 30	Orange	Black	3/4	1/2	4 - Series C	4 - Series C				1 7/8	X	
XW2-6b-A	XW2-6b	Reckless Driving Max 6 Yrs	*	A	1	36 X 36	Orange	Black	7/8	5/8	5 - Series C	5 - Series C				2 1/4		X
XW2-6b-B	XW2-6b	Reckless Driving Max 6 Yrs	*	B	2	48 X 48	Orange	Black	1 1/4	3/4	6 - Series D	6 - Series D				3		X

(1) (1)

*Wood post allowed.

NOTES:

(1) Spacing between letters of this word or line shall be reduced by this percentage as shown in the FHWA document, *Standard Highway Signs.*

2. All dimensions are in inches.

3. The minimum depth for wood or steel posts shall be 4 ft.

INDIANA DEPARTMENT OF TRANSPORTATION

TRAFFIC CONTROL SIGN DESIGN DETAILS

SEPTEMBER 2026

STANDARD DRAWING NO. E 801-TCSN-04

DAVID H. BORUFF REGISTERED No. 60900348 STATE OF INDIANA PROFESSIONAL ENGINEER

David H Boruff 3/3/26

DESIGN STANDARDS ENGINEER DATE

04/08/2026

CHIEF ENGINEER DATE

SIGN NUMBER	IMUTCD CODE	SIGN MESSAGE	POST DESIGN TYPE			SIGN SIZE	SIGN COLOR		BORDER WIDTH	MARGIN WIDTH	LETTER HEIGHT SERIES - LINE 1	LETTER HEIGHT SERIES - LINE 2	LETTER HEIGHT SERIES - LINE 3	WORD OR LINE	PCT.	CORNER RADIUS	NO. OF POSTS	
			4 X 4 WOOD	U-CHANNEL	SQUARE POST		BACKGROUND	COPY									1	2
XW3-4S	-	Overhead Sign Installation	*	B	2	60 x 24	Orange	Black	1/2	3/8	6 - Series C	6 - Series C				1 1/2		X
XW3-5-A	W3-5	(Reduced Speed Limit Ahead)	*	A	1	36 X 36	Orange	Black	See FHWA publication Standard Highway Signs for fabrication details									X
XW3-5-B	W3-5	(Reduced Speed Limit Ahead)	*	B	2	48 X 48	Orange	Black	See FHWA publication Standard Highway Signs for fabrication details									X
XW3-5a-A	W3-5	(Reduced Speed Limit Ahead)	*	A	1	36 X 36	Orange	Black	See FHWA publication Standard Highway Signs for fabrication details									X
XW3-5a-B	W3-5	(Reduced Speed Limit Ahead)	*	B	2	48 X 48	Orange	Black	See FHWA publication Standard Highway Signs for fabrication details									X
XW4-2 (R or L)	W4-2	(Lane Ends Merge ____ Symbol)	*	A	1	36 X 36	Orange	Black	See FHWA publication Standard Highway Signs for fabrication details									X
XW4-2-A (R or L)	W4-2	(Lane Ends Merge ____ Symbol)	*	B	2	48 X 48	Orange	Black	See FHWA publication Standard Highway Signs for fabrication details									X
XW6-2a-A	W6-2	(Divided Highway Ends Symbol)	*	A	1	36 X 36	Orange	Black	See FHWA publication Standard Highway Signs for fabrication details									X
WX6-2a-B	W6-2	(Divided Highway Ends Symbol)	*	B	2	48 X 48	Orange	Black	See FHWA publication Standard Highway Signs for fabrication details									X
XW6-3-B	W6-3	(Two Way Traffic Symbol)	*	B	2	48 X 48	Orange	Black	See FHWA publication Standard Highway Signs for fabrication details									X
XW8-1-A	W8-1	Bump	*	A	1	36 X 36	Orange	Black	See FHWA publication Standard Highway Signs for fabrication details									X
XW8-1-B	W8-1	Bump	*	B	2	48 X 48	Orange	Black	See FHWA publication Standard Highway Signs for fabrication details									X
XW8-2-A	W8-2	Dip	*	A	1	36 X 36	Orange	Black	See FHWA publication Standard Highway Signs for fabrication details									X
XW8-2-B	W8-2	Dip	*	B	2	48 X 48	Orange	Black	See FHWA publication Standard Highway Signs for fabrication details									X
XW8-3-A	W8-3	Pavement Ends	*	A	1	36 X 36	Orange	Black	See FHWA publication Standard Highway Signs for fabrication details									X
XW8-4-A	W8-4	Soft Shoulder	*	A	1	36 X 36	Orange	Black	See FHWA publication Standard Highway Signs for fabrication details									X
XW8-4-B	W8-4	Soft Shoulder	*	B	2	48 X 48	Orange	Black	See FHWA publication Standard Highway Signs for fabrication details									X
XW8-6-A	W8-6	Truck Crossing	*	A	1	36 X 36	Orange	Black	See FHWA publication Standard Highway Signs for fabrication details									X
XW8-6-B	W8-6	Truck Crossing	*	B	2	48 X 48	Orange	Black	See FHWA publication Standard Highway Signs for fabrication details									X
XW9-1-A (R or L)	W9-1	____ Lane Ends	*	A	1	36 X 36	Orange	Black	See FHWA publication Standard Highway Signs for fabrication details									X
XW9-1-B (R or L)	W9-1	____ Lane Ends	*	B	2	48 X 48	Orange	Black	See FHWA publication Standard Highway Signs for fabrication details									X
XW9-2-B (R or L)	W9-2	Lane Ends Merge ____	*	B	2	48 X 48	Orange	Black	See FHWA publication Standard Highway Signs for fabrication details									X
XW9-7	W9-7	Right Lane for Exit Only	6 X 6	-	-	132 X 72	Orange	Black	See FHWA publication Standard Highway Signs for fabrication details									X
XW12-1-C	W12-1	Double Arrow	*	B	2	48 X 48	Orange	Black	See FHWA publication Standard Highway Signs for fabrication details									X
XW13-1-A	W13-1	Advisory Speed Plaque	*	A	1	36 X 36	Orange	Black	See FHWA publication Standard Highway Signs for fabrication details								-	-
XW20-1-A	W20-1	Road Work Ahead	*	A	1	36 X 36	Orange	Black	See FHWA publication Standard Highway Signs for fabrication details									X
XW20-1	W20-1	Road Work Ahead	*	B	2	48 X 48	Orange	Black	See FHWA publication Standard Highway Signs for fabrication details									X
XW20-2	W20-2	Detour Ahead	*	B	2	48 X 48	Orange	Black	See FHWA publication Standard Highway Signs for fabrication details									X
XW20-3	W20-3	Road Closed Ahead	*	B	2	48 X 48	Orange	Black	See FHWA publication Standard Highway Signs for fabrication details									X
XW20-4	W20-4	One Lane Road Ahead	*	B	2	48 X 48	Orange	Black	See FHWA publication Standard Highway Signs for fabrication details									X
XW20-5 (R, C, or L)	W20-5	_____ Lane Closed Ahead	*	B	2	48 X 48	Orange	Black	See FHWA publication Standard Highway Signs for fabrication details									X
XW20-7-A	W20-7	Flagger Symbol	*	B	2	48 X 48	Orange	Black	See FHWA publication Standard Highway Signs for fabrication details									X
XW20-YWR(A)	-	Wide Load Restriction ___ Miles	*	B	2	48 X 48	Orange	Black	1 1/4	3/4	6 - Series D	6 - Series D	6 - Series D			3		X
XW20-YWR(B)	-	Wide Load Over __ ft Must Exit	*	B	2	48 X 48	Orange	Black	1 1/4	3/4	6 - Series C	6 - Series C	6 - Series C	6 - Series C		3		X
XW20-YWR(C)	-	No Loads Over ___ ft Wide	*	B	2	48 X 48	Orange	Black	1 1/4	3/4	6 - Series D	6 - Series D	6 - Series D	6 - Series D		3		X

*Wood post allowed.

(1) (1)

NOTES:

(1) Spacing between letters of this word or line shall be reduced by this percentage as shown in the FHWA document, *Standard Highway Signs.*

2. All dimensions are in inches.

3. The minimum depth for wood or steel posts shall be 4 ft.

INDIANA DEPARTMENT OF TRANSPORTATION

TRAFFIC CONTROL SIGN DESIGN DETAILS

SEPTEMBER 2026

STANDARD DRAWING NO. E 801-TCSN-05

DAVID H. BORUFF REGISTERED No. 60900348 STATE OF INDIANA PROFESSIONAL ENGINEER

DESIGN STANDARDS ENGINEER — DATE 3/3/26

CHIEF ENGINEER — DATE 04/08/2026

SIGN NUMBER	IMUTCD CODE	SIGN MESSAGE	POST DESIGN TYPE			SIGN SIZE	SIGN COLOR BACKGROUND	COPY	BORDER WIDTH	MARGIN WIDTH	LETTER HEIGHT SERIES - LINE 1	LETTER HEIGHT SERIES - LINE 2	LETTER HEIGHT SERIES - LINE 3	WORD OR LINE (1)	PCT. (1)	CORNER RADIUS	NO. OF POSTS	
			4 X 4 WOOD	U-CHANNEL	SQUARE POST												1	2
XW21-1-A	W21-1	Workers Symbol	*	A	1	36 X 36	Orange	Black	See FHWA publication Standard Highway Signs for fabrication details									X
XW21-2	W21-2	Fresh Oil	*	A	1	30 X 30	Orange	Black	See FHWA publication Standard Highway Signs for fabrication details								X	
XW21-2-A	W21-2	Fresh Oil	*	A	1	36 X 36	Orange	Black	See FHWA publication Standard Highway Signs for fabrication details									X
XW21-3-A	W21-3	Road Machinery Ahead	*	B	2	48 X 48	Orange	Black	See FHWA publication Standard Highway Signs for fabrication details									X
XW21-5-A	W21-5	Shoulder Work	*	A	1	36 X 36	Orange	Black	See FHWA publication Standard Highway Signs for fabrication details									X
XW21-6-A	W21-6	Survey Crew	*	A	1	36 X 36	Orange	Black	See FHWA publication Standard Highway Signs for fabrication details									X
XW21-7	W21-7	Utility Work Ahead	*	A	1	36 X 36	Orange	Black	See FHWA publication Standard Highway Signs for fabrication details									X
XW21-7-A	W21-7	Utility Work Ahead	*	B	2	48 X 48	Orange	Black	See FHWA publication Standard Highway Signs for fabrication details									X
XW21-Y8b	-	Mowing Next X Miles	*	A	1	36 X 36	Orange	Black	3/4	1/2	6 - Series C	6 - Series C	6 - Series C			2 1/4		X
XW21-Y8b-A	-	Mowing Next X Miles	*	B	2	48 X 48	Orange	Black	1 1/4	3/4	8 - Series C	8 - Series C	8 - Series C			3		X
XW21-8	W21-8	Mowing Ahead	*	A	1	36 X 36	Orange	Black	See FHWA publication Standard Highway Signs for fabrication details									X
XW21-8-A	W21-8	Mowing Ahead	*	B	2	48 X 48	Orange	Black	See FHWA publication Standard Highway Signs for fabrication details									X
XW26-1	W26-1	Watch for Stopped Traffic	*	B	2	48 X 48	Orange	Black	See FHWA publication Standard Highway Signs for fabrication details									X
XG20-1	G20-1	Road Work Next __ Miles	*	B	1	48 X 24	Orange	Black	See FHWA publication Standard Highway Signs for fabrication details									X
XG20-2	G20-2	End Road Work	*	B	1	48 X 24	Orange	Black	See FHWA publication Standard Highway Signs for fabrication details									X
XG20-4	G20-4	Pilot Car Follow Me	-	-	-	36 X 18	Orange	Black	See FHWA publication Standard Highway Signs for fabrication details								-	-
XG20-5	-	(Route Number or Lane Closed On or After ____)	*	B	2	60 X 36	Orange	Black	3/4	1/2	6 - Series C	6 - Series C	6 - Series C			2 1/4		X
XG20-5P	XG20-5P	Worksite Plaque	-	-	-	48 X 16	Orange	Black	1/2	3/8	8 - Series C					1 1/2	-	-
XW20-6	-	Lane Restrictions On or After _____	*	B	2	60 X 36	Orange	Black	3/4	1/2	5 - Series C	5 - Series C	4 - Series C			1 7/8		X
XW20-6A	-	Lane Restrictions On or After _____	*	B	2	72 X 36	Orange	Black	7/8	5/8	6 - Series C	6 - Series C	5 - Series C			2 1/4		X
XM4-9 (R or L)	M4-9	Detour (Above Black Arrow)	*	A	1	30 X 24	Orange	Black	See FHWA publication Standard Highway Signs for fabrication details								X	
XM4-9-B (R or L)	M4-9	Detour (Above Black Arrow)	*	B	2	48 X 36	Orange	Black	See FHWA publication Standard Highway Signs for fabrication details									X
M4-Y9	-	Temporary Path with Arrow	*	A	1	24 X 12	Orange	Black	5/8	3/8	3 - Series C	3 - Series C (Arrow is 6x4)		2		1 1/2	X	
XM4-Y9d	-	_____ St / Detour Arrow	*	B	2	L X 36	Orange	Black	1/2	3/8	4 - Series C	6 - Series C		1	30	1 1/2	X (L ≤ 42)	X (L > 42)
XM4-Y9e	-	_____ St / Direction / Detour Arrow	*	B	2	L X 48	Orange	Black	1/2	3/8	4 - Series C	6 -Series C	6 -Series C	1	30	1 1/2	X (L ≤ 36)	X (L > 36)
XM4-10 (R or L)	M4-10	Detour (Inside Orange Arrow)	*	B	1	48 X 18	Black & Orange	Black	See FHWA publication Standard Highway Signs for fabrication details									X
E5-2a	-	Exit Closed	*	B	2	48 X 36	Orange	Black	See FHWA publication Standard Highway Signs for fabrication details									X
E5-2	-	Exit Open	*	B	2	48 X 36	Orange	Black	See FHWA publication Standard Highway Signs for fabrication details									X
E5-1c	E5-Y1c	Exit (Above Arrow)	6x6	B	2	48 X 84	Green	White	1 1/2	0	12 - Series E	18 - Series E	(Arrow is 10-13.4)			6	X	

*Wood post allowed.

NOTES:

(1) Spacing between letters of this word or line shall be reduced by this percentage as shown in the FHWA document, *Standard Highway Signs.*

2. All dimensions are in inches.

3. The minimum depth for wood or steel posts shall be 4 ft.

INDIANA DEPARTMENT OF TRANSPORTATION

TRAFFIC CONTROL SIGN DESIGN DETAILS

SEPTEMBER 2026

STANDARD DRAWING NO. E 801-TCSN-06

DAVID H. BORUFF REGISTERED No. 60900348 STATE OF INDIANA PROFESSIONAL ENGINEER

David H Boruff 3/3/26

DESIGN STANDARDS ENGINEER DATE

04/08/2026

CHIEF ENGINEER DATE

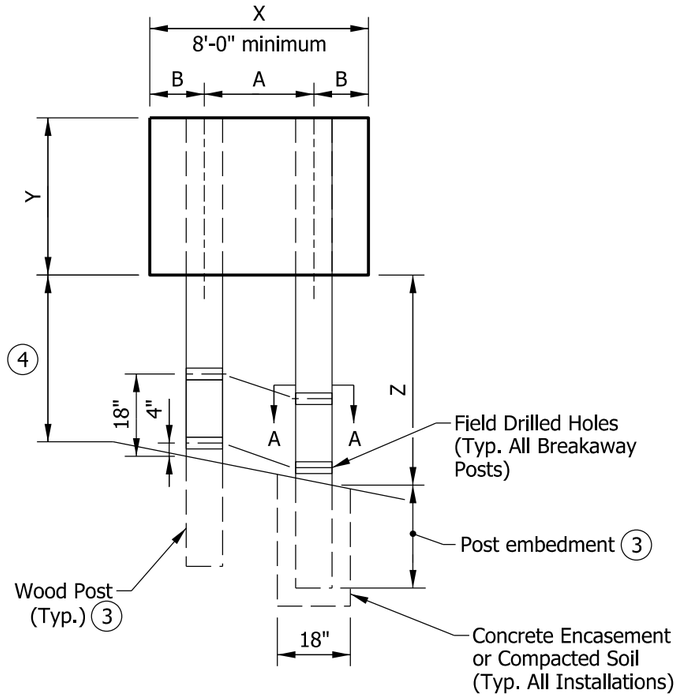

2-POST INSTALLATION

A = (X-2B)

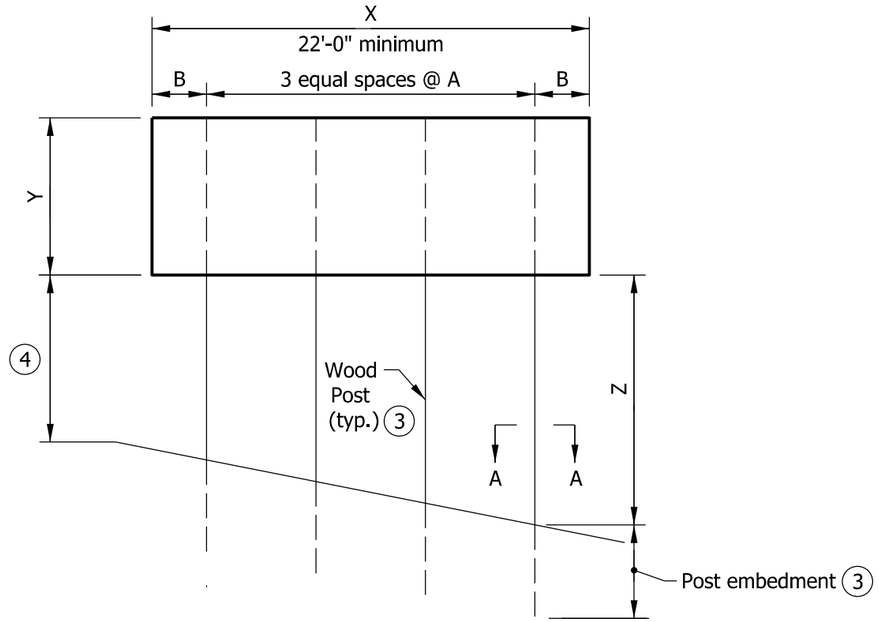

4-POST INSTALLATION

A = (X-2B)/3

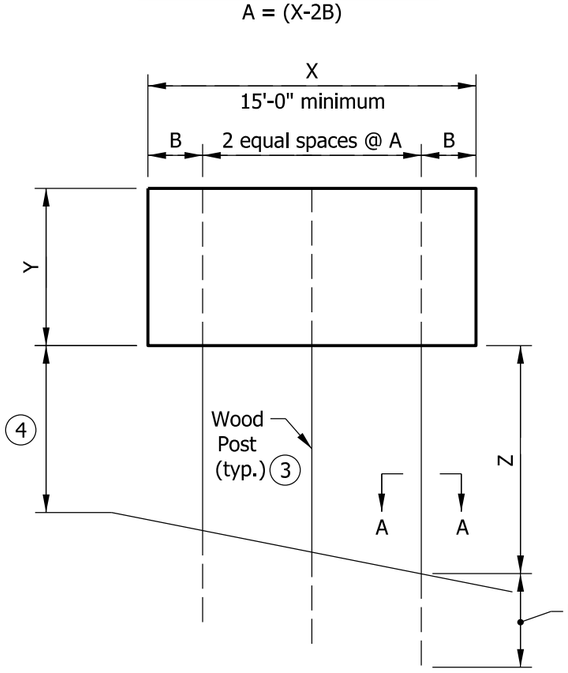

3-POST INSTALLATION

A = (X-2B)/2

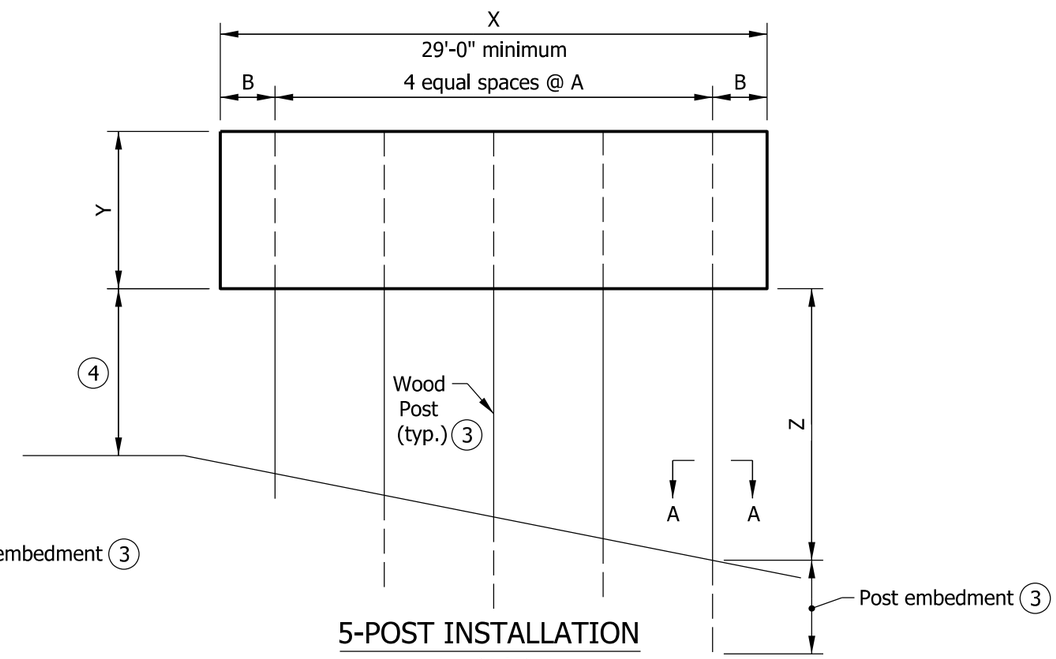

5-POST INSTALLATION

A = (X-2B)/4

NOTES:

1. The minimum post spacing (A) shall be 7'-0" and the maximum spacing shall be 15'-0". The minimum overhang width (B) shall be 6 inches and the maximum width shall be A/2.
2. X and Y dimensions shall be in increments of 6 inches. The Z dimension shall be rounded up to the nearest 6 inch increment.

(3) For post selection and post embedment depth, see table on Standard Drawing E 801-TCSN-08.

(4) The minimum vertical clearance shall be as shown on Standard Drawing E 801-TCDV-06.

(5) Field drilled holes through post shall be parallel to sign face.

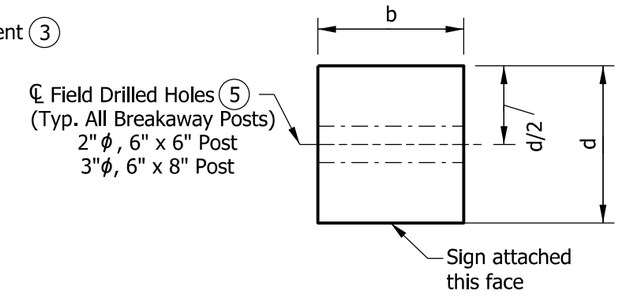

SECTION A-A

INDIANA DEPARTMENT OF TRANSPORTATION

TEMPORARY PANEL SIGN
POST INSTALLATION

SEPTEMBER 2026

STANDARD DRAWING NO. E 801-TCSN-07

DAVID H. BORUFF
REGISTERED
No. 60900348
STATE OF INDIANA
PROFESSIONAL ENGINEER

David H Boruff 3/3/26
DESIGN STANDARDS ENGINEER DATE

04/08/2026
CHIEF ENGINEER DATE

TEMPORARY PANEL SIGN WOOD POST SELECTION TABLE						
Post Description	Nominal Post Size (b x d)	(X * Y * Z) in ft^3 (Maximum) Number of Posts				Post Embedment
		2	3	4	5	ft
Breakaway Post	6" x 6"	363	681	1000	1318	5
	6" x 8"	479	899	1319	1739	6
Non-Breakaway Post (5)	6" x 6"	389	730	1071	1412	5
	6" x 8"	615	1154	1693	2232	6
	8" x 8"	755	1416	2078	2739	7
	8" x 10"	1007	1941	2848	3754	8
	10" x 10"	1279	2399	3519	4639	9

NOTES:

1. Post material shall be dense southern pine select natural.
2. See Standard Drawing E 801-TCSN-07 for X, Y and Z dimensions.
3. The table is valid for dimensions within the following range:
   Sign Width (X) between 8'-0" and 45'-0"
   Sign Height (Y) between 4'-0" and 20'-0"
   Clear Height (Z) between 7'-0" and 15'-0"

(4) The length of the connector shall be equal to the sign height Y.

(5) Non-breakaway posts shall be placed outside the clearzone or behind barrier or guardrail. The edge of the panel sign adjacent to traffic shall be at least 6 feet from the face of the barrier or guardrail.

(6) At exterior posts, the Angle Connector shall be installed on the outside face of the post.

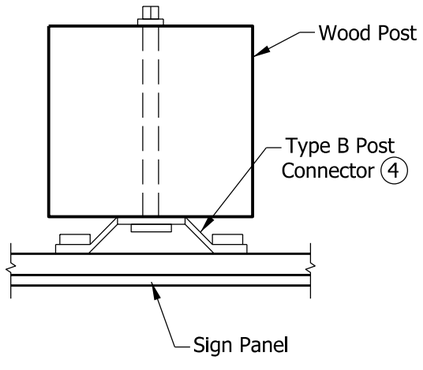

TYPE B POST CONNECTION

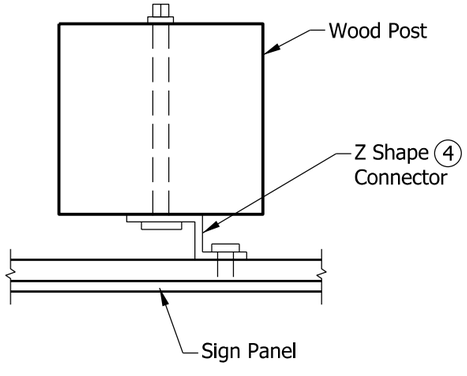

Z SHAPE CONNECTION

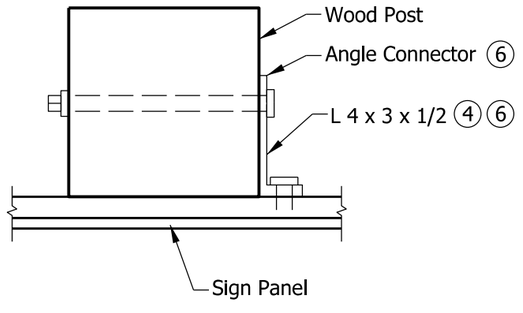

ANGLE SHAPE CONNECTION

INDIANA DEPARTMENT OF TRANSPORTATION

TEMPORARY PANEL SIGN
POST SELECTION AND
CONNECTION DETAILS
SEPTEMBER 2026

STANDARD DRAWING NO. E 801-TCSN-08

DAVID H. BORUFF REGISTERED No. 60900348 STATE OF INDIANA PROFESSIONAL ENGINEER

David H Boruff 3/3/26
DESIGN STANDARDS ENGINEER DATE

04/08/2026
CHIEF ENGINEER DATE

INDEX	
SHEET NO.	SUBJECT
1	Temporary Closures, Index and General Notes
2	Temporary Closures of a Divided Highway
3	Temporary Closure of a Freeway or Expressway with Detour
4	Temporary Closures for Project Following Completion of Grading Contract

INDIANA DEPARTMENT OF TRANSPORTATION

TEMPORARY CLOSURES,
INDEX AND GENERAL NOTES

SEPTEMBER 2022

STANDARD DRAWING NO. E 801-TCTC-01

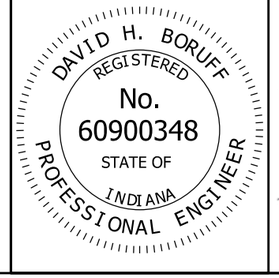

06/08/22
DESIGN STANDARDS ENGINEER DATE

06/27/2022
CHIEF ENGINEER DATE

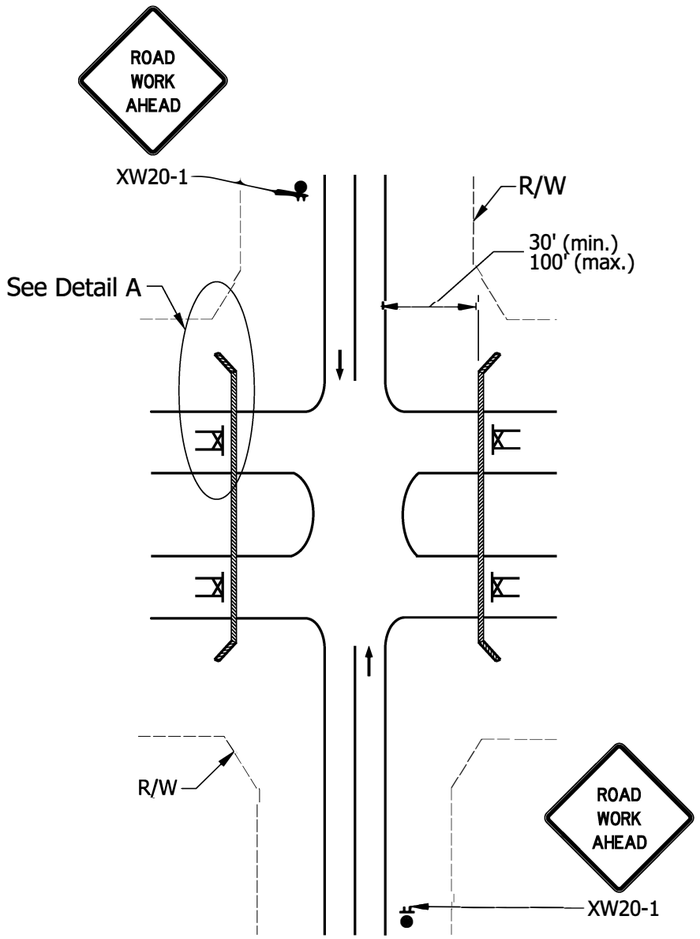

TEMPORARY CLOSURE OF A DIVIDED HIGHWAY

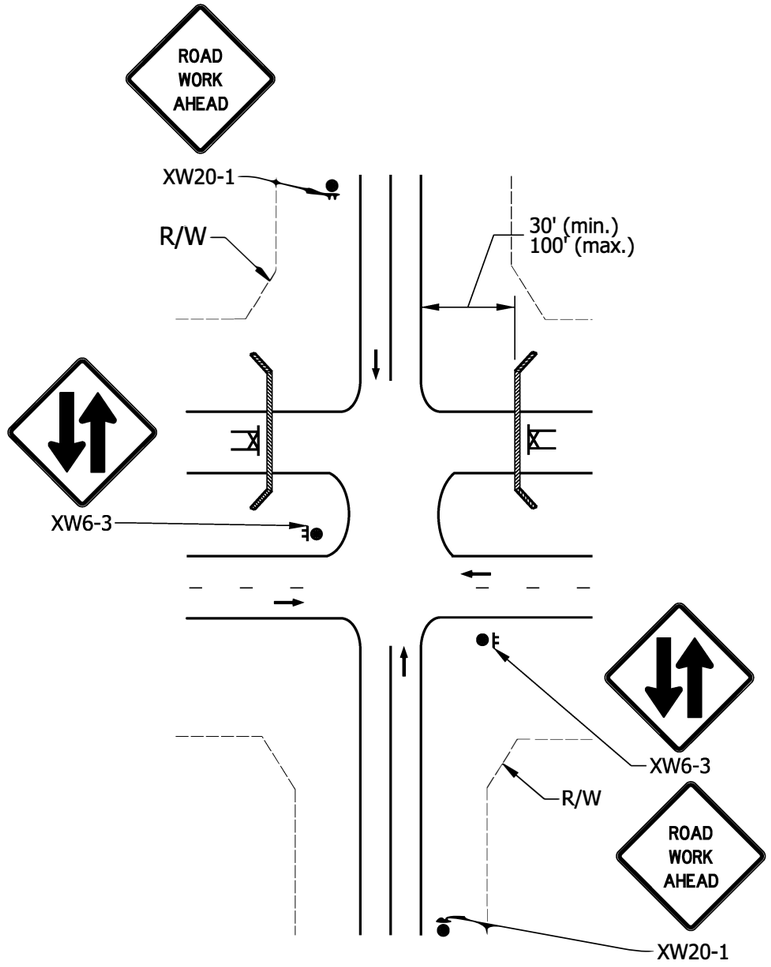

TEMPORARY CLOSURE OF ONE SIDE OF A DIVIDED HIGHWAY

NOTES:

1. Type III-A barricades shall be used to R/W, or to the point where no longer traversable.
2. See Standard Drawing series E 801-TCDV for road closure sign assembly and Type III barricade details.

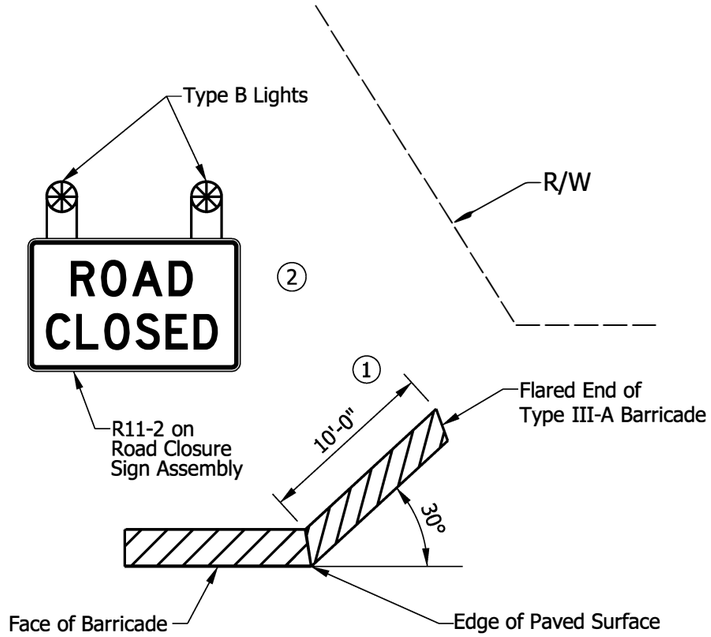

DETAIL A

LEGEND

- Construction Sign and Supports
- Road Closure Sign Assembly
- Type III-A Barricades
- Direction of Traffic
- Construction Warning Light

INDIANA DEPARTMENT OF TRANSPORTATION

TEMPORARY CLOSURES OF A DIVIDED HIGHWAY

SEPTEMBER 2026

STANDARD DRAWING NO. E 801-TCTC-02

DAVID H. BORUFF REGISTERED No. 60900348 STATE OF INDIANA PROFESSIONAL ENGINEER

David H Boruff 4/28/2026
DESIGN STANDARDS ENGINEER DATE

04/29/2026
CHIEF ENGINEER DATE

NOTES:

1. See Standard Drawing E 801-TCDV-03 for merge distance, L. The value of L on freeways shall be based on 70 mph.
2. Channelizing devices shall not encroach into travel lane.
3. (3) Yellow line, not required for closures ≤ 3 days.
4. (4) Channelizing device spacing in taper shall be 20 ft
5. See Standard Drawing E 801-TCLC-01 for advance signing requirements for interstate applications.

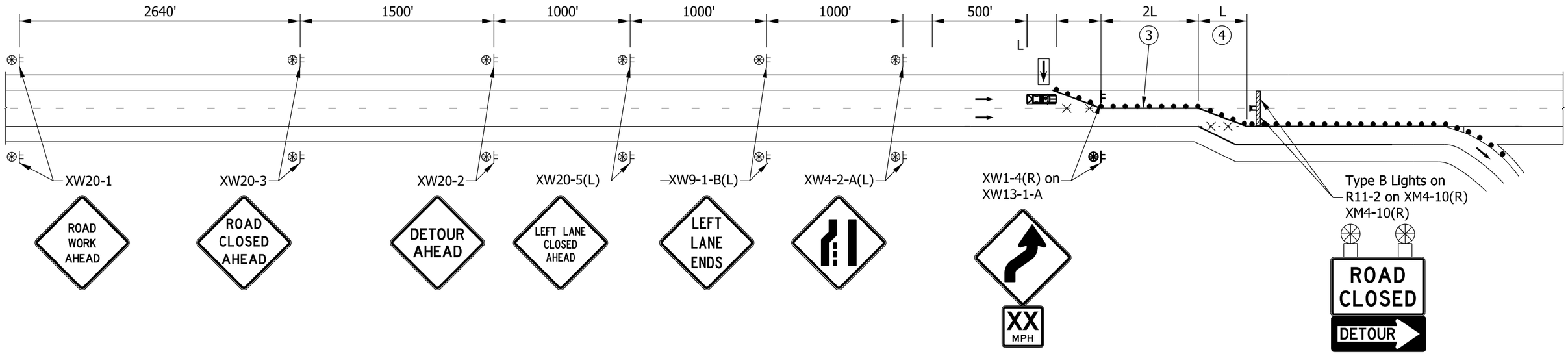

LEGEND

- Flashing Arrow Sign
- Channelizing Device
- Construction Sign and Supports
- Removal of Pavement Markings and Prismatic Reflectors
- Type III-A Barricades
- Direction of Traffic
- Construction Warning Light
- Road Closure Sign Assembly
- Truck Mounted Attenuator

INDIANA DEPARTMENT OF TRANSPORTATION

TEMPORARY CLOSURE OF FREEWAY OR EXPRESSWAY WITH DETOUR

SEPTEMBER 2026

STANDARD DRAWING NO. E 801-TCTC-03

DAVID H. BORUFF REGISTERED No. 60900348 STATE OF INDIANA PROFESSIONAL ENGINEER

DESIGN STANDARDS ENGINEER — DATE 4/28/2026

CHIEF ENGINEER — DATE 04/29/2026

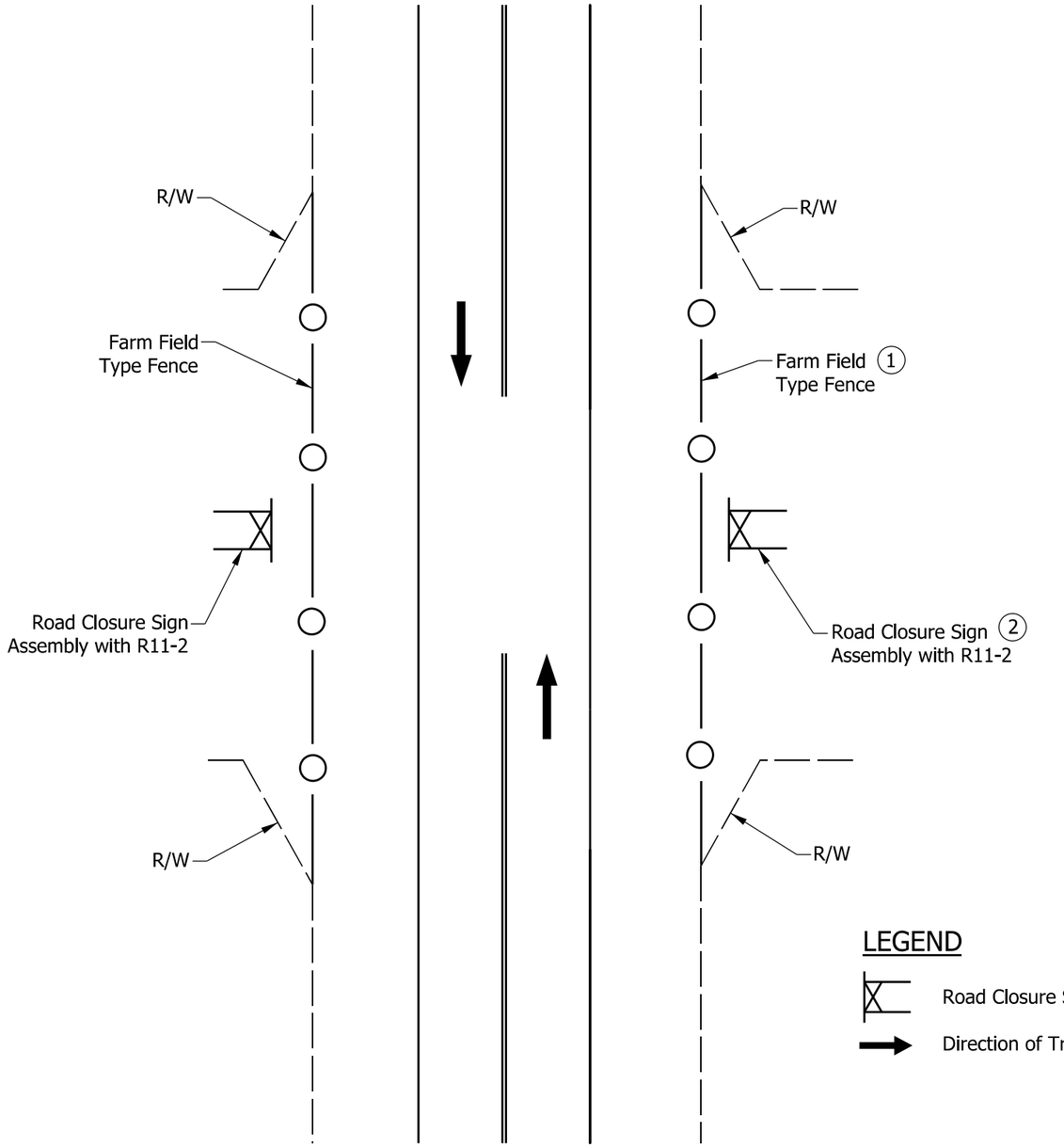

LEGEND

Road Closure Sign Assembly

Direction of Traffic

NOTES:

(1) See Standard Drawing series E 603-FFTF for farm field type fence detail.

(2) See Standard Drawing series E 801-TCDV for Type III barricade and road closure sign assembly detail.

INDIANA DEPARTMENT OF TRANSPORTATION

TEMPORARY CLOSURES FOR PROJECT FOLLOWING COMPLETION OF GRADING CONTRACT

SEPTEMBER 2022

STANDARD DRAWING NO. E 801-TCTC-04

DAVID H. BORUFF REGISTERED No. 60900348 STATE OF INDIANA PROFESSIONAL ENGINEER

David H Boruff 06/08/22

DESIGN STANDARDS ENGINEER DATE

06/27/2022

CHIEF ENGINEER DATE

INDEX	
SHEET NO.	SUBJECT - TEMPORARY PEDESTRIAN ACCESS ROUTES
1	Index and General Notes
2	Pedestrian Detour Corner Closure
3	Pedestrian Detour Crosswalk Closure
4	Pedestrian Detour Full Block Closure
5	Pedestrian Detour Multi-Block Closure
6	Pedestrian Detour Midblock Closure
7	Pedestrian Detour Midblock Closure with Temporary Crossing
8	Pedestrian Diversion, Streetside at Intersection
9	Pedestrian Diversion, Right-of-way Side
10	Temporary Curb Ramps
11	Temporary Pedestrian Channelizers

GENERAL NOTES:

1. Signs, railings, or other objects may protrude a maximum of 4 inches into the walkway clear area when located 27 inches minimum above the walkway surface.

2. Any construction signs placed in the sidewalk shall include supports with detectable edging in accordance with Part 6 of the MUTCD.

3. Audible information devices, when specified, shall be a minimum of 15 ft apart and may be mounted on channelizing devices, pedestrian channelizers, or on an independent support post. Audible information devices shall not reduce the width of a temporary pedestrian access route to less than 4 ft. Placement of audible information devices shall be as shown on the plans or as directed by the Engineer.

4. Pedestrian traffic signal displays controlling closed crosswalks shall be covered or deactivated.

5. Type A flashing warning lights may be omitted on pedestrian channelizers that support signs and closed sidewalks during daytime only closures.

6. Construction signs shall not reduce the available width of a temporary pedestrian access route to less than 4 ft.

INDIANA DEPARTMENT OF TRANSPORTATION

INDEX AND GENERAL NOTES

SEPTEMBER 2024

STANDARD DRAWING NO. E 801-TPAR-01

DAVID H. BORUFF
REGISTERED
No.
60900348
STATE OF
INDIANA
PROFESSIONAL ENGINEER

David H Boruff 4/26/2024
DESIGN STANDARDS ENGINEER DATE

05/13/2024
CHIEF ENGINEER DATE

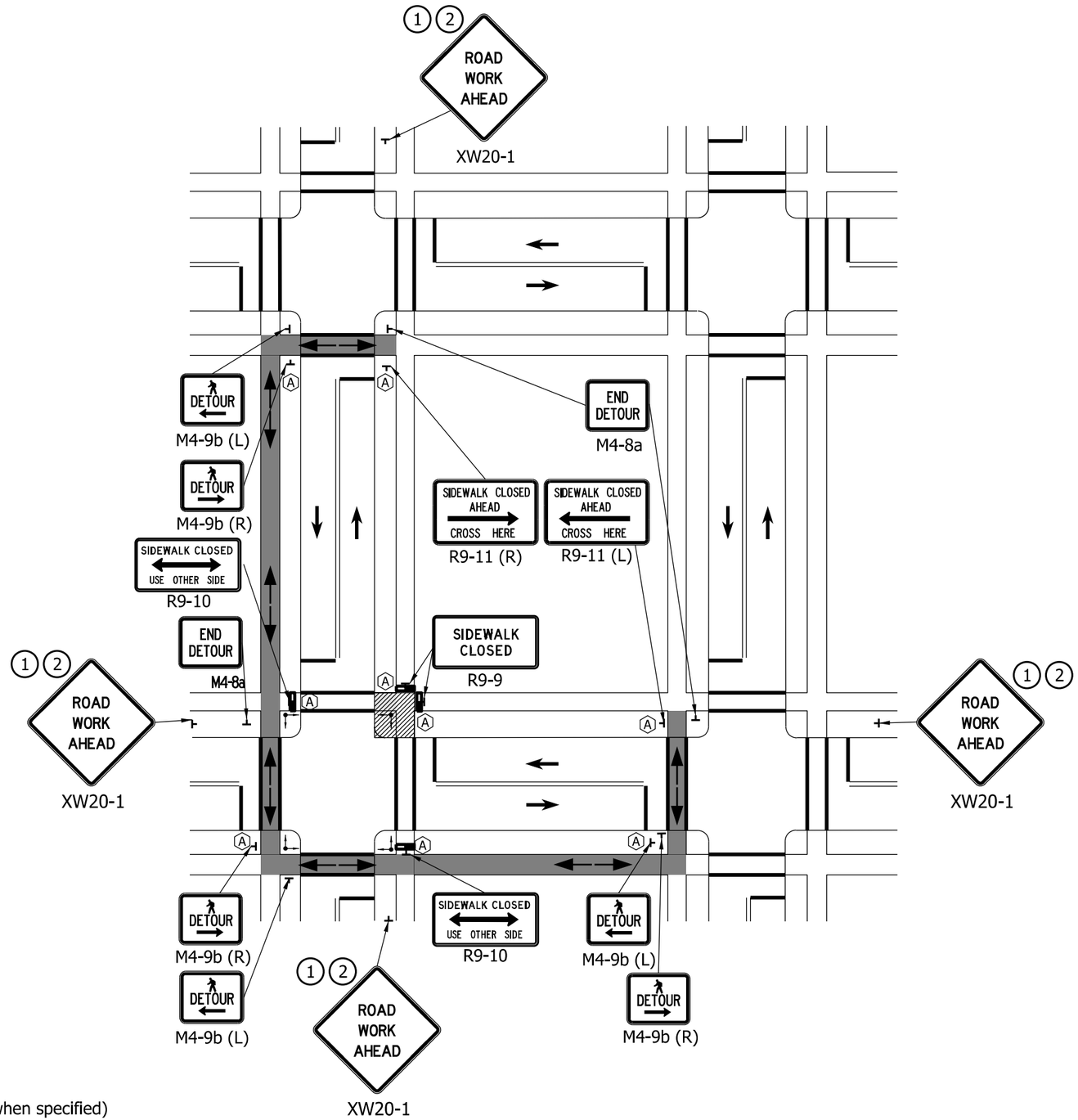

NOTES:

1. Road Work Ahead signs shall be placed a minimum 350 ft in advance of the work area. This distance may be reduced to 100 ft if the permanent posted speed limit is 30 mph or less.
2. When there is no concurrent road construction, the message "Sidewalk Work Ahead" may be used. They shall be placed a minimum of 100 ft in advance of the closure.

LEGEND

- Work Area
- Pedestrian Detour Direction
- Direction of Traffic
- Audible Information Device (when specified)
- Sign (shown facing right)
- Traffic or Pedestrian Signal
- Temporary Pedestrian Channelizer
- Pedestrian Detour Route

INDIANA DEPARTMENT OF TRANSPORTATION

PEDESTRIAN DETOUR CORNER CLOSURE

SEPTEMBER 2026

STANDARD DRAWING NO. E 801-TPAR-02

DAVID H. BORUFF REGISTERED No. 60900348 STATE OF INDIANA PROFESSIONAL ENGINEER

David H Boruff 4/28/2026
DESIGN STANDARDS ENGINEER DATE

04/29/2026
CHIEF ENGINEER DATE

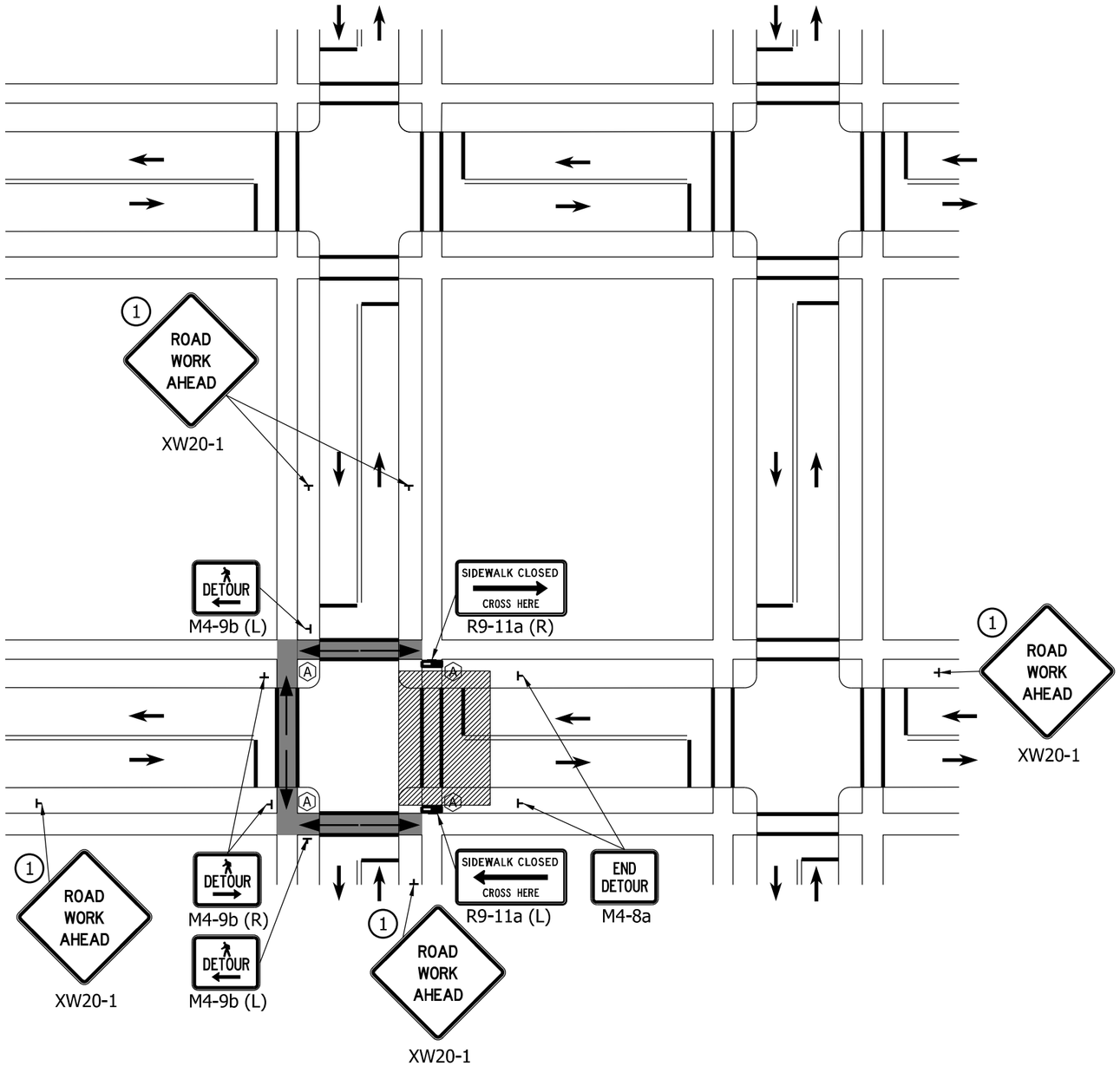

NOTE:

1. Road Work Ahead signs shall be placed a minimum 350 ft in advance of the work area. This distance may be reduced to 100 ft if the permanent posted speed limit is 30 mph or less.

LEGEND

- Work Area
- Pedestrian Detour Direction
- Direction of Traffic
- Audible Information Device (when specified)
- Sign (shown facing right)
- Traffic or Pedestrian Signal
- Temporary Pedestrian Channelizer
- Pedestrian Detour Route

INDIANA DEPARTMENT OF TRANSPORTATION

PEDESTRIAN DETOUR CROSSWALK CLOSURE

SEPTEMBER 2026

STANDARD DRAWING NO. E 801-TPAR-03

DAVID H. BORUFF REGISTERED No. 60900348 STATE OF INDIANA PROFESSIONAL ENGINEER

David H Boruff 4/28/2026

DESIGN STANDARDS ENGINEER DATE

04/29/2026

CHIEF ENGINEER DATE

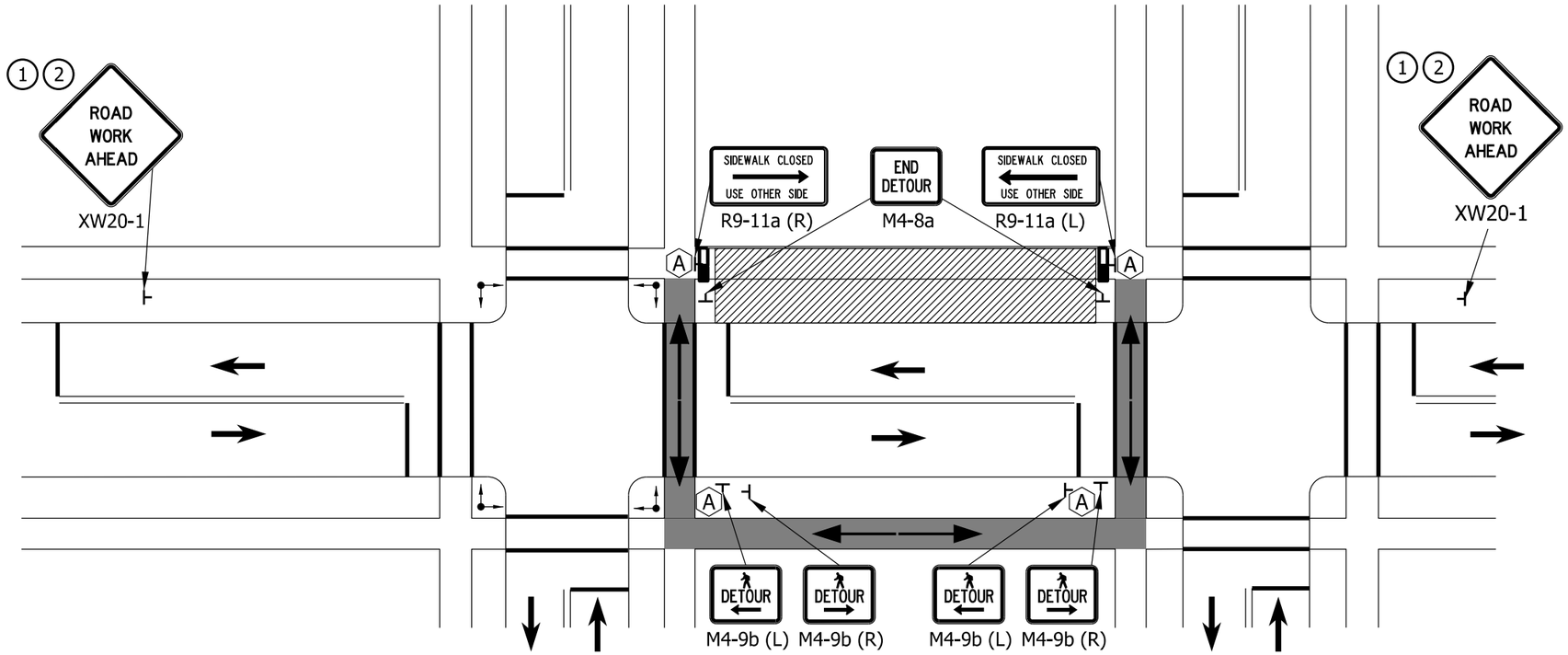

NOTES:

1. Road Work Ahead signs shall be placed a minimum 350 ft in advance of the work area. This distance may be reduced to 100 ft if the permanent posted speed limit is 30 mph or less.
2. When there is no concurrent road construction, the message "Sidewalk Work Ahead" may be used. They shall be placed a minimum of 100 ft in advance of the closure.
3. The Contractor shall coordinate any on-street parking restrictions with the local public agency.

LEGEND

- Work Area
- Pedestrian Detour Direction
- Direction of Traffic
- Audible Information Device (when specified)
- Sign (shown facing right)
- Traffic or Pedestrian Signal
- Temporary Pedestrian Channelizer
- Pedestrian Detour Route

INDIANA DEPARTMENT OF TRANSPORTATION

PEDESTRIAN DETOUR FULL BLOCK CLOSURE

SEPTEMBER 2026

STANDARD DRAWING NO. E 801-TPAR-04

DAVID H. BORUFF REGISTERED No. 60900348 STATE OF INDIANA PROFESSIONAL ENGINEER

David H Boruff 4/28/2026

DESIGN STANDARDS ENGINEER DATE

04/29/2026

CHIEF ENGINEER DATE

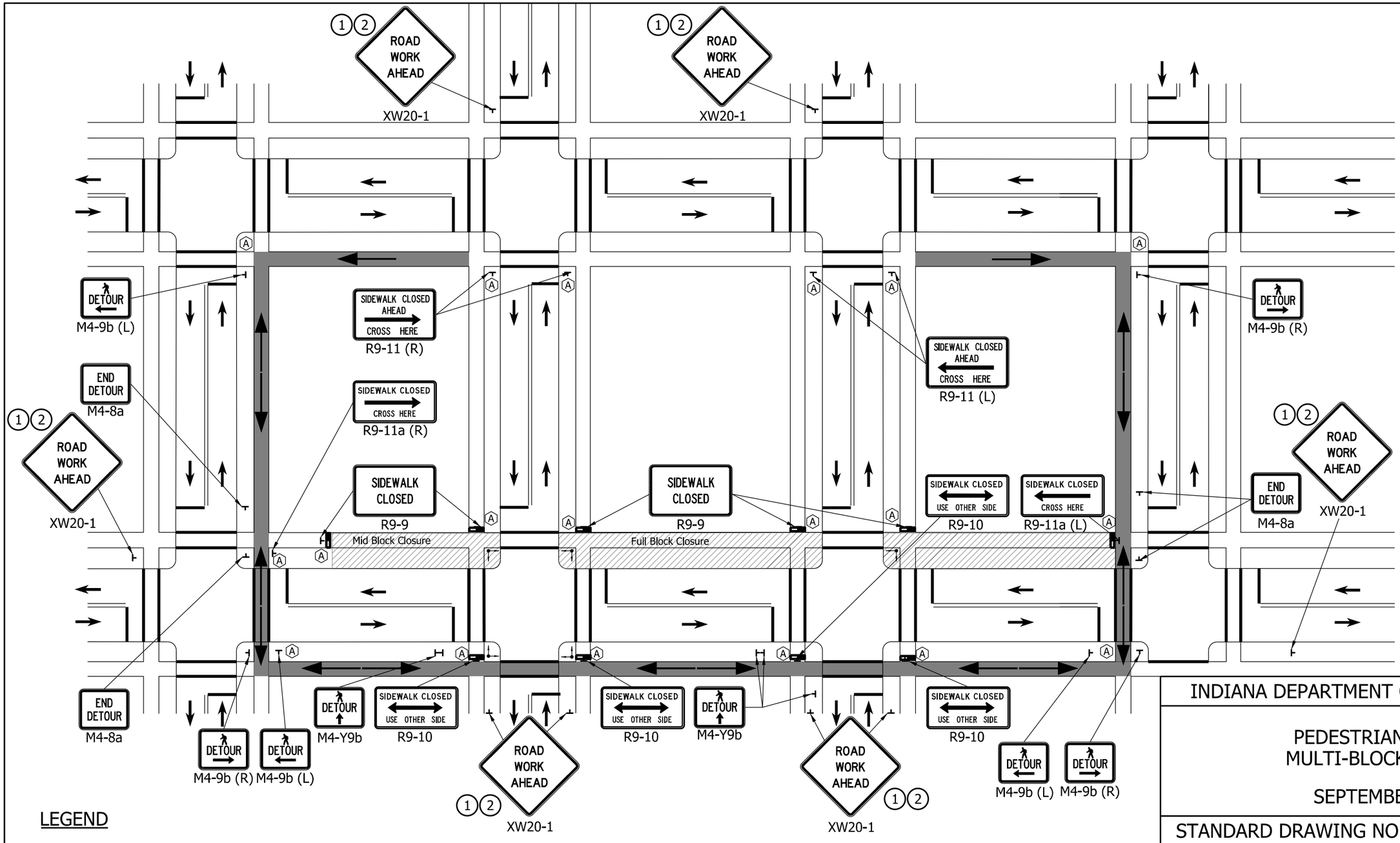

LEGEND

- Work Area
- Pedestrian Detour Direction
- Direction of Traffic
- Audible Information Device (when specified)
- Sign (shown facing right)
- Traffic or Pedestrian Signal
- Temporary Pedestrian Channelizer
- Pedestrian Detour Route

NOTES:

1. Road Work Ahead signs shall be placed a minimum 350 ft in advance of the work area. This distance may be reduced to 100 ft if the permanent posted speed limit is 30 mph or less.
2. When there is no concurrent road construction, the message "Sidewalk Work Ahead" may be used. They shall be placed a minimum of 100 ft in advance of the closure.
3. The Contractor shall coordinate any on-street parking restrictions with the local public agency.

INDIANA DEPARTMENT OF TRANSPORTATION

PEDESTRIAN DETOUR MULTI-BLOCK CLOSURE

SEPTEMBER 2026

STANDARD DRAWING NO. E 801-TPAR-05

DAVID H. BORUFF REGISTERED No. 60900348 STATE OF INDIANA PROFESSIONAL ENGINEER

DESIGN STANDARDS ENGINEER — DATE 3/28/2026

CHIEF ENGINEER — DATE 04/29/2026

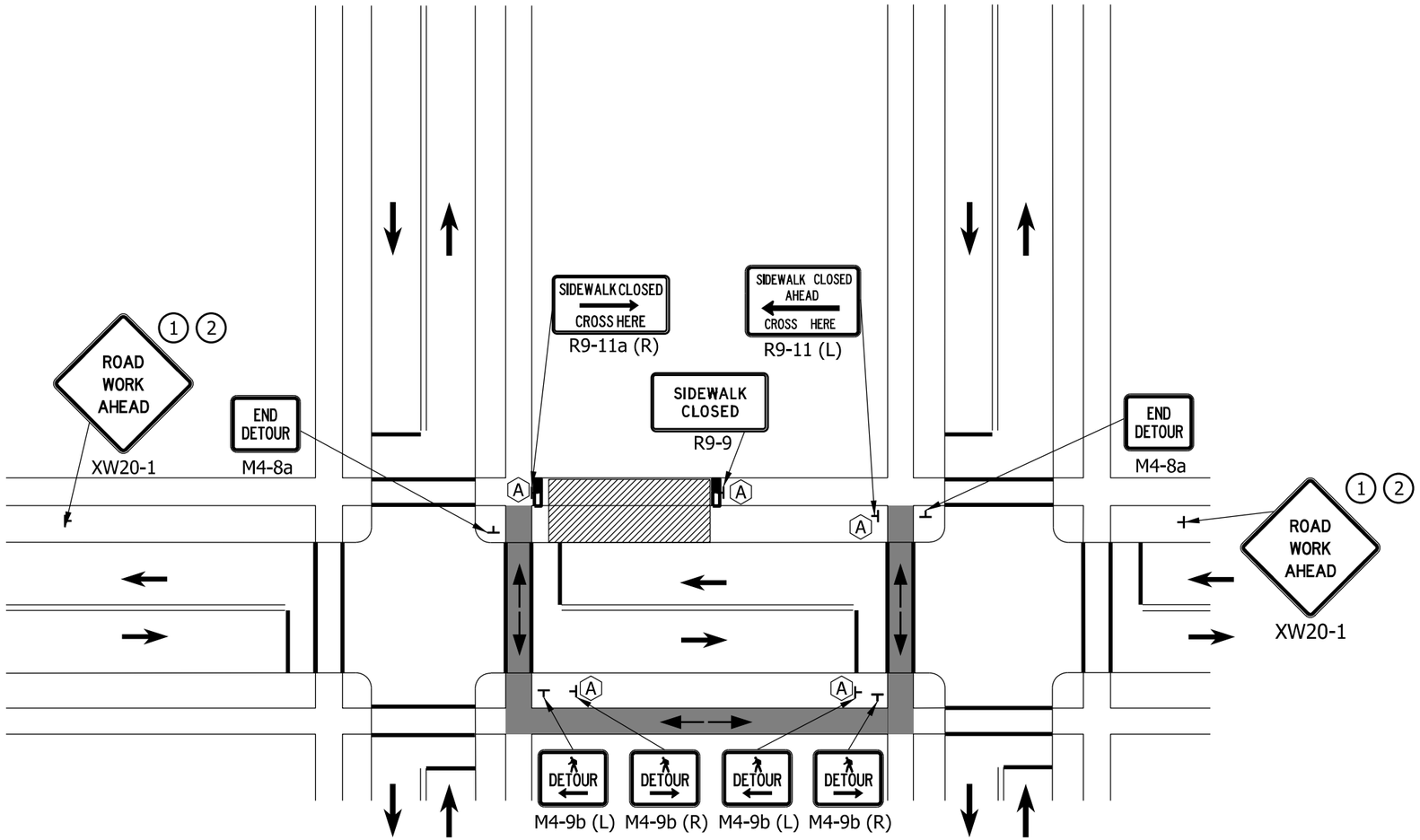

NOTES:

1. Road Work Ahead signs shall be placed a minimum 350 ft in advance of the work area. This distance may be reduced to 100 ft if the permanent posted speed limit is 30 mph or less.
2. When there is no concurrent road construction, the message "Sidewalk Work Ahead" may be used. They shall be placed a minimum of 100 ft in advance of the closure.
3. The Contractor shall coordinate any on-street parking restrictions with the local public agency.

LEGEND

- Work Area
- Pedestrian Detour Direction
- Direction of Traffic
- (A) Audible Information Device (when specified)
- Sign (shown facing right)
- Traffic or Pedestrian Signal
- Temporary Pedestrian Channelizer
- Pedestrian Detour Route

INDIANA DEPARTMENT OF TRANSPORTATION

PEDESTRIAN DETOUR MIDBLOCK CLOSURE

SEPTEMBER 2026

STANDARD DRAWING NO. E 801-TPAR-06

DAVID H. BORUFF REGISTERED No. 60900348 STATE OF INDIANA PROFESSIONAL ENGINEER

David H Boruff 4/28/2026
DESIGN STANDARDS ENGINEER DATE

04/29/2026
CHIEF ENGINEER DATE

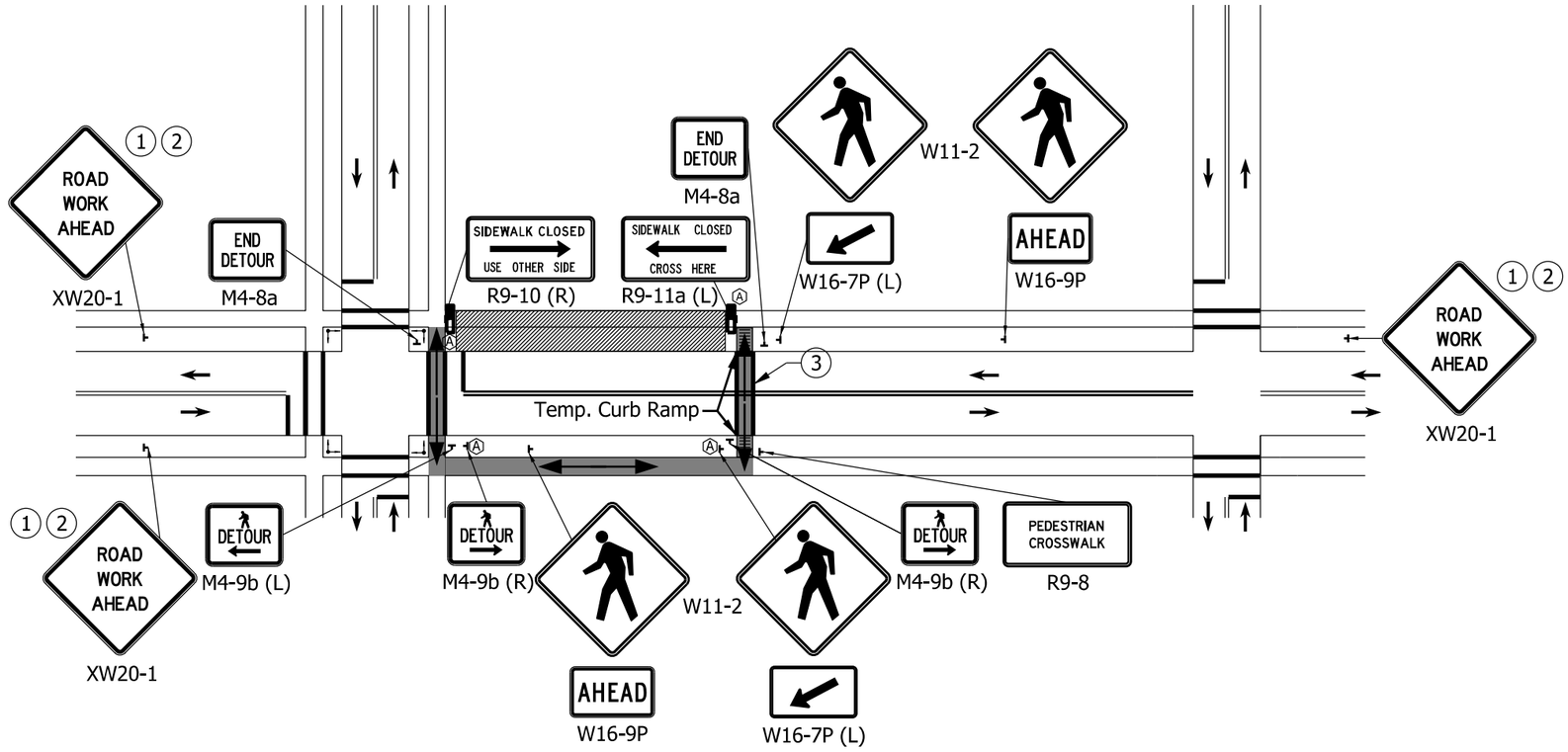

NOTES:

1. Road Work Ahead and Crosswalk Ahead signs shall be placed a minimum 500 ft and 350 ft, respectively, in advance of the work area. This distance may be reduced to 200 ft and 100 ft, respectively, if the permanent posted speed limit is 30 mph or less.
2. When there is no concurrent road construction, the message "Sidewalk Work Ahead" may be used. They shall be placed a minimum of 100 ft in advance of the closure.
3. White temporary crosswalk lines shall be a minimum of 6 inches in width and written approval from the District Traffic Engineer is required prior to placing the crosswalk lines and W11-2 and W16-7P sign assemblies.
4. The Contractor shall coordinate any on-street parking restrictions with the local public agency.
5. A temporary crossing shall not be used if the AADT is > 12,000 or when there is an adjacent intersection with crosswalks within one block.

LEGEND

- Work Area
- Pedestrian Detour Direction
- Direction of Traffic
- Audible Information Device (when specified)
- Sign (shown facing right)
- Traffic or Pedestrian Signal
- Temporary Pedestrian Channelizer
- Pedestrian Detour Route
- Temp. Curb Ramp

INDIANA DEPARTMENT OF TRANSPORTATION

PEDESTRIAN DETOUR TEMPORARY MIDBLOCK CLOSURE WITH TEMPORARY CROSSING

SEPTEMBER 2026

STANDARD DRAWING NO. E 801-TPAR-07

DAVID H. BORUFF REGISTERED No. 60900348 STATE OF INDIANA PROFESSIONAL ENGINEER

David H Boruff 4/28/2026
DESIGN STANDARDS ENGINEER DATE

04/29/2026
CHIEF ENGINEER DATE

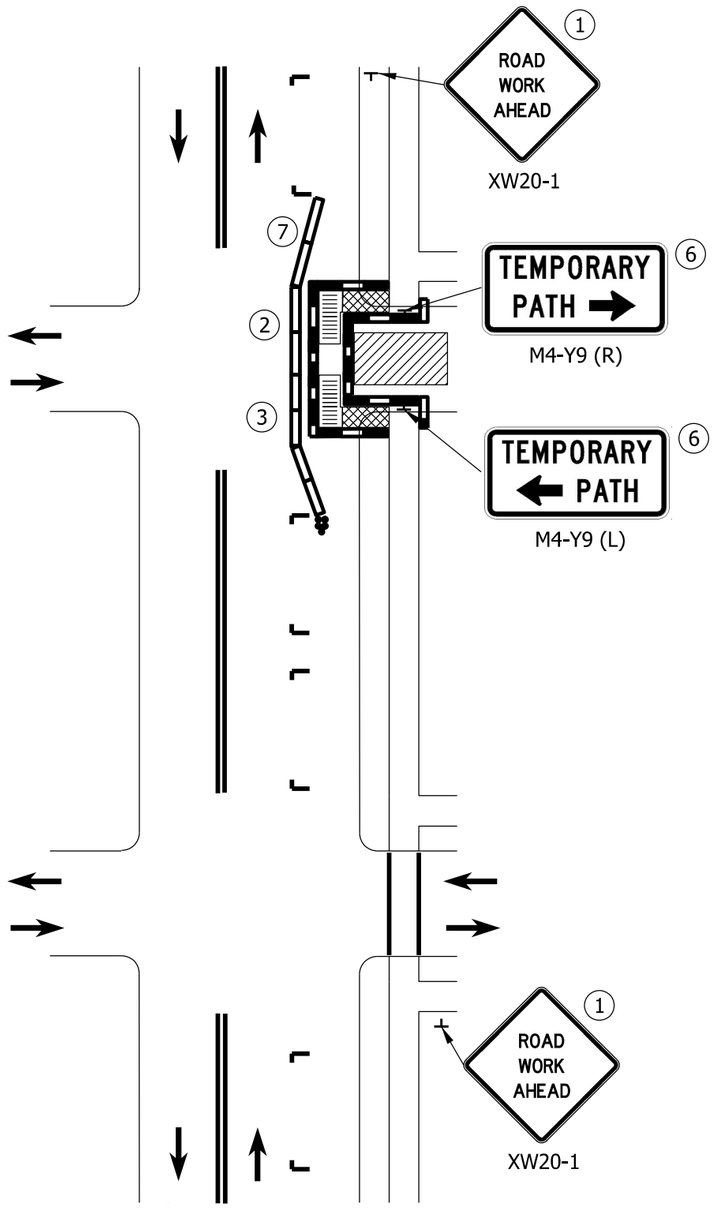

LEGEND

- Work Area
- Direction of Traffic
- Temp Access Path
- Sign (shown facing right)
- Temporary Pedestrian Channelizer
- Temp. Curb Ramp
- Traffic Barrier (when specified)
- Crash Cushion (when specified)

NOTES:

1. Road Work Ahead signs shall be placed a minimum 350 ft in advance of the work area. The distance may be reduced to 100 ft if the permanent posted speed limit is 30 mph or less.
2. See E 801-TCTC Series for temporary road closure signage.
3. For nighttime closures, Type A Flashing warning lights shall be used on barricades that support signs and close sidewalks.
4. Type 2 Temporary Traffic Barrier shall be used in addition to the temporary pedestrian channelizer, if the posted speed limit is 35 mph or greater.
5. Any pedestrian devices used to provide positive protection (traffic or hazard) for pedestrians or workers shall be Type 2 Temporary Traffic Barrier.
6. When specified, M4-Y9 signs shall be 24" x 12" with 3 inch C series font and a 6" x 4" arrow.
7. See Standard Drawing series 801-TCCB for Temporary Traffic Barrier flare rate.

INDIANA DEPARTMENT OF TRANSPORTATION

PEDESTRIAN DIVERSION, STREETSIDE AT INTERSECTION

SEPTEMBER 2026

STANDARD DRAWING NO. E 801-TPAR-08

DAVID H. BORUFF
REGISTERED
No. 60900348
STATE OF INDIANA
PROFESSIONAL ENGINEER

David H Boruff 4/28/2026
DESIGN STANDARDS ENGINEER DATE

04/29/2026
CHIEF ENGINEER DATE

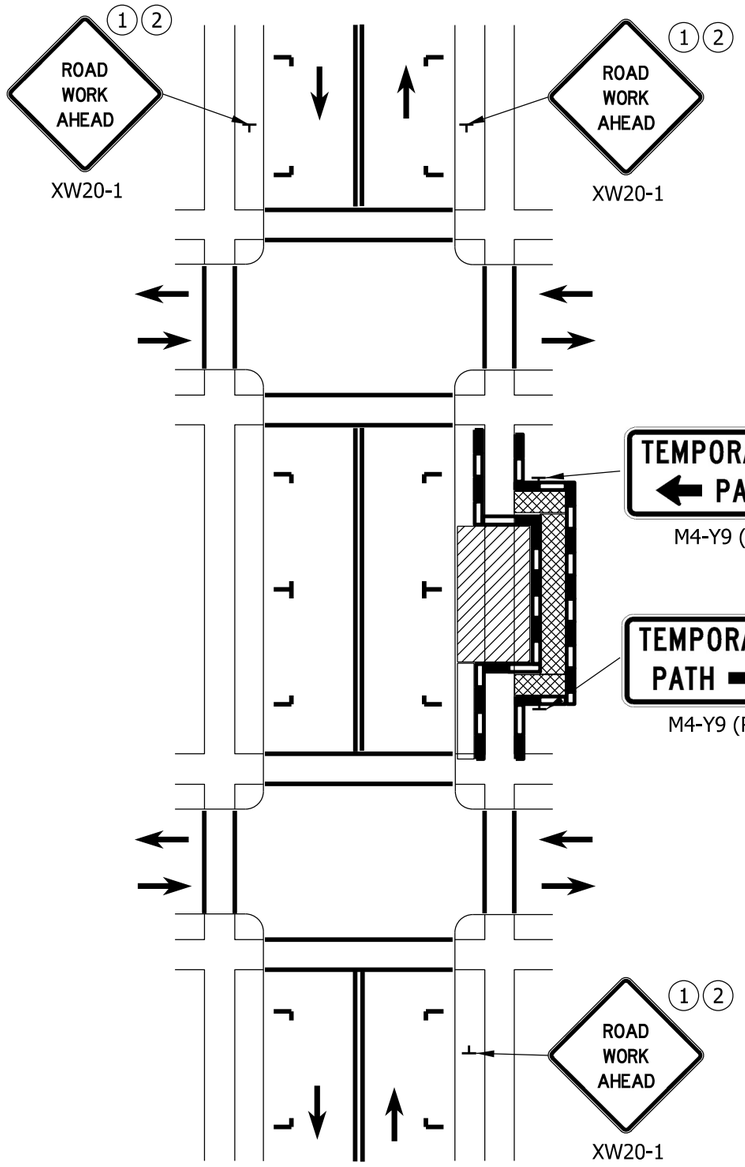

MIDBLOCK DIVERSION

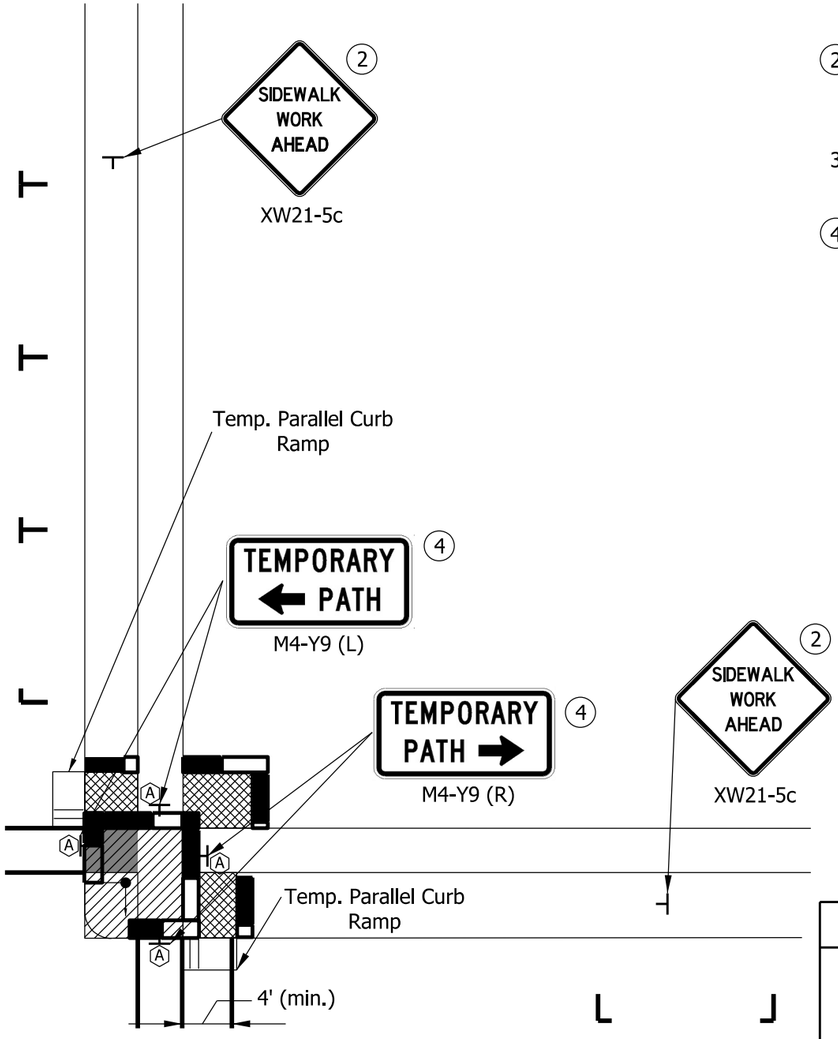

CORNER DIVERSION

NOTES:

1. Road Work Ahead signs shall be placed a minimum 350 ft in advance of the work area. This distance may be reduced to 100 ft if the permanent posted speed limit is 30 mph or less.
2. When there is no concurrent road construction, the message "Sidewalk Work Ahead" may be used. They shall be placed a minimum of 100 ft in advance of the closure.
3. The Contractor shall coordinate any on-street parking restrictions with the local public agency.
4. When specified, M4-Y9 signs shall be 24" x 12" with 3 inch C series font and a 6" x 4" arrow.

LEGEND

- Work Area
- Direction of Traffic
- Temp Access Path
- Audible Information Device (when specified)
- Sign (shown facing right)
- Temp. Curb Ramp
- Temporary Pedestrian Channelizer

INDIANA DEPARTMENT OF TRANSPORTATION

PEDESTRIAN DIVERSION, RIGHT-OF-WAY SIDE

SEPTEMBER 2026

STANDARD DRAWING NO. E 801-TPAR-09

DAVID H. BORUFF REGISTERED No. 60900348 STATE OF INDIANA PROFESSIONAL ENGINEER

4/28/2026
DESIGN STANDARDS ENGINEER DATE

04/29/2026
CHIEF ENGINEER DATE

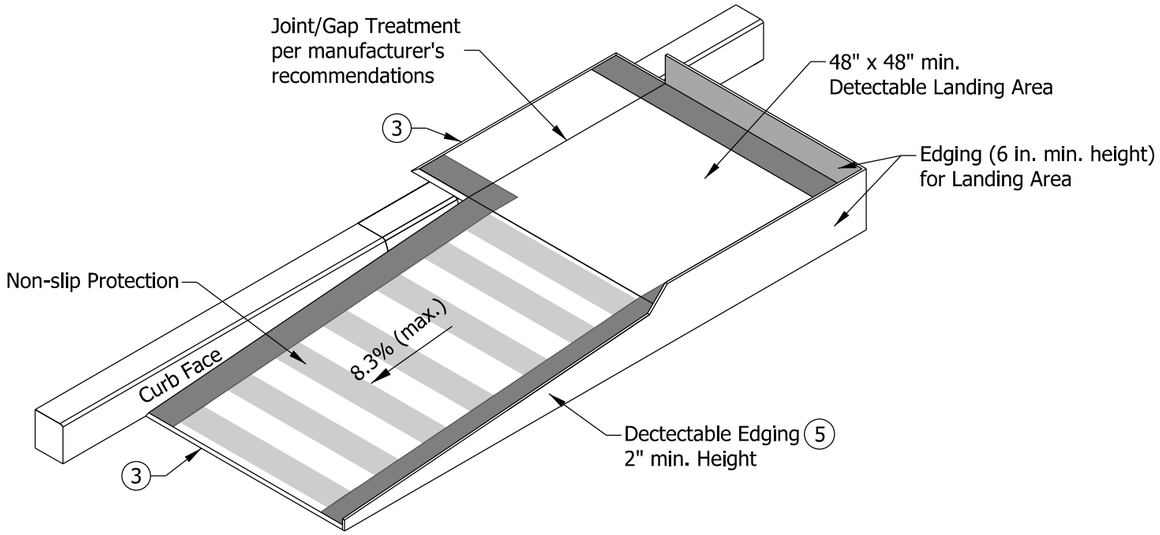

Temporary Curb Ramp - Parallel to Curb

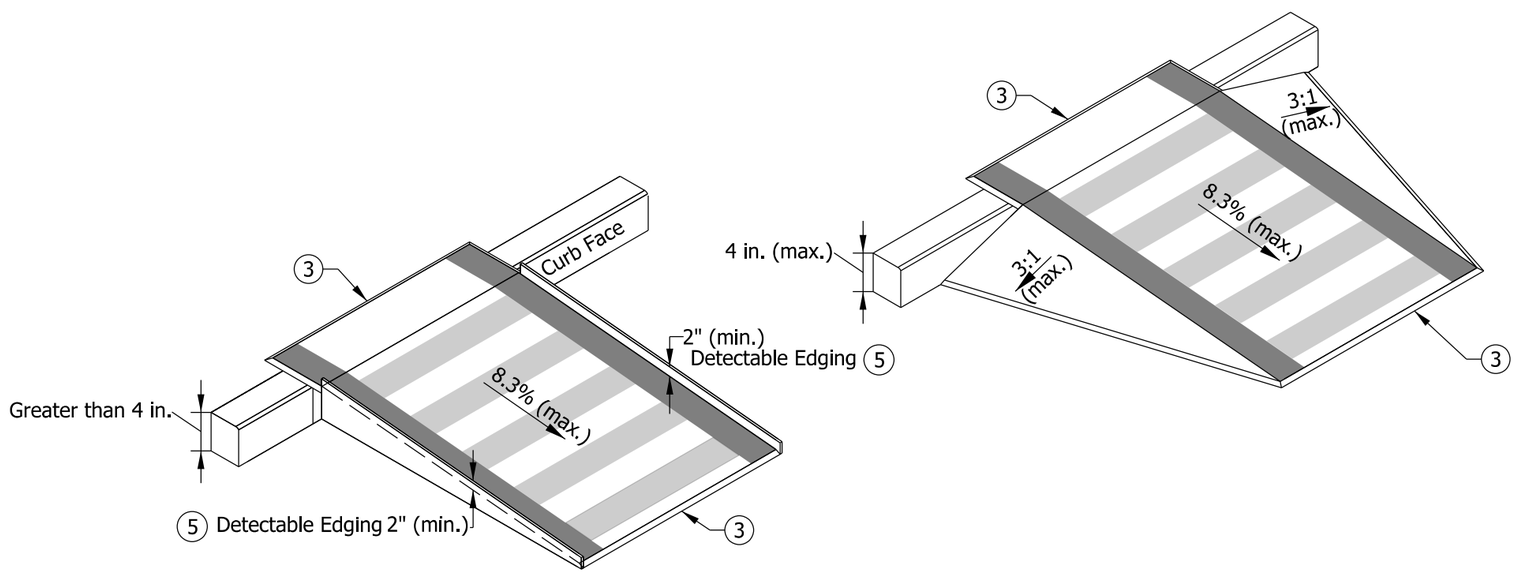

Temporary Curb Ramp - Perpendicular to Curb

NOTES:

1. Water flow in the gutter system shall be maintained.
2. Lateral joints or gaps between surfaces shall be less than 0.5 in. width.
3. Changes in level between surface heights shall not exceed 0.5 in. Lateral edges shall be vertical up to 0.25 in. high, and beveled at 2:1 between 0.25 in. and 0.5 in. in height
4. Handrail shall be provided along a landing area and ramp where the elevation difference between the sidewalk and the street is greater than 6.0 in.
5. A 2.0 in. detectable edge shall be provided along the entire length of the ramp where the elevation difference between the sidewalk and the street is greater than 4.0 in.
6. The rise of a single temporary curb ramp shall be no more than 30 in. If more than one temporary curb ramp is needed at a location due to the change in elevation, a minimum 5 ft landing area shall be used between curb ramps. The landing area shall have a slope of less than 2.0%.
7. The table below is for common curb heights, the curb ramp length for other curb heights shall be based on having a maximum slope of 12:1.

Curb Height (in.)	Minimum Temporary Curb Ramp Length (ft)
3	3
4	4
5	5
6	6

INDIANA DEPARTMENT OF TRANSPORTATION

TEMPORARY
CURB RAMPS

SEPTEMBER 2024

STANDARD DRAWING NO. E 801-TPAR-10

DAVID H. BORUFF
REGISTERED
No.
60900348
STATE OF
INDIANA
PROFESSIONAL ENGINEER

David H. Boruff 4/26/2024
DESIGN STANDARDS ENGINEER DATE

05/13/2024
CHIEF ENGINEER DATE

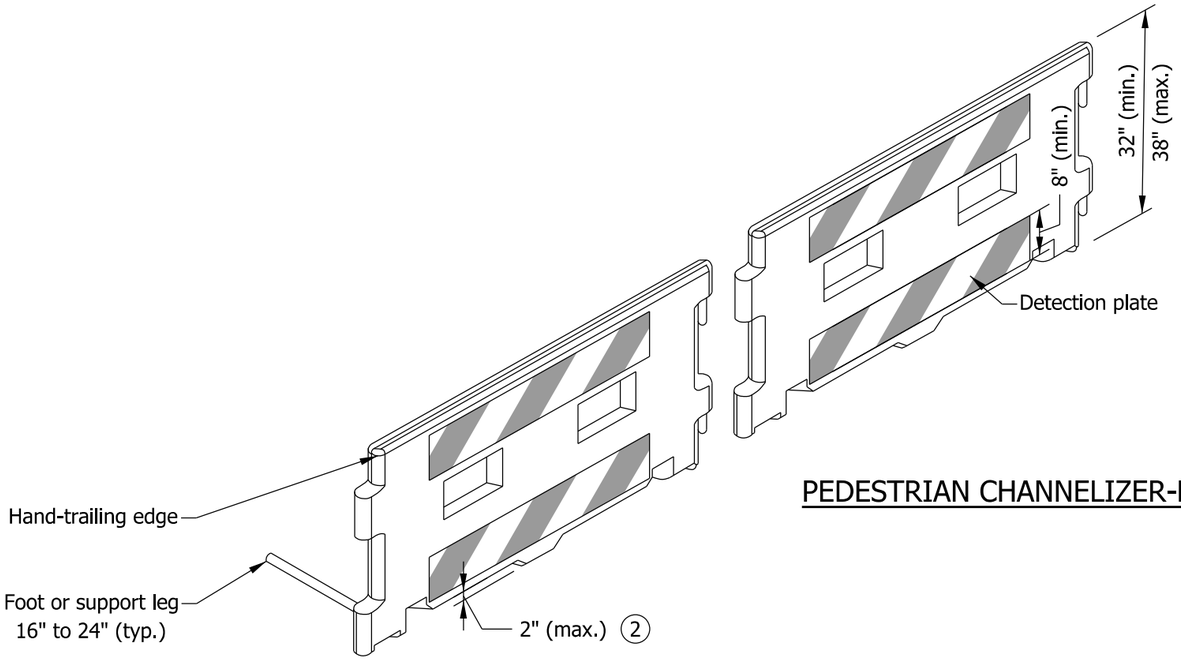

PEDESTRIAN CHANNELIZER-BARRIER STYLE

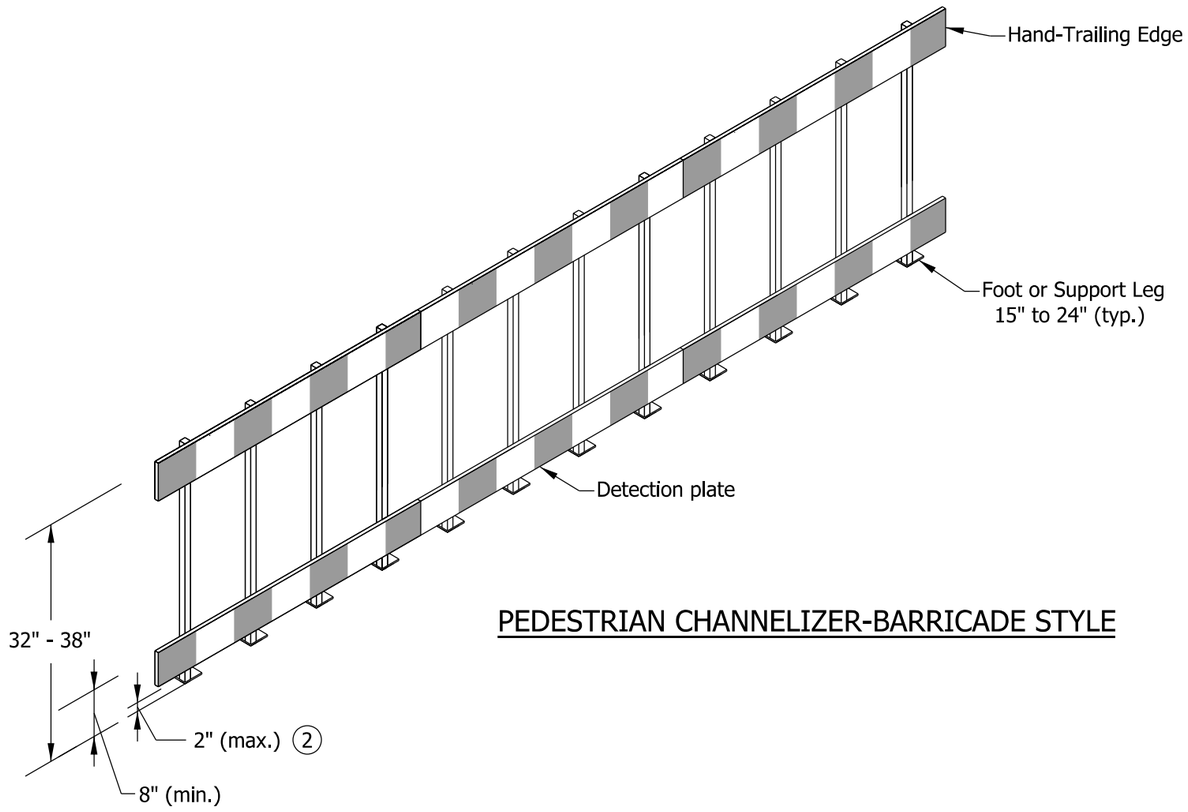

PEDESTRIAN CHANNELIZER-BARRICADE STYLE

NOTES:

1. Ballast shall be located behind or internal to the device. Any support on the front of the device shall not extend into the 48 in. minimum walkway clear space and shall have 0.25 in. max. height above the walkway surface.

(2) Devices shall not block water drainage from the walkway. A gap height or opening from the walkway surface up to 2 in. max. height is allowed for drainage purposes.

3. Type III Barricades shall not be used as pedestrian channelizers.

4. The hand-trailing edge and detection plate shall have alternating orange and white reflective sheeting oriented vertically or at a 45° angle.

INDIANA DEPARTMENT OF TRANSPORTATION

TEMPORARY PEDESTRIAN CHANNELIZERS

SEPTEMBER 2024

STANDARD DRAWING NO. E 801-TPAR-11

DAVID H. BORUFF REGISTERED No. 60900348 STATE OF INDIANA PROFESSIONAL ENGINEER

David H Boruff 4/26/2024
DESIGN STANDARDS ENGINEER DATE

05/13/2024
CHIEF ENGINEER DATE

INDEX	
SHEET NO.	SUBJECT
1	Dynamic Message Sign Butterfly Cantilever Structure Index
2	Structure Plan, Elevation, Member Sizes, and Camber
3	Quadri-Chord and Flange Details
4	Upper Chords Connection Details
5	Lower Chords Connection Details
6	Base Plate, Anchor Bolt, and Metal Skirt Details
7	Handhole and I.D. Tag Details
8	Access Details
9	Walkway Details
10	Handrail Details
11	Ladder Details
12	Security Gate Details
13	Wiring Layout Details
14	Foundation at 33" Concrete Barrier
15	Foundation at 45" Concrete Barrier
16	Foundation 4'-0" Ø Drilled Shaft

GENERAL NOTES:

1. All butterfly tubular structure members shall be steel in accordance with ASTM A 53, Grade B.
2. All anchor bolts shall be in accordance with ASTM F1554, Grade 36.
3. Plates, bars and rolled shapes shall be in accordance with ASTM A36.
4. Refer to the Standard Specifications for acceptable alternate materials.

INDIANA DEPARTMENT OF TRANSPORTATION

DYNAMIC MESSAGE SIGN BUTTERFLY
CANTILEVER STRUCTURE
INDEX
SEPTEMBER 2025

STANDARD DRAWING NO. E 802-DBCS-01

DAVID H. BORUFF
REGISTERED
No.
60900348
STATE OF
INDIANA
PROFESSIONAL ENGINEER

4/8/25
DESIGN STANDARDS ENGINEER DATE

04/16/2025
CHIEF ENGINEER DATE

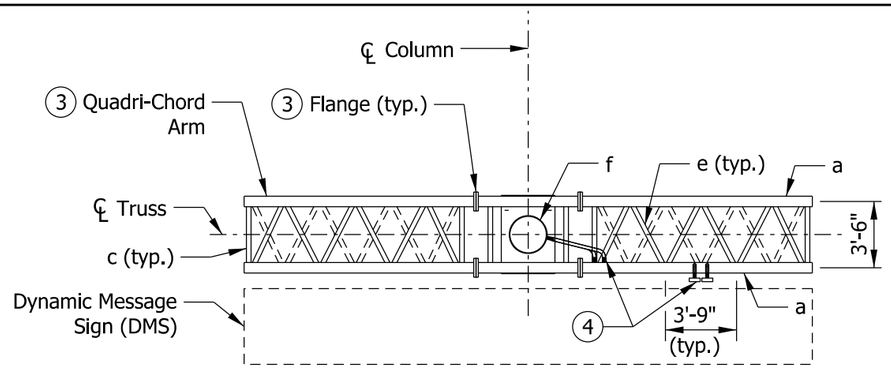

PLAN

(Ladder, Walkway and Handrail not shown for clarity)

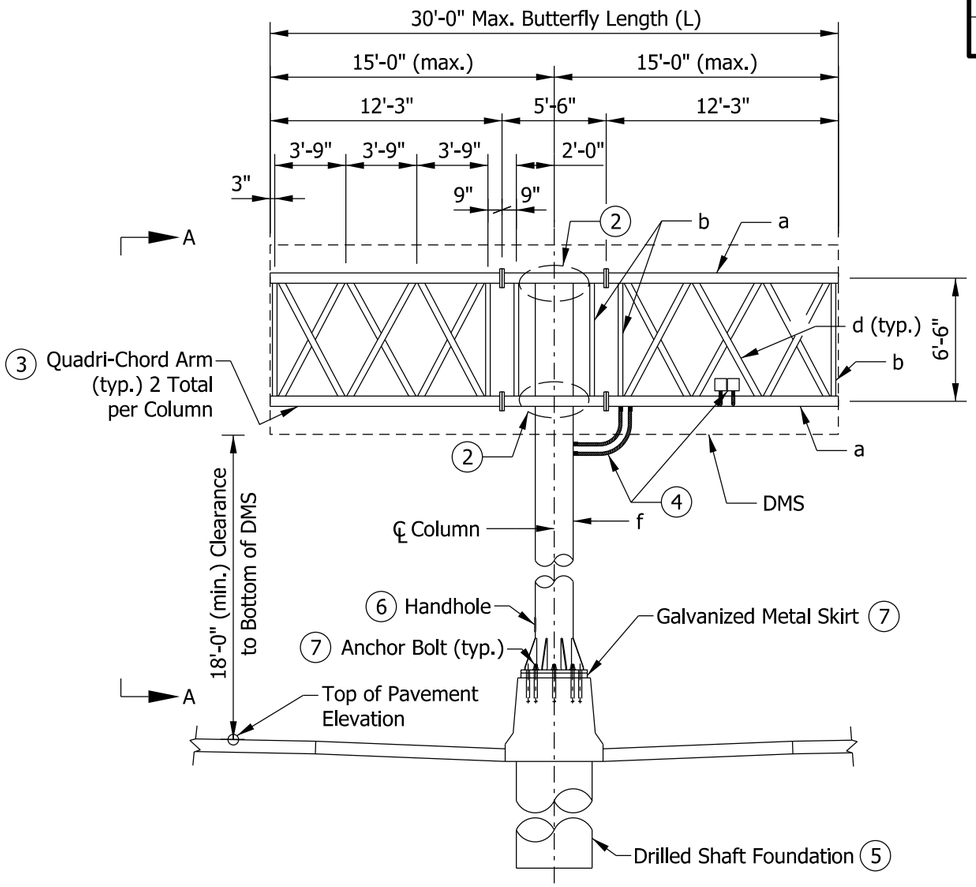

ELEVATION

(Ladder, Walkway and Handrail not shown for clarity)

MAX SIGN AREA = 300 sq. ft. (30' x 10') MAX. MOUNTING HEIGHT = 21'-9"		
MEMBER	MARK	O.D. (IN.) x WALL THK. (IN.)
CHORD	a	6.625 x 0.432
VERTICAL	b	2.875 x 0.276
HORIZONTAL	c	2.875 x 0.276
VERTICAL DIAGONAL	d	4 x 0.318
HORIZONTAL DIAGONAL	e	2.875 x 0.276
COLUMN	f	24 x 0.500

MEMBER SIZES

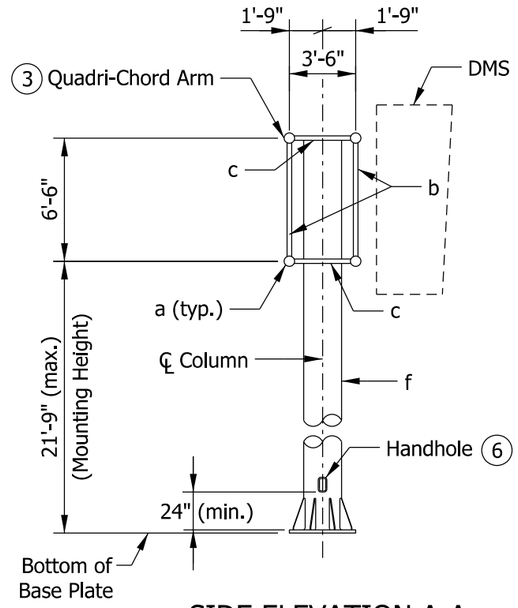

SIDE ELEVATION A-A

(Ladder, Walkway, Handrail and Foundation not shown for clarity)

NOTES:

1. Maximum deviation of any chord from a straight line shall be ⅛ in.
2. See Standard Drawing E 802-DBCS-04 and 05 for upper and lower chord connection details.
3. See Standard Drawing E 802-DBCS-03 for quadri-chord and flange details.
4. See Standard Drawing E 802-DBCS-13 for wiring layout and wire outlet details.
5. See Standard Drawing E 802-DBCS-14-16 for foundation details.
6. See Standard Drawing E 802-DBCS-07 for handhole and I.D. tag details.
7. See Standard Drawing E 802-DBCS-06 for base plate, anchor bolt, and metal skirt details.
8. Maximum dead load weight of DMS sign shall be 5,000 lbs.

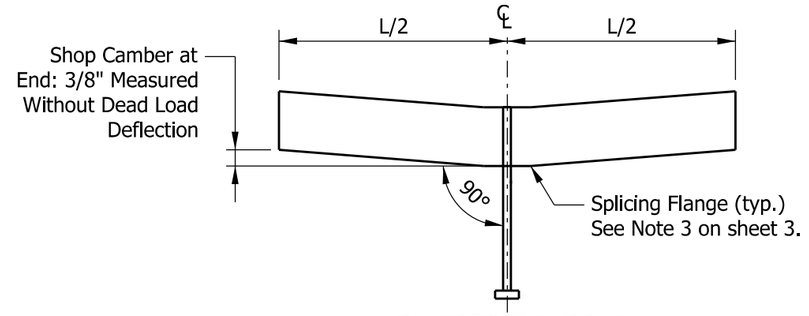

CAMBER DIAGRAM

INDIANA DEPARTMENT OF TRANSPORTATION

STRUCTURE PLAN, ELEVATION, MEMBER SIZES, AND CAMBER

SEPTEMBER 2025

STANDARD DRAWING NO. E 802-DBCS-02

DAVID H. BORUFF REGISTERED No. 60900348 STATE OF INDIANA PROFESSIONAL ENGINEER

David H Boruff 4/8/25

DESIGN STANDARDS ENGINEER DATE

04/16/2025

CHIEF ENGINEER DATE

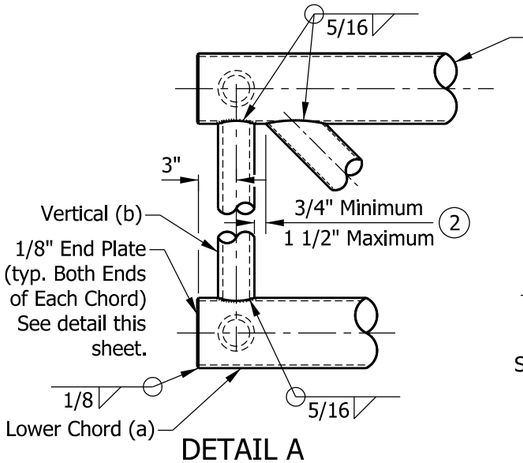

DETAIL A

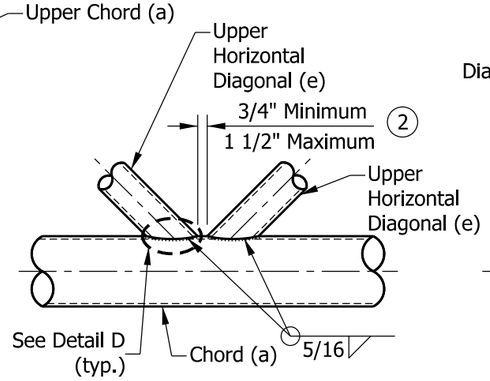

DETAIL B

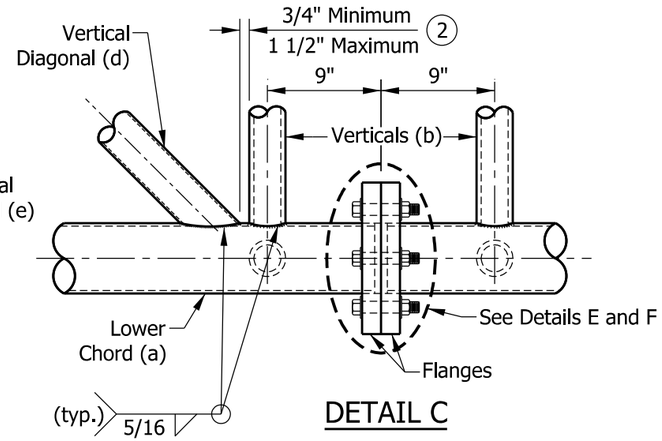

DETAIL C

NOTES:

1. See Standard Drawings E 802-DBCS-04 and 05 for upper and lower chords connection details.
2. Diagonals shall have a minimum offset from the panel point based on the following: Offset shall be such as to provide a ¾ in. minimum to 1½ in. maximum clearance between any diagonal and any vertical member, and to provide clearance for U-bolt connections of signs.
3. Splicing flanges shall be attached to each arm unit with the arm shop-assembled to camber shown. Arm units shall be in proper alignment and flange surfaces shall be shop-bolted into full contact before welding. Sufficient external welds or tacks shall be made to secure flanges until remaining welds are made after disassembly. Adjacent flanges shall be "match marked" to ensure proper field assembly.
4. Toe edge of diagonal member shall be cut back to facilitate throat thickness per AWS D1.1, Figure 3.2.

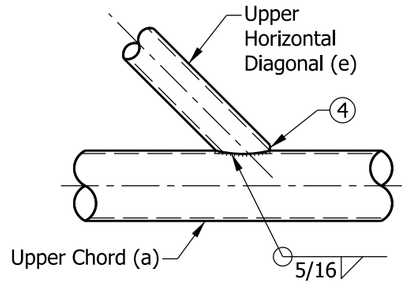

DETAIL D

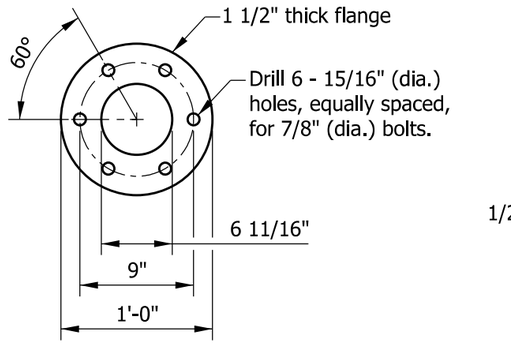

DETAIL E
FLANGE

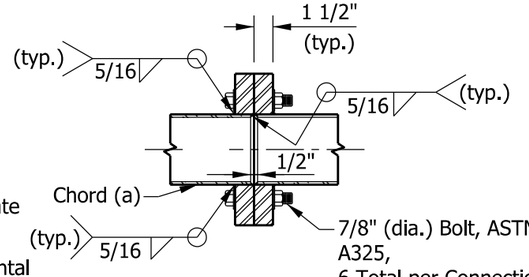

DETAIL F
FLANGE

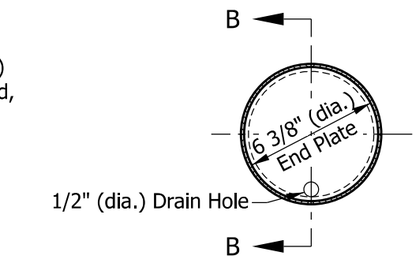

END VIEW

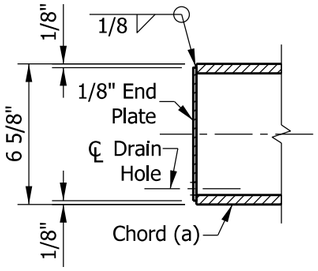

SECTION B-B

CHORD END PLATE DETAIL

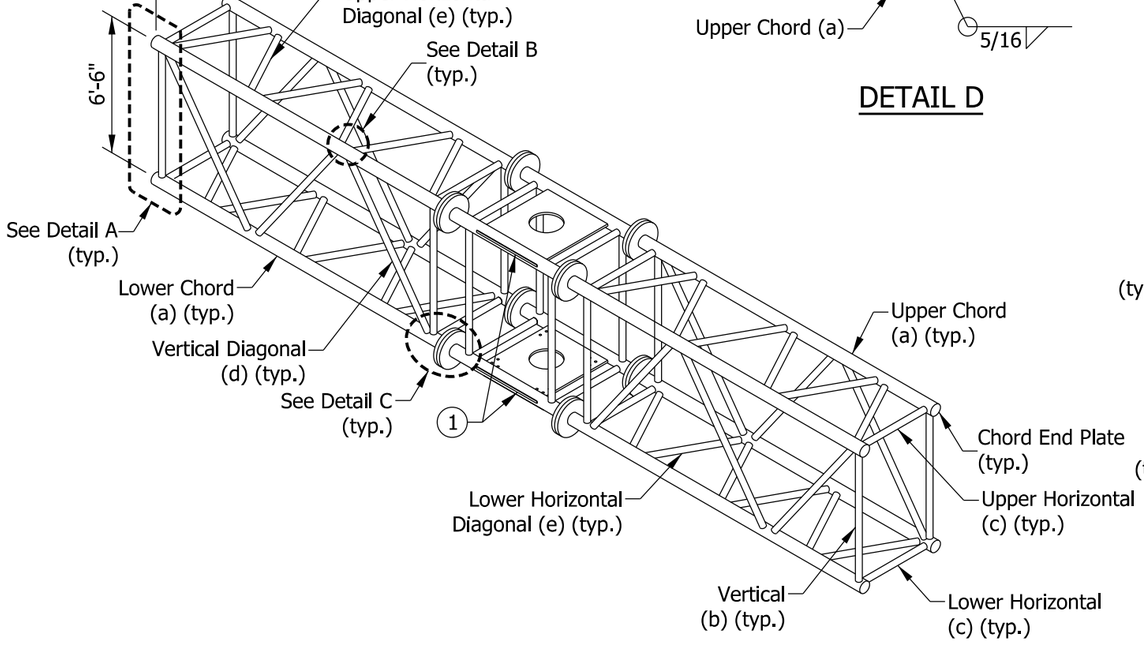

TYPICAL QUADRI-CHORD ARM PAIR

INDIANA DEPARTMENT OF TRANSPORTATION

QUADRI-CHORD AND FLANGE DETAILS

SEPTEMBER 2025

STANDARD DRAWING NO. E 802-DBCS-03

DAVID H. BORUFF
REGISTERED
No. 60900348
STATE OF INDIANA
PROFESSIONAL ENGINEER

David H Boruff 4/8/25
DESIGN STANDARDS ENGINEER DATE

04/16/2025
CHIEF ENGINEER DATE

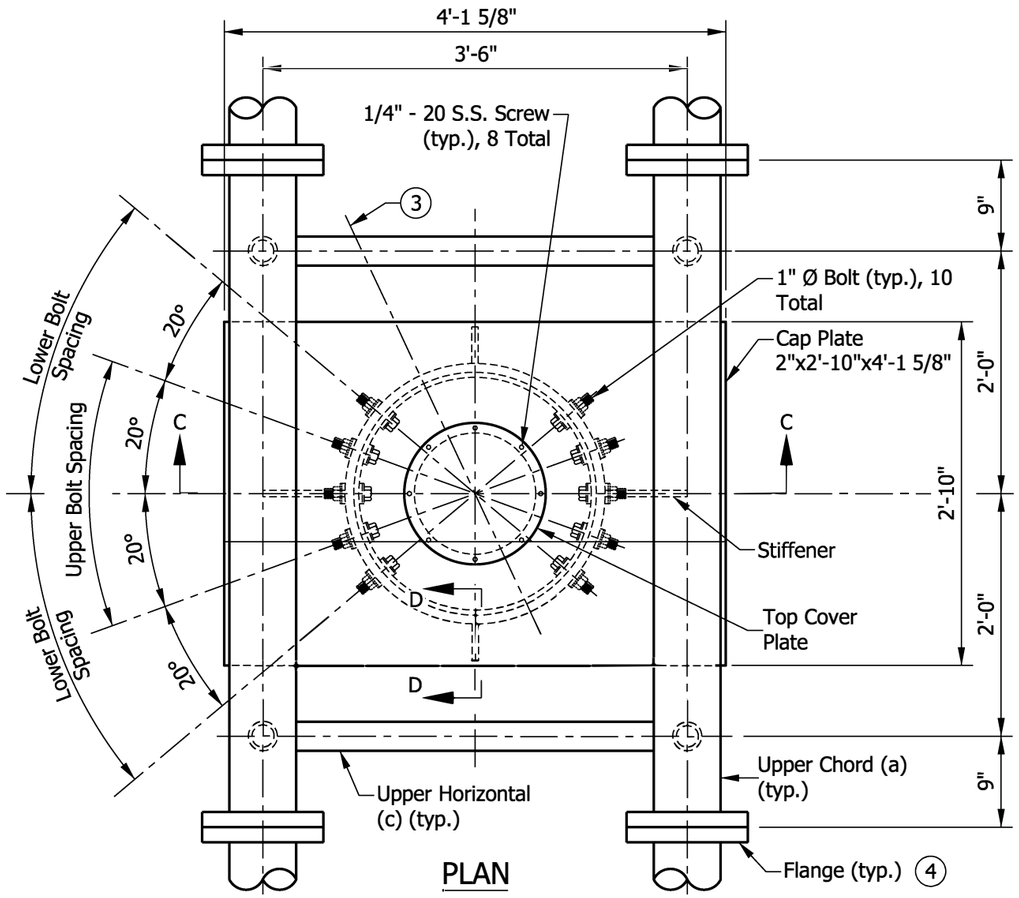

PLAN

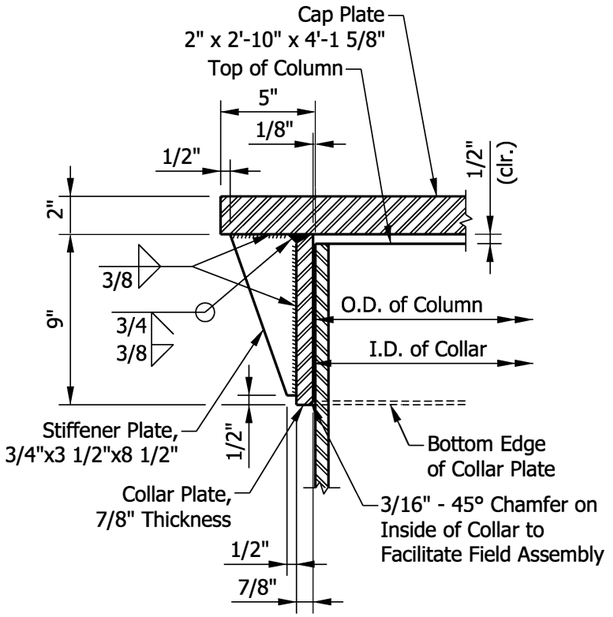

SECTION D-D

NOTES:

1. Connection bolts in collar and bolts at lower chord connection shall be high strength with matching locknuts. Connection bolts shall each have two (2) stainless steel flat, washers. Bolts, contoured washers, and locknuts shall be galvanized.
2. After galvanizing, collar inside diameter shall equal outside diameter of galvanized column plus ⅛ in. (±1/16 in.). Maximum gap between column and collar at any location shall be ⅛ in. before tightening bolts.

(3) Optional full-penetration weld in collar may be made at two locations 180° apart. X-ray or UT 100%.

(4) See Standard Drawing E 802-DBCS-03 for flange details.

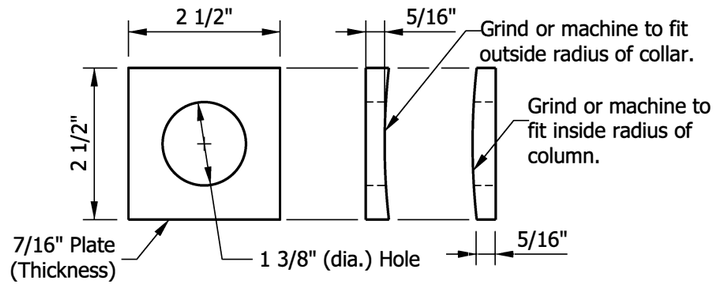

CONTOURED WASHER DETAIL

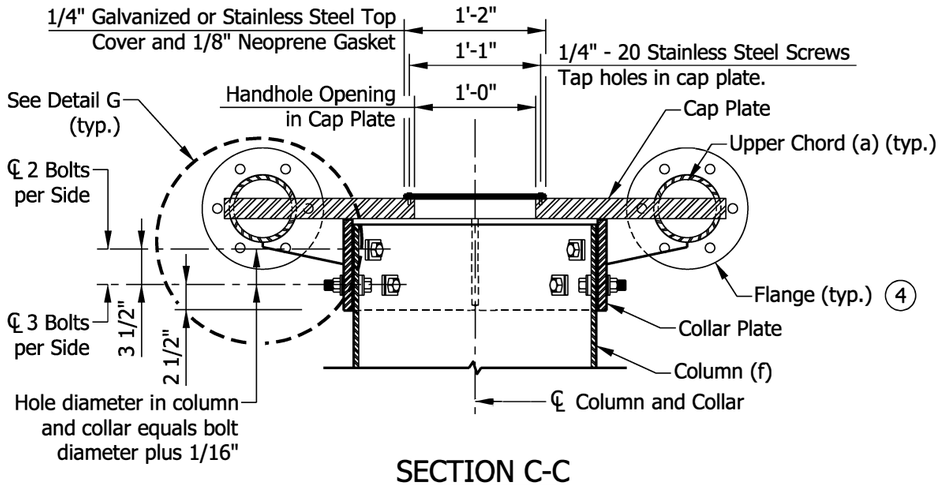

SECTION C-C

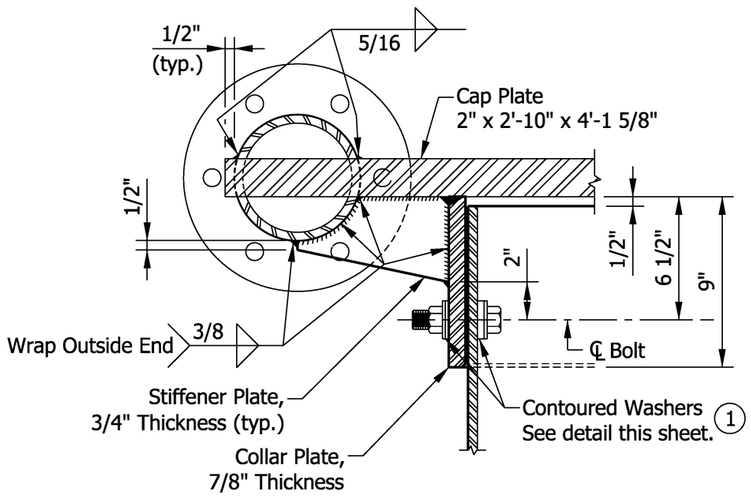

DETAIL G

INDIANA DEPARTMENT OF TRANSPORTATION

UPPER CHORDS CONNECTION DETAILS

SEPTEMBER 2025

STANDARD DRAWING NO. E 802-DBCS-04

DAVID H. BORUFF REGISTERED No. 60900348 STATE OF INDIANA PROFESSIONAL ENGINEER

David H Boruff 4/8/25

DESIGN STANDARDS ENGINEER DATE

04/16/2025

CHIEF ENGINEER DATE

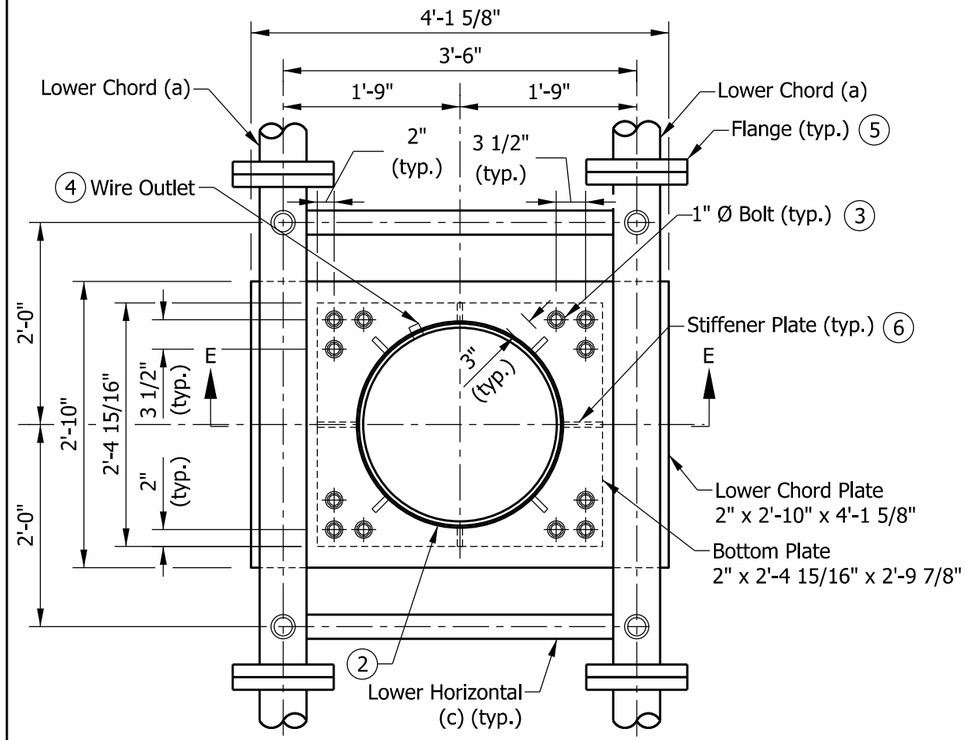

PLAN SECTION THROUGH COLUMN ABOVE LOWER CHORDS

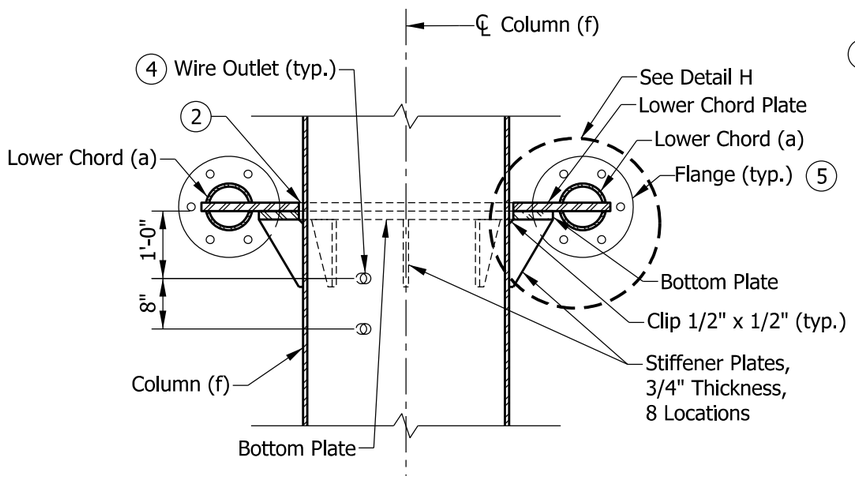

SECTION E-E

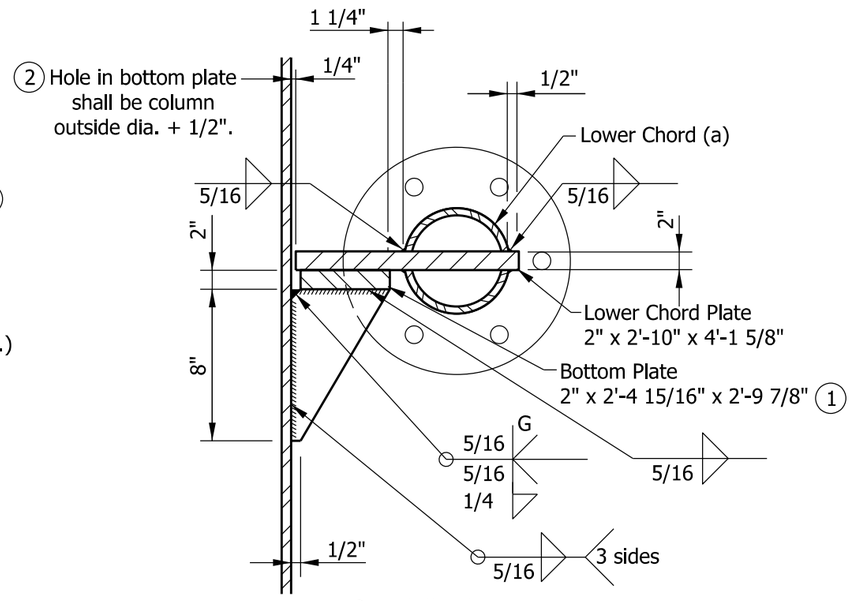

DETAIL H

NOTES:

1. Top of plate shall fully seat lower chord plate, any grinding damage of galvanizing shall be repaired before assembly.
2. After tightening lower connection bolts, gaps shall be filled with non-hardening silicone caulk suitable for exterior exposure.
3. Connection bolts in collar and bolts at lower chord connection shall be high strength with matching locknuts. Each connection bolt shall have two stainless steel flat washers.
4. Pipe shall be oriented toward DMS, see detail on Standard Drawing E 802-DBCS-13.
5. See Standard Drawing E 802-DBCS-03 for flange details.
6. Stiffeners shall be extended to edge of bottom plate, unless noted otherwise.

INDIANA DEPARTMENT OF TRANSPORTATION

LOWER CHORDS CONNECTION DETAILS

SEPTEMBER 2025

STANDARD DRAWING NO. E 802-DBCS-05

DAVID H. BORUFF
REGISTERED
No. 60900348
STATE OF INDIANA
PROFESSIONAL ENGINEER

DESIGN STANDARDS ENGINEER — DATE 4/8/25

CHIEF ENGINEER — DATE 04/16/2025

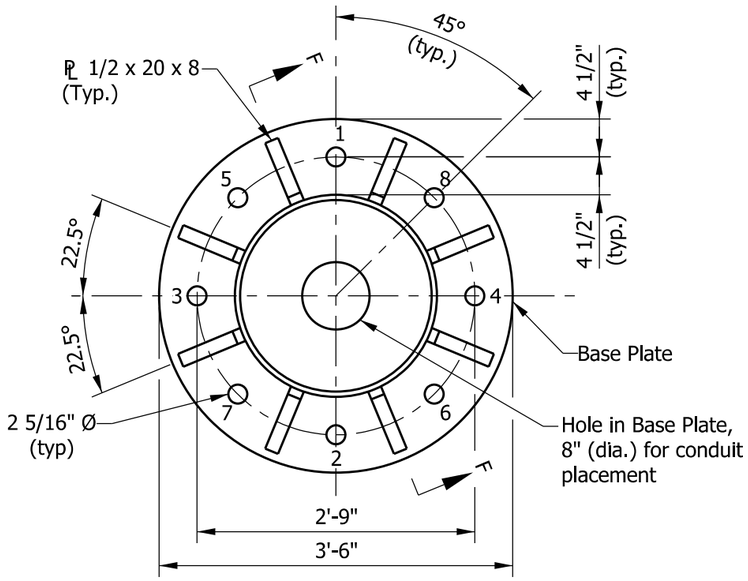

PLAN (6)

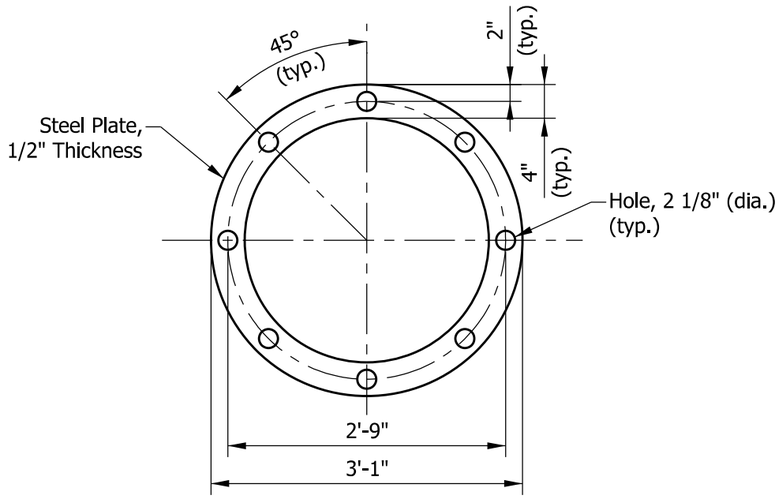

ANCHOR AND POSITIONING PLATE

NOTES:

1. Temporary positioning plate and leveling nuts or other engineer-approved methods shall be used to maintain anchor bolt alignment during concrete placement. Positioning plate and associated nuts shall be removed upon completion of the foundation.
2. Threads shall be protected during concrete placement with tape, sleeves, or other means.

(3) Minimum length of galvanizing shall be 1 ft - 6 in. Entire bolt may be galvanized at contractor's option.

(4) Uncoated nut shall be provided at bottom of anchor plate. A deformed thread or chemical thread lock shall be used to secure.

(5) Continuous backer ring shall be used, ¼ in. x 3 in. minimum. Tack welds shall be used only in the root area of final weld.

(6) Anchor bolt nuts shall be tightened in numeral order in accordance with the procedure given on Standard Drawing E 802-SBTS-17.

(7) UT - Ultrasonic Testing, 25% of entire column to base plate weld. MT - Magnetic Particle Testing, 25% or 1 side of 4 stiffeners.

(8) The clear distance between the concrete surface and the bottom of the leveling nut shall be equal to or less than one anchor bolt diameter. The threads of the anchor bolts shall be Unified National Coarse (U.N.C.).

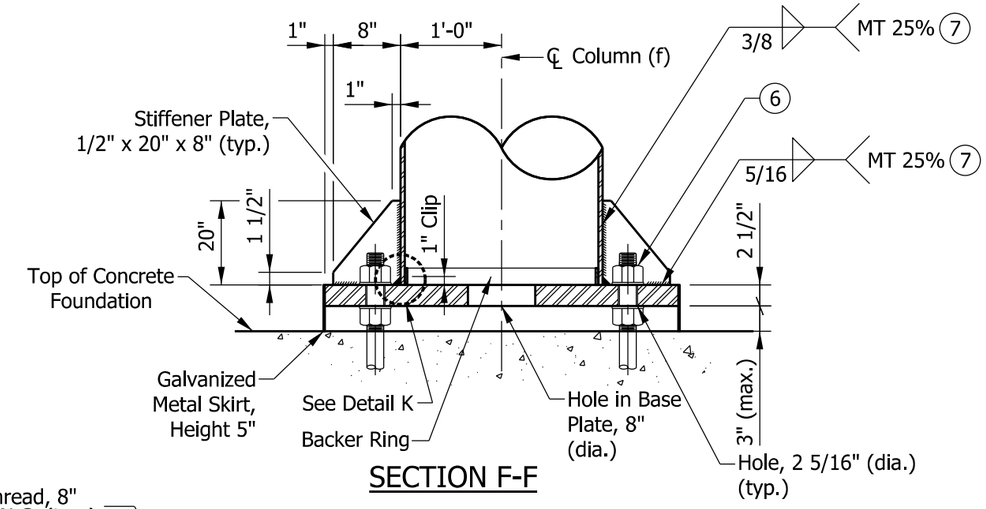

SECTION F-F

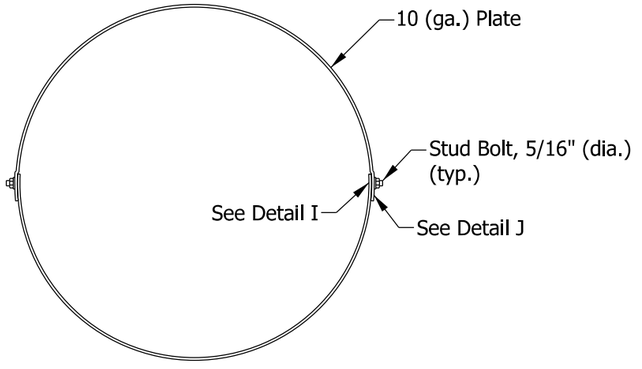

METAL SKIRT DETAIL

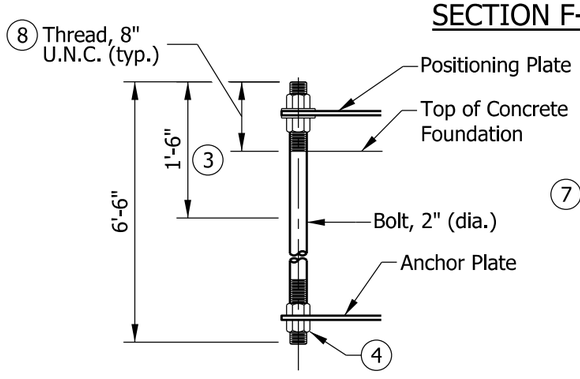

ANCHOR BOLT DETAIL

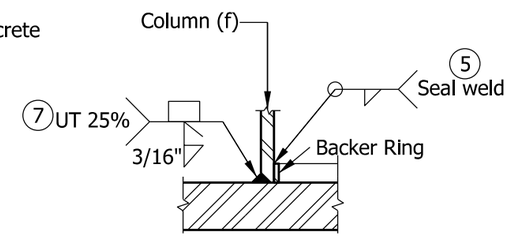

DETAIL K
BASE PLATE WELD

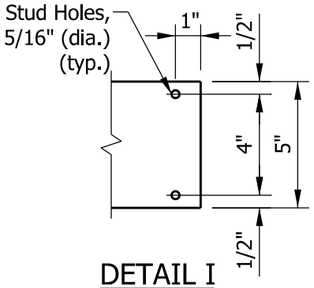

DETAIL I

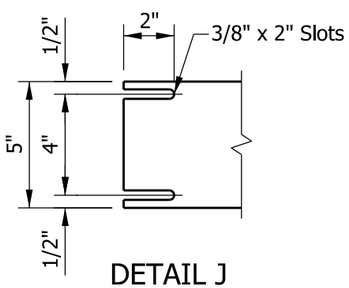

DETAIL J

INDIANA DEPARTMENT OF TRANSPORTATION

BASE PLATE, ANCHOR BOLT, AND METAL SKIRT DETAILS

SEPTEMBER 2025

STANDARD DRAWING NO. E 802-DBCS-06

DAVID H. BORUFF
REGISTERED
No.
60900348
STATE OF
INDIANA
PROFESSIONAL ENGINEER

David H Boruff 4/8/25
DESIGN STANDARDS ENGINEER DATE

04/16/2025
CHIEF ENGINEER DATE

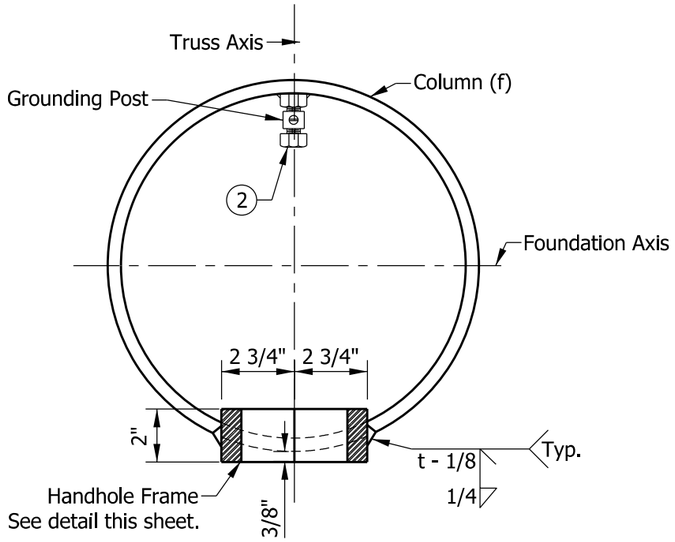

PLAN

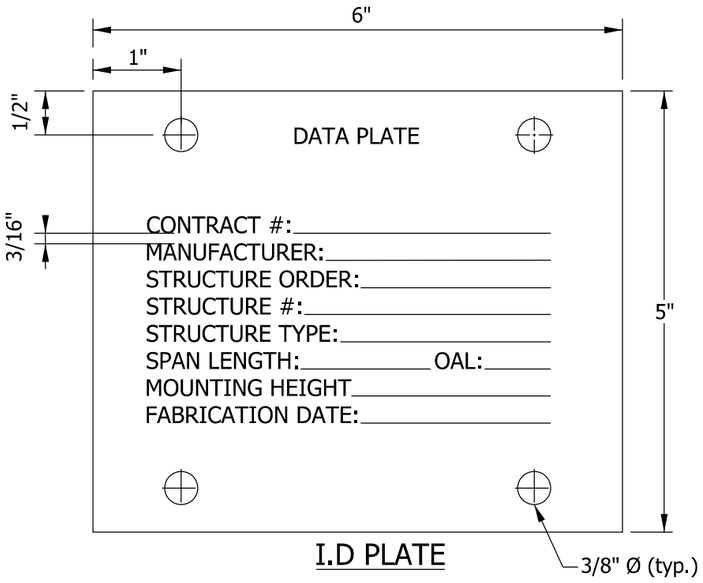

I.D PLATE

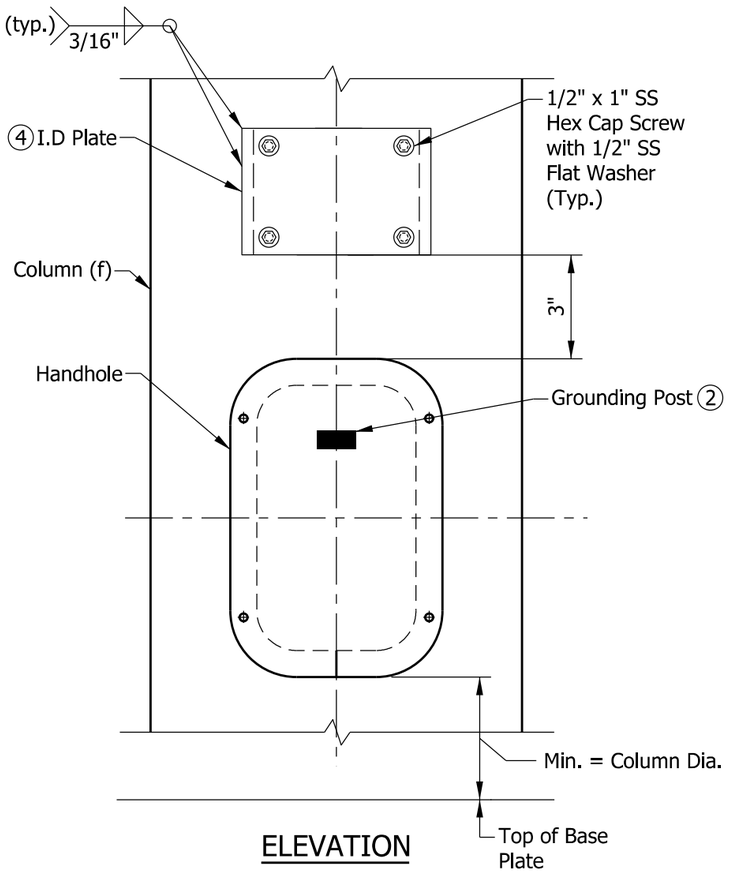

ELEVATION

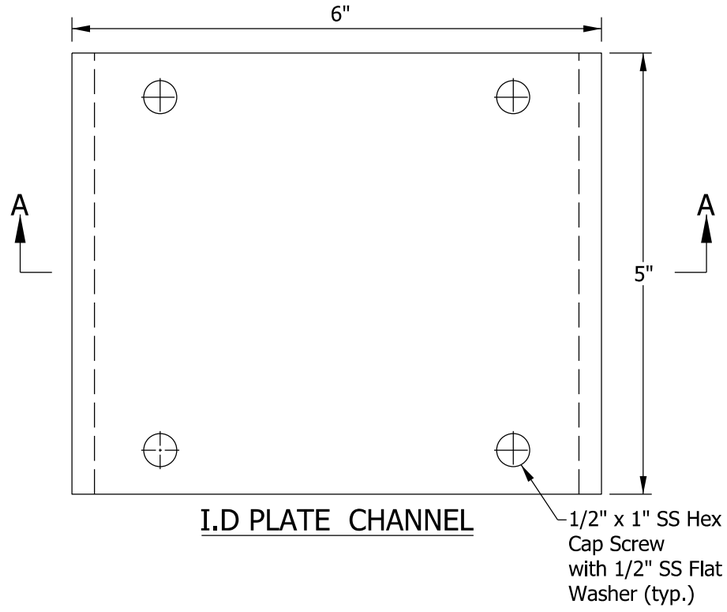

I.D PLATE CHANNEL

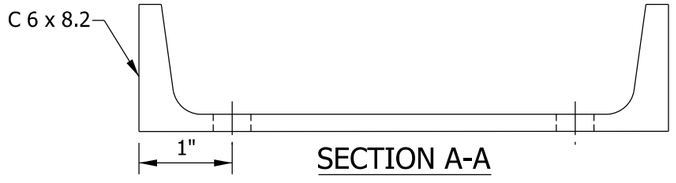

SECTION A-A

NOTES:

1. In lieu of fabricated handhole frame as shown, frame may be cut from 2 in. plate with rolling direction vertical.
2. See Standard Drawing E 802-SNWR-03 for grounding post details. Grounding post shall be placed on far side of support directly opposite center of handhole.
3. See Standard Drawing E 802-DBCS-02 for handhole location.
4. I.D. plate shall be a ⅛ in. stainless steel plate with stamped in 3/16 in. black letters.

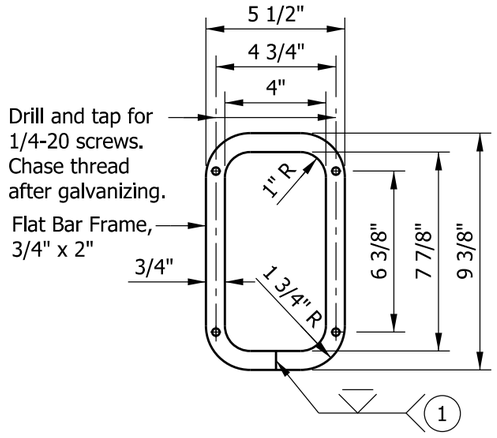

HANDHOLE FRAME

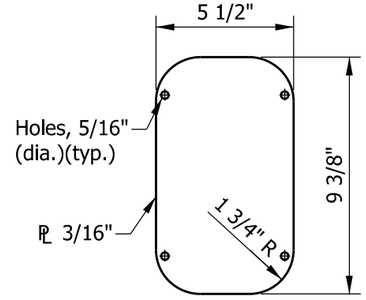

HANDHOLE COVER

INDIANA DEPARTMENT OF TRANSPORTATION	
HANDHOLE AND I.D. TAG DETAILS SEPTEMBER 2025	
STANDARD DRAWING NO.	E 802-DBCS-07

DAVID H. BORUFF REGISTERED No. 60900348 STATE OF INDIANA PROFESSIONAL ENGINEER

David H Boruff 4/8/25
DESIGN STANDARDS ENGINEER DATE

04/16/2025
CHIEF ENGINEER DATE

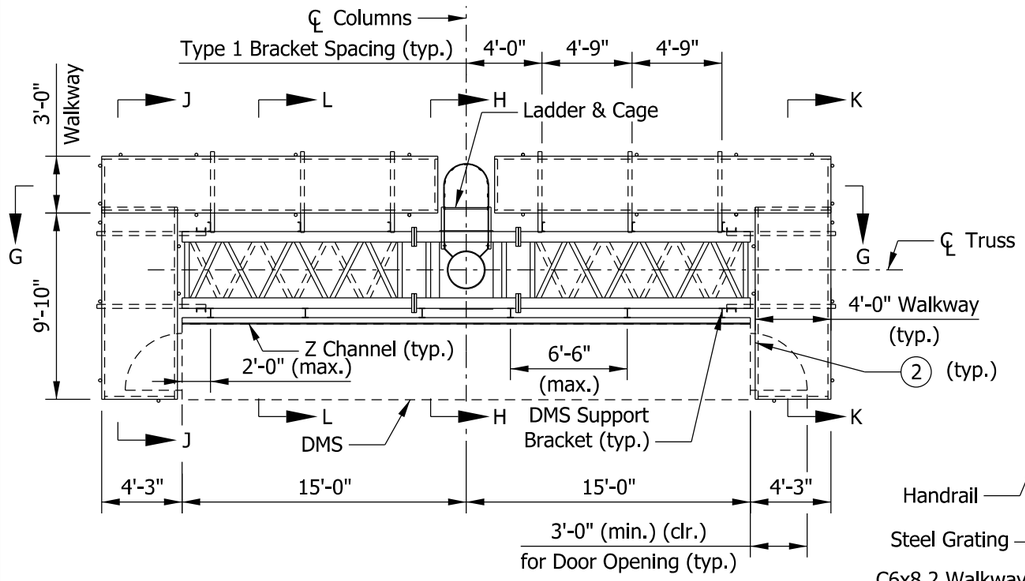

PLAN

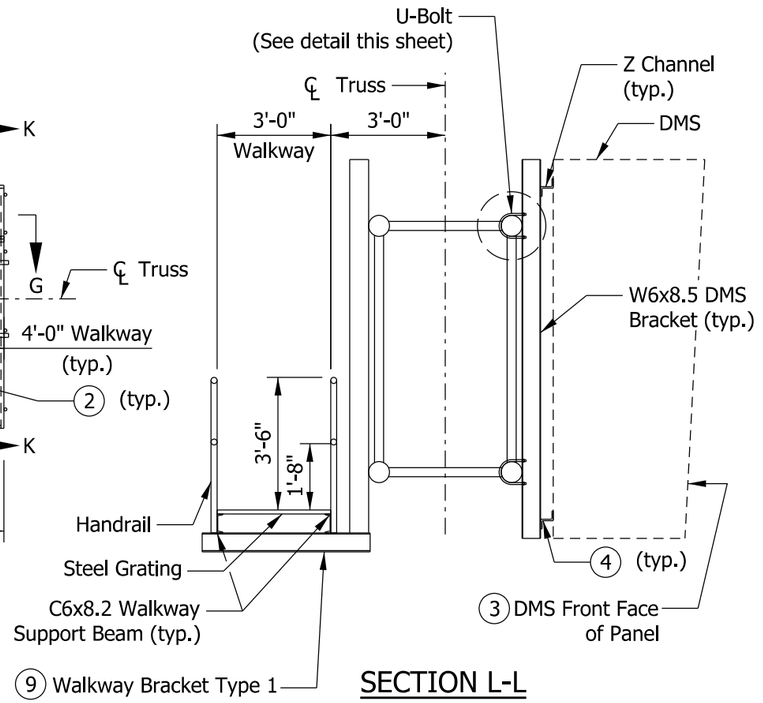

SECTION L-L

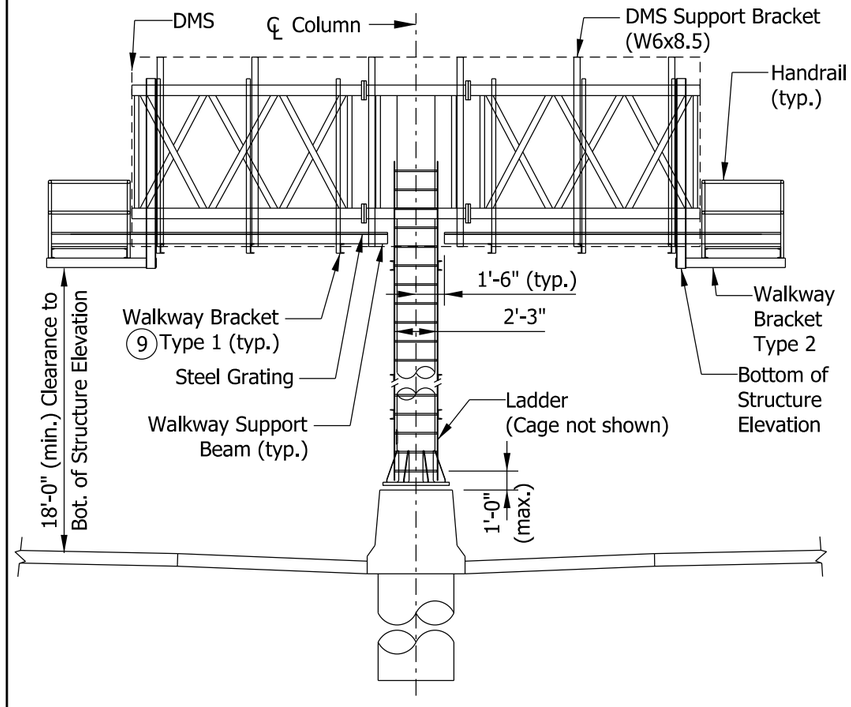

SECTION G-G

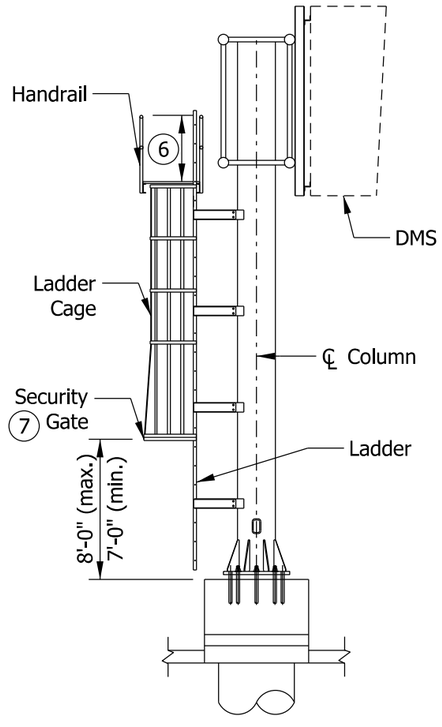

SECTION H-H

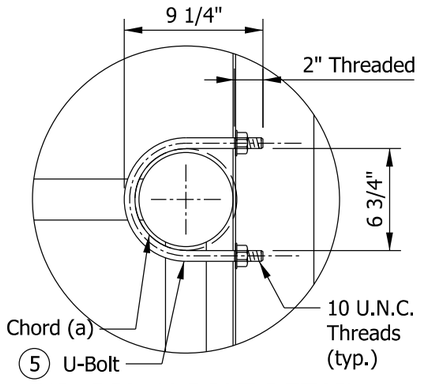

5/8" DIA. U-BOLT DETAIL

NOTES:

1. Walkway gratings shall consist of galvanized steel 19W4 - 1 1/4 in. x 3/16 in. bar grating. Crossbar shall have a maximum gap of 4 in. Moment of inertia Ix = 0.308 in 4ft. A different grating of equal strength may be used upon approval. Attachment shall be clip type or welded to supports per manufacturer's recommendations.

(2) The Contractor shall coordinate with the sign manufacturer so floor inside DMS is 3 in. max up or down to the side of grating. The bottom of the DMS door shall open without obstruction from the grating.

(3) The front face of the DMS shall be tilted at 3° toward approaching traffic. If the DMS is not built with the front face tilted appropriately, a block shall be placed on the top of the back face to obtain the 3° tilt.

(4) One ASTM F3125 Grade A325 bolt ½ in. x 2 in. on each side of the W6x8.5 steel bracket web with one flat washer and one lock nut.

(5) ASTM A449 or A193 Grade B8 U-Bolts. two flat washers, two lock washers, and two lock nuts per U-bolt; 4 required per DMS bracket.

(6) Ladder shall extend 3 ft-6 in. minimum above top of grating.

(7) See Standard Drawing E 802-DBCS-12 for security gate details.

8. See Standard Drawing E 802-DBCS-09 for Section J-J and K-K.

(9) Maximum walkway support bracket spacing shall be 4'-9".

INDIANA DEPARTMENT OF TRANSPORTATION

ACCESS DETAILS

SEPTEMBER 2025

STANDARD DRAWING NO. E 802-DBCS-08

DAVID H. BORUFF REGISTERED No. 60900348 STATE OF INDIANA PROFESSIONAL ENGINEER

David H Boruff 4/8/25

DESIGN STANDARDS ENGINEER DATE

04/16/2025

CHIEF ENGINEER DATE

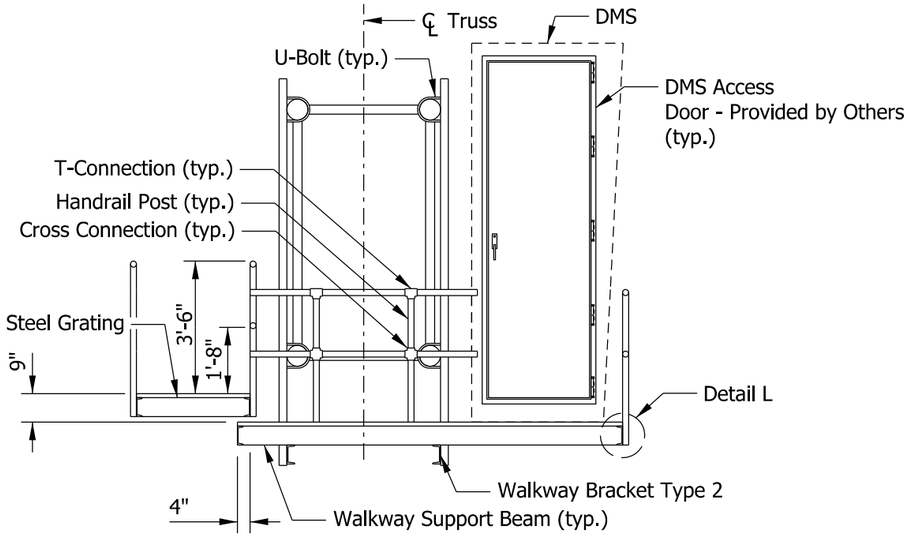

SECTION J-J

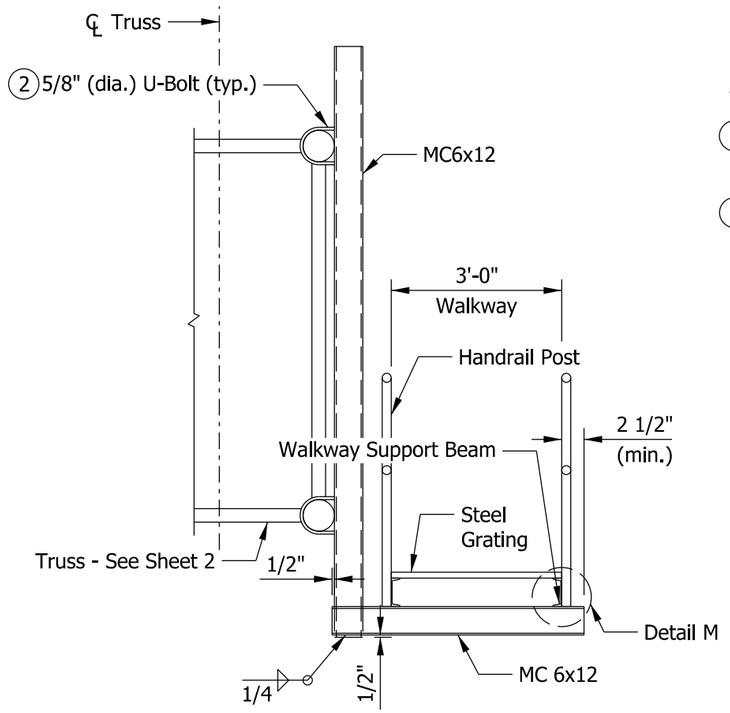

TYPE 1 BRACKET DETAIL

NOTES:

1. Two ⅝ in. diameter ASTM F3125 Grade A325 bolts with one flat washer and one lock nut each shall be provided per connection
2. Two flat washers, two lock washers, and two lock nuts are required per U-bolt. Two U-Bolts are required per Type 1 bracket; 4 required per Type 2 bracket. See U-bolt detail on Standard Drawing E 802-DBCS-08.
3. Walkway members shall be ASTM A36 and the handrail supports shall be ASTM A53 Grade B.

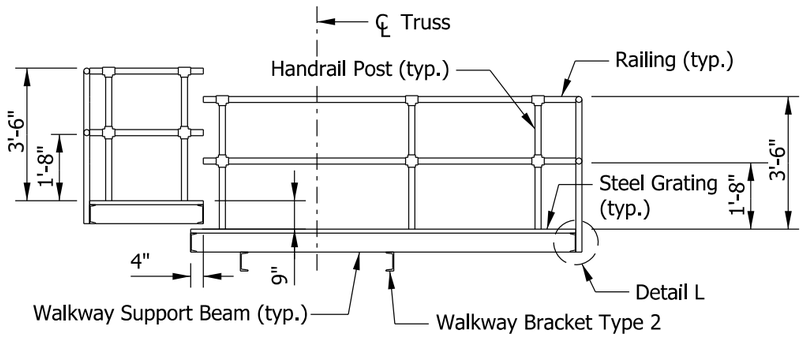

SECTION K-K

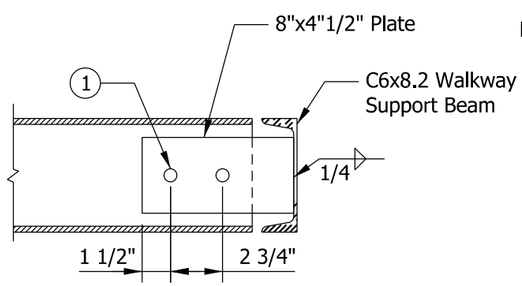

DETAIL L

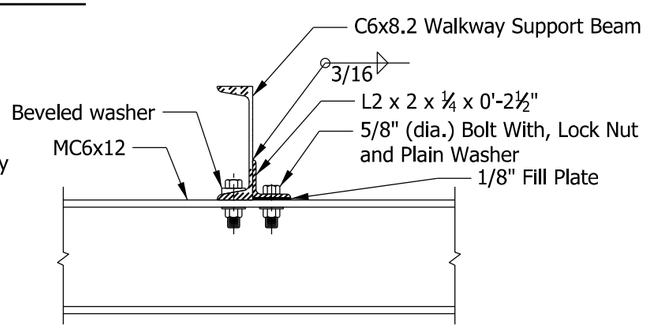

DETAIL U

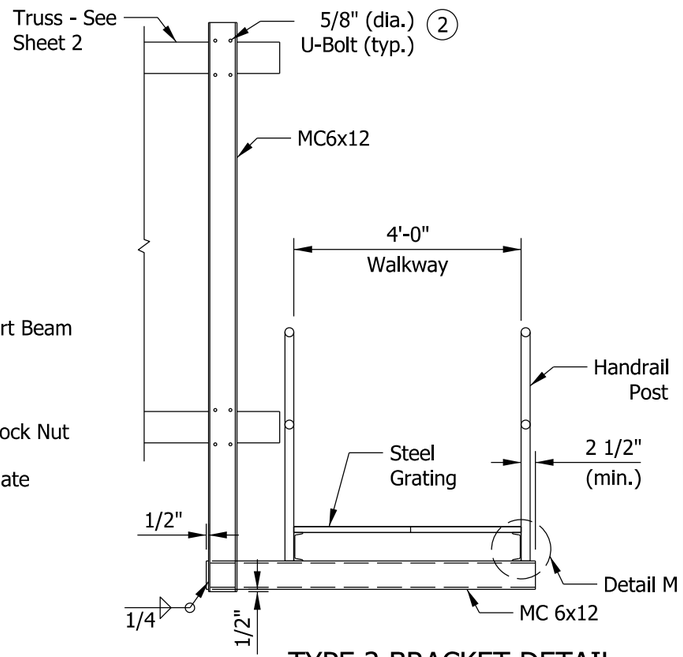

TYPE 2 BRACKET DETAIL

INDIANA DEPARTMENT OF TRANSPORTATION

WALKWAY DETAILS

SEPTEMBER 2025

STANDARD DRAWING NO. E 802-DBCS-09

DAVID H. BORUFF REGISTERED No. 60900348 STATE OF INDIANA PROFESSIONAL ENGINEER

David H Boruff 4/8/25

DESIGN STANDARDS ENGINEER DATE

04/16/2025

CHIEF ENGINEER DATE

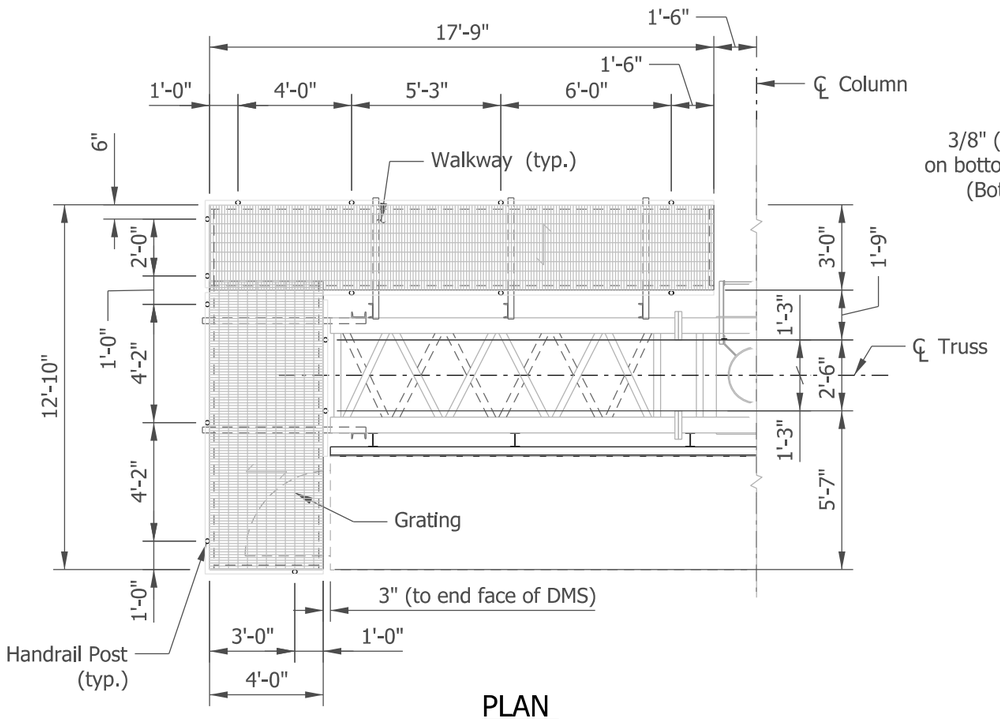

PLAN

(Showing half of Structure, other Half Similar, Mirror)

⇆ Indicates span direction of grating

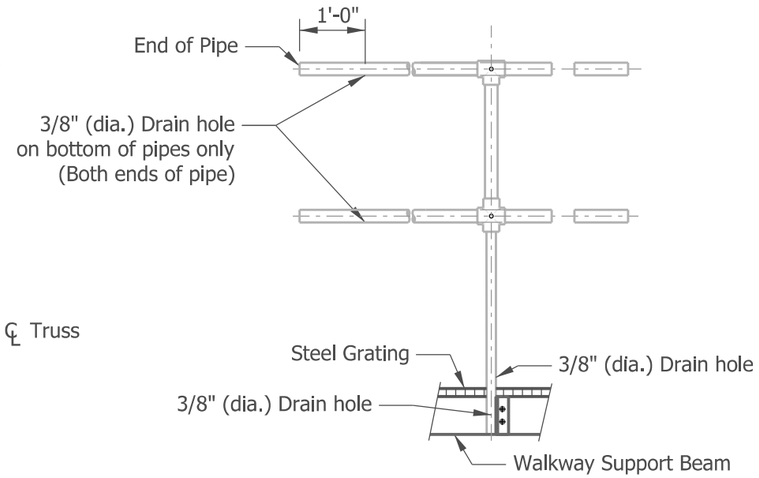

HANDRAIL DRAIN HOLES DETAIL-TYPICAL

NOTES:

1. Horizontal rail member shall be continuous through fitting. Manufacturer shall provide 7/16 in. holes for fitting 3/8 in. bolt. 7/16 in. hole shall be field drilled in horizontal rail member and handrail attached with 3/8 in. through bolt with washer and locknut.

2. Two 5/8 in. diameter F3125 Grade A325 bolts with one flat washer and one lock nut each shall be provided per connection.

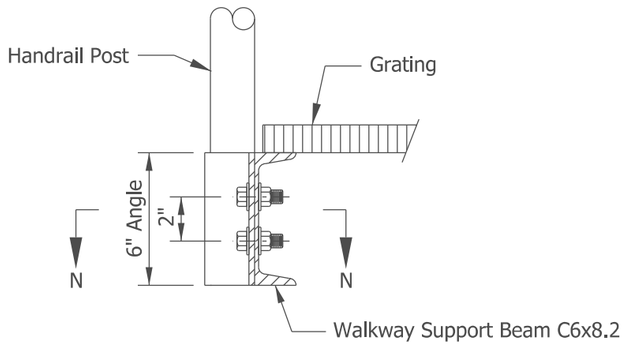

SECTION M-M

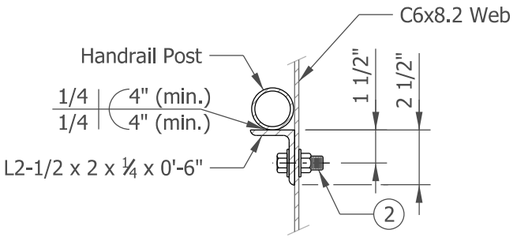

SECTION N-N

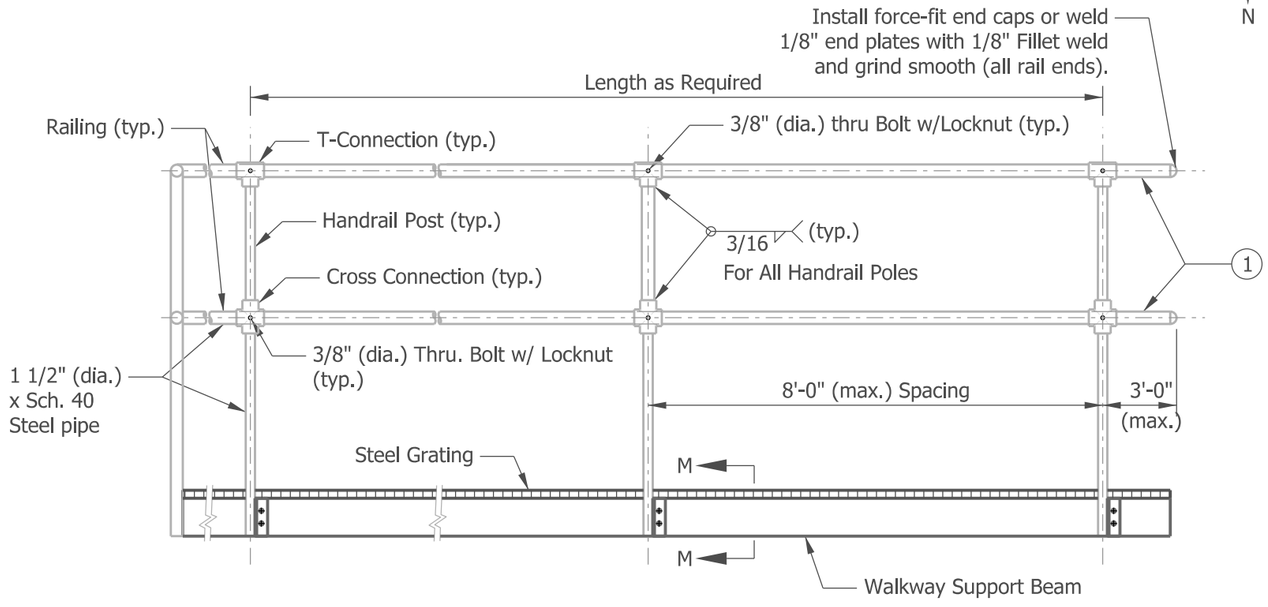

ELEVATION

INDIANA DEPARTMENT OF TRANSPORTATION

HANDRAIL DETAILS

SEPTEMBER 2025

STANDARD DRAWING NO. E 802-DBCS-10

DAVID H. BORUFF
REGISTERED
No. 60900348
STATE OF INDIANA
PROFESSIONAL ENGINEER

David H Boruff 4/8/25
DESIGN STANDARDS ENGINEER DATE

04/16/2025
CHIEF ENGINEER DATE

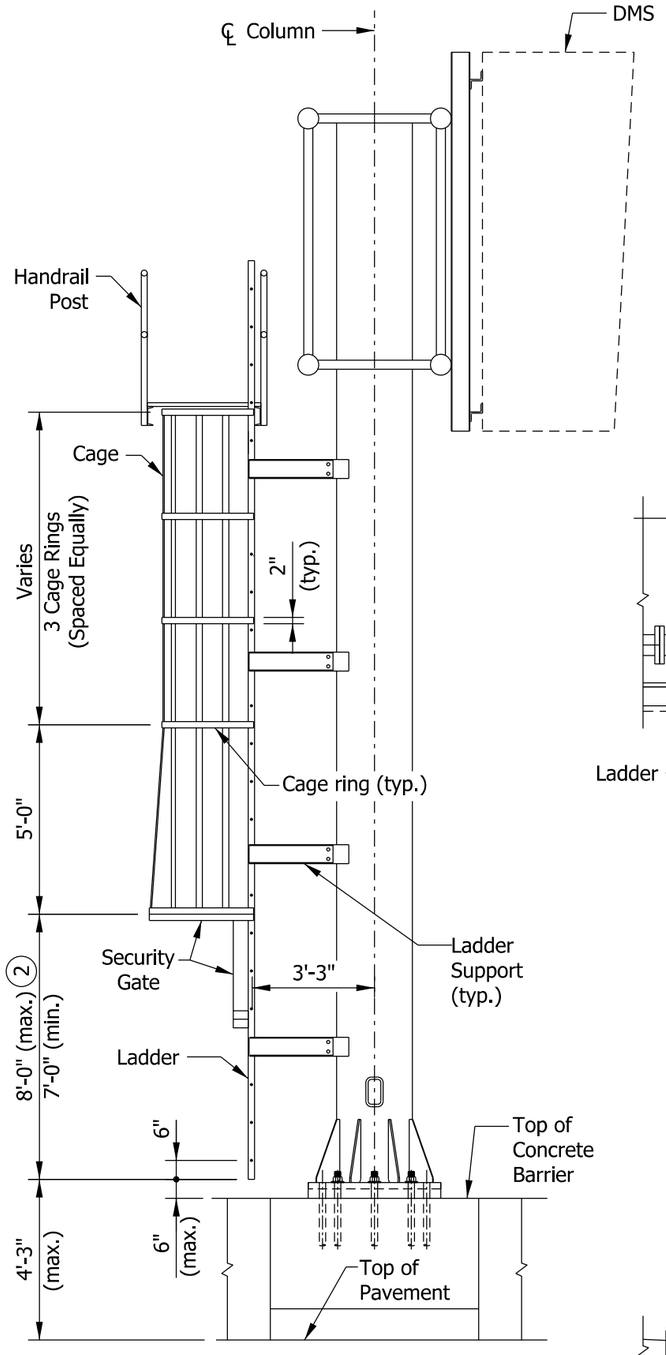

SIDE VIEW AT BARRIER

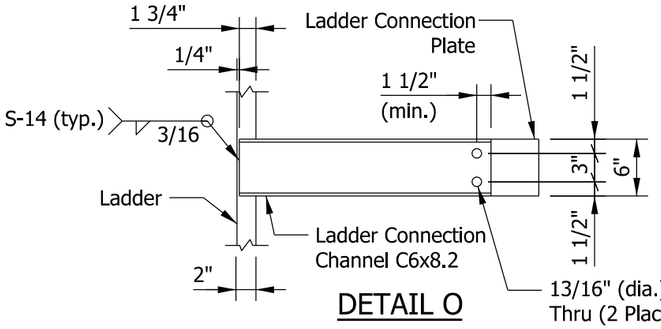

DETAIL O

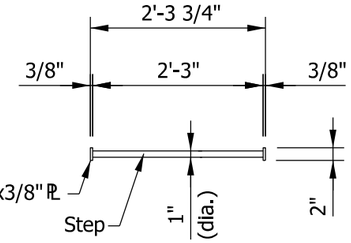

TOP VIEW OF LADDER

NOTES:

1. Two ¾ in. diameter ASTM F3125 grade A325 bolts with one flat washer and one lock nut each shall be provided for each connection.
2. For the concrete barrier installations the elevation of the bottom of the ladder shall be a maximum of 6 in. above the top of concrete barrier. The cage shall be extended to maintain the 7 ft - 0 in. minimum clearance from end of ladder.
3. For the roadside drilled shaft foundation installations the elevation of the bottom of the ladder shall be a maximum of 6 in. above the ground. The cage shall be extended to maintain the 7 ft - 0 in. minimum clearance from end of ladder.

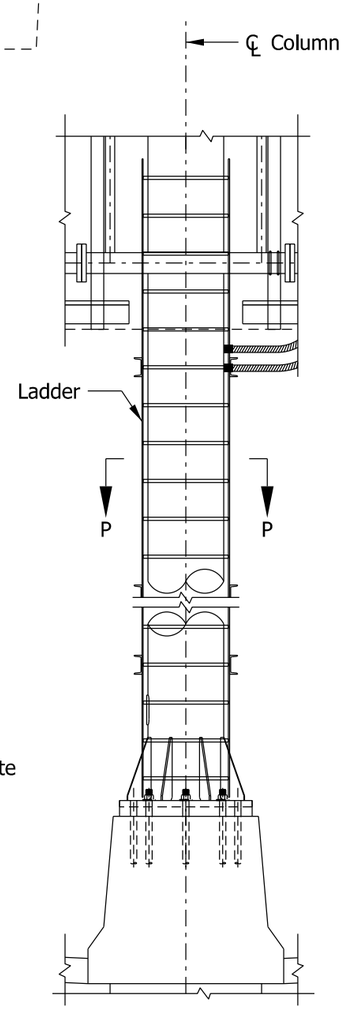

FRONT VIEW OF LADDER

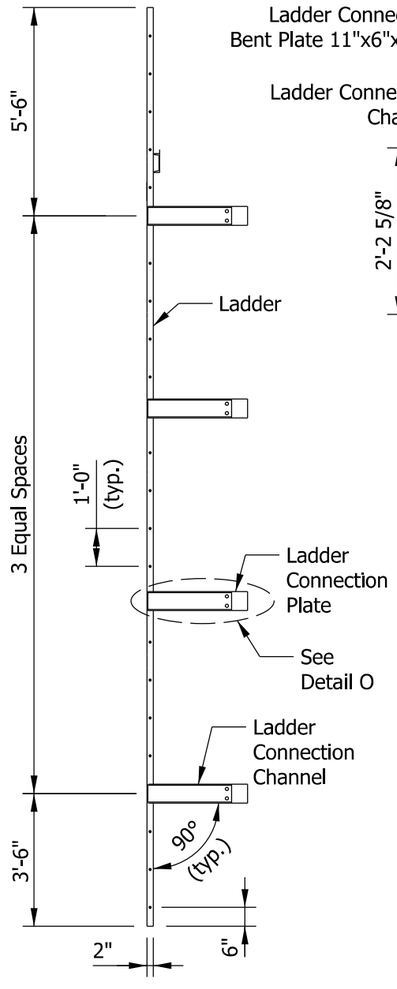

SIDE VIEW OF LADDER

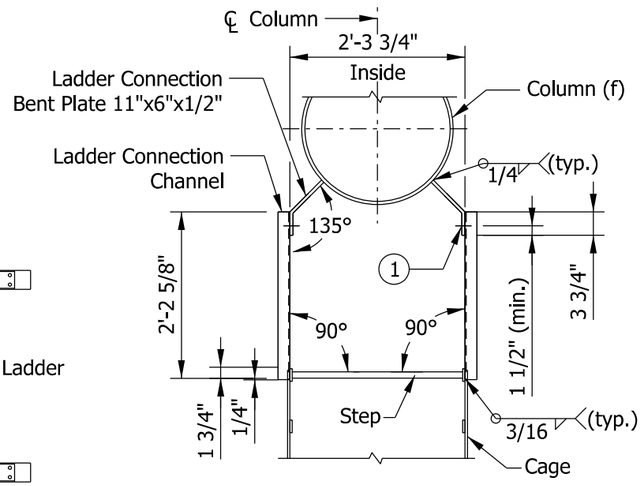

SECTION P-P

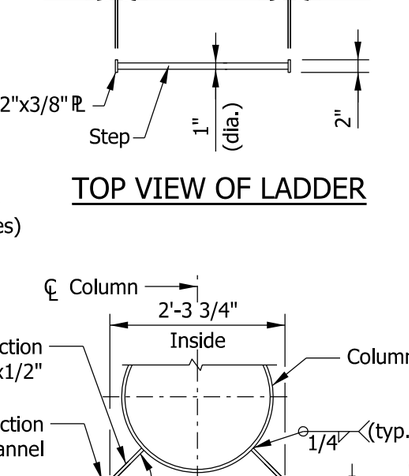

SIDE VIEW AT DRILL SHAFT

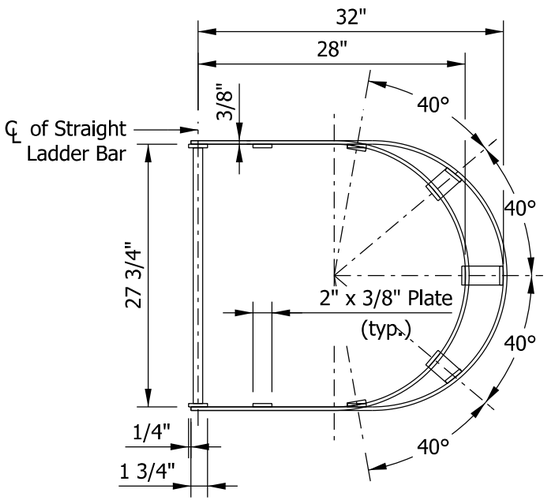

TOP VIEW OF LADDER AND CAGE

INDIANA DEPARTMENT OF TRANSPORTATION

LADDER DETAILS

SEPTEMBER 2025

STANDARD DRAWING NO. E 802-DBCS-11

DAVID H. BORUFF REGISTERED No. 60900348 STATE OF INDIANA PROFESSIONAL ENGINEER

David H Boruff 4/8/25

DESIGN STANDARDS ENGINEER DATE

04/16/2025

CHIEF ENGINEER DATE

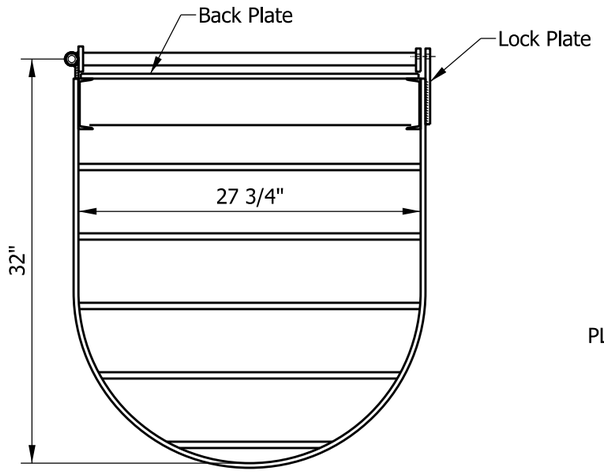

TOP VIEW

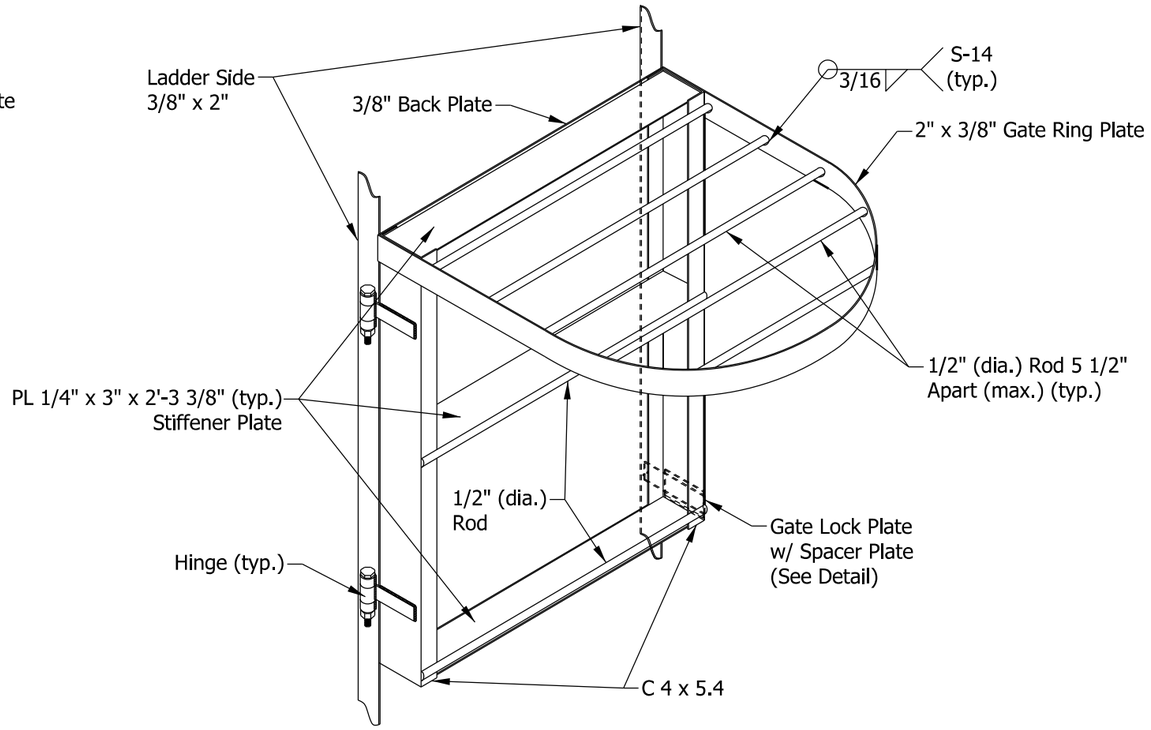

SECURITY GATE

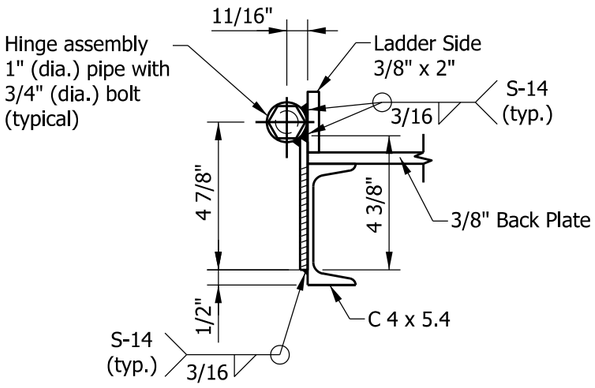

HINGE DETAIL

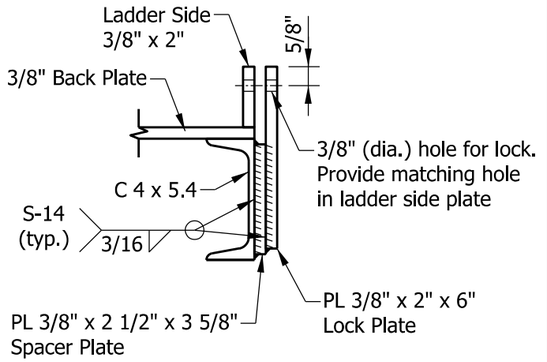

GATE LOCK DETAIL

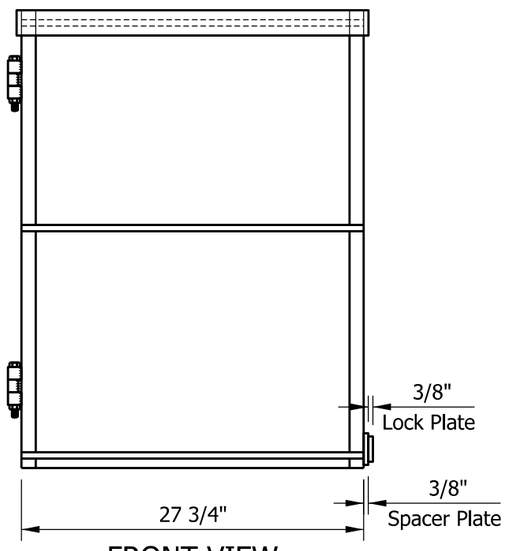

FRONT VIEW

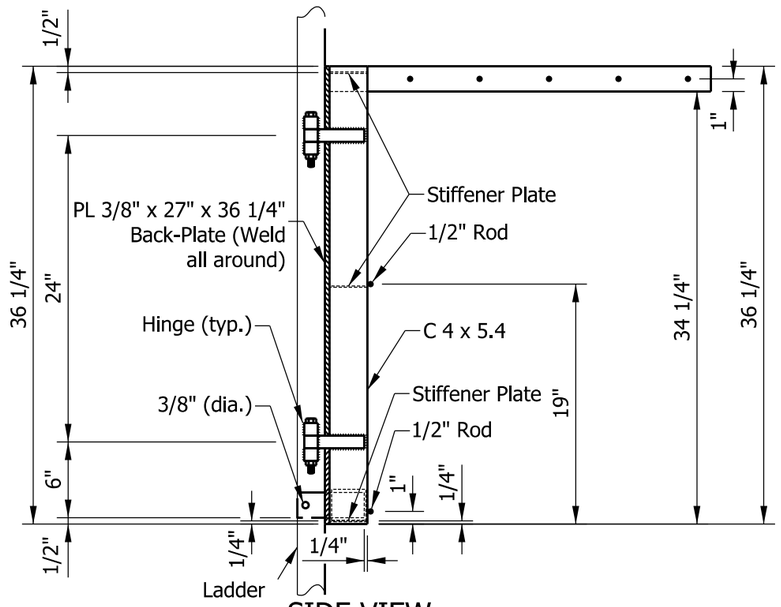

SIDE VIEW

INDIANA DEPARTMENT OF TRANSPORTATION

SECURITY GATE DETAILS

SEPTEMBER 2025

STANDARD DRAWING NO. E 802-DBCS-12

DAVID H. BORUFF REGISTERED No. 60900348 STATE OF INDIANA PROFESSIONAL ENGINEER

DESIGN STANDARDS ENGINEER — DATE: 4/8/25

CHIEF ENGINEER — DATE: 04/16/2025

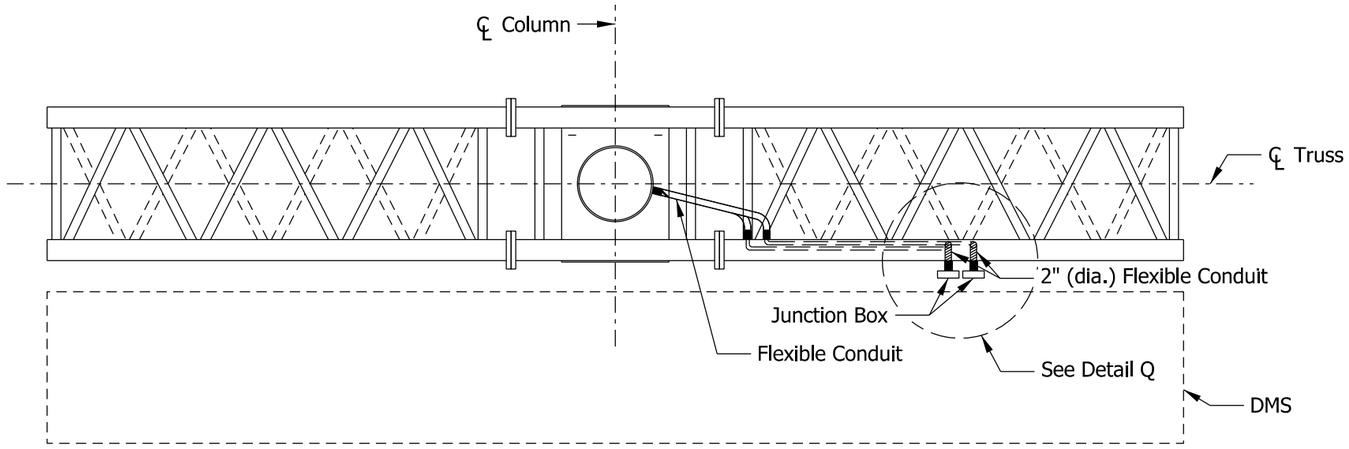

PLAN

(Ladder, Walkway and Handrail not shown for clarity)

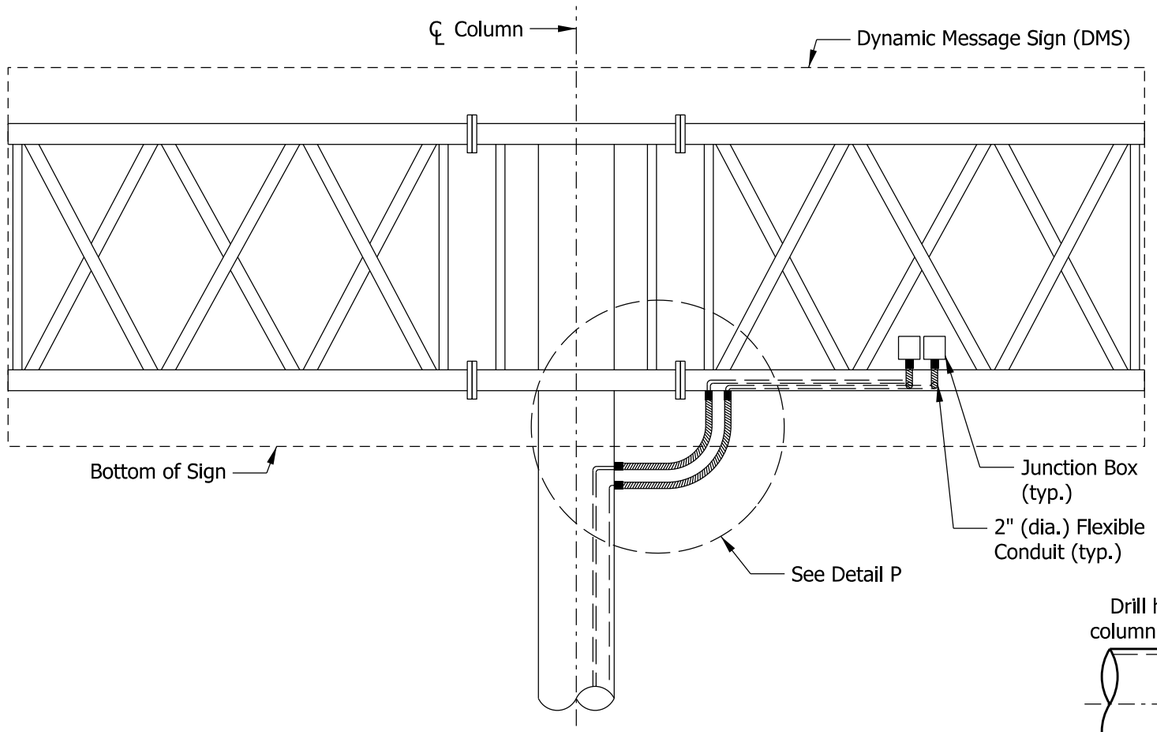

ELEVATION

(Ladder, Walkway and Handrail not shown for clarity)

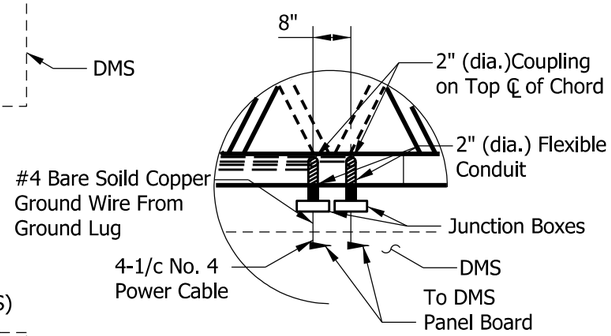

DETAIL Q

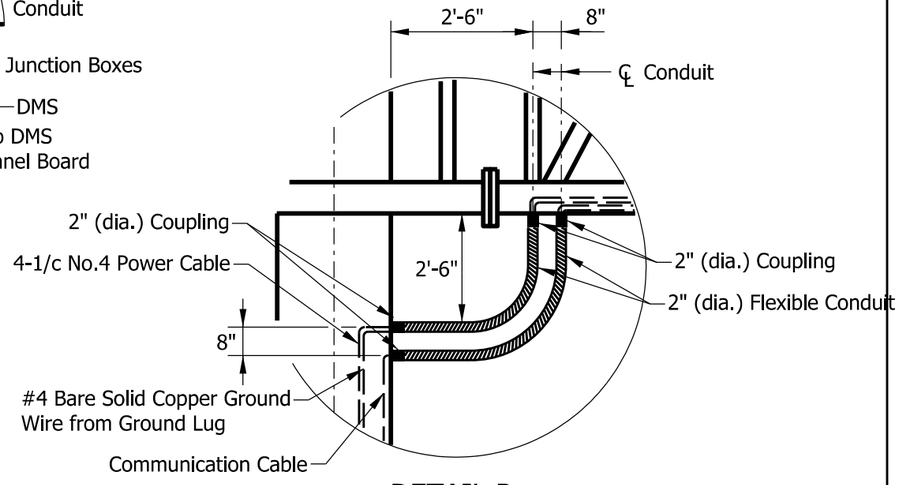

DETAIL P

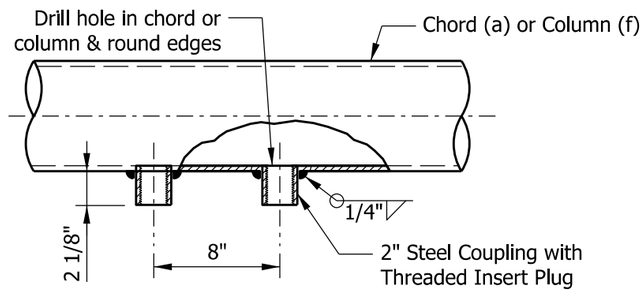

WIRE OUTLET DETAIL

NOTES:

1. Cables shall be laid out as shown or as otherwise directed.
2. The Contractor shall coordinate locations of cable access with manufacturers.
3. Wire outlets shall be steel and shall have threaded-insert plug.
4. Junction boxes shall be mounted to back of DMS.

INDIANA DEPARTMENT OF TRANSPORTATION

WIRING LAYOUT DETAILS

SEPTEMBER 2025

STANDARD DRAWING NO. E 802-DBCS-13

DAVID H. BORUFF REGISTERED No. 60900348 STATE OF INDIANA PROFESSIONAL ENGINEER

David H Boruff 4/8/25

DESIGN STANDARDS ENGINEER DATE

04/16/2025

CHIEF ENGINEER DATE

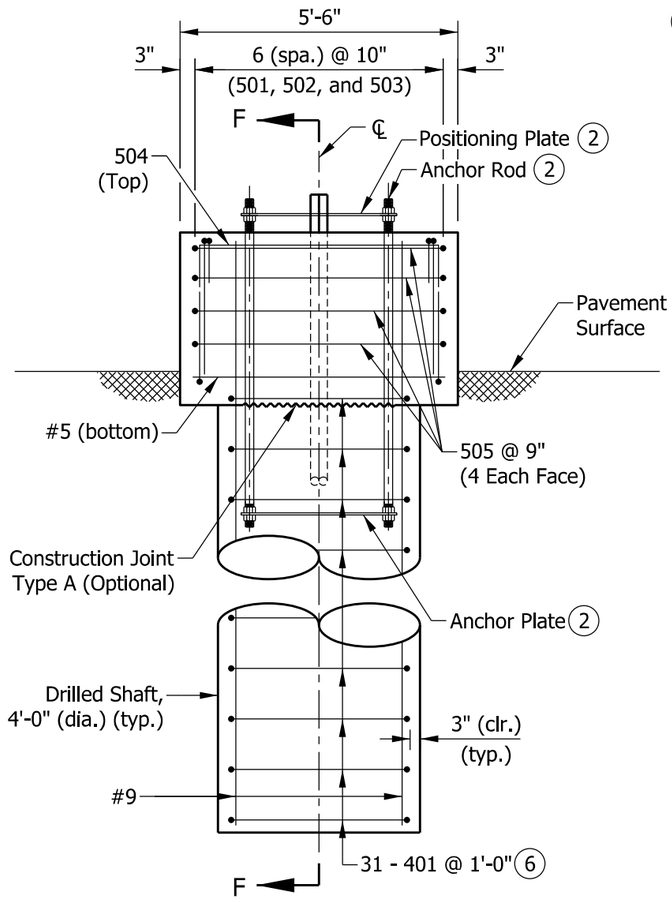

ELEVATION

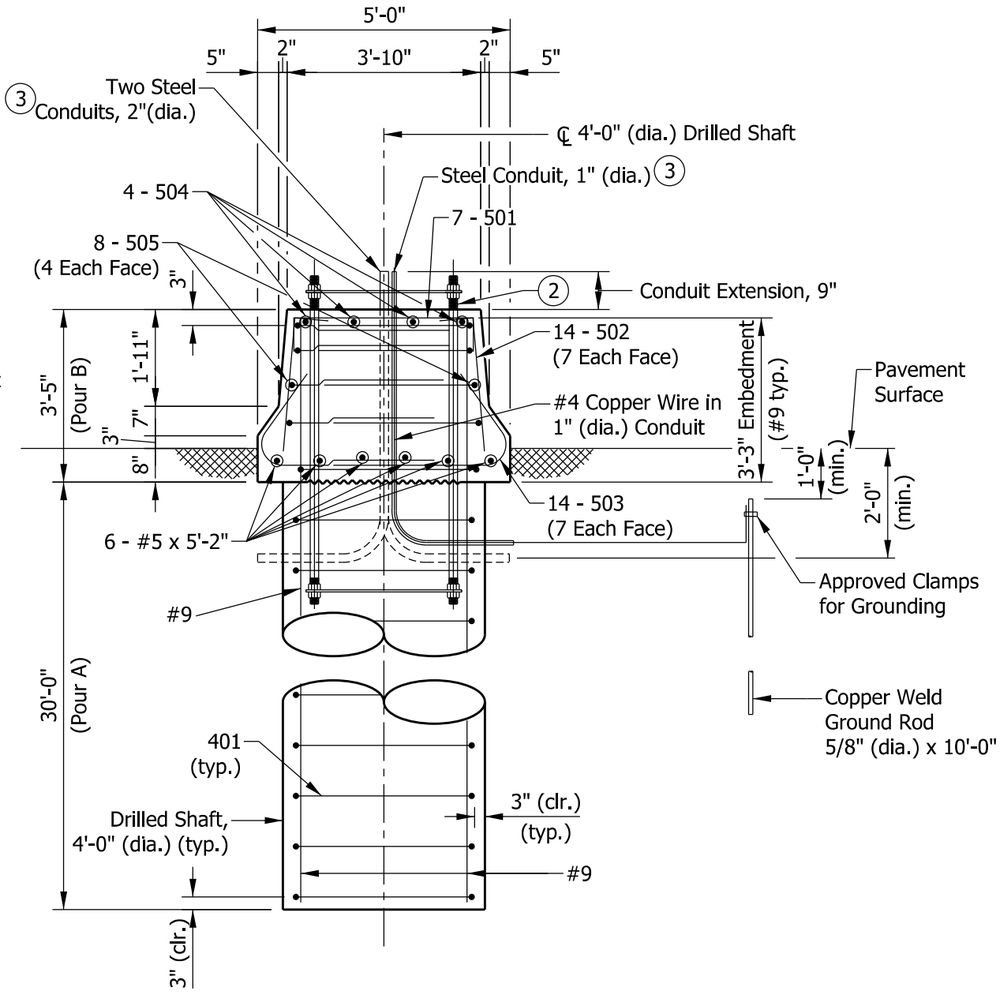

SECTION F-F

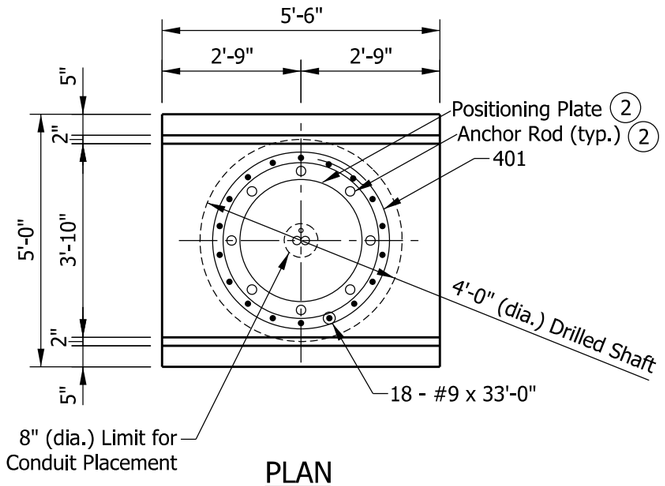

PLAN

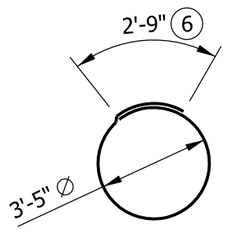

401 x 13'-8"

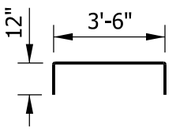

501 x 5'-6"

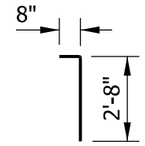

502 x 3'-4"

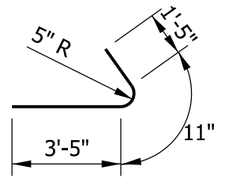

503 x 5'-9"

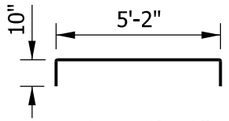

504 x 6'-10"

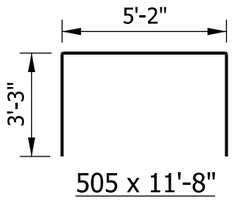

505 x 11'-8"

BILL OF MATERIALS

EPOXY-COATED REINFORCING BARS

MARK OR SIZE	NO. OF BARS	LENGTH	WEIGHT
#9	18	33'-0"	
Total #9			2020 LBS
501	7	5'-6"	40.16
502	14	3'-4"	48.67
503	14	5'-9"	83.96
504	4	6'-10"	28.59
505	8	11'-8"	97.63
#5	6	5'-2"	32.43
Total #5			331 LBS
401	31	13'-8"	
Total #4			283 LBS
Total Epoxy-Coated Reinforcing Bars			2634 LBS

CONCRETE, CLASS A

Pour A	14.0 CYS
Pour B	3.1 CYS
Total Concrete, Class A	17.1 CYS

MISCELLANEOUS

Surface Seal	6.6 SYS

NOTES:

1. See Standard Drawing E 602-CCMB-03 for barrier wall width transition.
2. See Standard Drawing E 802-DBCS-06 for anchor and positioning plate and anchor bolt details.
3. Both ends of steel conduit shall be threaded and capped.
4. Top and sides of barrier railing to the pavement surface shall be surface sealed.
5. Minimum concrete strength f'c = 3500 psi.
6. Each tie shall be rotated 90 degrees from previous tie to stagger lap locations.

INDIANA DEPARTMENT OF TRANSPORTATION

FOUNDATION AT 33" CONCRETE BARRIER

SEPTEMBER 2025

STANDARD DRAWING NO. E 802-DBCS-14

DAVID H. BORUFF
REGISTERED
No. 60900348
STATE OF INDIANA
PROFESSIONAL ENGINEER

DESIGN STANDARDS ENGINEER — DATE 4/8/25

CHIEF ENGINEER — DATE 04/15/2025

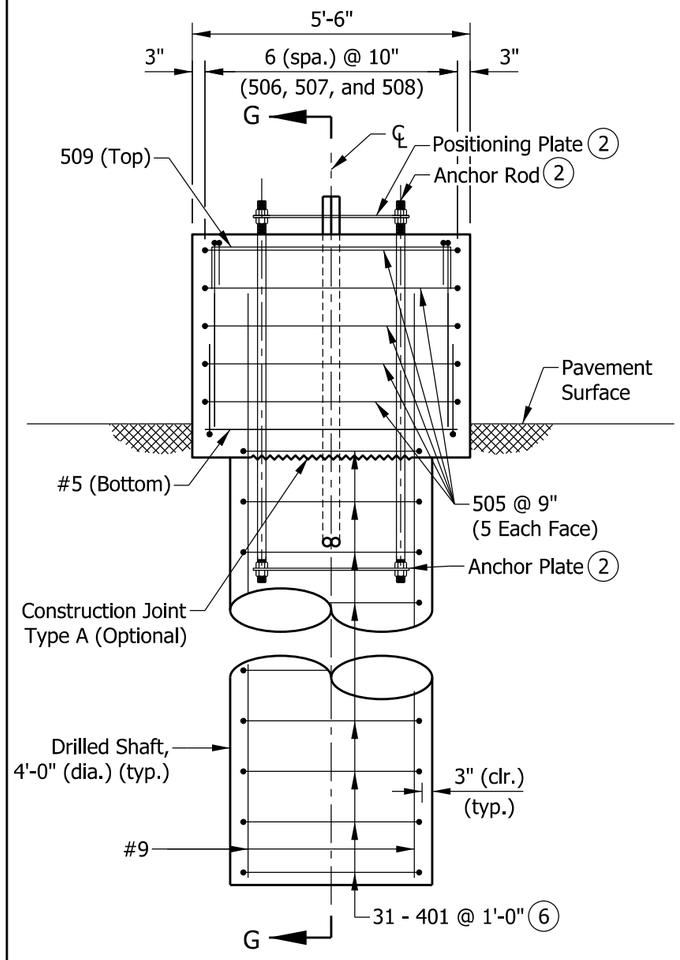

ELEVATION

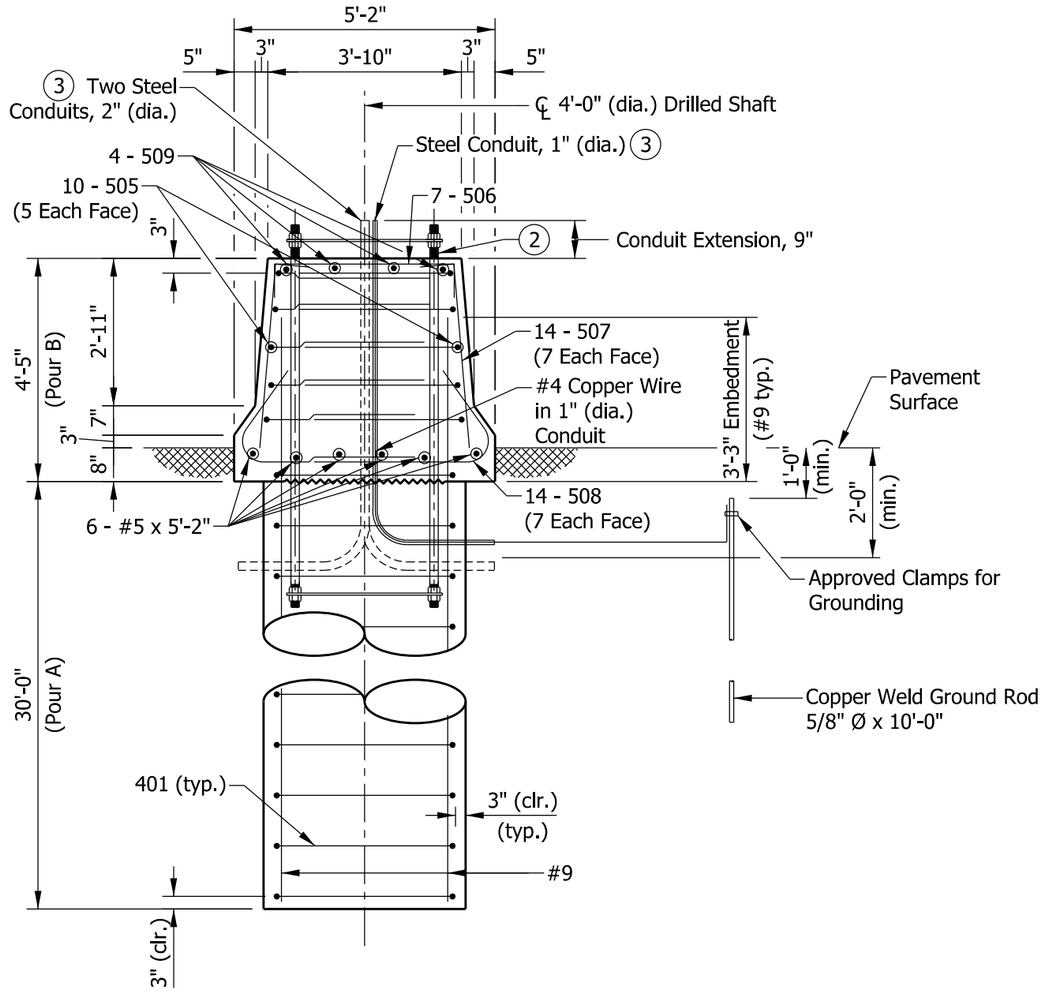

SECTION G-G

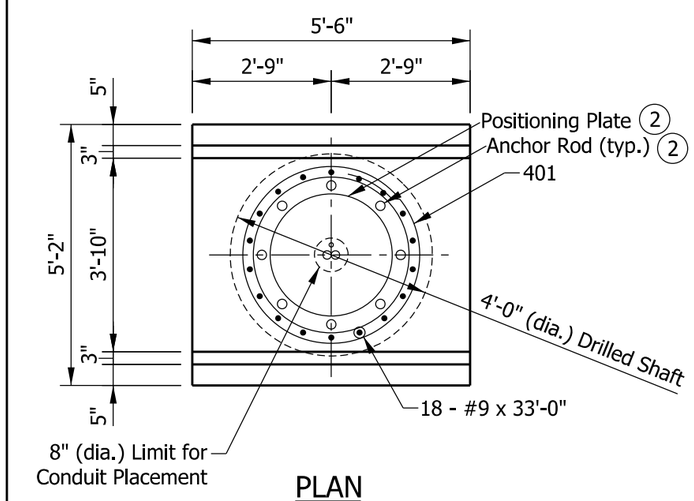

PLAN

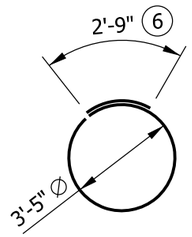

401 x 13'-8"

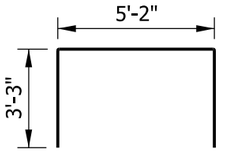

505 x 11'-8"

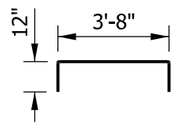

506 x 5'-8"

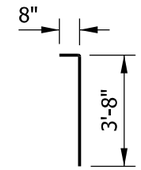

507 x 4'-4"

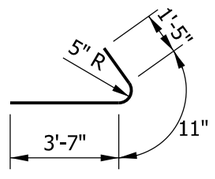

508 x 5'-11"

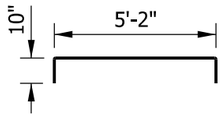

509 x 6'-10"

BILL OF MATERIALS			
EPOXY-COATED REINFORCING BARS			
MARK OR SIZE	NO. OF BARS	LENGTH	WEIGHT
#9	18	33'-0"	
Total #9			2020 LBS
505	10	11'-8"	121.68
506	7	5'-6"	41.37
507	14	4'-4"	63.46
508	14	5'-11"	86.40
509	4	6'-10"	28.51
#5	6	5'-2"	32.33
Total #5			372 LBS
401	31	13'-8"	
Total #4			283 LBS
Total Epoxy-Coated Reinforcing Bars			2675 LBS
CONCRETE, CLASS A			
Pour A			14.0 CYS
Pour B			4.0 CYS
Total Concrete, Class A			18.0 CYS
MISCELLANEOUS			
Surface Seal			7.3 SYS

NOTES:

1. See Standard Drawing E 602-CCMB-03 for barrier wall width transition.
2. See Standard Drawing E 802-DBCS-06 for anchor and positioning plate and anchor bolt details.
3. Both ends of steel conduit shall be threaded and capped.
4. Top and sides of barrier railing to the pavement surface shall be surface sealed.
5. Minimum concrete strength f'c = 3500 psi.
6. Each tie shall be rotated 90 degrees from previous tie to stagger lap locations.

INDIANA DEPARTMENT OF TRANSPORTATION

FOUNDATION AT 45" CONCRETE BARRIER

SEPTEMBER 2025

STANDARD DRAWING NO. E 802-DBCS-15

DAVID H. BORUFF REGISTERED No. 60900348 STATE OF INDIANA PROFESSIONAL ENGINEER

DESIGN STANDARDS ENGINEER — DATE 4/8/25

CHIEF ENGINEER — DATE 04/16/2025

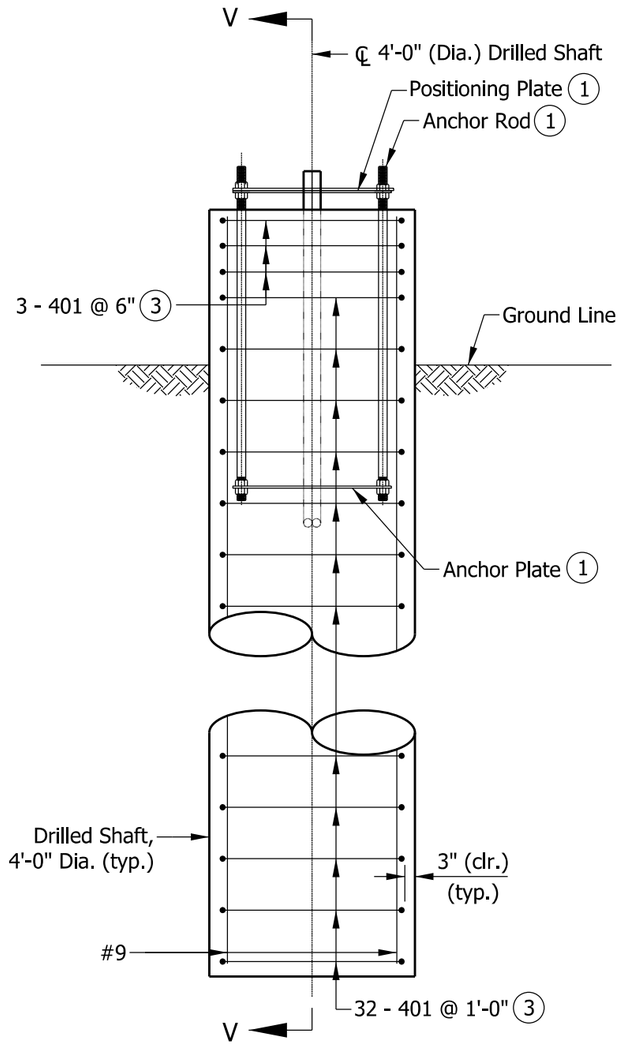

ELEVATION

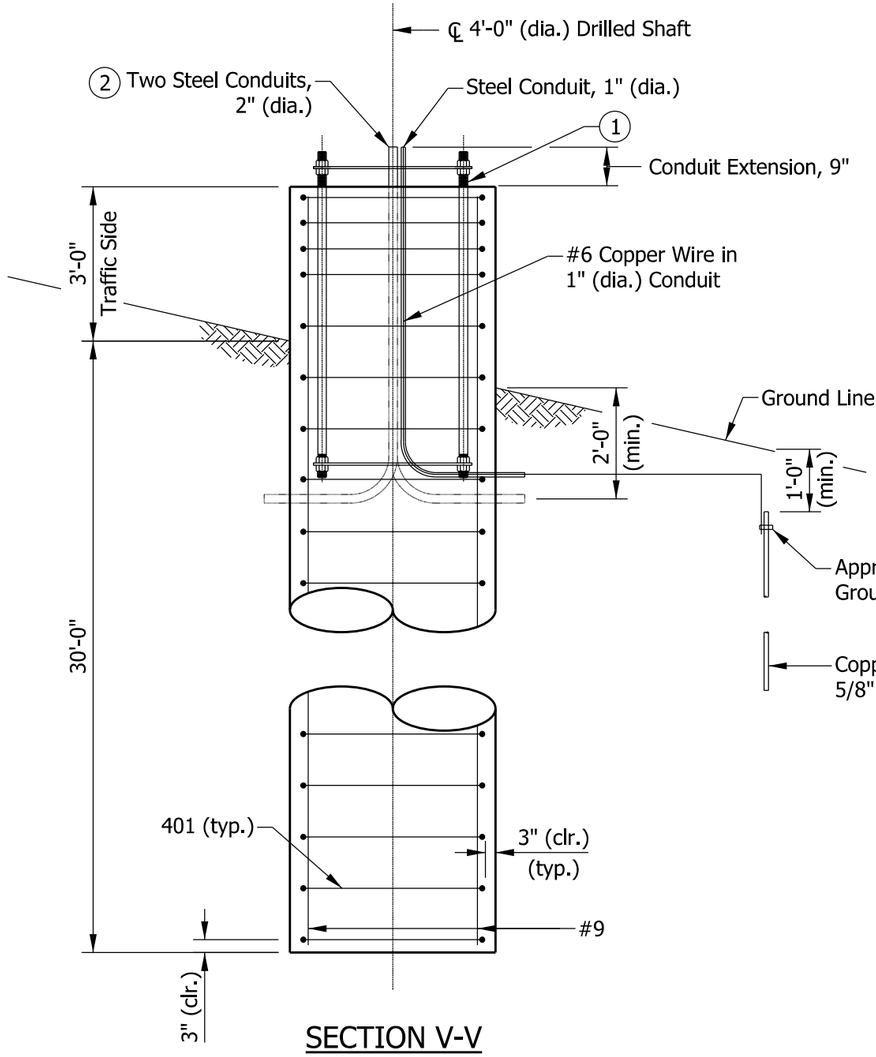

SECTION V-V

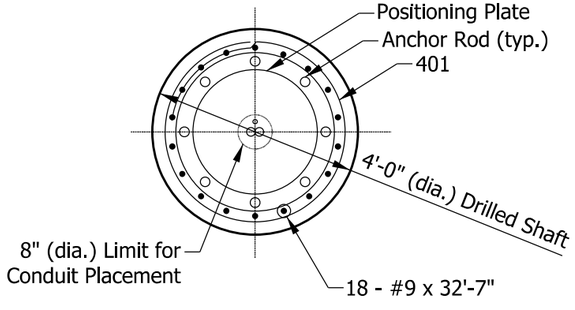

PLAN

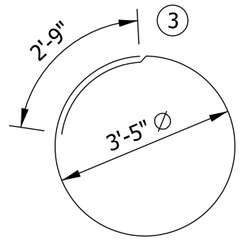

401 x 13'-8"

NOTES:

(1) See Standard Drawing E 802-DBCS-06 for anchor and positioning plate and anchor bolt details.

(2) Both ends of steel conduit shall be threaded and capped.

(3) Each tie shall be rotated 90 degrees from previous tie to stagger lap locations.

4. Top and sides of barrier railing to the pavement surface shall be surface sealed.

5. Minimum concrete strength f'c = 3500 psi.

BILL OF MATERIALS			
EPOXY-COATED REINFORCING BARS			
MARK OR SIZE	NO. OF BARS	LENGTH	WEIGHT
#9	18	32'-7"	
Total #9			1994 LBS
401	35	13'-8"	
Total #4			320 LBS
Total Epoxy-Coated Reinforcing Bars			2314 LBS
MISCELLANEOUS			
Concrete, Class A			15.4 CYS
Surface Seal			6.3 SYS

INDIANA DEPARTMENT OF TRANSPORTATION

FOUNDATION 4'-0" Ø DRILLED SHAFT

SEPTEMBER 2025

STANDARD DRAWING NO. E 802-DBCS-16

DAVID H. BORUFF REGISTERED No. 60900348 STATE OF INDIANA PROFESSIONAL ENGINEER

David H Boruff 4/8/25

DESIGN STANDARDS ENGINEER DATE

04/16/2025

CHIEF ENGINEER DATE

INDEX	
SHEET NO.	SUBJECT
1	Index
2	Plan & Elevation
3	Truss Sections, Member Size Table
4	Table of Dimensions, Spans 34' thru 81'
5	Table of Dimensions, Spans 82' thru 130' & Camber
6	Chord Connections and Weld Details
7	Flange & Chord End Plate Details
8	End Support Upper Chord Connection Details
9	End Support Lower Chord Connection Details
10	End Support Base Plate and I.D. Plate Details
11	End Support Handhole, Top Cap, and J-Hook Details
12	Anchor Plates, Anchor Bolts, and Metal Skirt Details
13	Ladder Details
14	Ladder Details
15	Security Gate Details
16	Walkway Grating Details
17	Walkway Grating Details
18	Walkway Grating Details
19	Wiring Layout Details
20	Spread Foundation at 33" Concrete Barrier Wall
21	Spread Foundation at 45" Concrete Barrier Wall
22	Spread Foundation at Median or Shoulder, 36" Height
23	Spread Foundations Quantities

INDIANA DEPARTMENT OF TRANSPORTATION

DYNAMIC MESSAGE SIGN STRUCTURE
INDEX

SEPTEMBER 2022

STANDARD DRAWING NO. E 802-DMSS-01

DAVID H. BORUFF
REGISTERED
No.
60900348
STATE OF
INDIANA
PROFESSIONAL ENGINEER

David H Boruff 05/17/22
DESIGN STANDARDS ENGINEER DATE

06/28/2022
CHIEF ENGINEER DATE

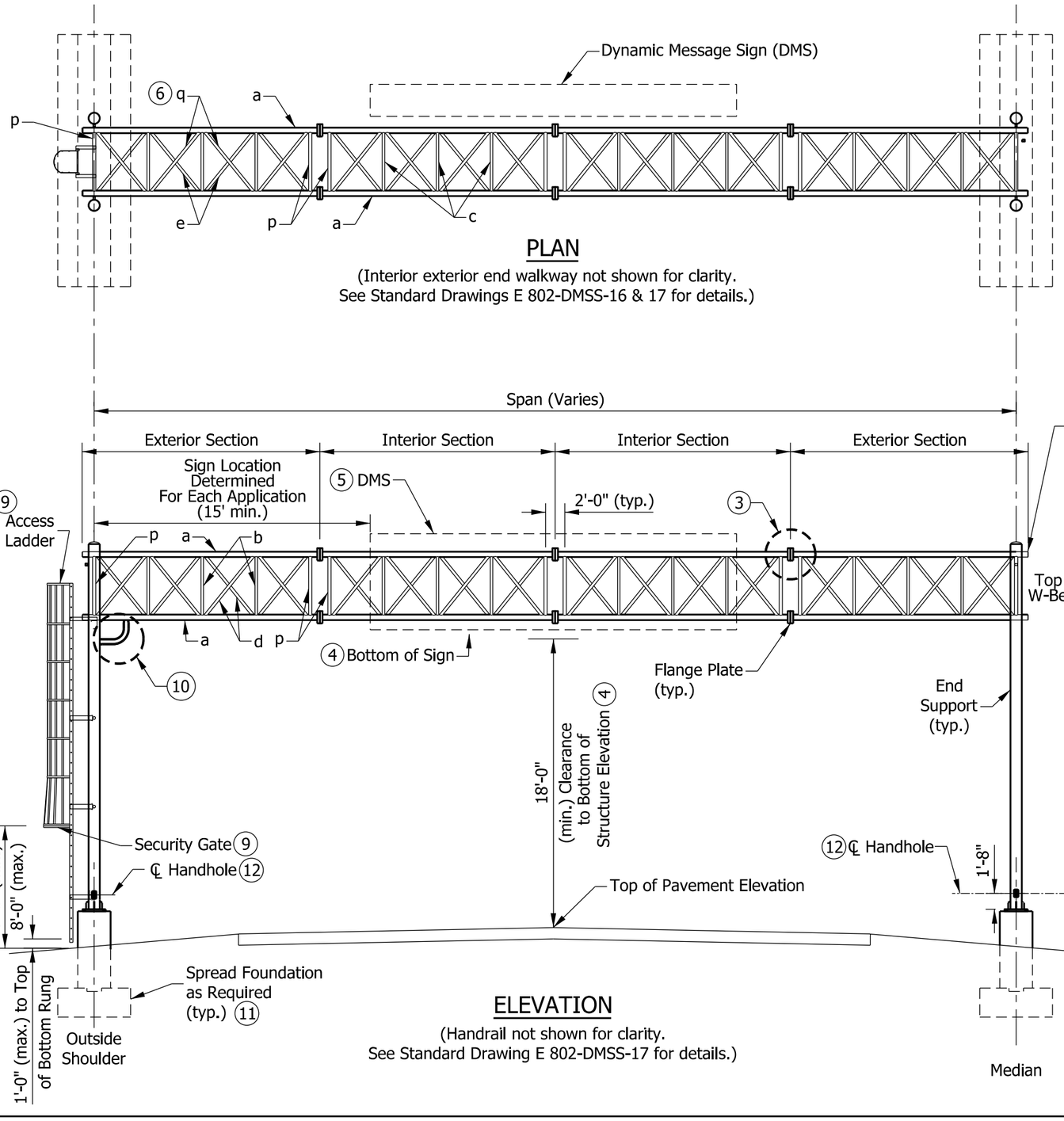

PLAN

(Interior exterior end walkway not shown for clarity.
See Standard Drawings E 802-DMSS-16 & 17 for details.)

ELEVATION

(Handrail not shown for clarity.
See Standard Drawing E 802-DMSS-17 for details.)

END SUPPORT
Column (h)

NOTES:

1. See Standard Drawings E 802-DMSS-03 for isometric view and table with member sizes.
2. Max. deviation of any chord from a straight line in any section shall be 1/8 in. Box truss to be max. of 3/8 in. out of a straight line over the entire length of the structure in the vertical plane.

(3) See Standard Drawings E 802-DMSS-06 and 07 for chord connection welds, flange, and chord end plate details.

(4) See Standard Drawing E 802-DMSS-16 for the bottom of structure elevation and grating details.

(5) Maximum sign area is 300 sq. ft.

(6) See Standard Drawing E 802-DMSS-03 for counter diagonals on exterior truss sections.

(7) See Standard Drawing E 802-DMSS-08 for upper chord connections details.

(8) See Standard Drawing E 802-DMSS-09 for lower chord connections details.

(9) See Standard Drawing E 802-DMSS-13, 14, and 15 for access ladder and security gate details.

(10) See Standard Drawing E 802-DMSS-19 for wiring layout and wire-outlet details.

(11) See Standard Drawings E 802-DMSS-20 through 23 for spread foundation details.

(12) See Standard Drawing E 802-DMSS-11 for handhole detail.

TRUSS MEMBERS (ALUMINUM)
- a - Chords
- b - Verticals
- c - Horizontals
- d - Vertical Diagonals
- e - Horizontal Diagonals
- p - End Verticals and Horizontals
- q - Counter Diagonals

END SUPPORT MEMBERS (STEEL)
- f - Horizontals
- g - Diagonals
- h - Columns
- j - W-Beam

INDIANA DEPARTMENT OF TRANSPORTATION

DYNAMIC MESSAGE SIGN STRUCTURE PLAN & ELEVATION

SEPTEMBER 2022

STANDARD DRAWING NO. E 802-DMSS-02

DAVID H. BORUFF REGISTERED No. 60900348 STATE OF INDIANA PROFESSIONAL ENGINEER

DESIGN STANDARDS ENGINEER — DATE 05/17/22

CHIEF ENGINEER — DATE 06/28/2022

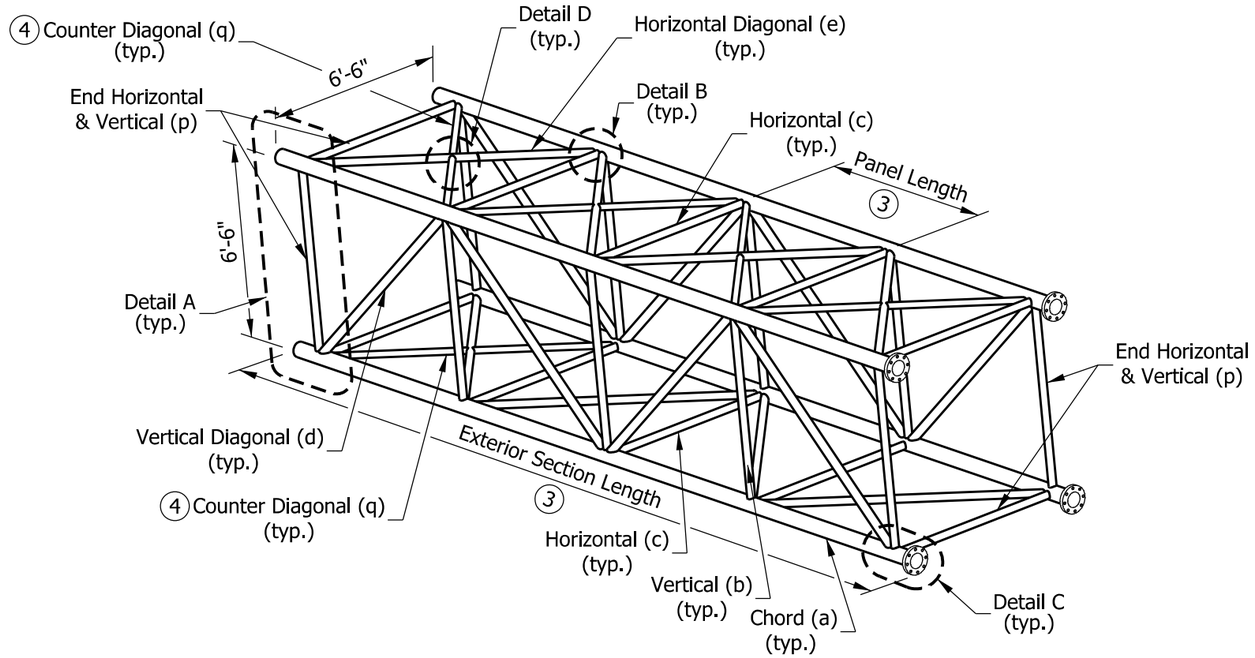

TYPICAL EXTERIOR TRUSS SECTION

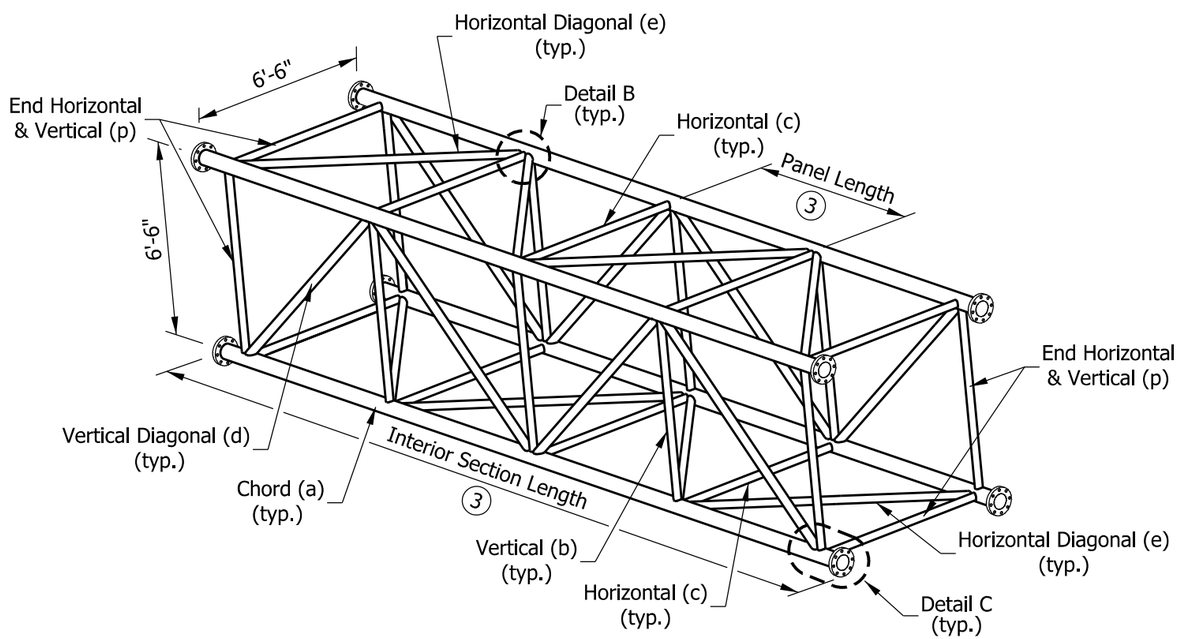

TYPICAL INTERIOR TRUSS SECTION

NOTES:

1. See Standard Drawing E 802-DMSS-06 for Details A through D.
2. Truss members to be aluminum. End support members to be steel. Steel pipe diameters shown in table are nominal pipe sizes.

(3) Number of panels and sections varies. See Standard Drawing E 802-DMSS-04 and 05 for recommended dimensions.

(4) Counter Diagonal (q) shall be provided in exterior sections at the top of each panel and at the bottom of end panel only as shown. It is not required in interior sections.

5. See Standard Drawing E 802-DMSS-02 for end support members.

MAX. SPAN = 130 ft. MAX. SIGN AREA = 300 sq. ft.
MAX. MOUNTING HEIGHT = 24'-6"

ALUMINUM TRUSS MEMBERS		
MEMBER	MARK	O.D. (IN.) x WALL THK. (IN.)
CHORD	a	7 x 0.500
VERTICAL	b	3.5 x 0.375
HORIZONTAL	c	4 x 0.250
VERTICAL DIAGONAL	d	4.5 x 0.500
HORIZONTAL DIAGONAL	e	5.5 x 0.500
END VERTICAL & HORIZONTAL	p	5.5 x 0.500
COUNTER DIAGONAL (SEE NOTE 4)	q	2.5 x 0.500
STEEL END-SUPPORT MEMBERS		
COLUMN	h	14 x 0.375
HORIZONTAL	f	3.5 x 0.216
DIAGONAL	g	5.563 x 0.375
W-BEAM	j	W10 x 68

INDIANA DEPARTMENT OF TRANSPORTATION

DYNAMIC MESSAGE SIGN STRUCTURE
TRUSS SECTIONS, MEMBER SIZE TABLE

SEPTEMBER 2022

STANDARD DRAWING NO. E 802-DMSS-03

DAVID H. BORUFF
REGISTERED
No. 60900348
STATE OF INDIANA
PROFESSIONAL ENGINEER

David H Boruff 05/17/22
DESIGN STANDARDS ENGINEER DATE

06/28/2022
CHIEF ENGINEER DATE

DIMENSIONS FOR DYNAMIC MESSAGE SIGN STRUCTURES (34' THRU 81')

SPAN	EXTERIOR SECTIONS					INTERIOR SECTIONS			
SPAN-TRUSS LENGTH, (FT)	NO. OF EXT. SECTIONS	NO. OF PANELS PER SECTION	VARIABLE END DIMEN.	PANEL LENGTH	SECTION LENGTH	NO. OF INT. SECTIONS	NO. OF PANELS PER SECTION	PANEL LENGTH	SECTION LENGTH
34	1	6	6"	5'-6"	35'-6"	0			
35	1	6	6"	5'-8"	36'-6"	0			
36	2	3	6"	5'-6"	18'-9"	0			
37	2	3	6"	5'-8"	19'-3"	0			
38	2	3	6"	5'-10"	19'-9"	0			
39	2	3	6"	6'-0"	20'-3"	0			
40	2	3	6"	6'-2"	20'-9"	0			
41	2	3	6"	6'-4"	21'-3"	0			
42	2	3	6"	6'-6"	21'-9"	0			
43	2	4	6"	5'-0"	22'-3"	0			
44	2	4	6"	5'-1 1/2"	22'-9"	0			
45	2	4	6"	5'-3"	23'-3"	0			
46	2	4	6"	5'-4 1/2"	23'-9"	0			
47	2	4	6"	5'-6"	24'-3"	0			
48	2	4	6"	5'-7 1/2"	24'-9"	0			
49	2	4	6"	5'-9"	25'-3"	0			
50	2	4	6"	5'-10 1/2"	25'-9"	0			
51	2	4	6"	6'-0"	26'-3"	0			
52	2	4	6"	6'-1 1/2"	26'-9"	0			
53	2	4	6"	6'-3"	27'-3"	0			
54	2	4	6"	6'-4 1/2"	27'-9"	0			
55	2	4	6"	6'-6"	28'-3"	0			
56	2	5	5 1/4"	5'-3 3/4"	28'-9"	0			
57	2	5	6 1/4"	5'-4 3/4"	29'-3"	0			
58	2	5	6"	5'-6"	29'-9"	0			
59	2	5	5 3/4"	5'-7 1/4"	30'-3"	0			
60	2	5	5 1/2"	5'- 8 1/2"	30'-9"	0			
61	2	5	6 1/2"	5'-9 1/2"	31'-3"	0			
62	2	5	6 1/4"	5'-10 3/4"	31'-9"	0			
63	2	5	6"	6'-0"	32'-3"	0			
64	2	5	5 3/4"	6'-1 1/4"	32'-9"	0			
65	2	5	5 1/2"	6'-2 1/2"	33'-3"	0			
66	2	5	5 1/4"	6'-3 3/4"	33'-9"	0			
67	2	5	5"	6'-5"	34'-3"	0			
68	2	5	6"	6'-6"	34'-9"	0			
69	2	4	6"	5'-4"	23'-7"	1	4	5'-4"	23'-4"
70	2	4	6"	5'-5"	23'-11"	1	4	5'-5"	23'-8"
71	2	4	6"	5'-6"	24'-3"	1	4	5'-6"	24'-0"
72	2	4	6"	5'-7"	24'-7"	1	4	5'-7"	24'-4"
73	2	4	6"	5'-8"	24'-11"	1	4	5'-8"	24'-8"
74	2	4	6"	5"-9"	25'-3"	1	4	5"-9"	25'-0"
75	2	4	6"	5'-10"	25'-7"	1	4	5'-10"	25'-4"
76	2	4	6"	5'-11"	25'-11"	1	4	5'-11"	25'-8"
77	2	4	6"	6'-0"	26'-3"	1	4	6'-0"	26'-0"
78	2	4	6"	6'-1"	26'-7"	1	4	6'-1"	26'-4"
79	2	4	6"	6'-2"	26'-11"	1	4	6'-2"	26'-8"
80	2	4	6"	6'-3"	27'-3"	1	4	6'-3"	27'-0"
81	2	4	6"	6'-4"	27'-7"	1	4	6'-4"	27'-4"

NOTES:

1. The table of dimensions for a dynamic message sign structure is divided and put on two Standard Drawings E 802-DMSS-04 and 05. The table shows dimensions with all sections requirements accounted for.
2. All panels on a truss shall be the same length. The minimum panel length for all trusses is 5 ft - 0 in. and the maximum is 6 ft - 6 in.
3. A single interior section in a truss shall have an even number of panels to maintain the pattern of the vertical diagonals.
4. Use minimum number of sections for each truss, keeping the maximum section length at 35 ft - 6 in.
5. See Standard Drawing E 802-DMSS-05 for required camber.

INDIANA DEPARTMENT OF TRANSPORTATION

DYNAMIC MESSAGE SIGN STRUCTURE
TABLE OF DIMENSIONS
SPANS 34' THRU 81'
SEPTEMBER 2022

STANDARD DRAWING NO. E 802-DMSS-04

DAVID H. BORUFF REGISTERED No. 60900348 STATE OF INDIANA PROFESSIONAL ENGINEER

05/17/22
DESIGN STANDARDS ENGINEER DATE

06/28/2022
CHIEF ENGINEER DATE

DIMENSIONS FOR DYNAMIC MESSAGE SIGN STRUCTURES (82' THRU 130')

SPAN	EXTERIOR SECTIONS					INTERIOR SECTIONS			
SPAN-TRUSS LENGTH, (FT)	NO. OF EXT. SECTIONS	NO. OF PANELS PER SECTION	VARIABLE END DIMEN.	PANEL LENGTH	SECTION LENGTH	NO. OF INT. SECTIONS	NO. OF PANELS PER SECTION	PANEL LENGTH	SECTION LENGTH
82	2	4	6"	6'-5"	27'-11"	1	4	6'-5"	27'-8"
83	2	4	6"	6'-6"	28'-3"	1	4	6'-6"	28'-0"
84	2	5	5 3/4"	5'-7 3/4"	30'-5 1/2"	1	4	5'-7 3/4"	24'-7"
85	2	5	6 1/2"	5'-8 1/2"	30'-10"	1	4	5'-8 1/2"	24'-10"
86	2	5	5 1/2"	5'-9 1/2"	31'-2"	1	4	5'-9 1/2"	25'-2"
87	2	5	6 1/4"	5'-10 1/4"	31'-6 1/2"	1	4	5'-10 1/4"	25'-5"
88	2	5	7"	5'-11"	31'-11"	1	4	5'-11"	25'-8"
89	2	5	6"	6'-0"	32'-3"	1	4	6'-0"	26'-0"
90	2	5	5"	6'-1"	32'-7"	1	4	6'-1"	26'-4"
91	2	5	5 3/4"	6'-1 3/4"	32'-11 1/2"	1	4	6'-1 3/4"	26'-7"
92	2	5	6 1/2"	6'-2 1/2"	33'-4"	1	4	6'-2 1/2"	26'-10"
93	2	5	5 1/2"	6'-3 1/2"	33'-8"	1	4	6'-3 1/2"	27'-2"
94	2	5	6 1/4"	6'-4 1/4"	34'-0 1/2"	1	4	6'-4 1/4"	27'-5"
95	2	5	5 1/4"	6'-5 1/4"	34'-4 1/2"	1	4	6'-5 1/4"	27'-9"
96	2	5	6"	6'-6"	34'-9"	1	4	6'-6"	28'-0"
97	2	4	6"	5'-7 1/2"	24'-9"	2	4	5'-7 1/2"	24'-6"
98	2	4	6"	5'-8 1/4"	25'-0"	2	4	5'-8 1/4"	24'-9"
99	2	4	6"	5'-9"	25'-3"	2	4	5'-9"	25'-0"
100	2	4	6"	5'-9 3/4"	25'-6"	2	4	5'-9 3/4"	25'-3"
101	2	4	6"	5'-10 1/2"	25'-9"	2	4	5'-10 1/2"	25'-6"
102	2	4	6"	5'-11 1/4"	26'-0"	2	4	5'-11 1/4"	25'-9"
103	2	4	6"	6'-0"	26'-3"	2	4	6'-0"	26'-0"
104	2	4	6"	6'-0 3/4"	26'-6"	2	4	6'-0 3/4"	26'-3"
105	2	4	6"	6'-1 1/2"	26'-9"	2	4	6'-1 1/2"	26'-6"
106	2	4	6"	6'-2 1/4"	27'-0"	2	4	6'-2 1/4"	26'-9"
107	2	4	6"	6'-3"	27'-3"	2	4	6'-3"	27'-0"
108	2	4	6"	6'-3 3/4"	27'-6"	2	4	6'-3 3/4"	27'-3"
109	2	4	6"	6'-4 1/2"	27'-9"	2	4	6'-4 1/2"	27'-6"
110	2	4	6"	6'-5 1/4"	28'-0"	2	4	6'-5 1/4"	27'-9"
111	2	4	6"	6'-6"	28'-3"	2	4	6'-6"	28'-0"
112	2	5	6"	5'-3"	28'-6"	2	5	5'-3"	28'-3"
113	2	5	7"	5'-3 1/2"	28'-9 1/2"	2	5	5'-3 1/2"	28'-5 1/2"
114	2	5	5 1/2"	5'-4 1/4"	28'-11 3/4"	2	5	5'-4 1/4"	28'-9 1/4"
115	2	5	6 1/2"	5'-4 3/4"	29'-3 1/4"	2	5	5'-4 3/4"	28'-11 3/4"
116	2	5	5"	5'-5 1/2"	29'-5 1/2"	2	5	5'-5 1/2"	29'-3 1/2"
117	2	5	6"	5'-6"	29'-9"	2	5	5'-6"	29'-6"
118	2	5	5"	5'-6 1/2"	29'-10 1/2"	2	5	5'-6 1/2"	29'-8 1/2"
119	2	5	5 1/2"	5'-7 1/4"	30'-2 3/4"	2	5	5'-7 1/4"	30'-0 1/4"
120	2	5	6 1/2"	5'-7 3/4"	30'-6 1/4"	2	5	5'-7 3/4"	30'-2 3/4"
121	2	5	5"	5'-8 1/2"	30'-8 1/2"	2	5	5'-8 1/2"	30'-6 1/2"
122	2	5	6"	5'-9"	31'-0"	2	5	5'-9"	30'-9"
123	2	5	7"	5'-9 1/2"	31'-3 1/2"	2	5	5'-9 1/2"	30'-11 1/2"
124	2	5	5 1/2"	5'-10 1/4"	31'-5 3/4"	2	5	5'-10 1/4"	31'-3 1/4"
125	2	5	6 1/2"	5'-10 3/4"	31'-9 1/4"	2	5	5'-10 3/4"	31'-5 3/4"
126	2	5	5"	5'-11 1/2"	31' -11 1/2"	2	5	5'-11 1/2"	31'-9 1/2"
127	2	5	6"	6'-0"	32'-3"	2	5	6'-0"	32'-0"
128	2	5	7"	6'-0 1/2"	32'-6 1/2"	2	5	6'-0 1/2"	32'-2 1/2"
129	2	5	5 1/2"	6'-1 1/4"	32'-8 3/4"	2	5	6'-1 1/4"	32'-6 1/4"
130	2	5	6 1/2"	6'-1 3/4"	33'-0 1/4"	2	5	6'-1 3/4"	32'-8 3/4"

NOTES:

1. Camber diagrams to build truss structures with 2 to 4 sections are shown. Cambers shown are for fabrication only and are measured with trusses fully supported at no-load conditions. Allowable camber tolerance for truss is 25% of specific camber value.
2. See Standard Drawing E 805-DMSS-04 for additional notes.

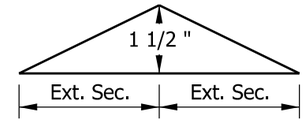

CAMBER DIAGRAM (2-Section Truss)

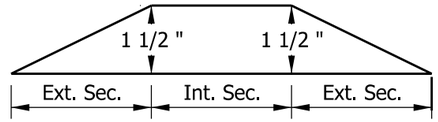

CAMBER DIAGRAM (3-Section Truss)

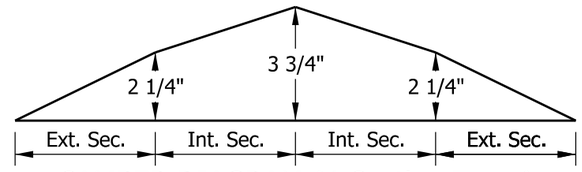

CAMBER DIAGRAM (4-Section Truss)

INDIANA DEPARTMENT OF TRANSPORTATION

DYNAMIC MESSAGE SIGN STRUCTURE
TABLE OF DIMENSIONS
SPANS 82' THRU 130' & CAMBER
SEPTEMBER 2022

STANDARD DRAWING NO. E 802-DMSS-05

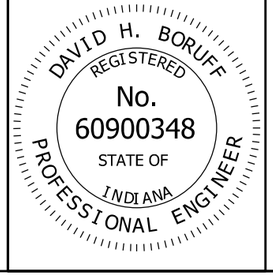

05/17/22
DESIGN STANDARDS ENGINEER DATE

06/28/2022
CHIEF ENGINEER DATE

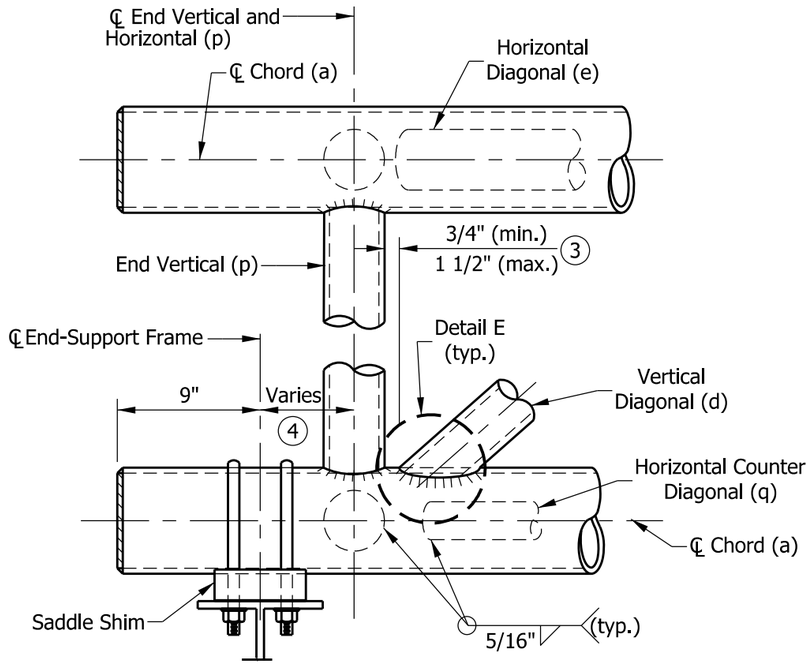

DETAIL A
EXTERIOR SECTION AT END-SUPPORT

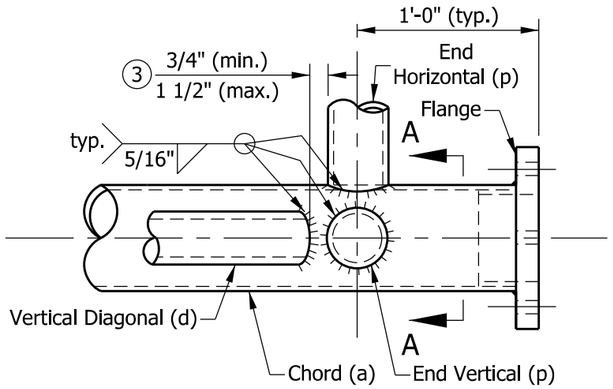

DETAIL C
CHORD AT FLANGE CONNECTION
PLAN VIEW

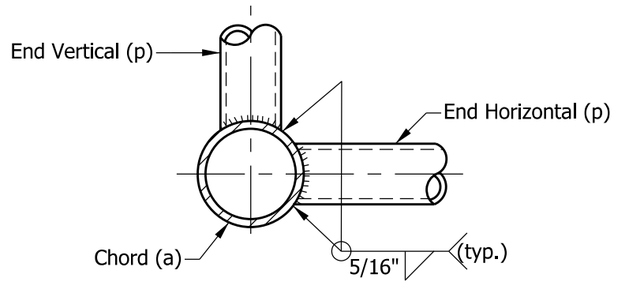

SECTION A-A
TYPICAL JOIN DETAILS

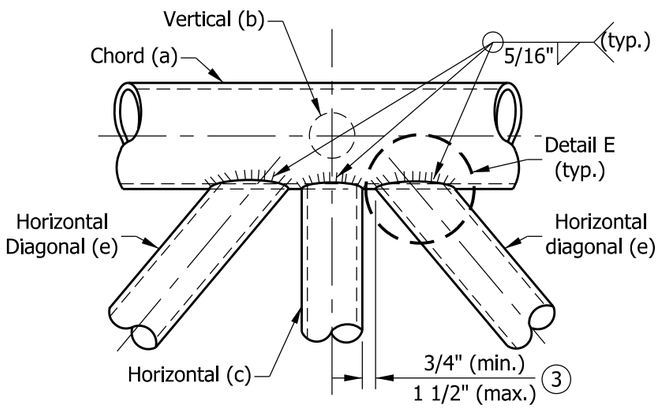

DETAIL B
TYPICAL PANEL CONNECTION
PLAN VIEW

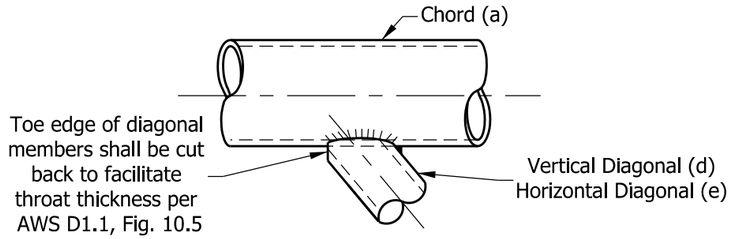

DETAIL E

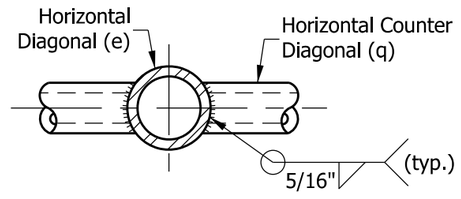

DETAIL D

NOTES:

1. All bracing members shall be machined to provide a snug fit to the chord along the entire edge of bracing members before welding.
2. See Standard Drawing E 802-DMSS-03 for member locations and sizes.

(3) Vertical and horizontal diagonals shall be detailed for minimum offset from the panel point based on the following: offset shall be such as to provide a ¾ in. minimum to 1½ in. maximum clearance between any diagonal and any horizontal or vertical member; and provide clearance for U-bolt connection for signs.

(4) For variable end dimension, Standard Drawings E 802-DMSS-04 and 05.

INDIANA DEPARTMENT OF TRANSPORTATION

DYNAMIC MESSAGE SIGN STRUCTURE
CHORD CONNECTIONS AND WELD DETAILS

SEPTEMBER 2022

STANDARD DRAWING NO. E 802-DMSS-06

DAVID H. BORUFF
REGISTERED
No. 60900348
STATE OF INDIANA
PROFESSIONAL ENGINEER

David H Boruff 05/17/22
DESIGN STANDARDS ENGINEER DATE

06/28/2022
CHIEF ENGINEER DATE

NOTE:

1. See Standard Drawing E 802-DMSS-02 for chord flange locations.

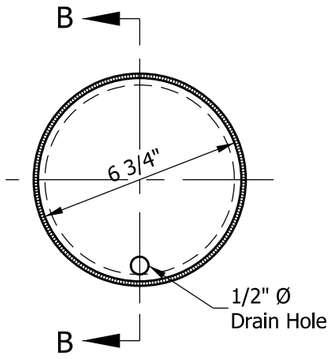

END VIEW

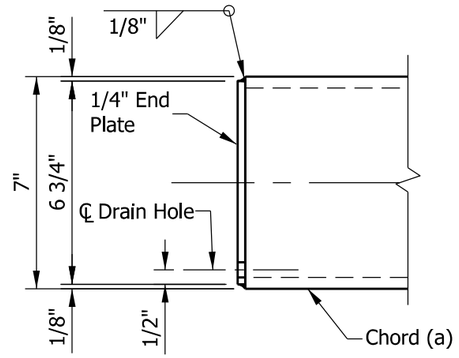

SECTION B-B

CHORD END PLATE DETAILS

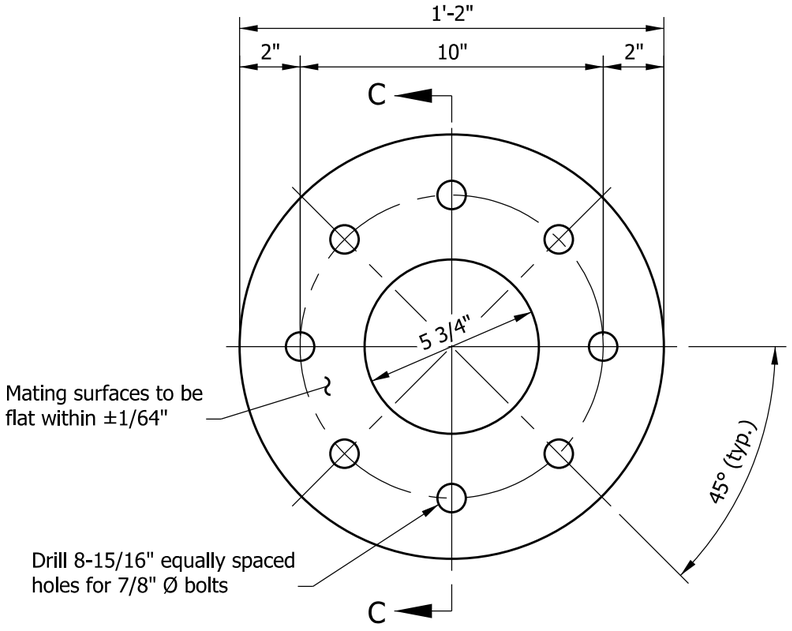

END VIEW

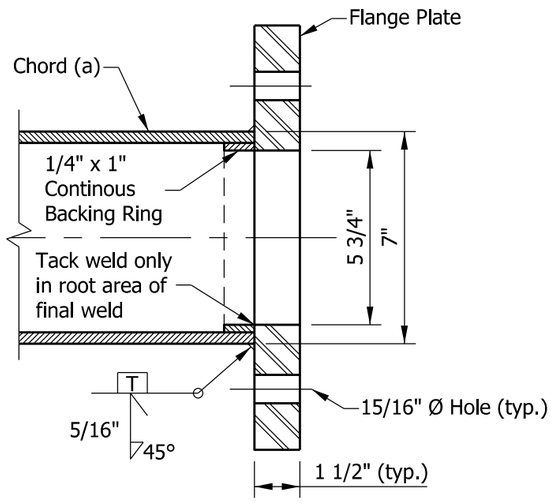

SECTION C-C

FLANGE PLATE DETAILS

INDIANA DEPARTMENT OF TRANSPORTATION

DYNAMIC MESSAGE SIGN STRUCTURE
FLANGE & CHORD END PLATE DETAILS

SEPTEMBER 2022

STANDARD DRAWING NO. E 802-DMSS-07

DAVID H. BORUFF
REGISTERED
No.
60900348
STATE OF
INDIANA
PROFESSIONAL ENGINEER

David H Boruff 05/17/22
DESIGN STANDARDS ENGINEER DATE

06/28/2022
CHIEF ENGINEER DATE

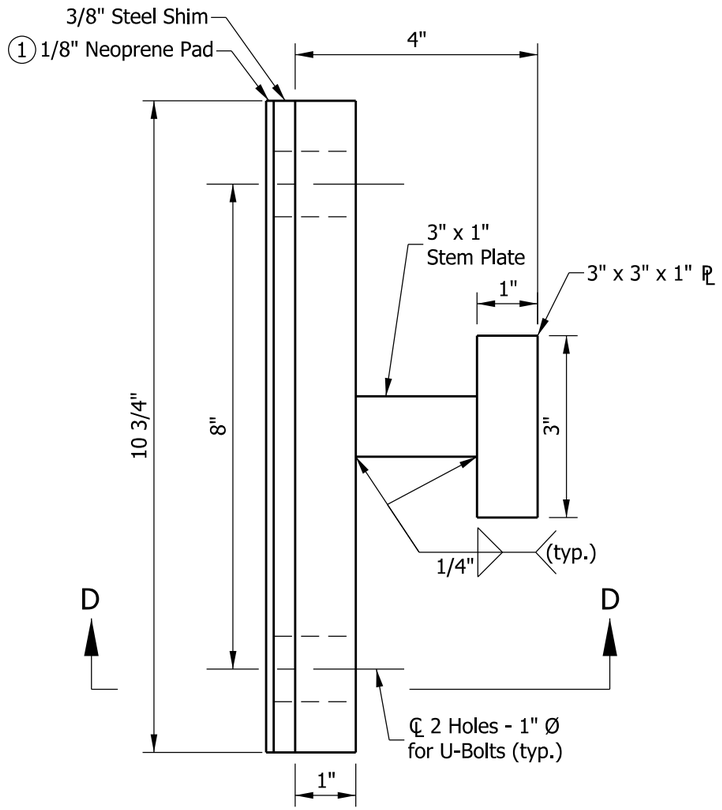

ELEVATION
END-SUPPORT SPACER ASSEMBLY DETAIL

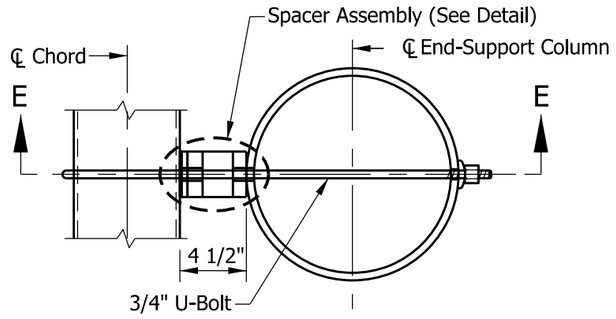

PLAN

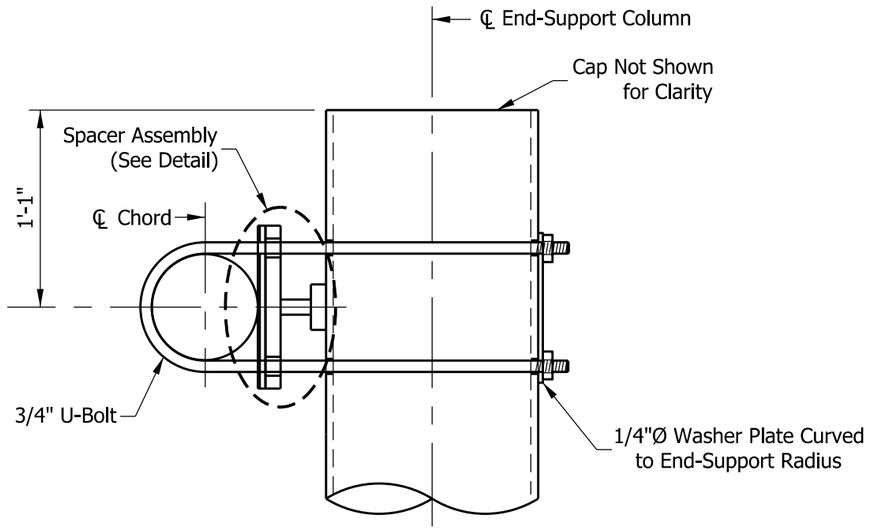

SECTION E-E
UPPER CHORD CONNECTION DETAILS

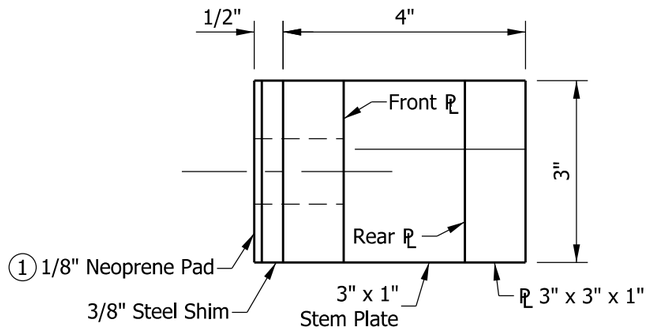

SECTION D-D

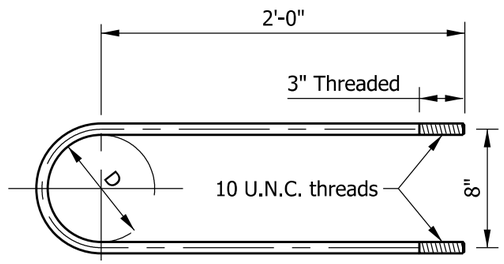

3/4" DIA. STAINLESS STEEL U-BOLT DETAIL

NOTES:

1. Provide isolation from steel-dissimilar metal as required.
2. All spacer assembly material shall be steel.

INDIANA DEPARTMENT OF TRANSPORTATION

DYNAMIC MESSAGE SIGN STRUCTURE
END SUPPORT
UPPER CHORD CONNECTION DETAILS
SEPTEMBER 2022

STANDARD DRAWING NO. E 802-DMSS-08

DAVID H. BORUFF REGISTERED No. 60900348 STATE OF INDIANA PROFESSIONAL ENGINEER

David H. Boruff 05/17/22
DESIGN STANDARDS ENGINEER DATE

06/28/2022
CHIEF ENGINEER DATE

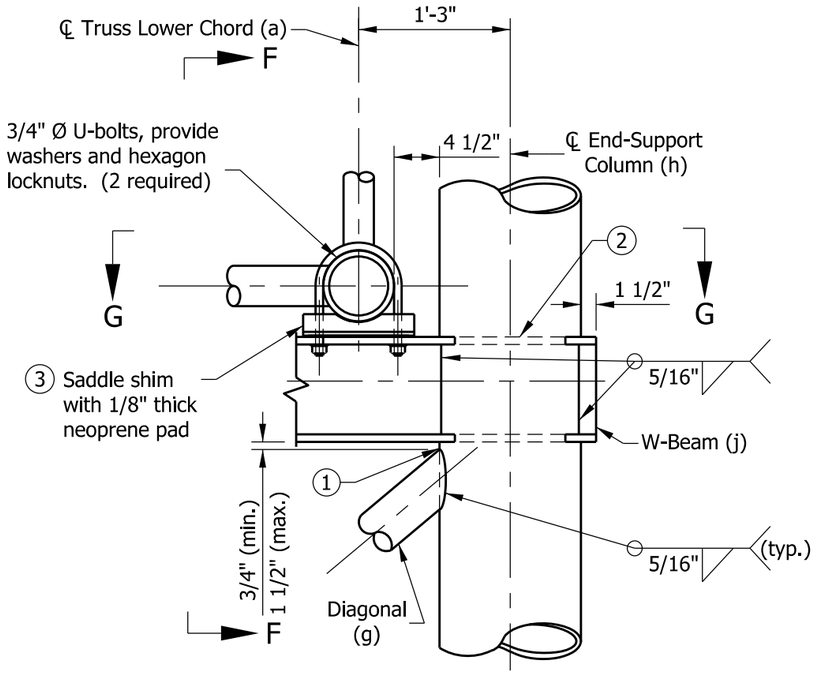

LOWER CHORD CONNECTION DETAIL

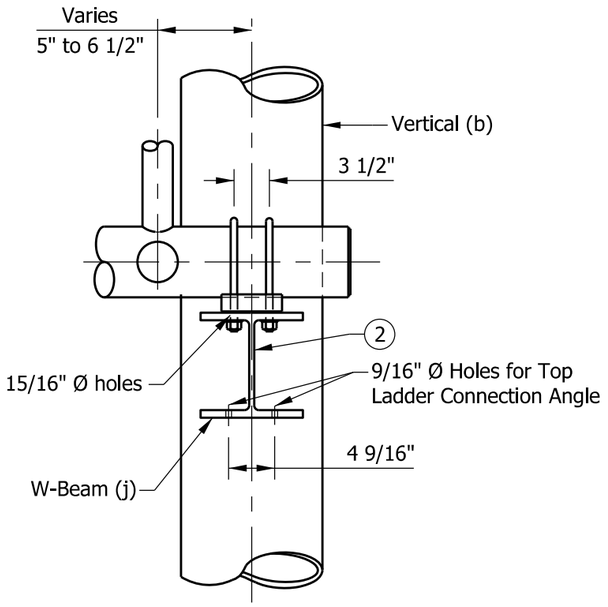

SECTION F-F

NOTES:

1. Toe edge of diagonal member shall be cut back to facilitate throat thickness. See Standard Drawing E 802-DMSS-06 for toe-edge Detail E.
2. Cut holes in end support columns for W-beams to pass through. Holes shall have ⅛ in. maximum clearance to W-beam. Holes in opposite sides of column shall be checked for proper alignment prior to cutting.
3. Neoprene pads shall be provided at all chord-to-W-beam bearing surfaces.
4. See Standard Drawing E 802-DMSS-03 for end-support member sizes.

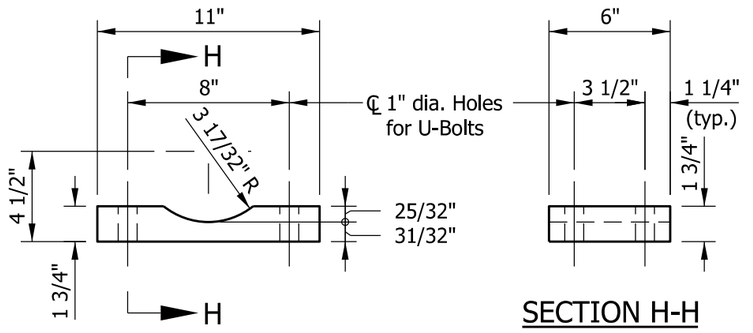

SECTION H-H

SADDLE SHIM DETAIL

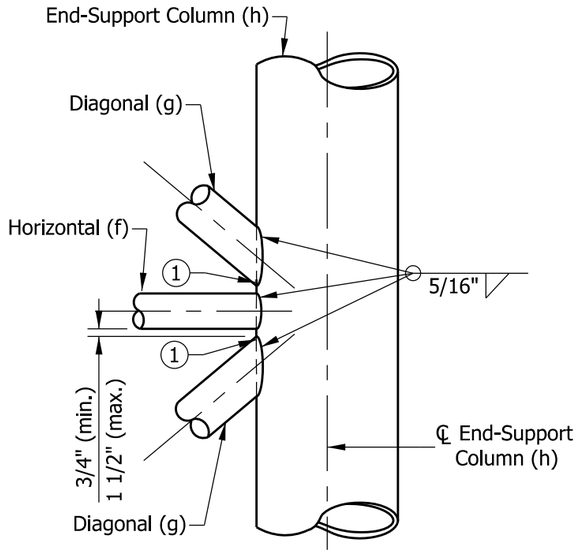

ELEVATION (END SUPPORT)
TYPICAL BRACING MEMBERS CONNECTION

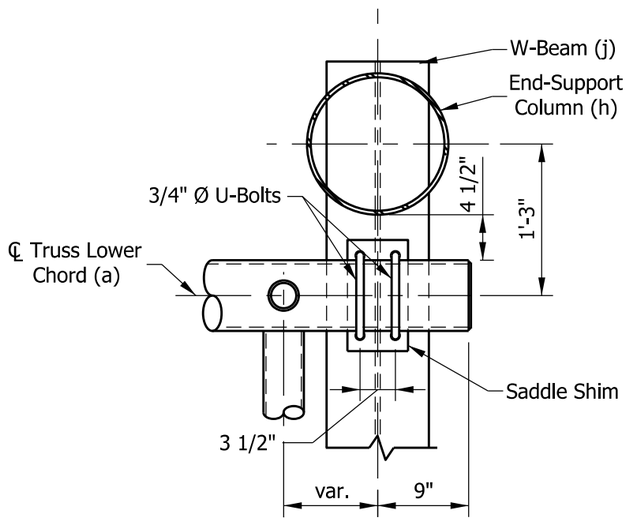

SECTION G-G

INDIANA DEPARTMENT OF TRANSPORTATION

DYNAMIC MESSAGE SIGN STRUCTURE
END-SUPPORT
LOWER CHORD CONNECTION DETAILS
SEPTEMBER 2022

STANDARD DRAWING NO. E 802-DMSS-09

DAVID H. BORUFF REGISTERED No. 60900348 STATE OF INDIANA PROFESSIONAL ENGINEER

05/17/22
DESIGN STANDARDS ENGINEER DATE

06/28/2022
CHIEF ENGINEER DATE

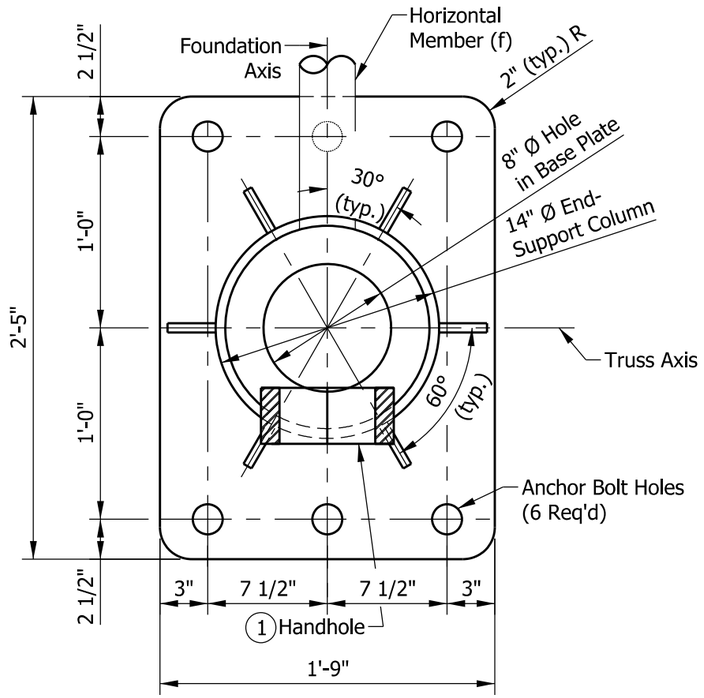

TYPE B-14 BASE PLATE

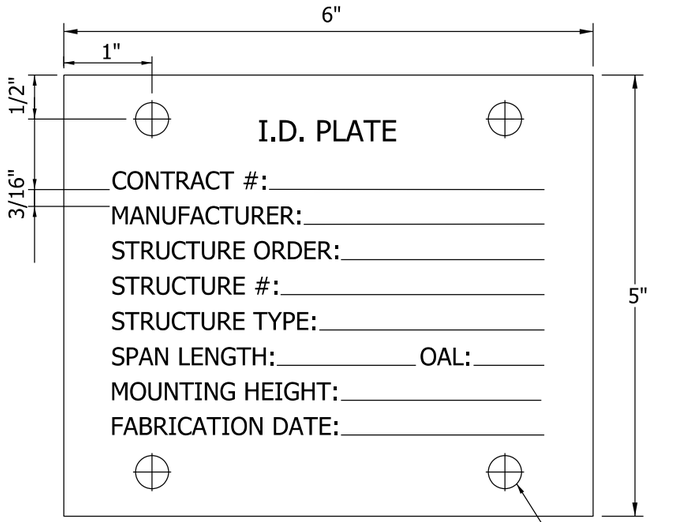

I.D. PLATE

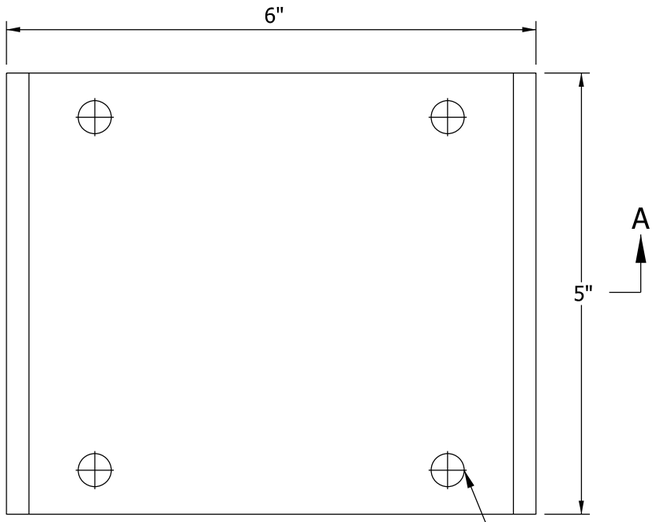

I.D. PLATE CHANNEL

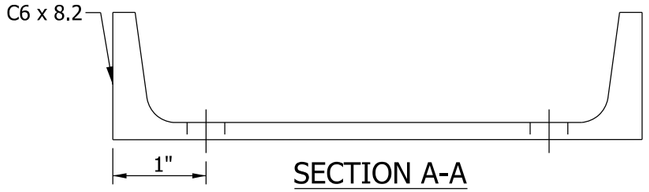

SECTION A-A

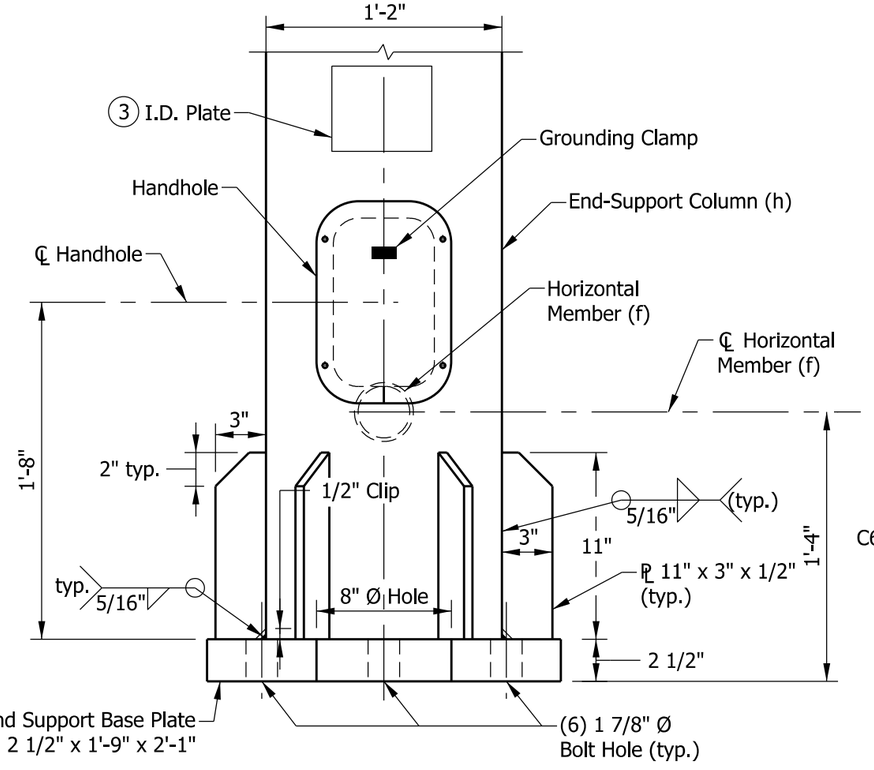

ELEVATION

NOTES:

1. See Standard Drawing E 802-DMSS-11 for handhole details.
2. See Standard Drawing E 802-DMSS-12 for anchor bolts and metal skirt details.
3. I.D. plate is a ⅛ in. thick plate stainless steel plate with the information stamped in 3⁄16 in. black letters:
4. Each end support requires one I.D. plate.

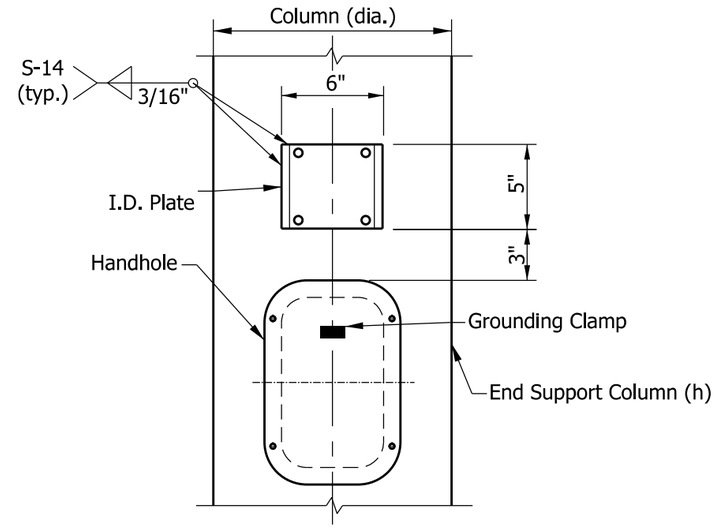

I.D. PLATE LOCATION

INDIANA DEPARTMENT OF TRANSPORTATION

DYNAMIC MESSAGE SIGN STRUCTURE
END SUPPORT
BASE PLATE AND I.D. PLATE DETAILS
SEPTEMBER 2022

STANDARD DRAWING NO. E 802-DMSS-10

DAVID H. BORUFF REGISTERED No. 60900348 STATE OF INDIANA PROFESSIONAL ENGINEER

David H Boruff 05/17/22
DESIGN STANDARDS ENGINEER DATE

06/28/2022
CHIEF ENGINEER DATE

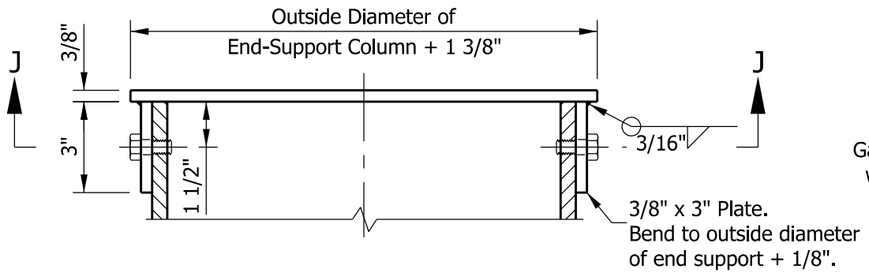

TOP CAP
ELEVATION VIEW

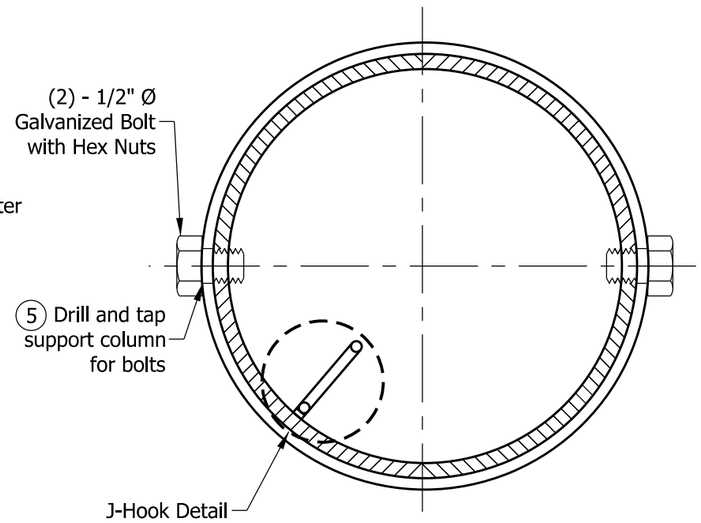

SECTION J-J

NOTES:

1. In lieu of fabricated handhole frame as shown, frame may be cut from 3 in. plate (rolling direction vertical).
2. See Standard Drawing E 802-SNWR-03 for grounding post details. Grounding post to be placed on far side of support directly opposite center of handhole.
3. See Standard Drawing E 802-DMSS-10 for handhole locations.
4. See Standard Drawing E 802-DMSS-03 for thicknesses of end-support column.
5. Bolts shall be located to miss J-hook.
6. One handhole required on each end support.

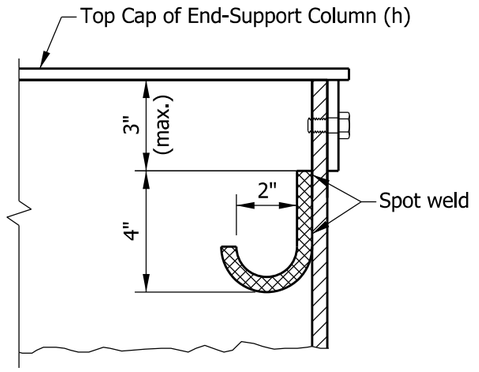

J-HOOK DETAIL

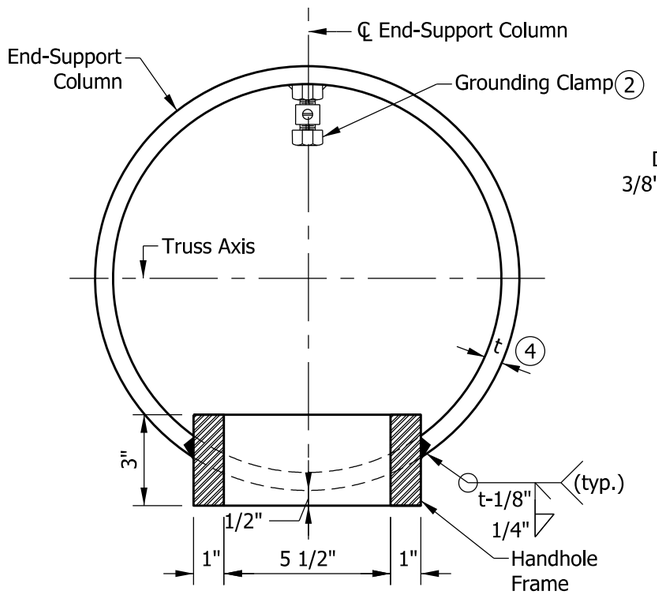

HANDHOLE
SECTION ACROSS COLUMN

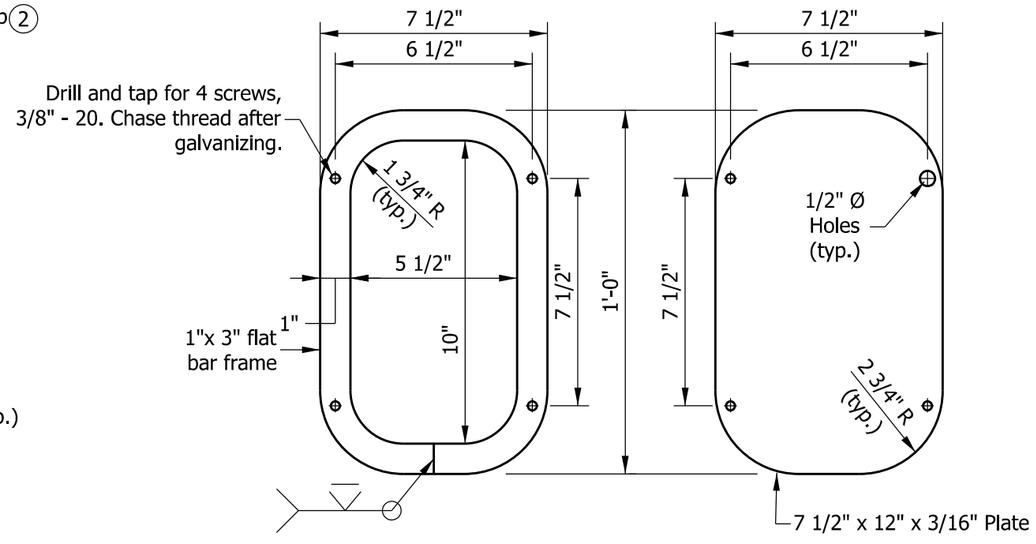

HANDHOLE FRAME DETAIL

HANDHOLE COVER

INDIANA DEPARTMENT OF TRANSPORTATION

DYNAMIC MESSAGE SIGN STRUCTURE
END SUPPORT HANDHOLE, TOP CAP,
AND J-HOOK DETAILS

SEPTEMBER 2022

STANDARD DRAWING NO. E 802-DMSS-11

DAVID H. BORUFF
REGISTERED
No. 60900348
STATE OF INDIANA
PROFESSIONAL ENGINEER

David H Boruff 05/17/22
DESIGN STANDARDS ENGINEER DATE

06/28/2022
CHIEF ENGINEER DATE

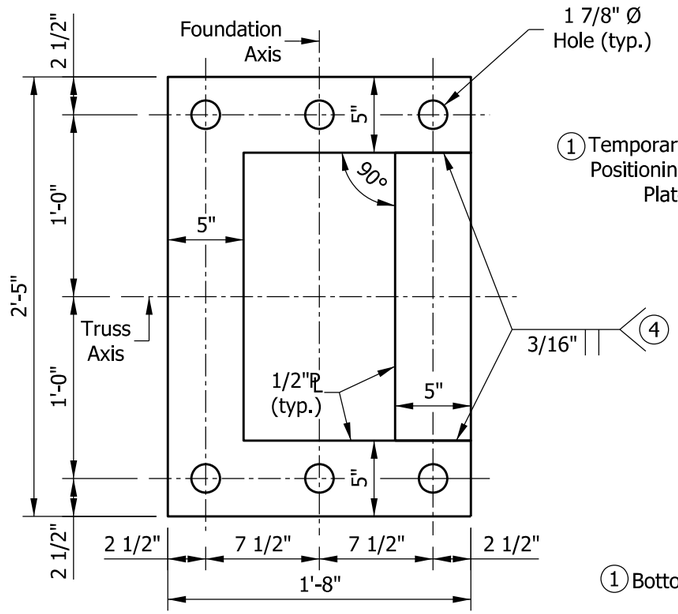

TEMPORARY POSITIONING PLATE

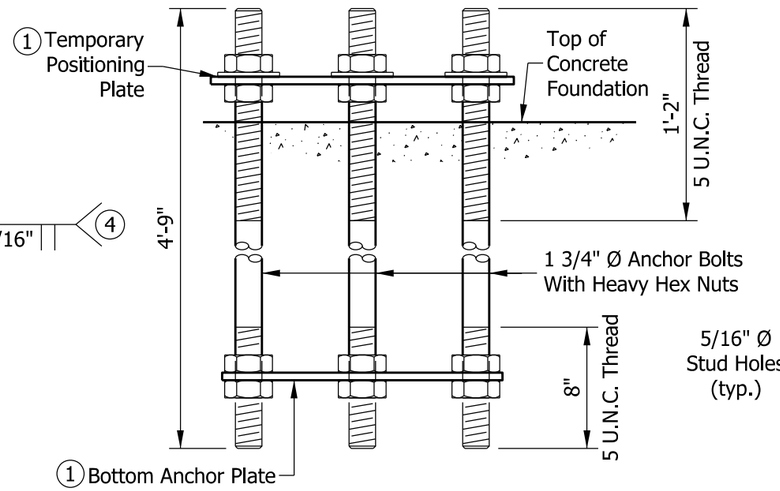

ANCHOR BOLT DETAILS BEFORE CONCRETE PLACEMENT

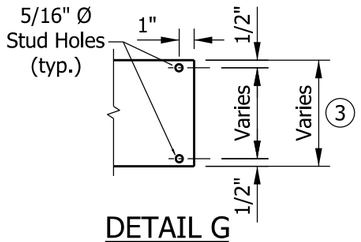

DETAIL G

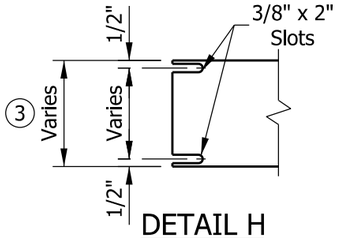

DETAIL H

NOTES:

1. Temporary positioning plate and bottom anchor plate shall be used for all foundations. Temporary positioning plate shall be removed after placing concrete.
2. The galvanized metal skirt shall be secured to base plate after erection as shown in skirt detail.
3. Minimum base plate gap is 2½ in. and can be increased up to 5½ in. Metal skirt width shall be at least 1½ in. more than the actual gap.
4. Contractor has the option to use four separate bars. Weld to maintain angles and shapes as shown.
5. For base plate of end-support, see Standard Drawing E 802-DMSS-10.
6. Anchor bolts shall be tightened as shown in the Star Pattern Tightening Sequence. Lubricant shall be from the Department's QPL.

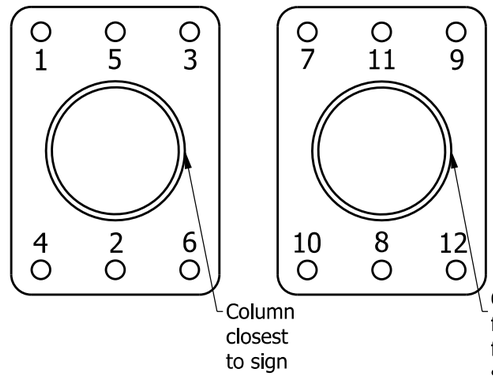

6 STAR PATTERN TIGHTENING SEQUENCE

BOTTOM ANCHOR PLATE

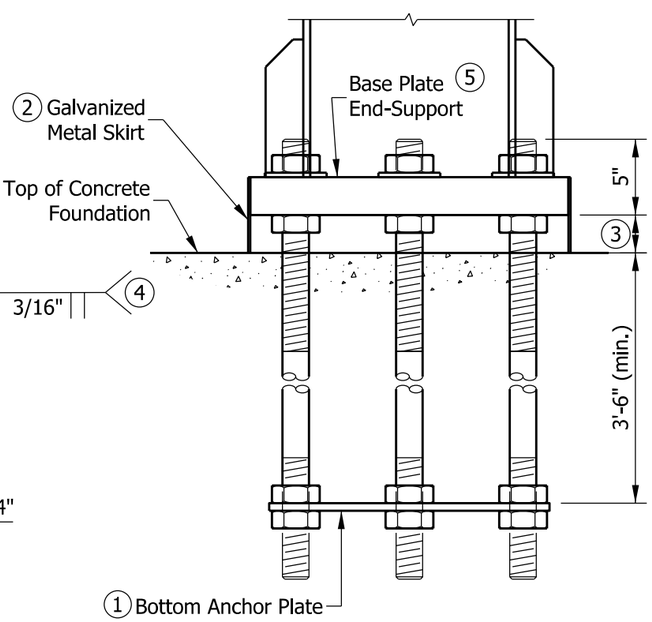

ANCHOR BOLT DETAILS AFTER CONCRETE PLACEMENT

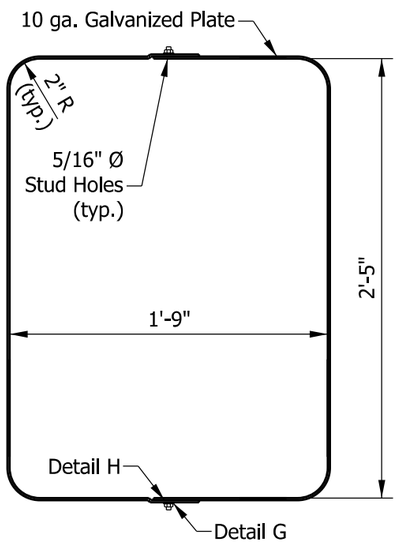

METAL SKIRT DETAIL

INDIANA DEPARTMENT OF TRANSPORTATION

DYNAMIC MESSAGE SIGN STRUCTURE
ANCHOR PLATES, ANCHOR BOLTS,
AND METAL SKIRT DETAILS
SEPTEMBER 2022

STANDARD DRAWING NO. E 802-DMSS-12

DAVID H. BORUFF REGISTERED No. 60900348 STATE OF INDIANA PROFESSIONAL ENGINEER

David H Boruff 05/17/22
DESIGN STANDARDS ENGINEER DATE

06/28/2022
CHIEF ENGINEER DATE

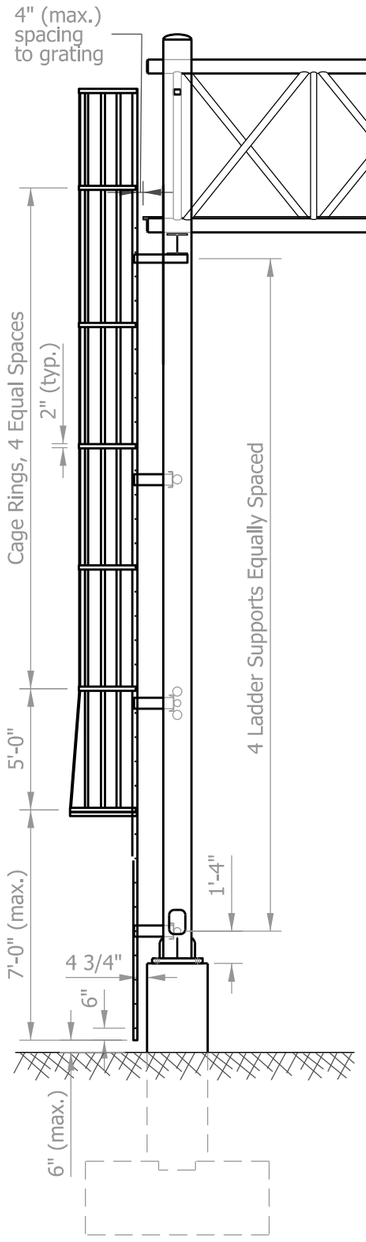

SIDE VIEW

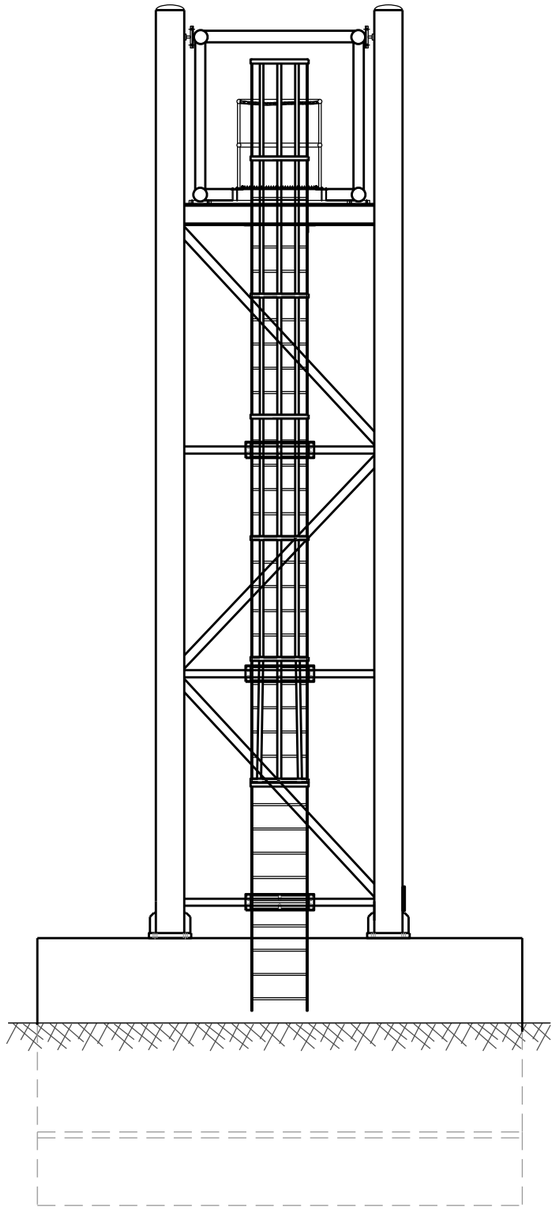

FRONT VIEW
LADDER AND CAGE

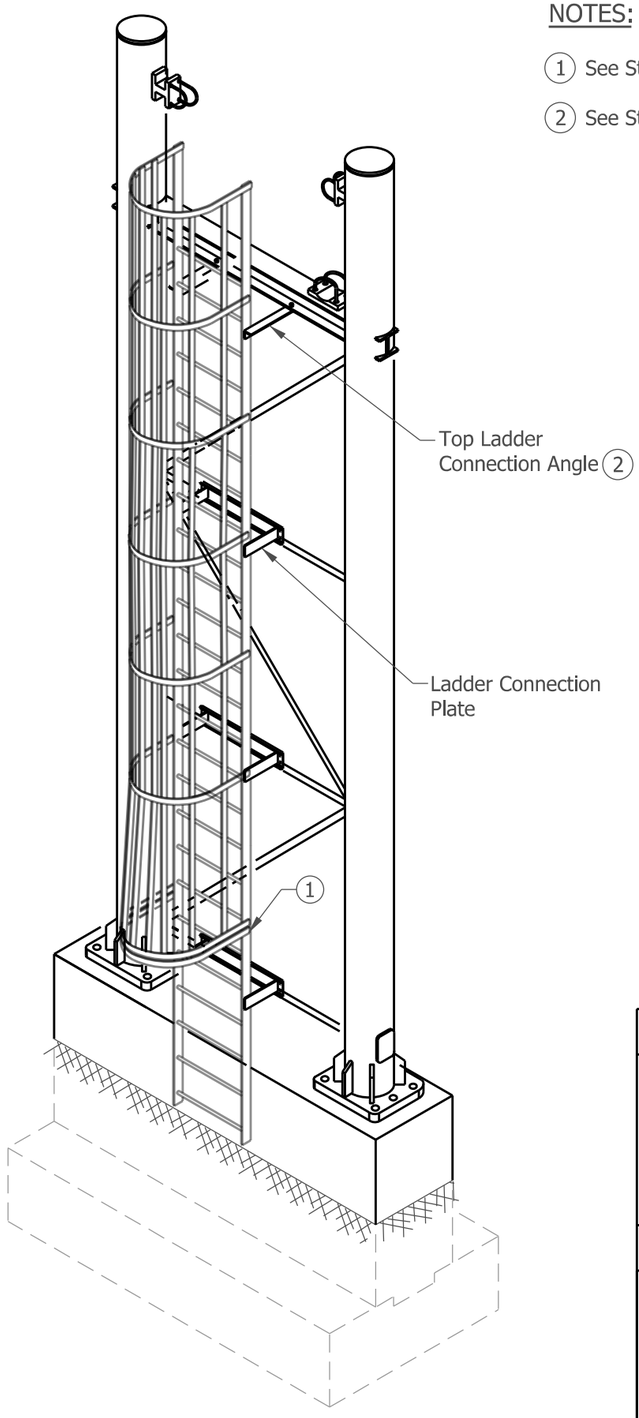

ISOMETRIC VIEW

NOTES:

1. See Standard Drawing E 802-DMSS-15 for security gate details.
2. See Standard Drawing E 802-DMSS-14 for ladder details.

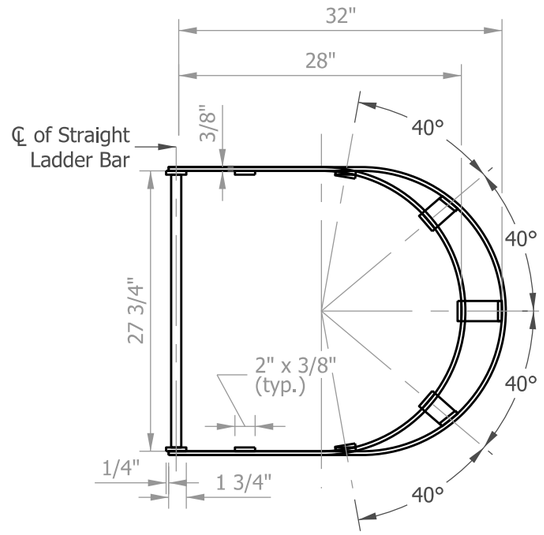

TOP VIEW OF
LADDER AND CAGE

INDIANA DEPARTMENT OF TRANSPORTATION

DYNAMIC MESSAGE SIGN STRUCTURE
LADDER DETAILS

SEPTEMBER 2022

STANDARD DRAWING NO. E 802-DMSS-13

DAVID H. BORUFF
REGISTERED
No.
60900348
STATE OF
INDIANA
PROFESSIONAL ENGINEER

David H Boruff 05/17/22
DESIGN STANDARDS ENGINEER DATE

06/28/2022
CHIEF ENGINEER DATE

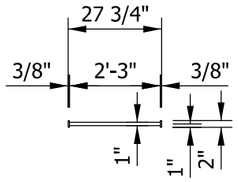

TOP VIEW OF LADDER

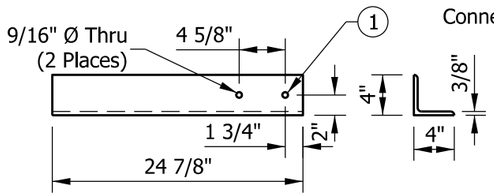

TOP LADDER CONNECTION ANGLE

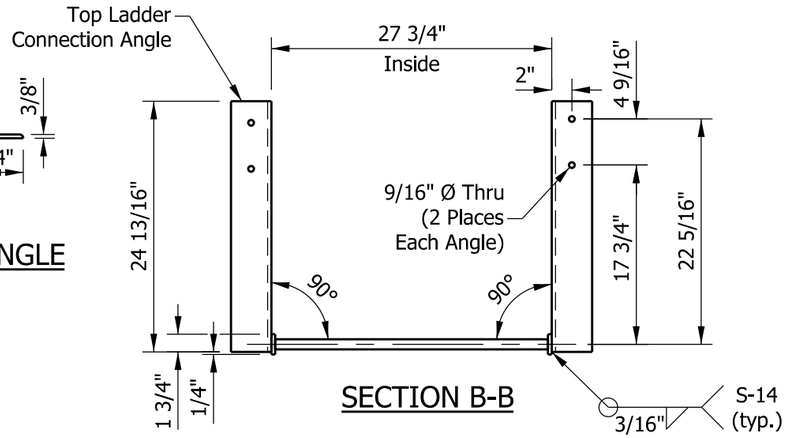

SECTION B-B

NOTE:

1 (1) A-325 bolts ½ in. x 2 in. on each side of the W-beam with (1) flat washer and (1) lock nut.

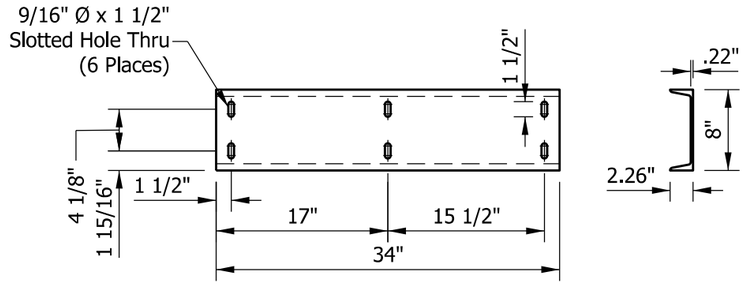

LADDER CONNECTION CHANNEL

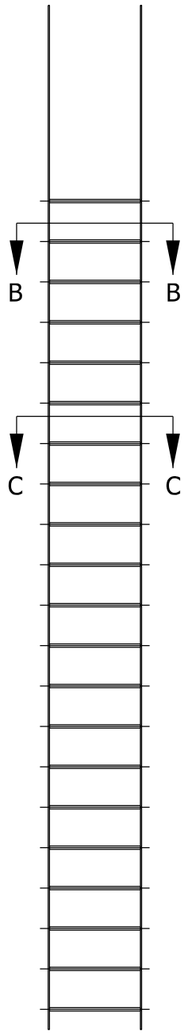

FRONT VIEW OF LADDER

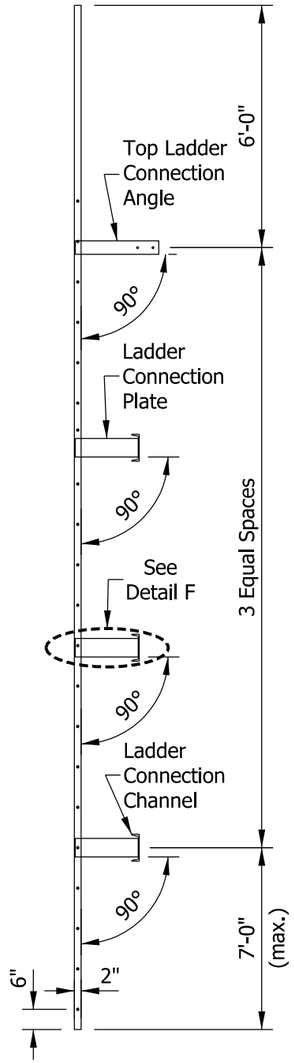

SIDE VIEW OF LADDER AND CAGE

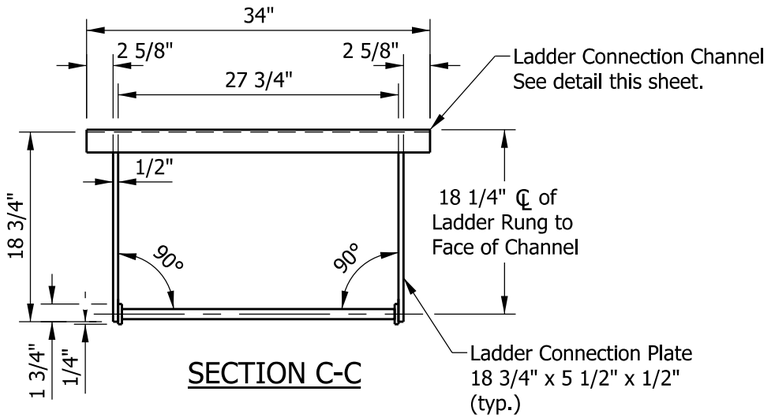

SECTION C-C

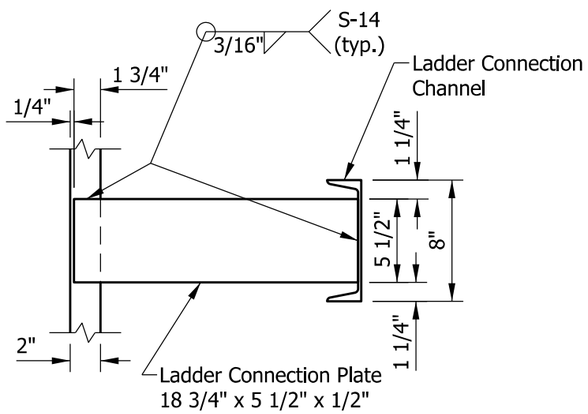

DETAIL F

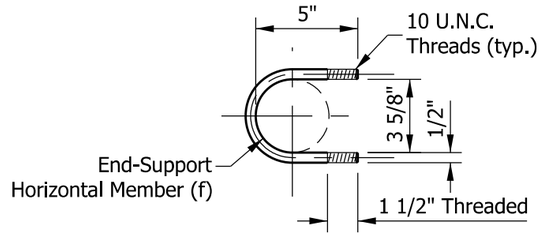

1/2" DIA. STAINLESS STEEL U-BOLT DETAIL
(Used for ladder connection channel)

INDIANA DEPARTMENT OF TRANSPORTATION

DYNAMIC MESSAGE SIGN STRUCTURE
LADDER DETAILS

SEPTEMBER 2022

STANDARD DRAWING NO. E 802-DMSS-14

DAVID H. BORUFF
REGISTERED
No. 60900348
STATE OF INDIANA
PROFESSIONAL ENGINEER

David H Boruff 05/17/22
DESIGN STANDARDS ENGINEER DATE

06/28/2022
CHIEF ENGINEER DATE

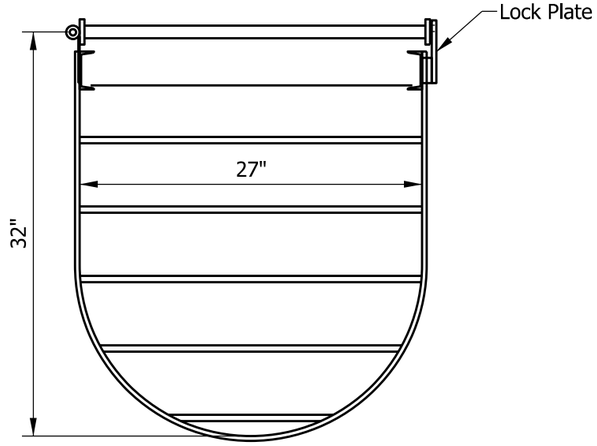

TOP

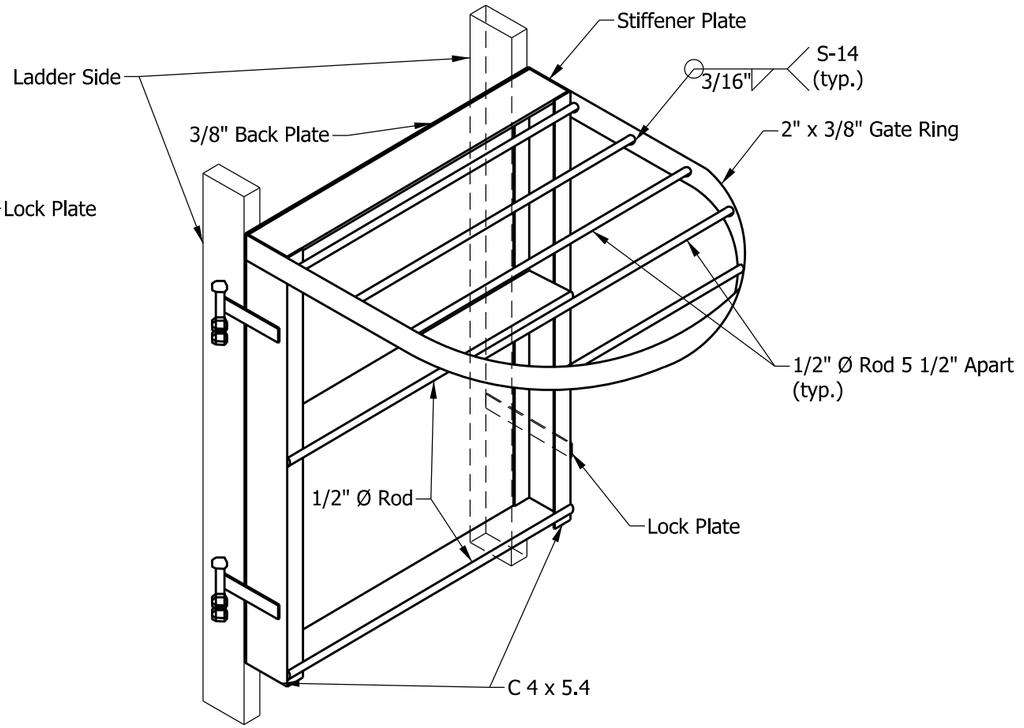

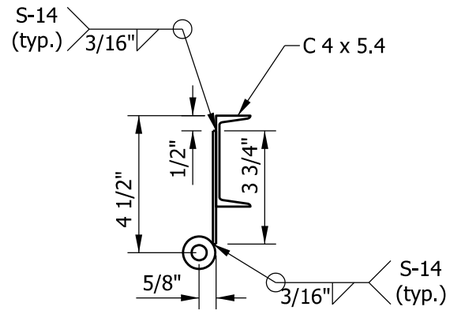

HINGE

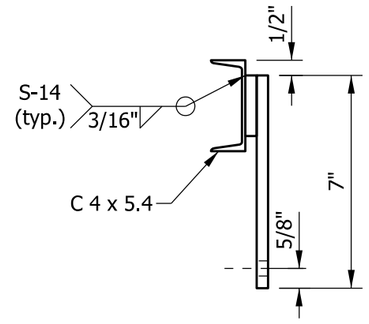

GATE LOCK

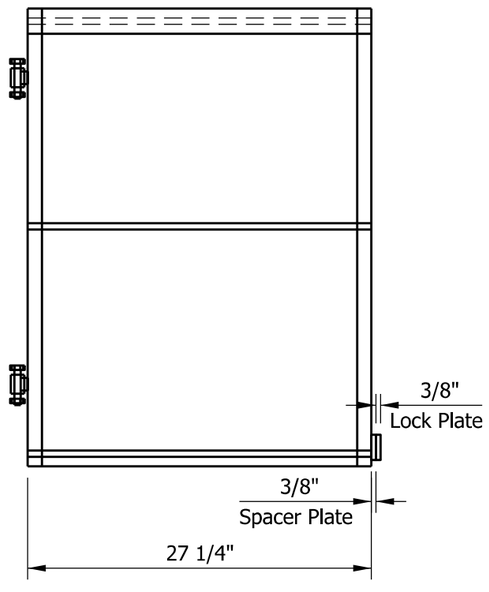

FRONT

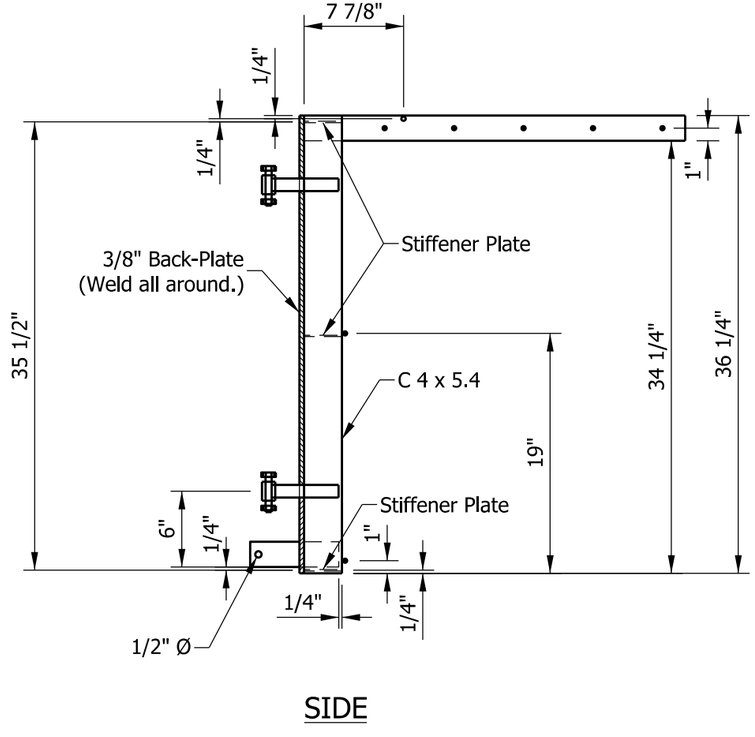

SIDE

INDIANA DEPARTMENT OF TRANSPORTATION

DYNAMIC MESSAGE SIGN STRUCTURE
SECURITY GATE DETAILS

SEPTEMBER 2022

STANDARD DRAWING NO. E 802-DMSS-15

DAVID H. BORUFF
REGISTERED
No. 60900348
STATE OF INDIANA
PROFESSIONAL ENGINEER

David H Boruff 05/17/22
DESIGN STANDARDS ENGINEER DATE

06/28/2022
CHIEF ENGINEER DATE

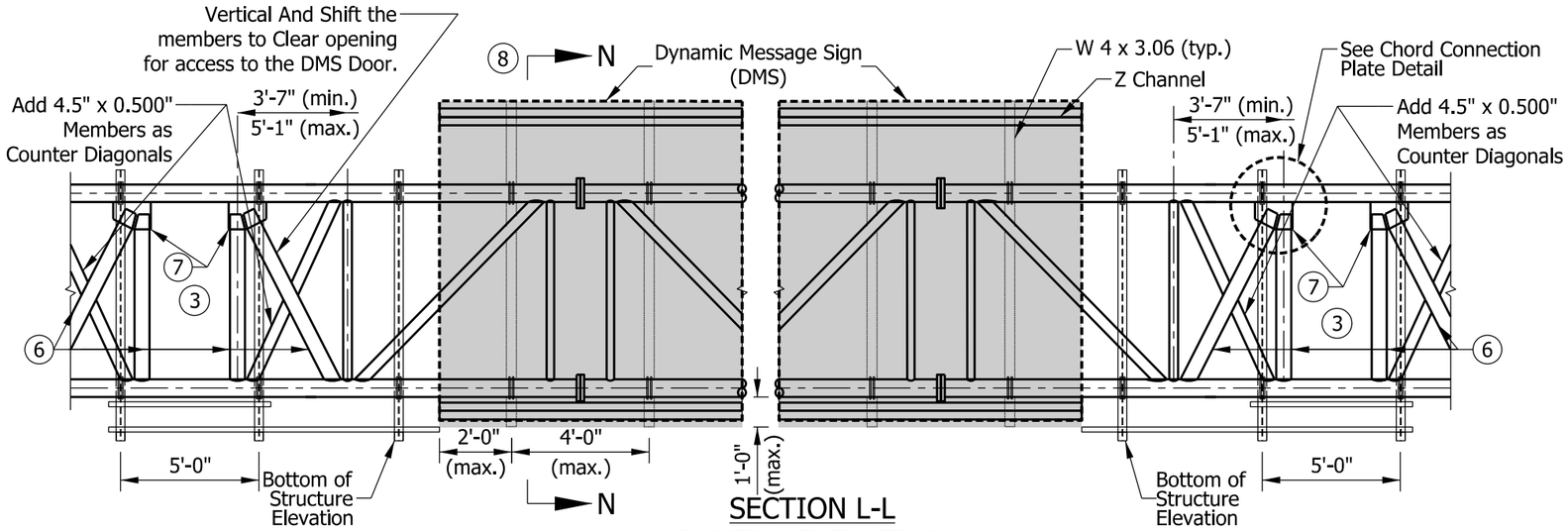

SECTION L-L
PARTIAL ELEVATION
(Handrail omitted for clarity)

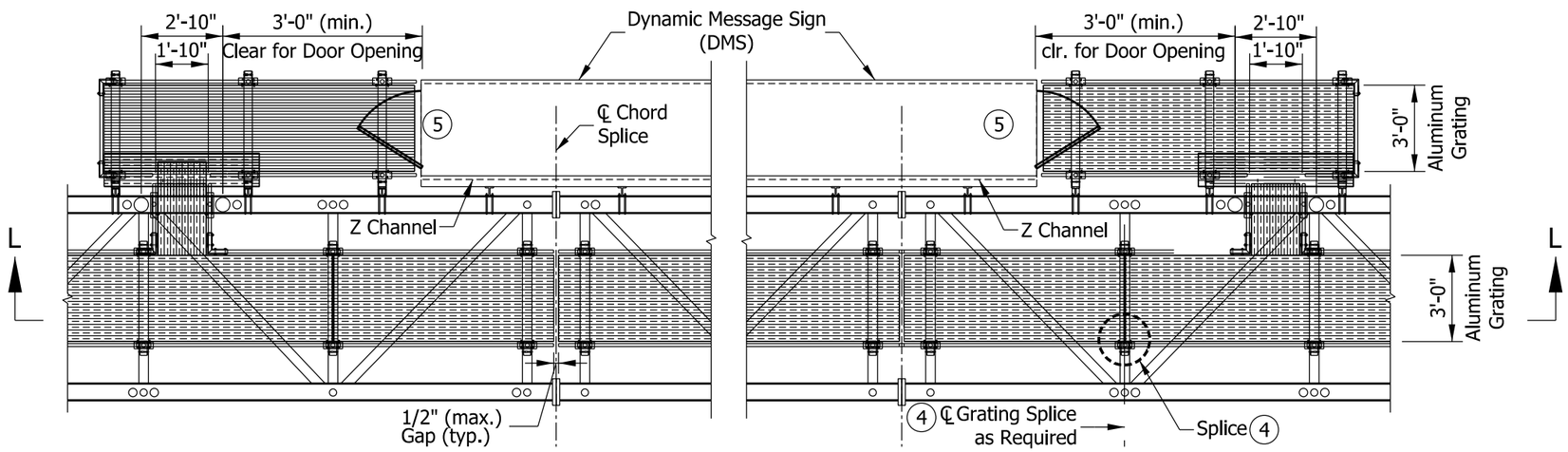

WALKWAY GRATING PLAN

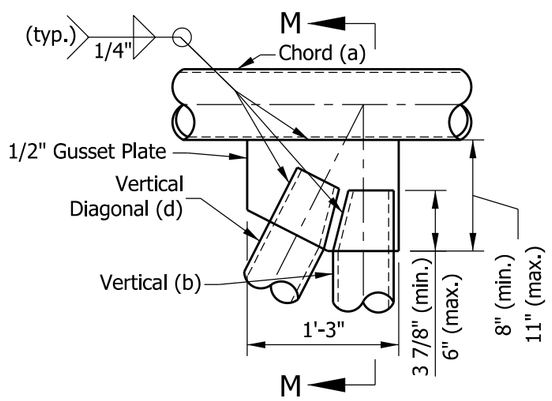

CHORD CONNECTION PLATE DETAIL (9)

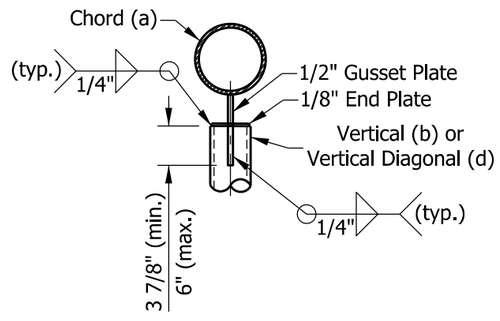

SECTION M-M

NOTES:

1. Interior walkway gratings are extruded I-bars 2 in. x ¼ in. at 1 3/16 in. center-to-center. Crossbar shall have a maximum gap of 4 in. Moment of inertia I_x = 1.382 in^4. A different grating of equal strength may be used upon approval.
2. Interior walkway grating shall run the full length center to center of end support truss members plus 9 in. at each end.
3. The contractor shall coordinate with the fabricator to determine which truss panel is to be modified to allow opening for access to the DMS door.
4. Interior walkway gratings can be spliced on center of any horizontal truss members as needed. See Standard Drawing E 802-DMSS-18 for typical grating splice detail.
5. The contractor shall coordinate with sign manufacturer so floor inside DMS is one comfortable step to the exterior grating.
6. Truss vertical and diagonal members on each side of the DMS access door shall be aluminum with 6.0 in. diameter and a minimum wall thickness 0.500 in. Counter diagonals shall be aluminum with 4.5 in. dia. and a minimum wall thickness of 0.500 in.
7. Gusset plates shall be installed at vertical and diagonal intersection on each side of the opening for access to DMS door.
8. See Standard Drawing E 802-DMSS-17 for Section N-N.
9. Vertical and horizontal members shall be clipped to maintain centerline intersection with chord. 1 in. clearance between vertical and diagonal members shall be provided.

INDIANA DEPARTMENT OF TRANSPORTATION

DYNAMIC MESSAGE SIGN STRUCTURE
WALKWAY GRATING DETAILS

SEPTEMBER 2022

STANDARD DRAWING NO. E 802-DMSS-16

DAVID H. BORUFF REGISTERED No. 60900348 STATE OF INDIANA PROFESSIONAL ENGINEER

David H Boruff 05/17/22
DESIGN STANDARDS ENGINEER DATE

06/28/2022
CHIEF ENGINEER DATE

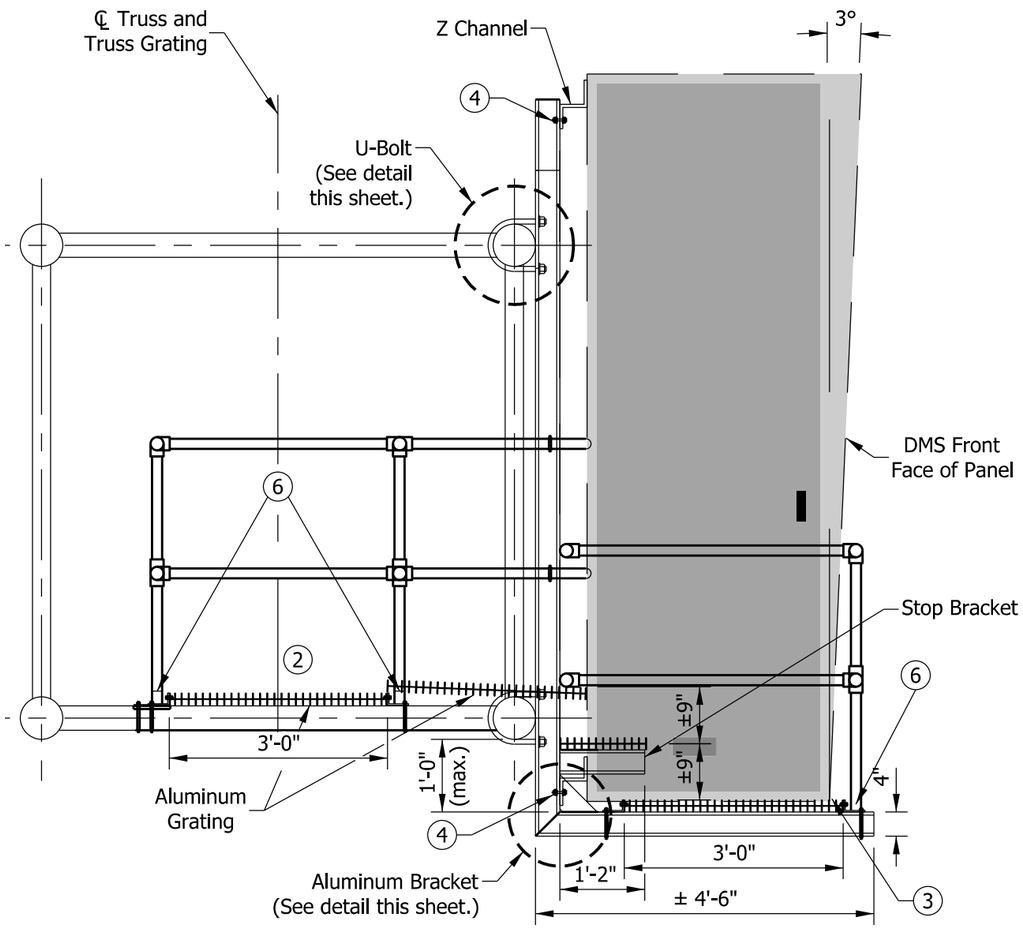

SECTION N-N

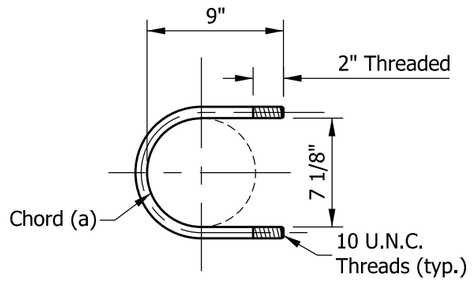

1/2" DIA. STAINLESS STEEL
U-BOLT DETAIL

NOTES:

1. The front face of the DMS shall be tilted at 3° toward approaching traffic. If the DMS is not built with the front face tilted appropriately, a block shall be placed on the top of the back face to obtain the 3° tilt.
2. The walkway grating width is nominal and may vary ±1/2 in. based on available standard widths.
3. The bottom of the DMS door shall open without obstruction from the grating.
4. (1) A-325 bolt ½ in. x 2 in. on each side of the WF (A-N) 4 x 3.06 aluminum bracket web with (1) flat washer and (1) lock nut.
5. (2) flat washers, (2) lock washers, and (2) lock nuts per U-bolt; 4 required per bracket.
6. See Typical Drain hole detail.

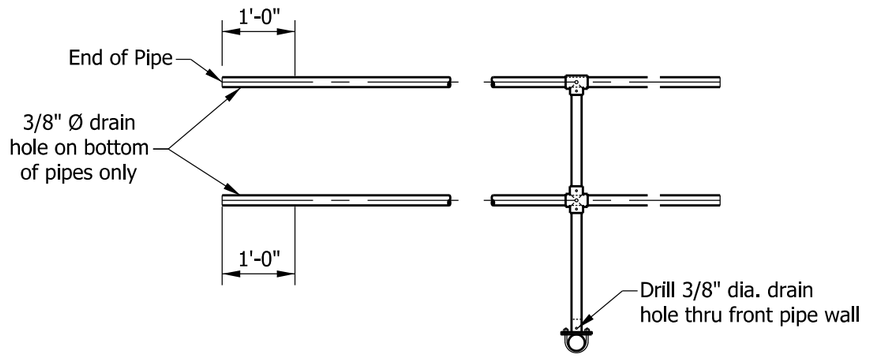

TYPICAL DRAIN HOLE DETAIL

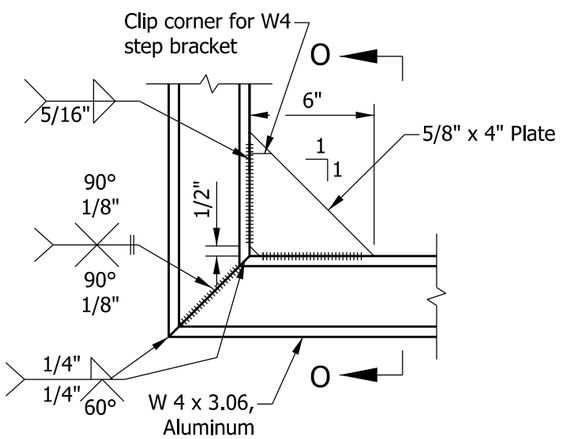

ALUMINUM BRACKET DETAIL

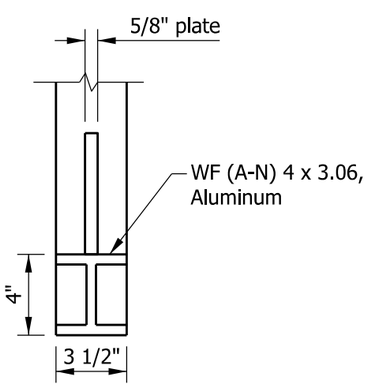

SECTION O-O

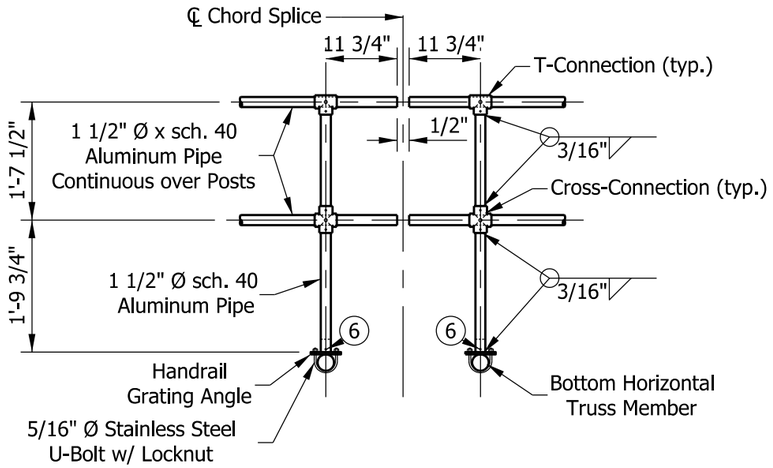

TYPICAL HANDRAIL DETAIL

INDIANA DEPARTMENT OF TRANSPORTATION

DYNAMIC MESSAGE SIGN STRUCTURE
WALKWAY GRATING DETAILS

SEPTEMBER 2022

STANDARD DRAWING NO. E 802-DMSS-17

DAVID H. BORUFF
REGISTERED
No. 60900348
STATE OF INDIANA
PROFESSIONAL ENGINEER

David H Boruff 05/17/22
DESIGN STANDARDS ENGINEER DATE

06/28/2022
CHIEF ENGINEER DATE

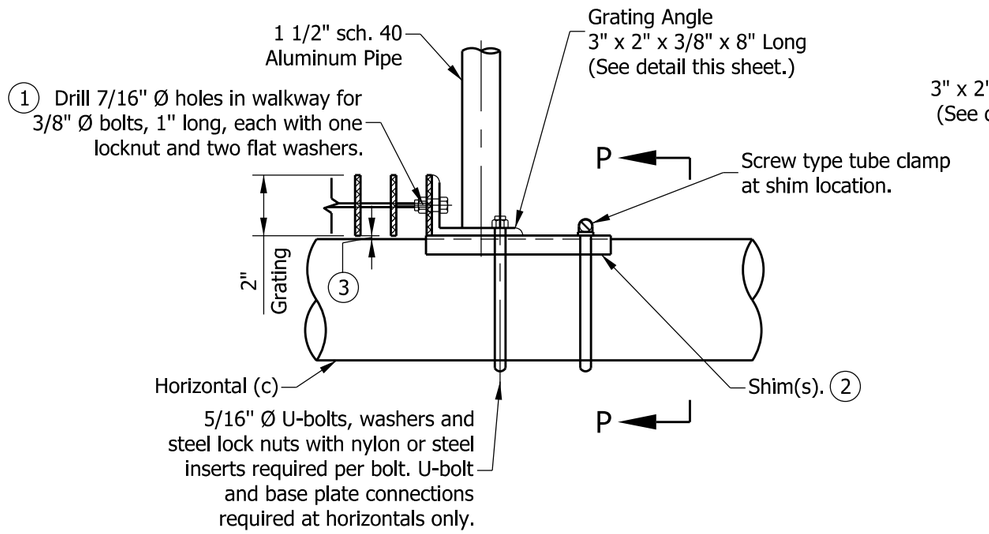

GRATING SUPPORT DETAIL

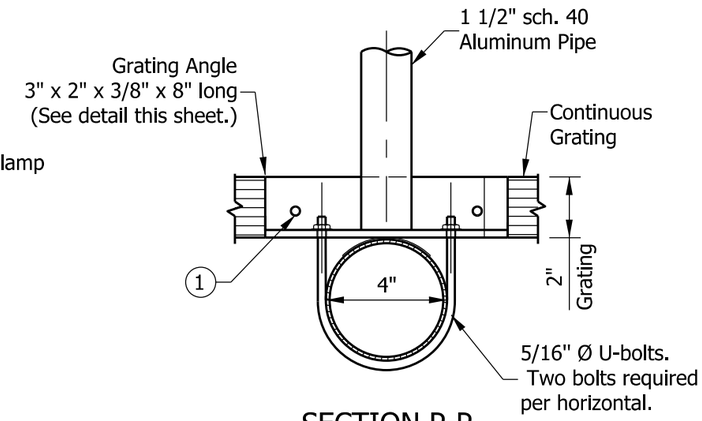

SECTION P-P

NOTES:

1. Drilling of holes in grating may be done in shop or field, based on Contractor's preference and subject to accurate alignment.
2. Shims may be placed as shown if needed to compensate for alignment variations between horizontal and diagonal pipes beyond adjustment provided by angles. Thicker shims may be used subject to shims performing properly.
3. Tube-to-grating gap may vary from 0 in. to ½ in. max. to align walkway and to allow for camber.

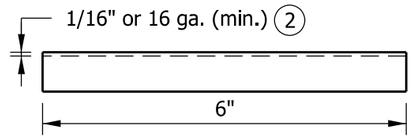

ELEVATION

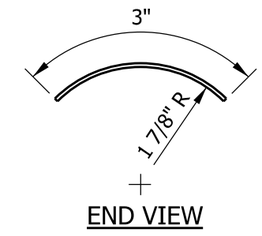

END VIEW

SHIM DETAIL

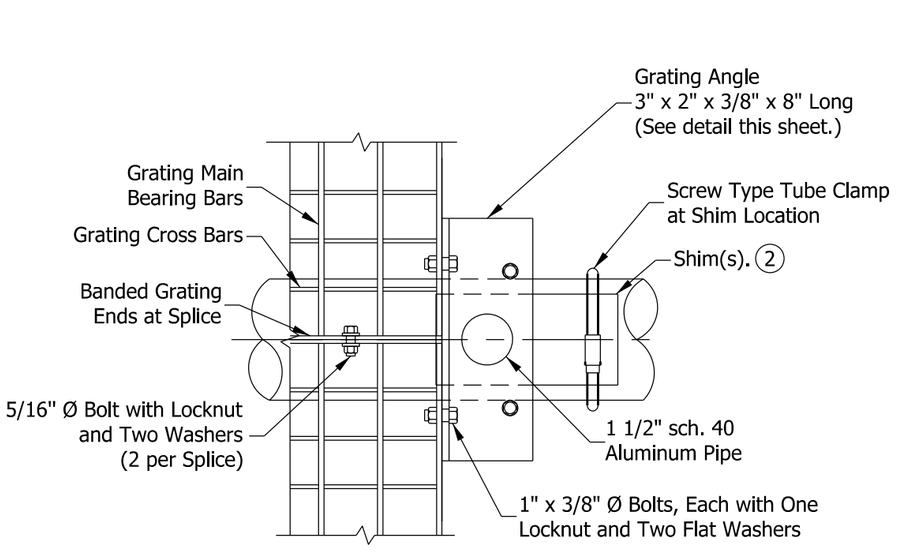

GRATING SPLICE DETAIL

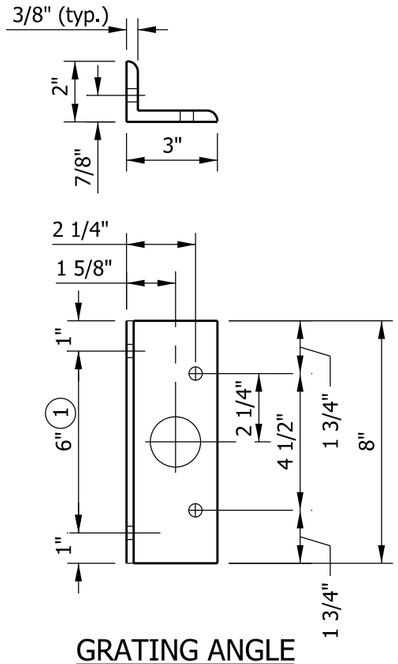

GRATING ANGLE

INDIANA DEPARTMENT OF TRANSPORTATION
DYNAMIC MESSAGE SIGN STRUCTURE WALKWAY GRATING DETAILS SEPTEMBER 2022
STANDARD DRAWING NO. E 802-DMSS-18

DAVID H. BORUFF
REGISTERED
No. 60900348
STATE OF INDIANA
PROFESSIONAL ENGINEER

David H. Boruff — 05/17/22
DESIGN STANDARDS ENGINEER — DATE

06/28/2022
CHIEF ENGINEER — DATE

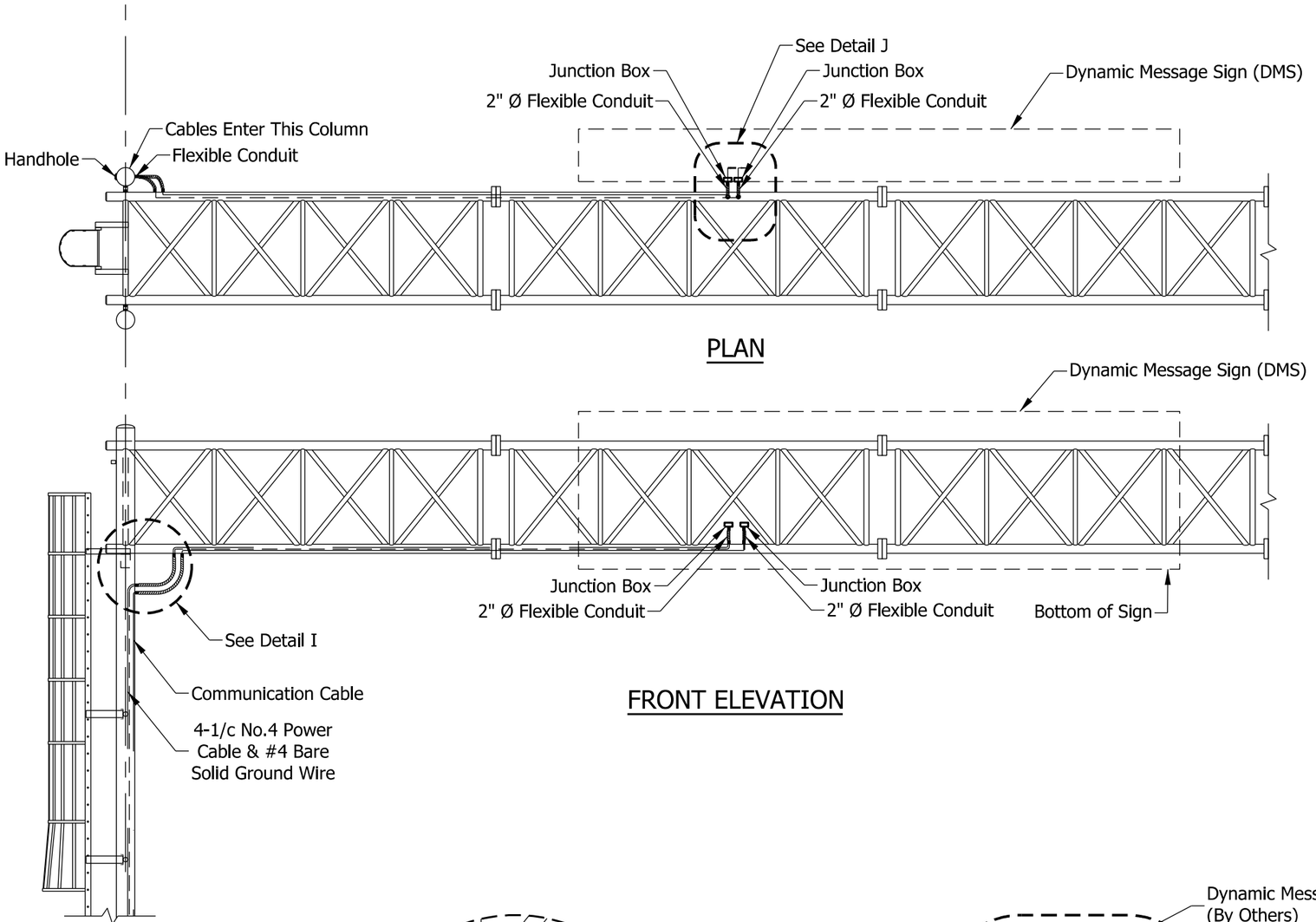

NOTES:

1. Cables shall be laid out as shown or as otherwise directed.
2. It is the Contractor's responsibility to coordinate locations of cable access with manufacturers.
3. Wire outlets shall be composed of aluminum on the chord and steel on the end support and shall have threaded-insert plug.

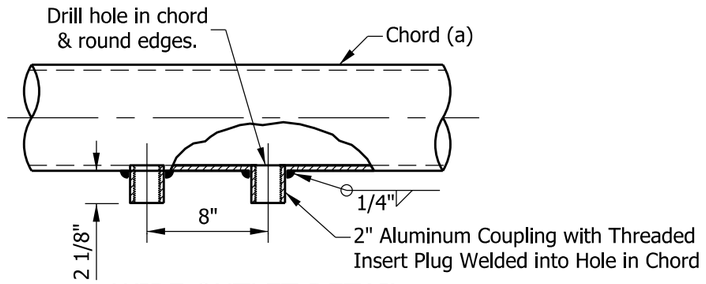

WIRE OUTLET DETAIL
PLAN VIEW

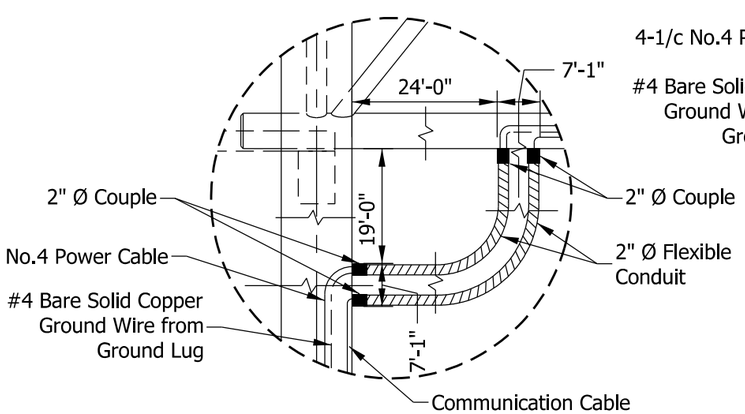

DETAIL I

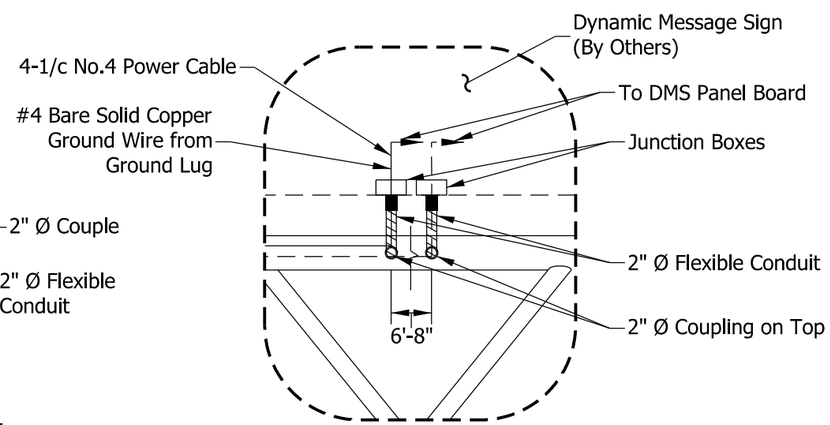

DETAIL J

INDIANA DEPARTMENT OF TRANSPORTATION

DYNAMIC MESSAGE SIGN STRUCTURE
WIRING LAYOUT DETAILS

SEPTEMBER 2022

STANDARD DRAWING NO. E 802-DMSS-19

DAVID H. BORUFF
REGISTERED
No. 60900348
STATE OF INDIANA
PROFESSIONAL ENGINEER

David H Boruff 05/17/22
DESIGN STANDARDS ENGINEER DATE

06/28/2022
CHIEF ENGINEER DATE

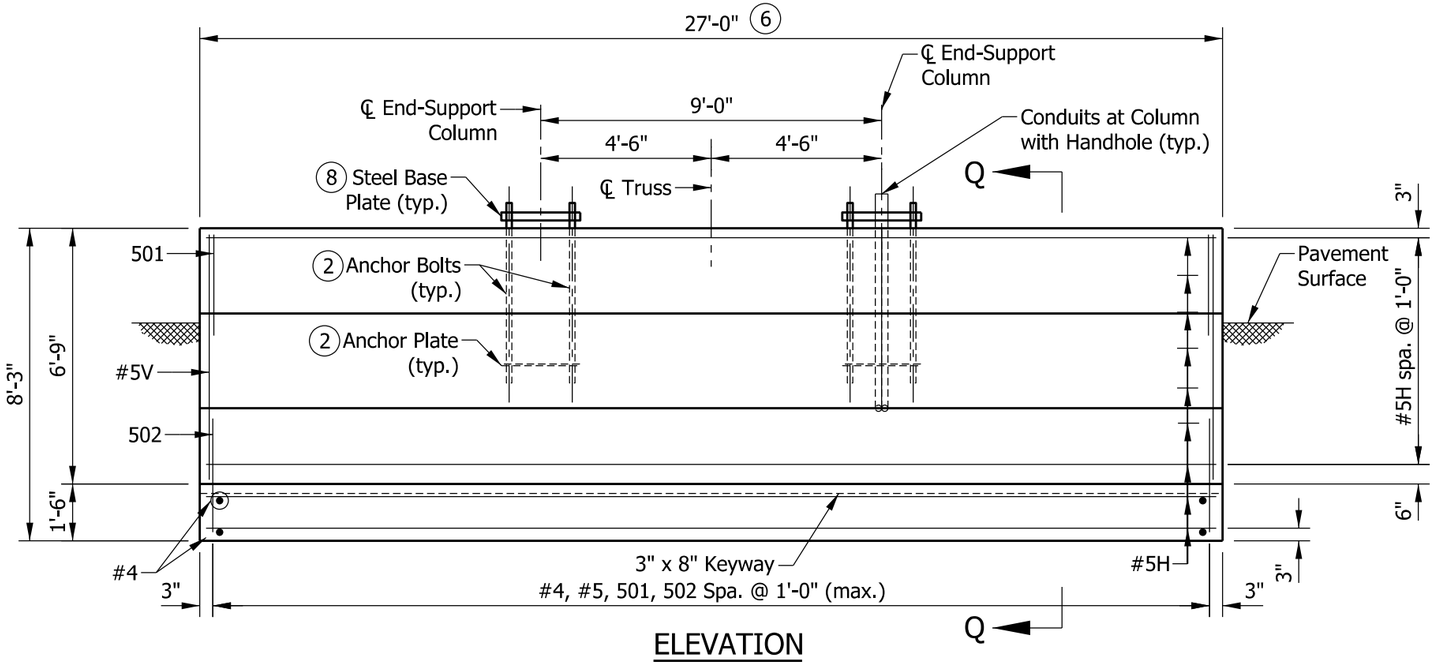

ELEVATION

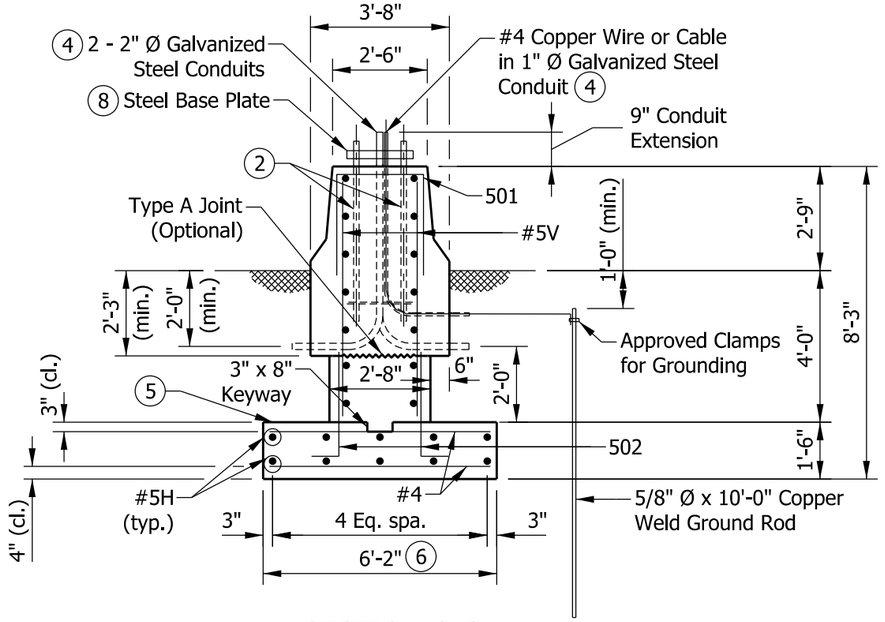

SECTION Q-Q

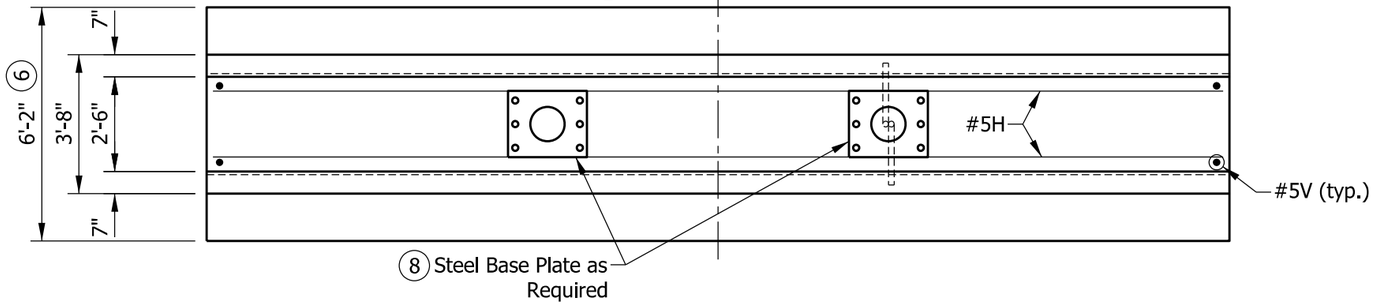

PLAN

LEGEND:

H = Horizontal

V = Vertical

NOTES:

1. See Standard Drawing E 602-CCMB-03 for barrier wall width transition.
2. See Standard Drawing E 802-DMSS-12 for anchor bolt and anchor plate details.
3. Surface seal top and sides of barrier railing to the pavement surface.
4. Thread and cap both ends of steel conduit.
5. Top of foundation shall be level.
6. For reinforcing schedule and estimated quantities, see Standard Drawing E 802-DMSS-23.
7. Top of the footing shall be a minimum of 4 ft - 0 in. below the pavement or ground surface.
8. See Standard Drawing E 802-DMSS-10 for base plate details.

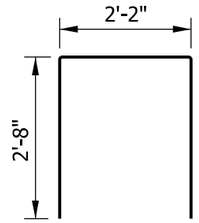

501 x 7'-6"

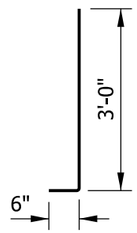

502 x 3'-6"

INDIANA DEPARTMENT OF TRANSPORTATION

DYNAMIC MESSAGE SIGN STRUCTURE
SPREAD FOUNDATION
AT 33" CONCRETE BARRIER WALL
SEPTEMBER 2022

STANDARD DRAWING NO. E 802-DMSS-20

DAVID H. BORUFF REGISTERED No. 60900348 STATE OF INDIANA PROFESSIONAL ENGINEER

David H Boruff 05/17/22
DESIGN STANDARDS ENGINEER DATE

06/28/2022
CHIEF ENGINEER DATE

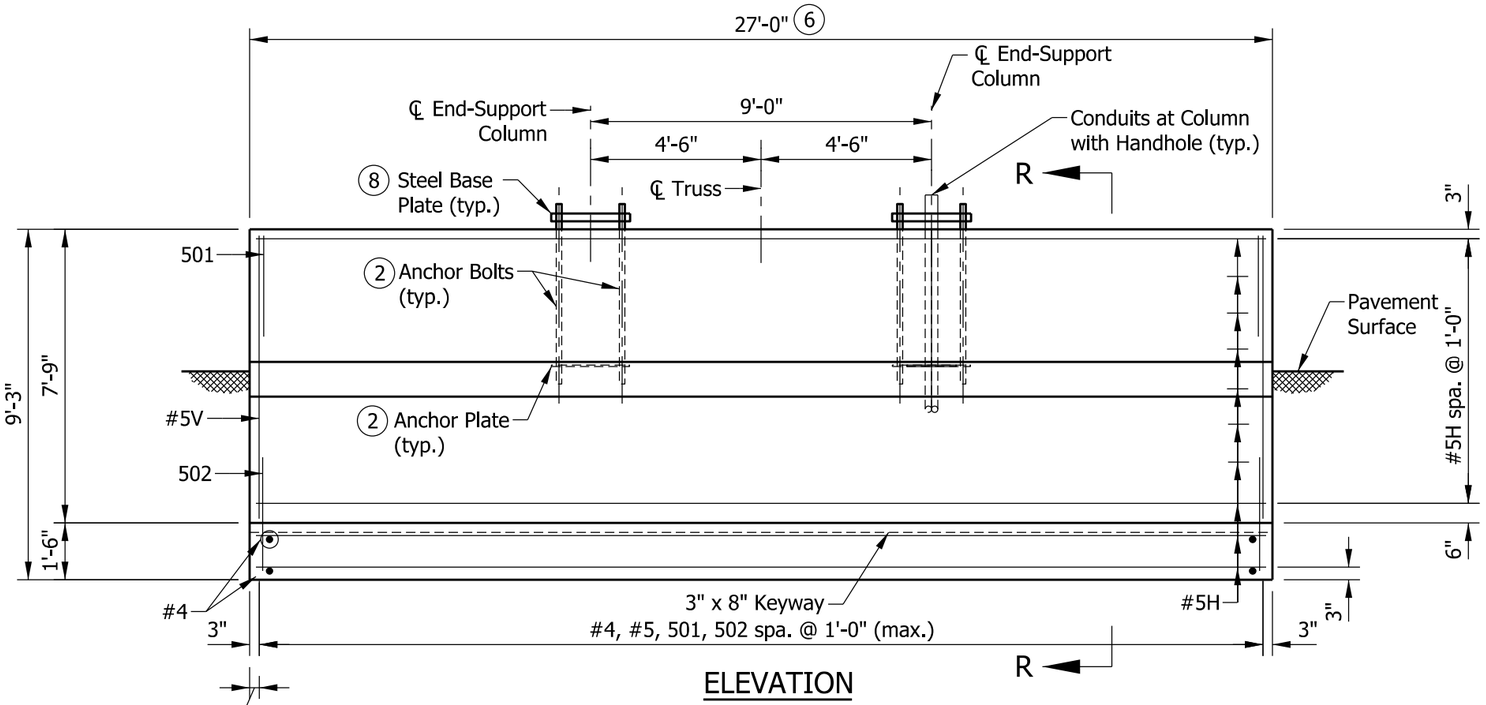

ELEVATION

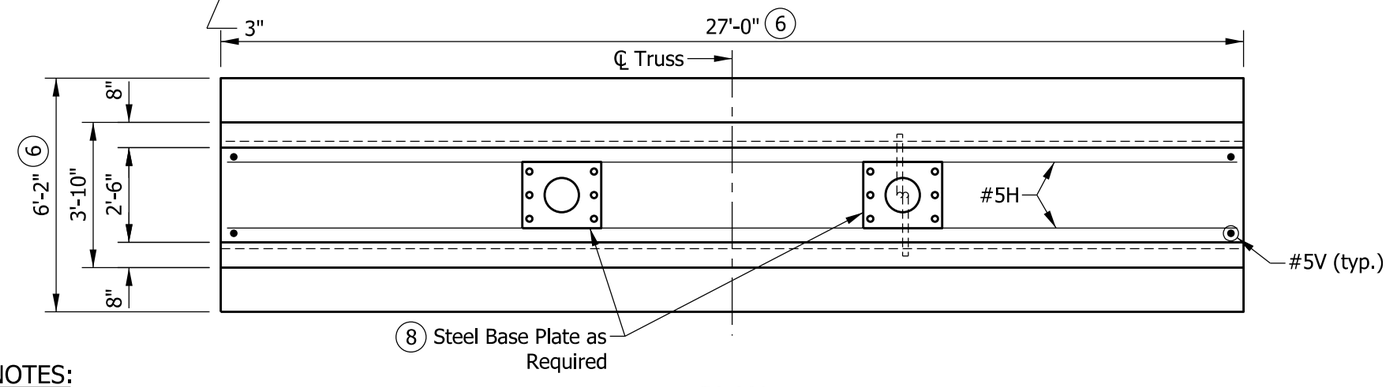

PLAN

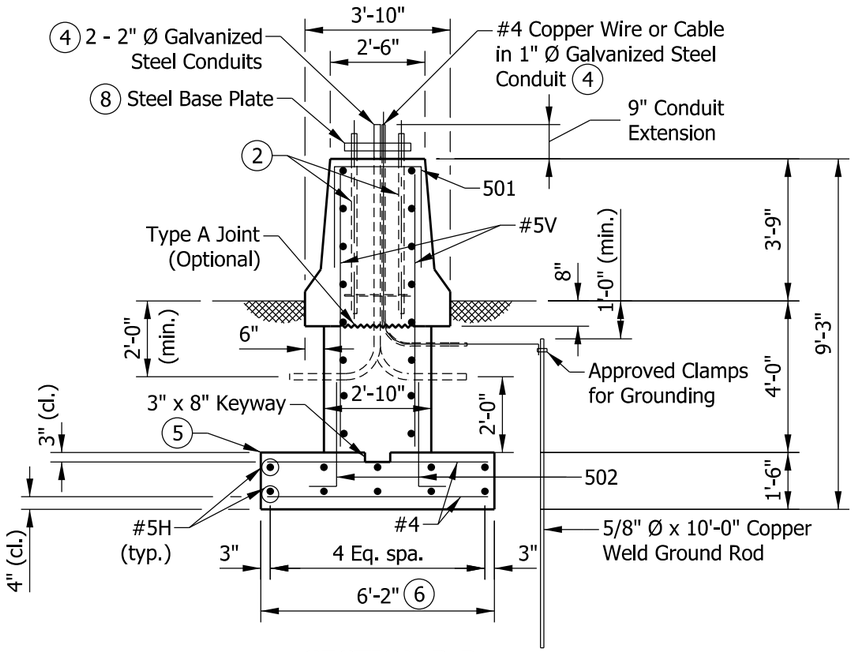

SECTION R-R

LEGEND:

H = Horizontal

V = Vertical

NOTES:

1. See Standard Drawing E 602-CCMB-03 for barrier wall width transition.
2. See Standard Drawing E 802-DMSS-12 for anchor bolt and anchor plate details.
3. Surface seal top and sides of barrier railing to the pavement surface.
4. Thread and cap both ends of steel conduit.
5. Top of foundation shall be level.
6. For reinforcing schedule and estimated quantities, see Standard Drawing E 802-DMSS-23.
7. Top of the footing shall be a minimum of 4 ft - 0 in. below the pavement or ground surface.
8. See Standard Drawing E 802-DMSS-10 for base plate details.

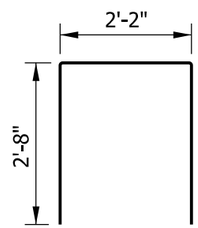

501 x 7'-6"

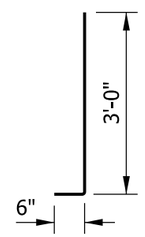

502 x 3'-6"

INDIANA DEPARTMENT OF TRANSPORTATION

DYNAMIC MESSAGE SIGN STRUCTURE
SPREAD FOUNDATION
AT 45" CONCRETE BARRIER WALL
SEPTEMBER 2022

STANDARD DRAWING NO. E 802-DMSS-21

DAVID H. BORUFF REGISTERED No. 60900348 STATE OF INDIANA PROFESSIONAL ENGINEER

David H. Boruff 05/17/22
DESIGN STANDARDS ENGINEER DATE

06/28/2022
CHIEF ENGINEER DATE

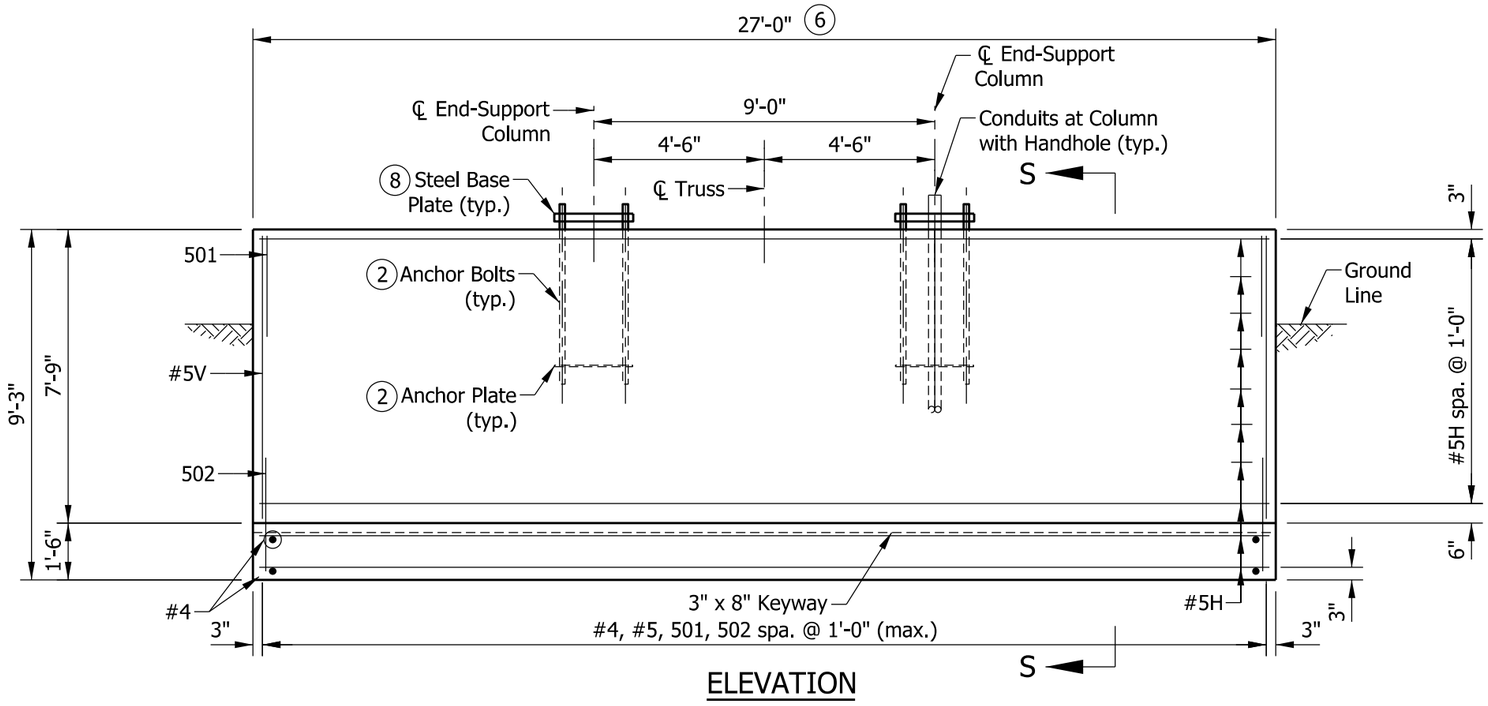

ELEVATION

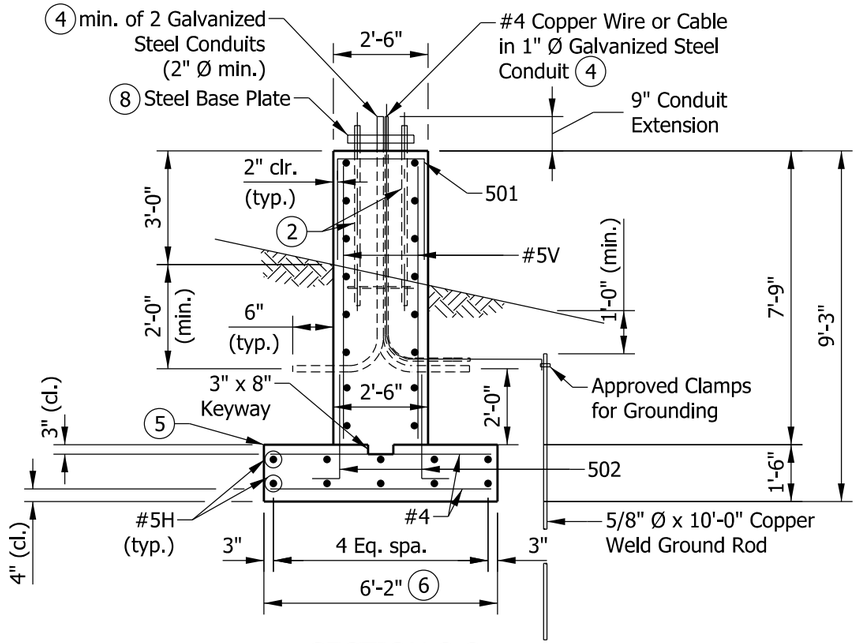

SECTION S-S

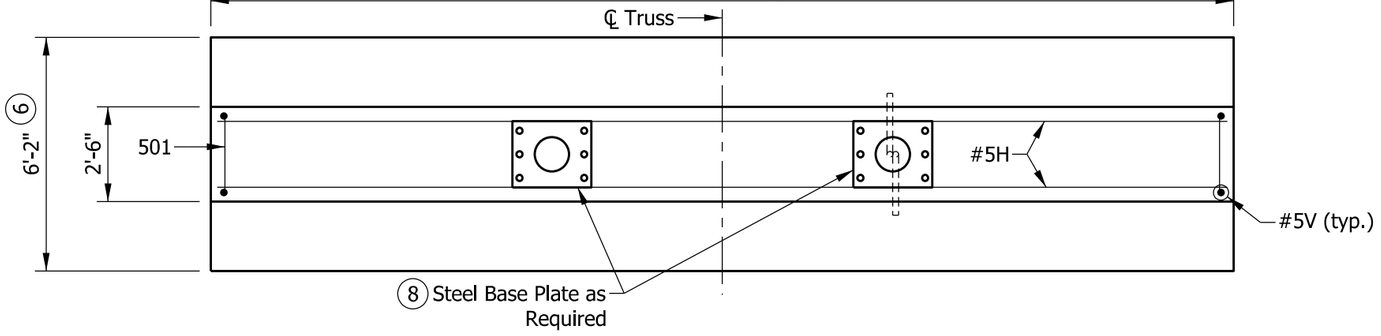

PLAN

LEGEND:

H = Horizontal

V = Vertical

NOTES:

1. See Standard Drawing E 602-CCMB-03 for barrier wall width transition.
(2) See Standard Drawing E 802-DMSS-12 for anchor bolt and anchor plate details.
3. Surface seal top and sides of barrier railing to the pavement surface.
(4) Thread and cap both ends of steel conduit.
(5) Top of foundation shall be level.
(6) For reinforcing schedule and estimated quantities, see Standard Drawing E 802-DMSS-23.
7. Top of the footing shall be a minimum of 4 ft - 0 in. below the pavement or ground surface.
(8) See Standard Drawing E 802-DMSS-10 for base plate details.

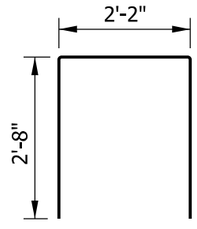

501 x 7'-6"

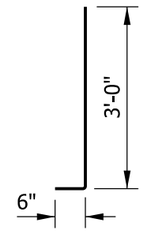

502 x 3'-6"

INDIANA DEPARTMENT OF TRANSPORTATION

DYNAMIC MESSAGE SIGN STRUCTURE
SPREAD FOUNDATION
AT MEDIAN OR SHOULDER, 36" HEIGHT
SEPTEMBER 2022

STANDARD DRAWING NO. E 802-DMSS-22

DAVID H. BORUFF REGISTERED No. 60900348 STATE OF INDIANA PROFESSIONAL ENGINEER

David H Boruff 05/17/22
DESIGN STANDARDS ENGINEER DATE

06/28/2022
CHIEF ENGINEER DATE

SPREAD FOUNDATIONS BILL OF MATERIALS

TYPE OF BARRIER	#4		#5H		#5V		501		502		TOTAL EPOXY COATED REINFORCING BARS (LBS)	CONCRETE CLASS A (CYS)	SURFACE SEAL (SYS)
	NO. BARS	LENGTH	NO. BARS	LENGTH	NO. BARS	LENGTH	NO. BARS	LENGTH	NO. BARS	LENGTH			
33" Concrete Barrier	56	5'-8"	24	26'-8"	56	6'-6"	28	7'-6"	56	3'-6"	1685	30.1	24.8
45" Concrete Barrier	56	5'-8"	26	26'-8"	56	7'-6"	28	7'-6"	56	3'-6"	1799	32.3	30.9
36" Median or Shoulder Barrier	56	5'-8"	26	26'-8"	56	7'-6"	28	7'-6"	56	3'-6"	1799	28.7	25.5

NOTES:

1. If Allowable Gross Soil Bearing Pressure is less than 1500 psf, a drilled shaft or other special foundation shall be used.
2. See Standard Drawings E 802-DMSS-20 through 22 for locations of dimensions and reinforcing bars.

INDIANA DEPARTMENT OF TRANSPORTATION

DYNAMIC MESSAGE SIGN STRUCTURE
SPREAD FOUNDATIONS QUANTITIES

SEPTEMBER 2022

STANDARD DRAWING NO. E 802-DMSS-23

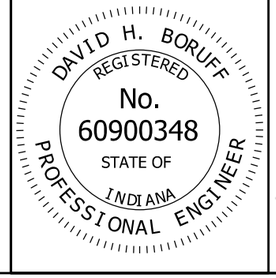

David H Boruff 05/17/22
DESIGN STANDARDS ENGINEER DATE

06/28/2022
CHIEF ENGINEER DATE

INDEX

SHEET NO.	SUBJECT
1	Sign Box Structure Drawing Index
2	Plan, Elevation, & End Support
3	A-E Truss Sections in isometric views, Table with Member Sizes
4	F-H Truss Sections in isometric views, Table with Member Sizes
5	Table of Dimensions, Spans 34' thru 81'
6	Table of Dimensions, Spans 82' thru 130' and Camber
7	Table of Dimensions, Spans 131' thru 154' and Camber
8	Chord Connections and Weld Details
9	Flange, Chord End Plate, and Wire Outlet Details
10	End Support Upper Chord Connection Details
11	End Support Lower Chord Connection Details
12	End Support Lower Chord Connection details, Alternate HSS Beam
13	End Support and Base Plate
14	I.D. Plate Details
15	End Support Top Cap, Handhole, and J-Hook Details
16	End Support Anchor Bolt and Metal Skirt Details
17	End Support Anchor Bolt Hardware Tightening
18	Interior Walkway Grating & Handrail Details
19	Interior Walkway Grating Details
20	Lighting Walkway Elevation
21	Lighting Walkway Plan
22	Lighting Walkway Profile
23	Lighting Walkway and Handrail Assembly
24	Lighting Walkway, Handrail Hinge, and Grating Details
25	Lighting Walkway Fixture Mount Details
26	A-E Spread Foundation at 33" Concrete Barrier Wall
27	A-E Spread Foundation at 45" Concrete Barrier Wall
28	A-E Spread Foundation for Median or Shoulder, 36" Height
29	A-E Spread Foundations Quantities
30	A-E Alternate Drilled Shaft Foundation at 33" Concrete Barrier Wall
31	A-E Alternate Drilled Shaft Foundation at 45" Concrete Barrier Wall
32	A-E Alternate Drilled Shaft Foundation for Median or Shoulder, 36" Height
33	A-E Alternate Drilled Shaft Foundations Quantities
34	F,G,H Spread Foundation at 33" Concrete Barrier Wall
35	F,G,H Spread Foundation at 45" Concrete Barrier Wall
36	F,G,H Spread Foundation for Median or Shoulder, 36" Height
37	F,G,H Spread Foundations Quantities
38	F,G,H Alternate Drilled Shaft Foundation at 33" Concrete Barrier Wall
39	F,G,H Alternate Drilled Shaft Foundation at 45" Concrete Barrier Wall
40	F,G,H Alternate Drilled Shaft Foundation for Median or Shoulder, 36" Height
41	F,G,H Alternate Drilled Shaft Foundations Quantities

INDIANA DEPARTMENT OF TRANSPORTATION

SIGN BOX TRUSS STRUCTURE
INDEX

SEPTEMBER 2022

STANDARD DRAWING NO. E 802-SBTS-01

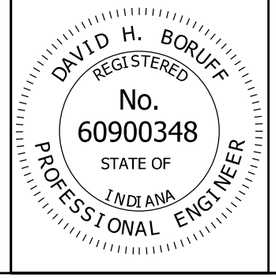

David H Boruff 5/17/22
DESIGN STANDARDS ENGINEER DATE

07/07/2022
CHIEF ENGINEER DATE

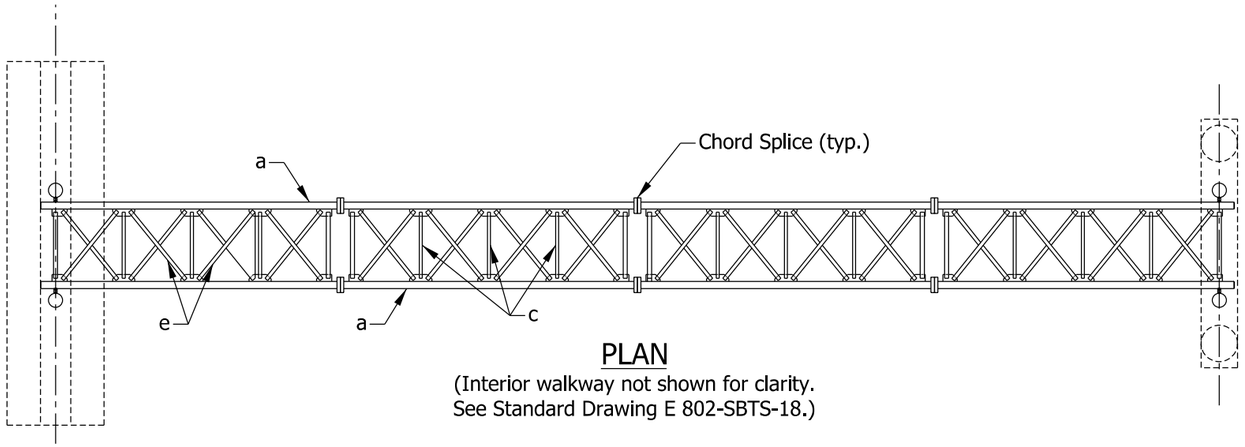

PLAN

(Interior walkway not shown for clarity.
See Standard Drawing E 802-SBTS-18.)

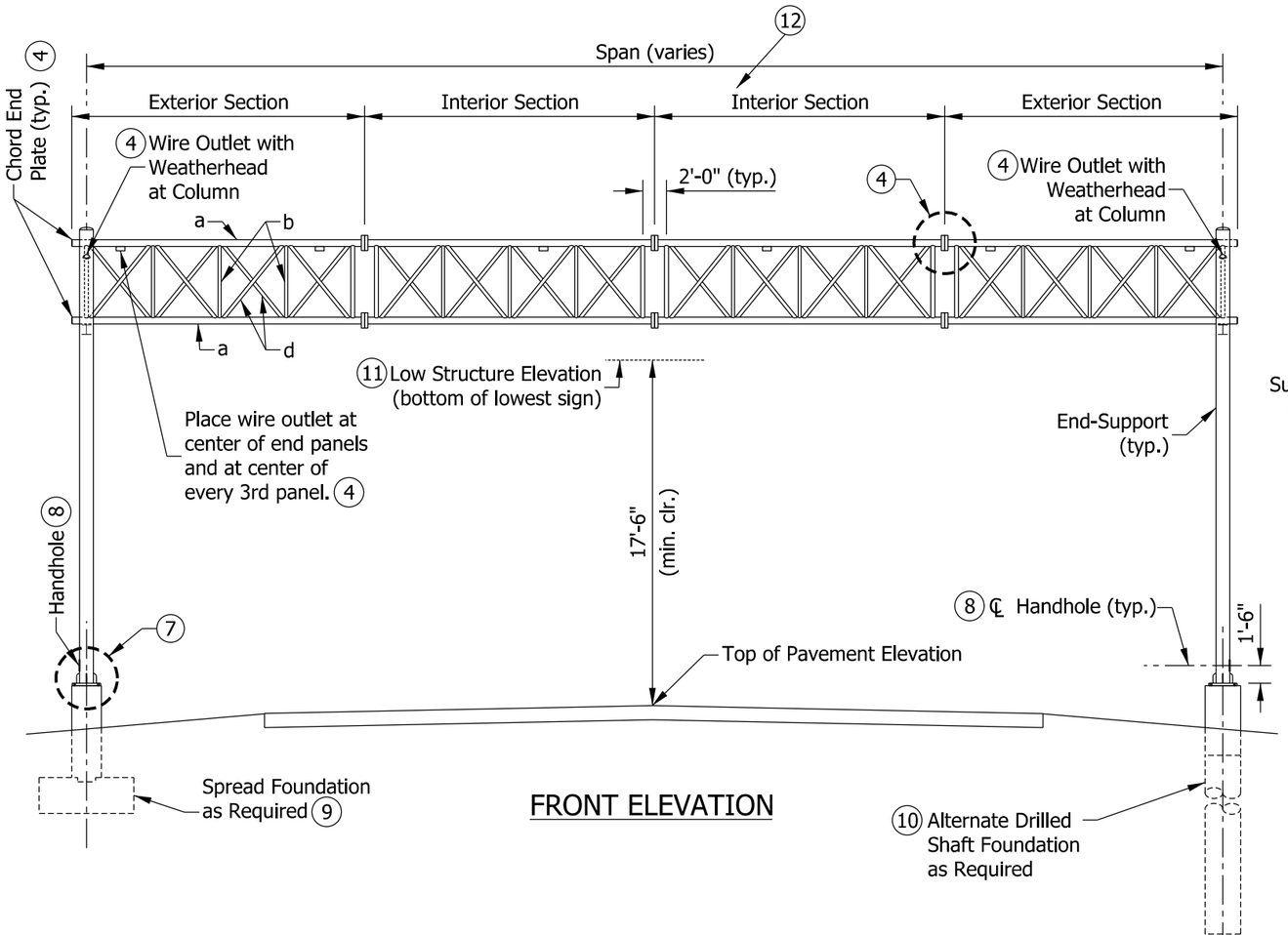

FRONT ELEVATION

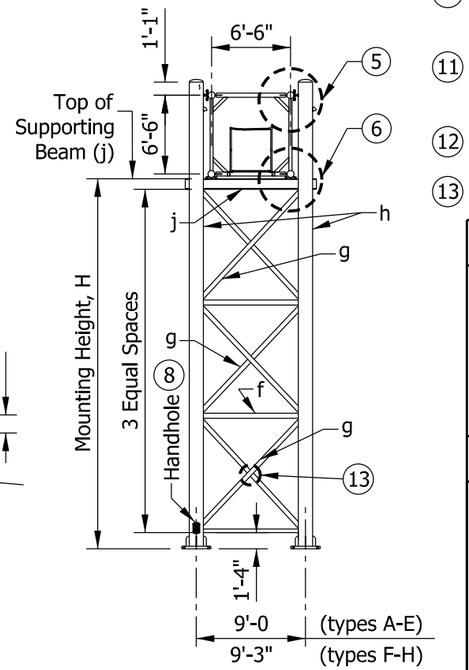

END-SUPPORT

LEGEND

TRUSS MEMBERS
- a - Chords
- b - Verticals
- c - Horizontals
- d - Vertical Diagonals
- e - Horizontal Diagonals

END-SUPPORT MEMBERS
- f - Horizontals
- g - Diagonals
- h - Columns
- j - Supporting Beam

NOTES:

1. See Standard Drawings E 802-SBTS-03 and 04 for structure types and member sizes.
2. Maximum deviation of any chord from a straight line in any section shall be ⅛ in. for box truss to be a maximum of ⅜ in. out of a straight line over the entire length of the structure in the vertical plane.
3. All truss members shall be aluminum. End-support members shall be steel. Walkways, bearing elements, and wire outlet shall be aluminum.

(4) See Standard Drawings E 802-SBTS-08 and 09 for chord connection, chord end plate, and wire outlet details.

(5) See Standard Drawing E 802-SBTS-10 for upper chord connection details and E 802-SBTS-15 for the top cap and J hook details.

(6) See Standard Drawing E 802-SBTS-11 for lower chord connection details. See Standard Drawing E 802-SBTS-12 for lower chord connection details with alternate HSS beam.

(7) See Standard Drawing E 802-SBTS-13 for base plate detail and Standard Drawing E-802-SBTS-16 for anchor bolts and skirt details.

(8) See Standard Drawing E 802-SBTS-15 for handhole details.

(9) See Standard Drawings E 802-SBTS-26 through 29 and 34 through 37 for spread foundation details.

(10) See Standard Drawings E 802-SBTS-30 through 33 and 38 through 41 for alternate drilled shaft foundation details.

(11) The 17 ft - 6 in. minimum clearance shall be to the lighting walkway if provided.

(12) See E 802-SBST-05 thru 07 for the number of Interior Sections.

(13) See E 802-SBTS-13 for diagonal crossing detail.

INDIANA DEPARTMENT OF TRANSPORTATION

SIGN BOX TRUSS STRUCTURE PLAN, ELEVATION, & END SUPPORT

SEPTEMBER 2022

STANDARD DRAWING NO. E 802-SBTS-02

DAVID H. BORUFF REGISTERED No. 60900348 STATE OF INDIANA PROFESSIONAL ENGINEER

5/17/22
DESIGN STANDARDS ENGINEER DATE

07/07/2022
CHIEF ENGINEER DATE

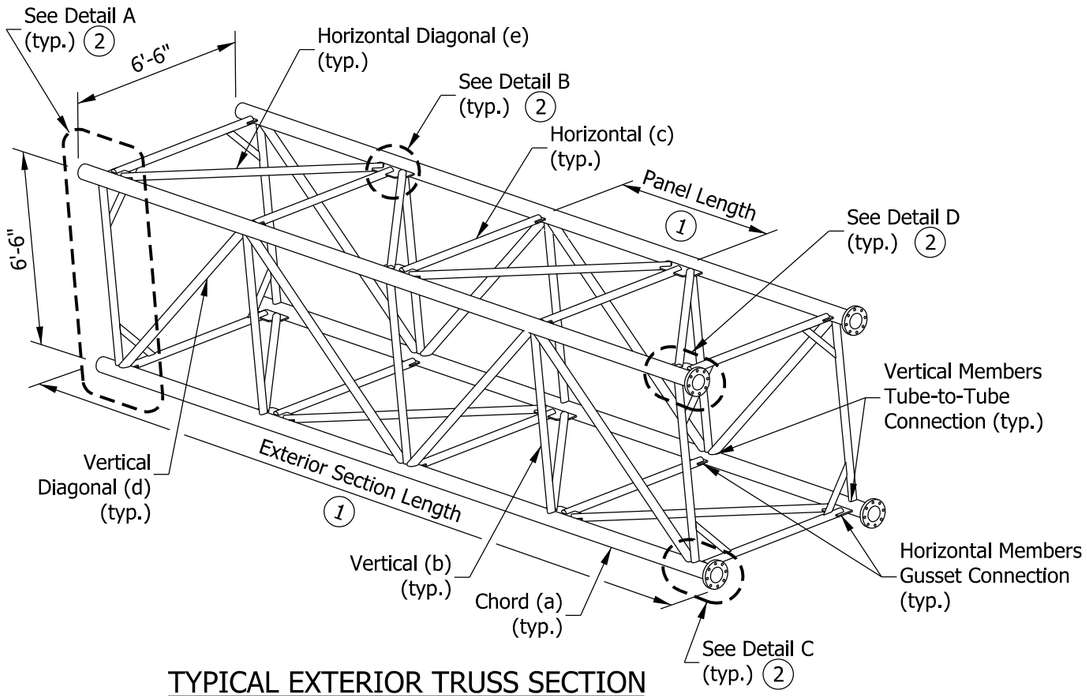

TYPICAL EXTERIOR TRUSS SECTION

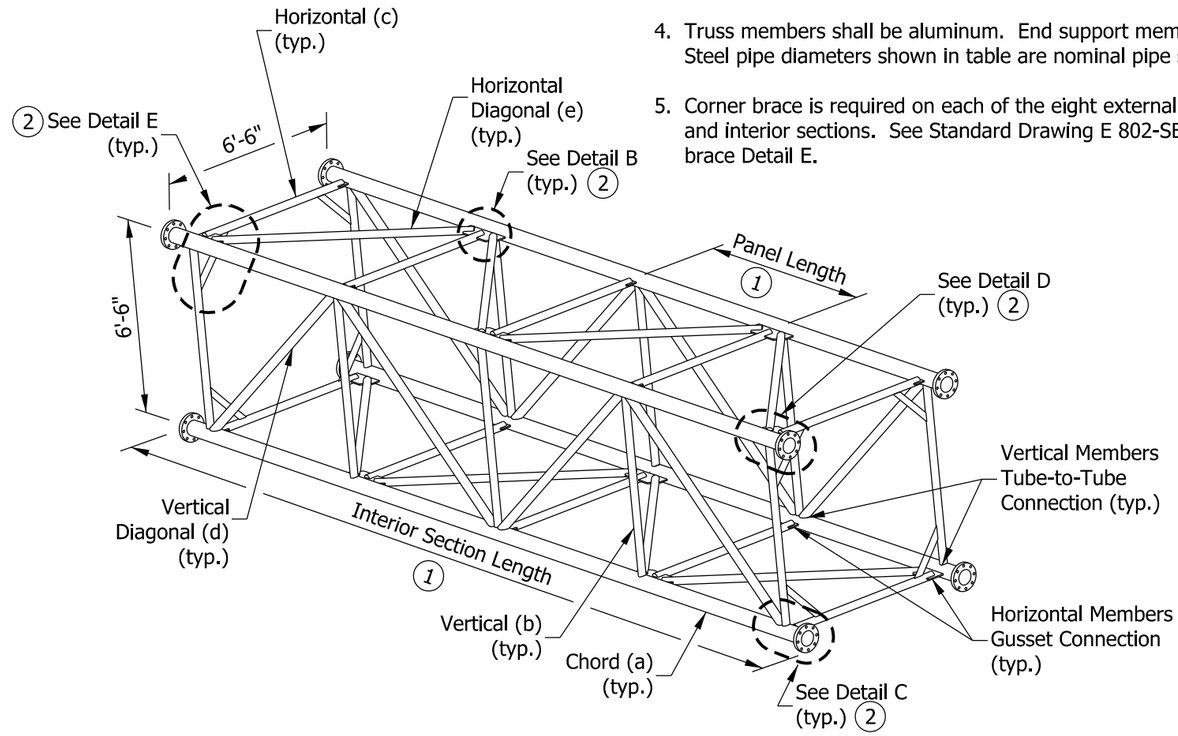

TYPICAL INTERIOR TRUSS SECTION

NOTES:

(1) Number of panels and sections varies. See table on Standard Drawings E 802-SBTS - 05 and 06 for recommended dimensions.

(2) See Standard Drawing E 802-SBTS-08 for chord connection details.

3. See Standard Drawing E 802-SBTS-02 for Legend.

4. Truss members shall be aluminum. End support members shall be steel. Steel pipe diameters shown in table are nominal pipe size.

5. Corner brace is required on each of the eight external corners of exterior and interior sections. See Standard Drawing E 802-SBTS-08 for corner brace Detail E.

TRUSS TYPE	MAX. SIGN AREA	MAX. SPAN	MAX. MOUNTING HEIGHT	TRUSS MEMBERS, ALUMINUM										END-SUPPORT MEMBERS, STEEL						
				CHORD		VERTICAL		HORIZONTAL		VERTICAL DIAGONAL		HORIZONTAL DIAGONAL		HORIZONTAL		DIAGONAL		COLUMN		SUPPORTING BEAM
			H	a		b		c		d		e		f		g		h		j
				DIA.	THK	DIA.	THK	DIA.	THK	DIA.	THK	DIA.	THK	DIA.	THK	DIA.	THK	DIA.	THK	
	SQ. FT.	FT.	FT.	IN.	IN.	IN.	IN.	IN.	IN.	IN.	IN.	IN.	IN.	IN.	IN.	IN.	IN.	IN.	IN.	
A	500	130	28'-6"	6.50	0.375	3.00	0.375	4.00	0.188	3.00	0.500	4.00	0.375	5.00	0.375	8.00	0.500	14.00	0.500	W 8 x 58 or HSS 8" x 8" x 1/2"
B	700	100	28'-6"	6.50	0.375	3.00	0.375	4.00	0.188	3.00	0.500	4.00	0.375	5.00	0.375	8.00	0.322	14.00	0.500	
C	600	130	28'-6"	7.00	0.375	3.00	0.375	4.00	0.188	3.00	0.500	4.00	0.500	5.00	0.375	8.00	0.500	14.00	0.593	
D	900	100	28'-6"	7.00	0.375	3.00	0.375	4.00	0.188	3.00	0.500	4.00	0.500	5.00	0.375	8.00	0.593	18.00	0.500	
E	800	130	28'-6"	7.00	0.500	3.00	0.375	4.00	0.250	3.00	0.500	4.00	0.500	5.00	0.375	8.00	0.593	18.00	0.562	W 10 x 68 or HSS 10" x 10" x 1/2"

INDIANA DEPARTMENT OF TRANSPORTATION

SIGN BOX TRUSS STRUCTURE A-E
TRUSS SECTIONS IN ISOMETRIC VIEWS,
TABLE WITH MEMBER SIZES
SEPTEMBER 2022

STANDARD DRAWING NO. E 802-SBTS-03

DAVID H. BORUFF
REGISTERED
No. 60900348
STATE OF INDIANA
PROFESSIONAL ENGINEER

David H Boruff 5/17/22
DESIGN STANDARDS ENGINEER DATE

07/07/2022
CHIEF ENGINEER DATE

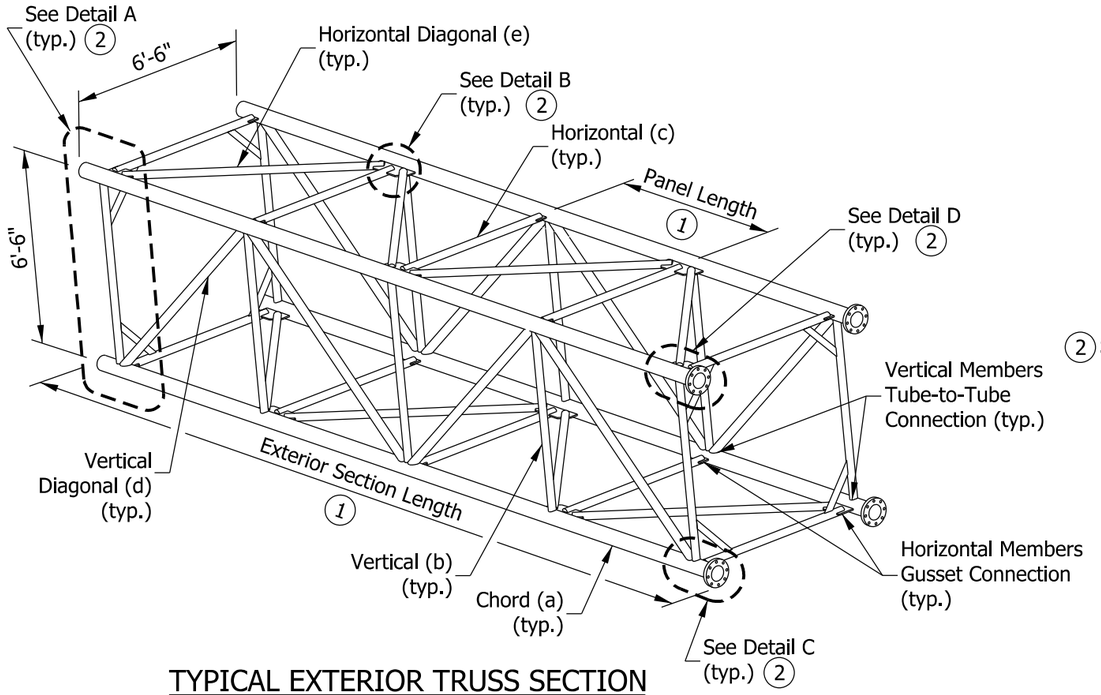

TYPICAL EXTERIOR TRUSS SECTION

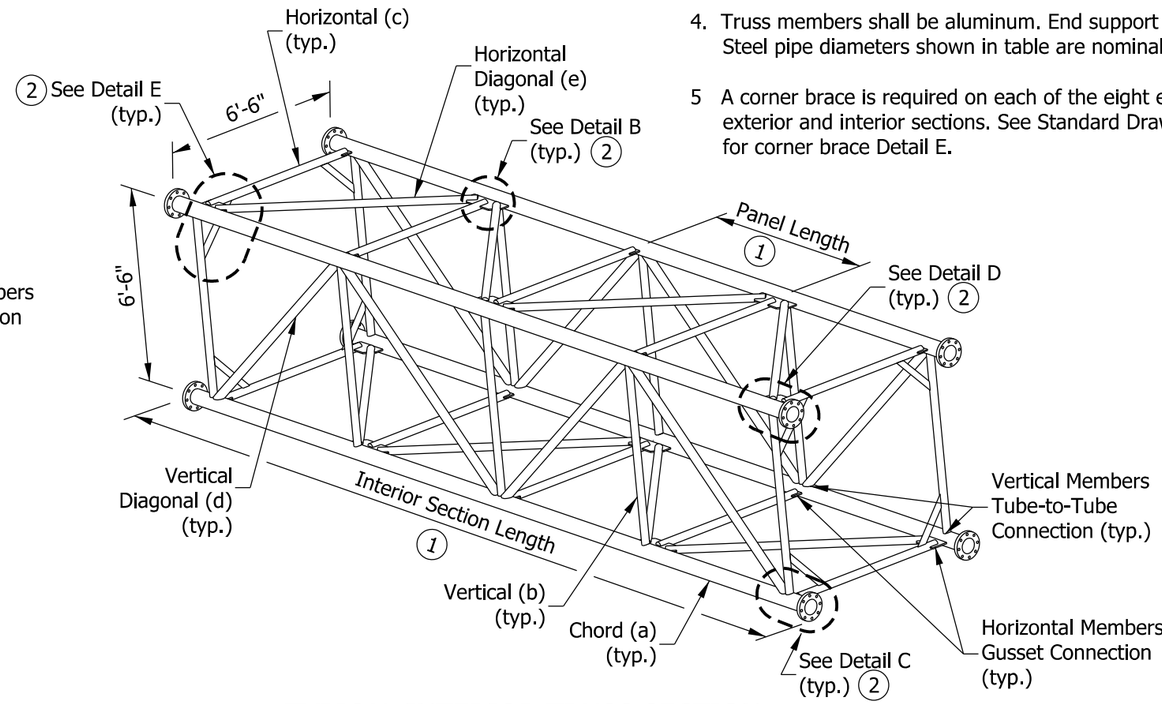

TYPICAL INTERIOR TRUSS SECTION

NOTES:

(1) Number of panels and sections varies. See table on Standard Drawings E 802-SBTS-05, 06, & 07 for recommended dimensions.

(2) See Standard Drawing E 802-SBTS-08 for chord connections and details.

3. See Standard Drawing E 802-SBTS-02 for Legend.

4. Truss members shall be aluminum. End support members to be steel. Steel pipe diameters shown in table are nominal pipe size.

5 A corner brace is required on each of the eight external corners of exterior and interior sections. See Standard Drawing E 802-SBTS-08 for corner brace Detail E.

TRUSS TYPE	MAX. SIGN AREA	MAX. SPAN	MAX. MOUNTING HEIGHT	TRUSS MEMBERS, ALUMINUM										END-SUPPORT MEMBERS, STEEL						
				CHORD		VERTICAL		HORIZONTAL		VERTICAL DIAGONAL		HORIZONTAL DIAGONAL		HORIZONTAL		DIAGONAL		COLUMN		SUPPORTING BEAM
			H	a		b		c		d		e		f		g		h		j
				DIA.	THK	DIA.	THK	DIA.	THK	DIA.	THK	DIA.	THK	DIA.	THK	DIA.	THK	DIA.	THK	
	SQ. FT.	FT.	FT.	IN.	IN.	IN.	IN.	IN.	IN.	IN.	IN.	IN.	IN.	IN.	IN.	IN.	IN.	IN.	IN.	
F	1200	130	28'-6"	7.50	0.500	3.00	0.375	4.00	0.375	3.00	0.500	4.00	0.500	5.00	0.375	8.00	0.593	18.00	0.562	W 10 x 68 or HSS 10" x 10" x 1/2"
G	1200	142	28'-6"	9.00	0.500	4.00	0.375	4.00	0.375	4.00	0.500	4.00	0.500	5.00	0.375	8.00	0.593	18.00	0.562	
H	1200	154	28'-6"	10.00	0.500	4.00	0.500	4.00	0.375	4.00	0.500	4.00	0.500	8.00	0.322	8.00	0.593	18.00	0.562	

INDIANA DEPARTMENT OF TRANSPORTATION

SIGN BOX TRUSS STRUCTURE F-H
TRUSS SECTIONS IN ISOMETRIC VIEWS,
TABLE WITH MEMBER SIZES

SEPTEMBER 2022

STANDARD DRAWING NO. E 802-SBTS-04

DAVID H. BORUFF
REGISTERED
No. 60900348
STATE OF INDIANA
PROFESSIONAL ENGINEER

David H. Boruff 5/17/22
DESIGN STANDARDS ENGINEER DATE

07/07/2022
CHIEF ENGINEER DATE

DIMENSIONS FOR SIGN BOX TRUSSES (34' THRU 81')

SPAN	EXTERIOR SECTIONS					INTERIOR SECTIONS			
SPAN-TRUSS LENGTH, (FT)	NO. OF EXT. SECTIONS	NO. OF PANELS PER SECTION	VARIABLE END DIMEN.	PANEL LENGTH	SECTION LENGTH	NO. OF INT. SECTIONS	NO. OF PANELS PER SECTION	PANEL LENGTH	SECTION LENGTH
34	1	6	6"	5'-6"	35'-6"	0			
35	1	6	6"	5'-8"	36'-6"	0			
36	2	3	6"	5'-6"	18'-9"	0			
37	2	3	6"	5'-8"	19'-3"	0			
38	2	3	6"	5'-10"	19'-9"	0			
39	2	3	6"	6'-0"	20'-3"	0			
40	2	3	6"	6'-2"	20'-9"	0			
41	2	3	6"	6'-4"	21'-3"	0			
42	2	3	6"	6'-6"	21'-9"	0			
43	2	4	6"	5'-0"	22'-3"	0			
44	2	4	6"	5'-1 1/2"	22'-9"	0			
45	2	4	6"	5'-3"	23'-3"	0			
46	2	4	6"	5'-4 1/2"	23'-9"	0			
47	2	4	6"	5'-6"	24'-3"	0			
48	2	4	6"	5'-7 1/2"	24'-9"	0			
49	2	4	6"	5'-9"	25'-3"	0			
50	2	4	6"	5'-10 1/2"	25'-9"	0			
51	2	4	6"	6'-0"	26'-3"	0			
52	2	4	6"	6'-1 1/2"	26'-9"	0			
53	2	4	6"	6'-3"	27'-3"	0			
54	2	4	6"	6'-4 1/2"	27'-9"	0			
55	2	4	6"	6'-6"	28'-3"	0			
56	2	5	5 1/4"	5'-3 3/4"	28'-9"	0			
57	2	5	6 1/4"	5'-4 3/4"	29'-3"	0			
58	2	5	6"	5'-6"	29'-9"	0			
59	2	5	5 3/4"	5'-7 1/4"	30'-3"	0			
60	2	5	5 1/2"	5'- 8 1/2"	30'-9"	0			
61	2	5	6 1/2"	5'-9 1/2"	31'-3"	0			
62	2	5	6 1/4"	5'-10 3/4"	31'-9"	0			
63	2	5	6"	6'-0"	32'-3"	0			
64	2	5	5 3/4"	6'-1 1/4"	32'-9"	0			
65	2	5	5 1/2"	6'-2 1/2"	33'-3"	0			
66	2	5	5 1/4"	6'-3 3/4"	33'-9"	0			
67	2	5	6 1/4"	6'-4 3/4"	34'-3"	0			
68	2	5	6"	6'-6"	34'-9"	0			
69	2	4	6"	5'-4"	23'-7"	1	4	5'-4"	23'-4"
70	2	4	6"	5'-5"	23'-11"	1	4	5'-5"	23'-8"
71	2	4	6"	5'-6"	24'-3"	1	4	5'-6"	24'-0"
72	2	4	6"	5'-7"	24'-7"	1	4	5'-7"	24'-4"
73	2	4	6"	5'-8"	24'-11"	1	4	5'-8"	24'-8"
74	2	4	6"	5"-9"	25'-3"	1	4	5"-9"	25'-0"
75	2	4	6"	5'-10"	25'-7"	1	4	5'-10"	25'-4"
76	2	4	6"	5'-11"	25'-11"	1	4	5'-11"	25'-8"
77	2	4	6"	6'-0"	26'-3"	1	4	6'-0"	26'-0"
78	2	4	6"	6'-1"	26'-7"	1	4	6'-1"	26'-4"
79	2	4	6"	6'-2"	26'-11"	1	4	6'-2"	26'-8"
80	2	4	6"	6'-3"	27'-3"	1	4	6'-3"	27'-0"
81	2	4	6"	6'-4"	27'-7"	1	4	6'-4"	27'-4"

NOTES:

1. All panels on a truss shall be the same length. The minimum panel length is 5 ft - 0 in. and the maximum is 6 ft - 6 in.
2. Camber diagrams are for fabrication only and are measured with trusses fully supported at no-load conditions. Allowable camber tolerance for truss is 25% of specific camber value.
3. Single interior section in a truss shall have an even number of panels to maintain the pattern of the vertical diagonals.
4. The minimum number of sections for each box truss structure shall be used, while maintaining the maximum section length at 36 ft - 6 in.

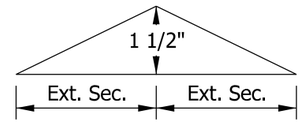

CAMBER DIAGRAM (2-Section Truss)

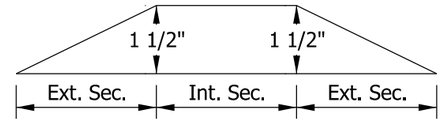

CAMBER DIAGRAM (3-Section Truss)

INDIANA DEPARTMENT OF TRANSPORTATION

SIGN BOX TRUSS STRUCTURE
TABLE OF DIMENSIONS
SPANS 34' THRU 81'
SEPTEMBER 2022

STANDARD DRAWING NO. E 802-SBTS-05

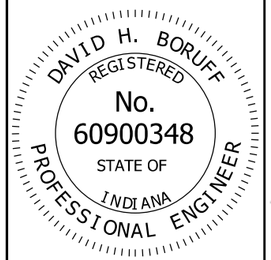

5/17/22
DESIGN STANDARDS ENGINEER DATE

07/07/2022
CHIEF ENGINEER DATE

DIMENSIONS FOR SIGN BOX TRUSSES (82' THRU 130')

SPAN	EXTERIOR SECTIONS					INTERIOR SECTIONS			
SPAN-TRUSS LENGTH, (FT)	NO. OF EXT. SECTIONS	NO. OF PANELS PER SECTION	VARIABLE END DIMEN.	PANEL LENGTH	SECTION LENGTH	NO. OF INT. SECTIONS	NO. OF PANELS PER SECTION	PANEL LENGTH	SECTION LENGTH
82	2	4	6"	6'-5"	27'-11"	1	4	6'-5"	27'-8"
83	2	4	6"	6'-6"	28'-3"	1	4	6'-6"	28'-0"
84	2	5	5 3/4"	5'-7 3/4"	30'-5 1/2"	1	4	5'-7 3/4"	24'-7"
85	2	5	6 1/2"	5'-8 1/2"	30'-10"	1	4	5'-8 1/2"	24'-10"
86	2	5	5 1/2"	5'-9 1/2"	31'-2"	1	4	5'-9 1/2"	25'-2"
87	2	5	6 1/4"	5'-10 1/4"	31'-6 1/2"	1	4	5'-10 1/4"	25'-5"
88	2	5	7"	5'-11"	31'-11"	1	4	5'-11"	25'-8"
89	2	5	6"	6'-0"	32'-3"	1	4	6'-0"	26'-0"
90	2	5	6 3/4"	6'-0 3/4"	32'-7 1/2"	1	4	6'-0 3/4"	26'-3"
91	2	5	5 3/4"	6'-1 3/4"	32'-11 1/2"	1	4	6'-1 3/4"	26'-7"
92	2	5	6 1/2"	6'-2 1/2"	33'-4"	1	4	6'-2 1/2"	26'-10"
93	2	5	5 1/2"	6'-3 1/2"	33'-8"	1	4	6'-3 1/2"	27'-2"
94	2	5	6 1/4"	6'-4 1/4"	34'-0 1/2"	1	4	6'-4 1/4"	27'-5"
95	2	5	5 1/4"	6'-5 1/4"	34'-4 1/2"	1	4	6'-5 1/4"	27'-9"
96	2	5	6"	6'-6"	34'-9"	1	4	6'-6"	28'-0"
97	2	4	6"	5'-7 1/2"	24'-9"	2	4	5'-7 1/2"	24'-6"
98	2	4	6"	5'-8 1/4"	25'-0"	2	4	5'-8 1/4"	24'-9"
99	2	4	6"	5'-9"	25'-3"	2	4	5'-9"	25'-0"
100	2	4	6"	5'-9 3/4"	25'-6"	2	4	5'-9 3/4"	25'-3"
101	2	4	6"	5'-10 1/2"	25'-9"	2	4	5'-10 1/2"	25'-6"
102	2	4	6"	5'-11 1/4"	26'-0"	2	4	5'-11 1/4"	25'-9"
103	2	4	6"	6'-0"	26'-3"	2	4	6'-0"	26'-0"
104	2	4	6"	6'-0 3/4"	26'-6"	2	4	6'-0 3/4"	26'-3"
105	2	4	6"	6'-1 1/2"	26'-9"	2	4	6'-1 1/2"	26'-6"
106	2	4	6"	6'-2 1/4"	27'-0"	2	4	6'-2 1/4"	26'-9"
107	2	4	6"	6'-3"	27'-3"	2	4	6'-3"	27'-0"
108	2	4	6"	6'-3 3/4"	27'-6"	2	4	6'-3 3/4"	27'-3"
109	2	4	6"	6'-4 1/2"	27'-9"	2	4	6'-4 1/2"	27'-6"
110	2	4	6"	6'-5 1/4"	28'-0"	2	4	6'-5 1/4"	27'-9"
111	2	4	6"	6'-6"	28'-3"	2	4	6'-6"	28'-0"
112	2	5	6"	5'-3"	28'-6"	2	5	5'-3"	28'-3"
113	2	5	7"	5'-3 1/2"	28'-9 1/2"	2	5	5'-3 1/2"	28'-5 1/2"
114	2	5	5 1/2"	5'-4 1/4"	28'-11 3/4"	2	5	5'-4 1/4"	28'-9 1/4"
115	2	5	6 1/2"	5'-4 3/4"	29'-3 1/4"	2	5	5'-4 3/4"	28'-11 3/4"
116	2	5	7 1/2"	5'-5 1/4"	29'-6 3/4"	2	5	5'-5 1/4"	29'-2 1/4"
117	2	5	6"	5'-6"	29'-9"	2	5	5'-6"	29'-6"
118	2	5	7"	5'-6 1/2"	30'-0 1/2"	2	5	5'-6 1/2"	29'-8 1/2"
119	2	5	5 1/2"	5'-7 1/4"	30'-2 3/4"	2	5	5'-7 1/4"	30'-1/4"
120	2	5	6 1/2"	5'-7 3/4"	30'-6 1/4"	2	5	5'-7 3/4"	30'-2 3/4"
121	2	5	7 1/2"	5'-8 1/4"	30'-9 3/4"	2	5	5'-8 1/4"	30'-5 1/4"
122	2	5	6"	5'-9"	31'-0"	2	5	5'-9"	30'-9"
123	2	5	7"	5'-9 1/2"	31'-3 1/2"	2	5	5'-9 1/2"	30'-11 1/2"
124	2	5	5 1/2"	5'-10 1/4"	31'-5 3/4"	2	5	5'-10 1/4"	31'-3 1/4"
125	2	5	6 1/2"	5'-10 3/4"	31'-9 1/4"	2	5	5'-10 3/4"	31'-5 3/4"
126	2	5	7 1/2"	5'-11 1/4"	32' -0 3/4"	2	5	5'-11 1/4"	31'-8 1/4"
127	2	5	6"	6'-0"	32'-3"	2	5	6'-0"	32'-0"
128	2	5	7"	6'-0 1/2"	32'-6 1/2"	2	5	6'-0 1/2"	32'-2 1/2"
129	2	5	5 1/2"	6'-1 1/4"	32'-8 3/4"	2	5	6'-1 1/4"	32'-6 1/4"
130	2	5	6 1/2"	6'-1 3/4"	33'-0 1/4"	2	5	6'-1 3/4"	32'-8 3/4"

NOTES:

1. All panels on a truss shall be the same length. The minimum panel length is 5 ft - 0 in. and the maximum is 6 ft - 6 in.
2. Camber diagrams are for fabrication only and are measured with trusses fully supported at no-load conditions. Allowable camber tolerance for truss is 25% of specific camber value.
3. Single interior section in a truss shall have an even number of panels to maintain the pattern of the vertical diagonals.
4. The minimum number of sections for each box truss structure shall be used, while maintaining the maximum section length at 36 ft - 6 in.

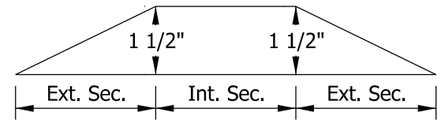

CAMBER DIAGRAM (3-Section Truss)

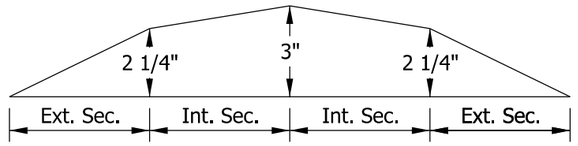

CAMBER DIAGRAM (4-Section Truss)

INDIANA DEPARTMENT OF TRANSPORTATION

SIGN BOX TRUSS STRUCTURE
TABLE OF DIMENSIONS
SPANS 82' THRU 130' AND CAMBER
SEPTEMBER 2022

STANDARD DRAWING NO. E 802-SBTS-06

DAVID H. BORUFF REGISTERED No. 60900348 STATE OF INDIANA PROFESSIONAL ENGINEER

David H Boruff 5/17/22
DESIGN STANDARDS ENGINEER DATE

07/07/2022
CHIEF ENGINEER DATE

DIMENSIONS FOR SIGN BOX TRUSSES (131' THRU 154')

SPAN	EXTERIOR SECTIONS					INTERIOR SECTIONS			
SPAN-TRUSS LENGTH, (FT)	NO. OF EXT. SECTIONS	NO. OF PANELS PER SECTION	VARIABLE END DIMEN.	PANEL LENGTH	SECTION LENGTH	NO. OF INT. SECTIONS	NO. OF PANELS PER SECTION	PANEL LENGTH	SECTION LENGTH
131	2	5	6 1/4"	6'-2 3/8"	33'-3 1/8"	2	5	6'-2 3/8"	32'-11 7/8"
132	2	5	6"	6'-3"	33'-6"	2	5	6'-3"	33'-3"
133	2	5	7"	6'-3 1/2"	33'-9 1/2"	2	5	6'-3 1/2"	33'-5 1/2"
134	2	5	6 3/4"	6'-4 1/8"	34'-0 3/8"	2	5	6'-4 1/8"	33'-8 5/8"
135	2	5	6 1/2"	6'-4 3/4"	34'-3 1/4"	2	5	6'-4 3/4"	33'-11 3/4"
136	2	5	6 1/4"	6'-5 3/8"	34'-6 1/8"	2	5	6'-5 3/8"	34'-2 7/8"
137	2	5	6"	6'-6"	34'-9"	2	5	6'-6"	34'-6"
138	2	6	6 7/8"	5'-11 3/8"	38'-0 1/8"	2	5	5'-11 3/8"	31'-8 7/8"
139	2	6	7 3/8"	5'-11 7/8"	38'-3 5/8"	2	5	5'-11 7/8"	31'-11 3/8"
140	2	6	6 1/2"	6'-0 1/2"	38'-6 1/2"	2	5	6'-0 1/2"	32'-2 1/2"
141	2	6	7"	6'-1"	38'-10"	2	5	6'-1"	32'-5"
142	2	6	6 1/8"	6'-1 5/8"	39'-0 7/8"	2	5	6'-1 5/8"	32'-8 1/8"
143	2	6	6 5/8"	6'-2 1/8"	39'-4 3/8"	2	5	6'-2 1/8"	32'-10 5/8"
144	2	6	7 1/8"	6'-2 5/8"	39'-7 7/8"	2	5	6'-2 5/8"	33'-1 1/8"
145	2	6	6 1/4"	6'-3 1/4"	39'-10 3/4"	2	5	6'-3 1/4"	33'-4 1/4"
146	2	6	6 3/4"	6'-3 3/4"	40'-2 1/4"	2	5	6'-3 3/4"	33'-6 3/4"
147	2	6	5 7/8"	6'-4 3/8"	40'-5 1/8"	2	5	6'-4 3/8"	33'-9 7/8"
148	2	6	6 3/8"	6'-4 7/8"	40'-8 5/8"	2	5	6'-4 7/8"	34'-0 3/8"
149	2	6	6 7/8"	6'-5 3/8"	41'-0 1/8"	2	5	6'-5 3/8"	34'-2 7/8"
150	2	6	7 1/2"	5'-11 3/8"	38'-0 3/4"	2	6	5'-11 3/8"	37'-8 1/4"
151	2	6	7 1/2"	5'-11 7/8"	38'-3 3/4"	2	6	5'-11 7/8"	37'-11 1/4"
152	2	6	6"	6'-0 1/2"	38'-6"	2	6	6'-0 1/2"	38'-3"
153	2	6	6"	6'-1"	38'-9"	2	6	6'-1"	38'-6"
154	2	6	6"	6'-1 1/2"	39'-0"	2	6	6'-1 1/2"	38'-9"

NOTES:

1. All panels on a truss shall be the same length. The minimum panel length is 5 ft - 11 3/8 in. and the maximum is 6 ft - 6 in.

2. Camber diagram is for fabrication only and is measured with trusses fully supported at no-load conditions. Allowable camber tolerance for truss is 25% of specific camber value.

3 The minimum number of sections for each box truss structure shall be used, while maintaining the maximum section length at 36 ft - 6 in.

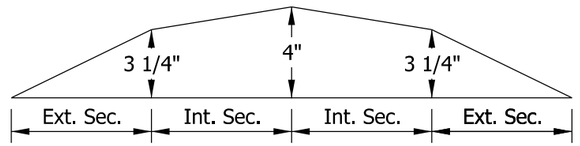

CAMBER DIAGRAM (4-Section Truss)

INDIANA DEPARTMENT OF TRANSPORTATION

SIGN BOX TRUSS STRUCTURE
TABLE OF DIMENSIONS
SPANS 131' THRU 154' AND CAMBER
SEPTEMBER 2022

STANDARD DRAWING NO. E 802-SBTS-07

DAVID H. BORUFF REGISTERED No. 60900348 STATE OF INDIANA PROFESSIONAL ENGINEER

5/17/22
DESIGN STANDARDS ENGINEER DATE

07/07/2022
CHIEF ENGINEER DATE

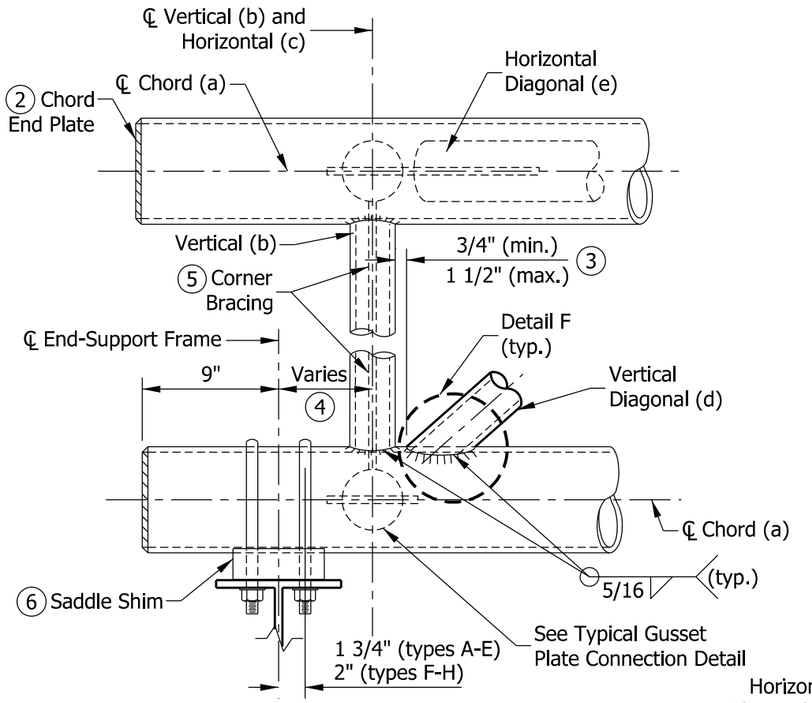

DETAIL A
EXTERIOR SECTION AT END SUPPORT

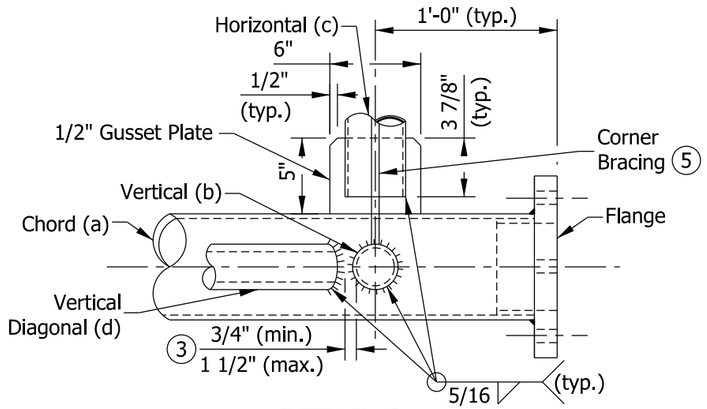

DETAIL C
CHORD AT FLANGE CONNECTION
PLAN VIEW

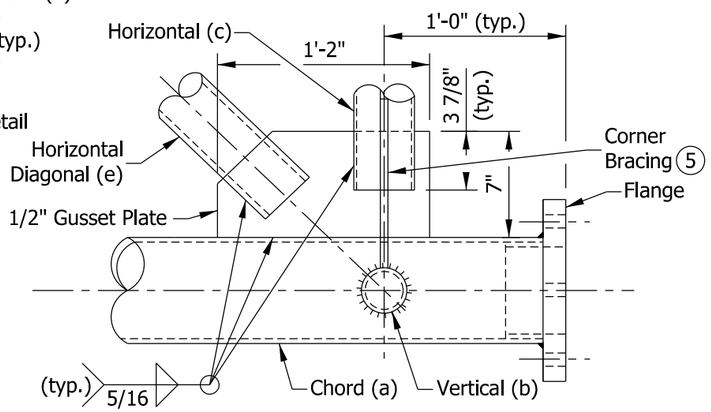

DETAIL D
CHORD AT FLANGE CONNECTION
PLAN VIEW

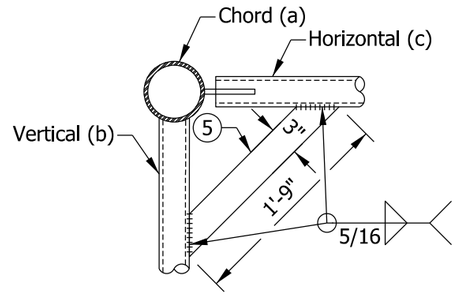

DETAIL E
TYPICAL CORNER BRACING

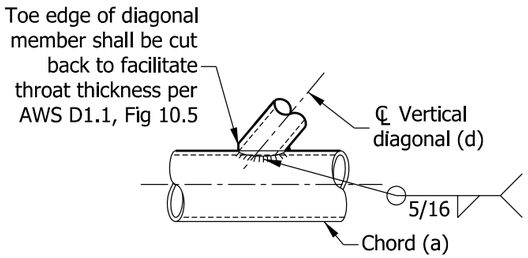

DETAIL F

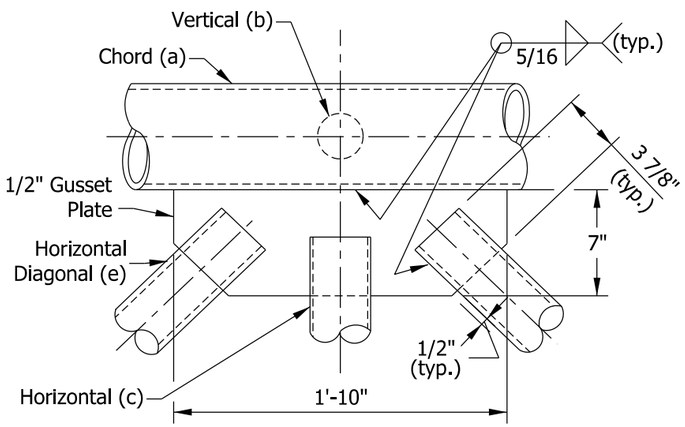

DETAIL B
TYPICAL PANEL CONNECTION
PLAN VIEW

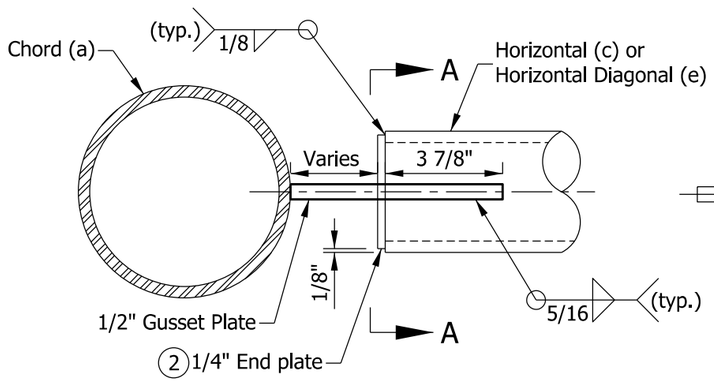

TYPICAL GUSSET PLATE CONNECTION DETAIL
ELEVATION VIEW

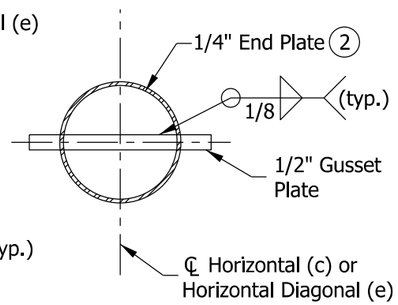

SECTION A-A

NOTES:

1. All bracing members shall be machined to provide a snug fit to the chord along the entire edge of bracing member before welding. See Standard Drawing E 802-SBTS-02, 03 and 04 for member locations.
2. End plate at horizontal (c) and horizontal diagonal (e) may be welded as one piece and slotted or welded as two pieces after slotting the member. See Standard Drawing E 802-SBTS-09 for chord end plate details.
3. Vertical and horizontal diagonals shall be fabricated for minimum offset from the panel point offset to provide a ¾ in. minimum to 1½ in. maximum clearance between any diagonal and any horizontal or vertical member.
4. For variable end dimension, see Standard Drawings E 802-SBTS-05, 06 and 07.
5. See Standard Drawings E 802-SBTS-03 and 04 for corner brace locations. Each brace member shall be 3 in. x 1 ft - 9 in. x ½ in. and placed at 45° to vertical.
6. See Standard Drawings E 802-SBTS-11 or 12 for saddle shim detail.

INDIANA DEPARTMENT OF TRANSPORTATION

SIGN BOX TRUSS STRUCTURE
CHORD CONNECTIONS
AND WELD DETAILS
SEPTEMBER 2022

STANDARD DRAWING NO. E 802-SBTS-08

DAVID H. BORUFF
REGISTERED
No. 60900348
STATE OF INDIANA
PROFESSIONAL ENGINEER

David H Boruff 5/17/22
DESIGN STANDARDS ENGINEER DATE

07/07/2022
CHIEF ENGINEER DATE

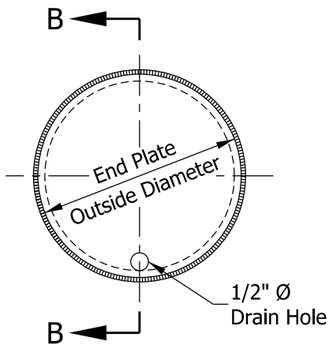

END VIEW

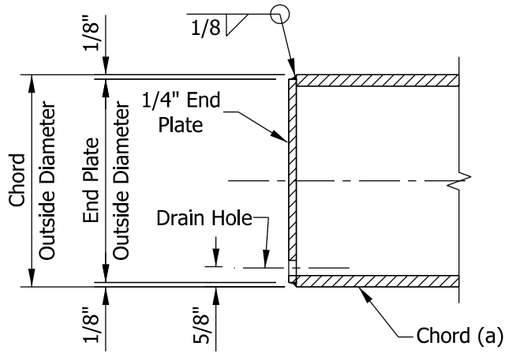

SECTION B-B

CHORD END PLATE DETAIL

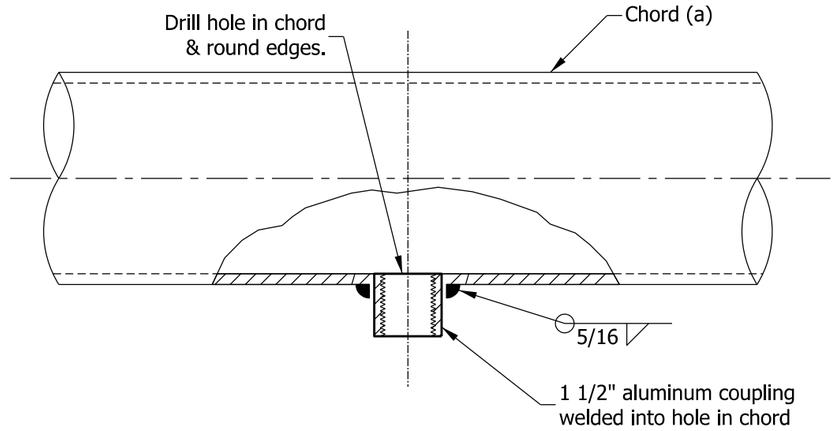

WIRE OUTLET DETAIL

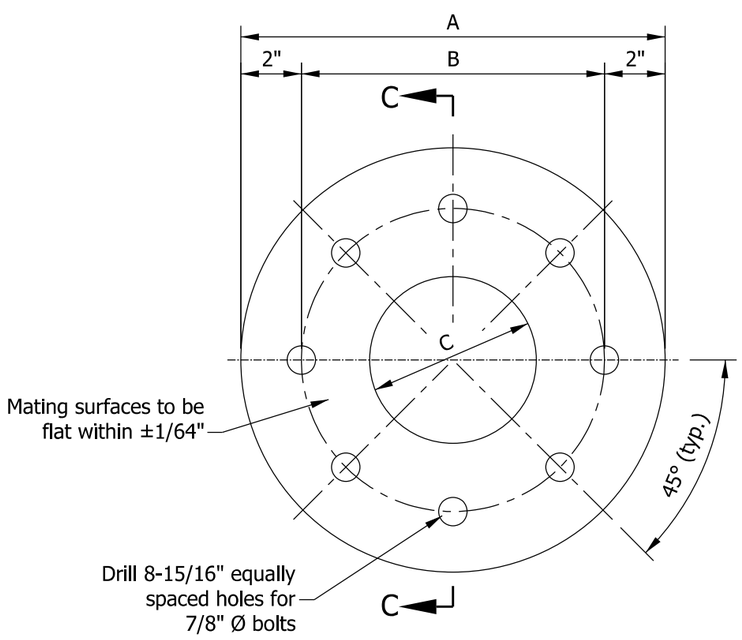

END VIEW

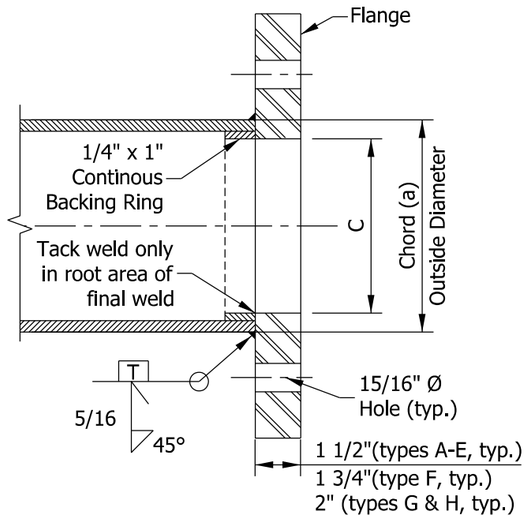

SECTION C-C

FLANGE DETAIL

TABLE OF FLANGE DIMENSIONS					
TRUSS TYPE	TRUSS CHORD O.D. x THK.	BOLT SIZE	DIMENSION		
			A	B	C
A & B	6 1/2" x 3/8"	7/8"	14"	10"	5 1/4"
C & D	7" x 3/8"	7/8"	14"	10"	5 3/4"
E	7" x 1/2"	7/8"	14"	10"	5 1/2"
F	7 1/2" x 1/2"	7/8"	14 1/2"	10 1/2"	6"
G	9" x 1/2"	7/8"	16"	12"	7 1/2"
H	10" x 1/2"	7/8"	17"	13"	8 1/2"

INDIANA DEPARTMENT OF TRANSPORTATION

SIGN BOX TRUSS STRUCTURE
FLANGE, CHORD END PLATE, AND WIRE OUTLET DETAILS
SEPTEMBER 2022

STANDARD DRAWING NO. E 802-SBTS-09

DAVID H. BORUFF REGISTERED No. 60900348 STATE OF INDIANA PROFESSIONAL ENGINEER

David H Boruff 5/17/22
DESIGN STANDARDS ENGINEER DATE

07/07/2022
CHIEF ENGINEER DATE

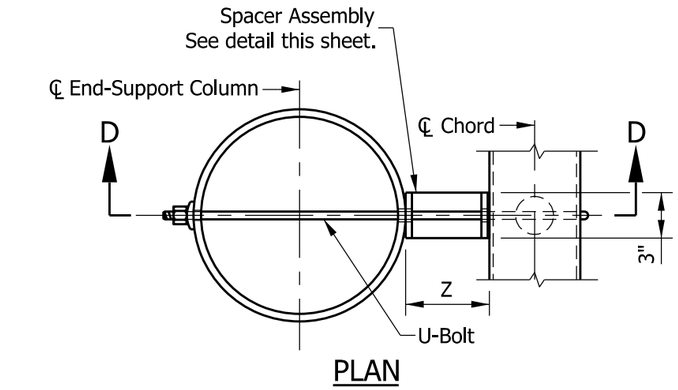

PLAN

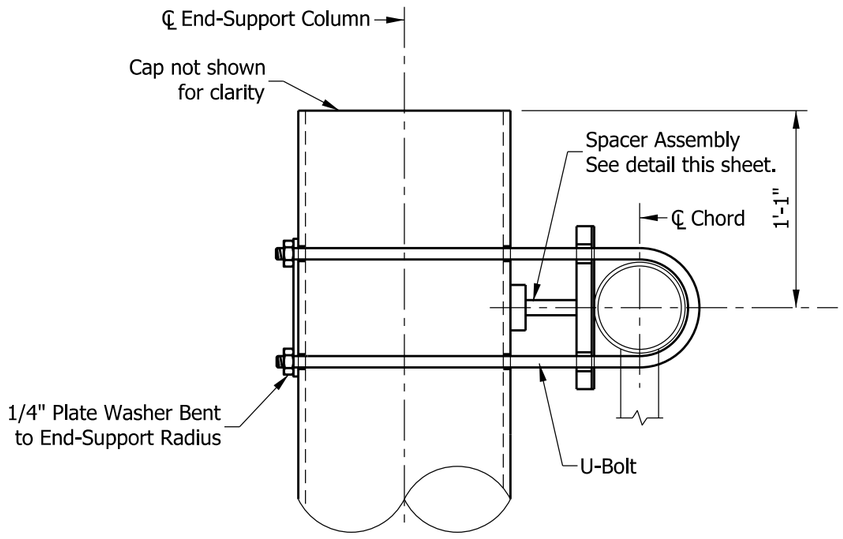

SECTION D-D
UPPER CHORD CONNECTION DETAILS

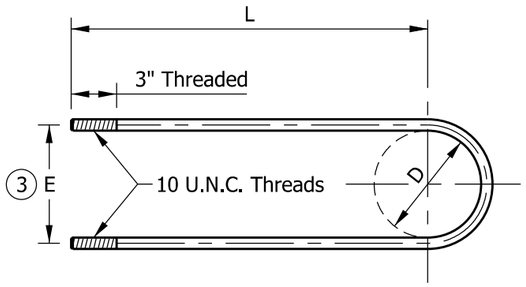

STAINLESS STEEL U-BOLT DETAIL
3/4" (dia.) for Truss Types A-E
1" (dia.) for Truss Types F-H

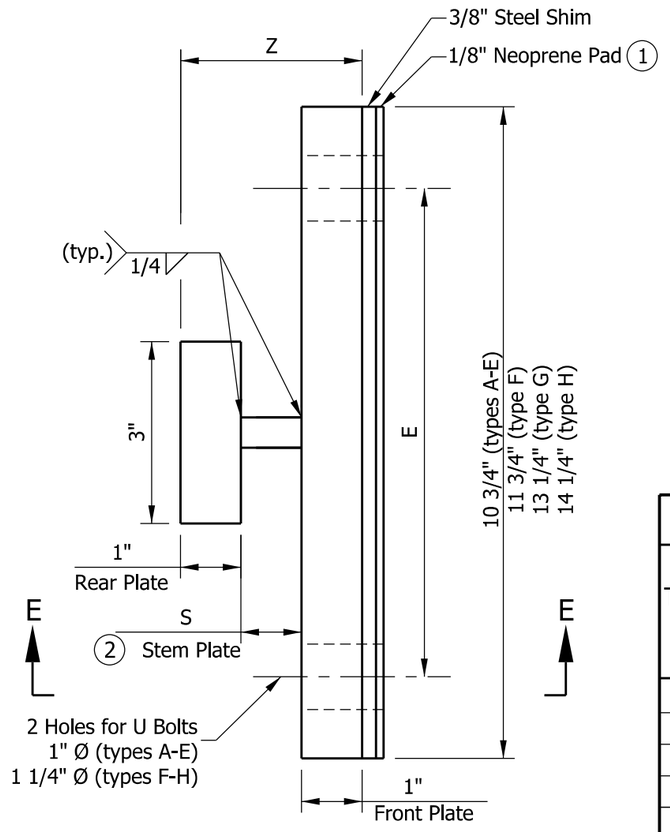

ELEVATION
END SUPPORT SPACER ASSEMBLY DETAIL

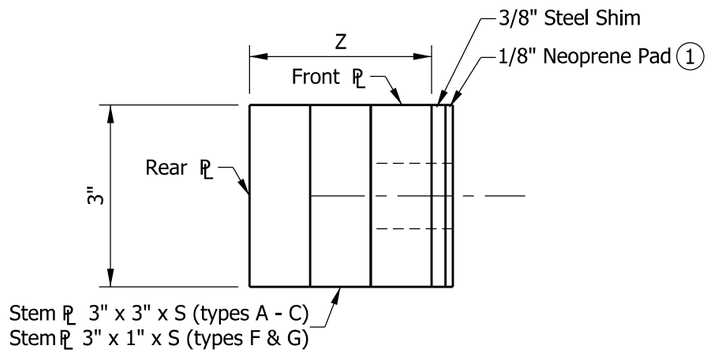

SECTION E-E

NOTES:

1. Provide isolation from steel-dissimilar metal.
2. For truss types D, E, and H Stem plate is not required. Fillet weld front and rear plates together.
3. Dimension E is equal to the diameter of chord (a) plus 1 ¼ in.

SPACER ASSEMBLY DIMENSIONS

TRUSS TYPE	END-SUPPORT COLUMN SIZE (h)	CHORD (a)	Ø OF U-BOLT BEND	E	Z	L	S
	O.D. IN.	O.D. IN.	(D) IN.	IN.	IN.	IN.	IN.
A	14	6 1/2	6 9/16	7 1/2	4 1/4	24	2 1/4"
B	14	6 1/2	6 9/16	7 1/2	4 1/4	24	2 1/4"
C	14	7	7 1/16	8	4	24	2"
D	18	7	7 1/16	8	2	26	-
E	18	7	7 1/16	8	2	26	-
F	18	7 1/2	7 9/16	8 3/4	3 1/4	27 1/2	1 1/4
G	18	9	9 1/16	10 1/4	2 1/2	27 1/2	1/2
H	18	10	10 1/16	11 1/4	2	27 1/2	-

INDIANA DEPARTMENT OF TRANSPORTATION

SIGN BOX TRUSS STRUCTURE
END-SUPPORT UPPER CHORD
CONNECTION DETAILS
SEPTEMBER 2022

STANDARD DRAWING NO. E 802-SBTS-10

DAVID H. BORUFF
REGISTERED
No. 60900348
STATE OF INDIANA
PROFESSIONAL ENGINEER

David H Boruff 5/17/22
DESIGN STANDARDS ENGINEER DATE

07/07/2022
CHIEF ENGINEER DATE

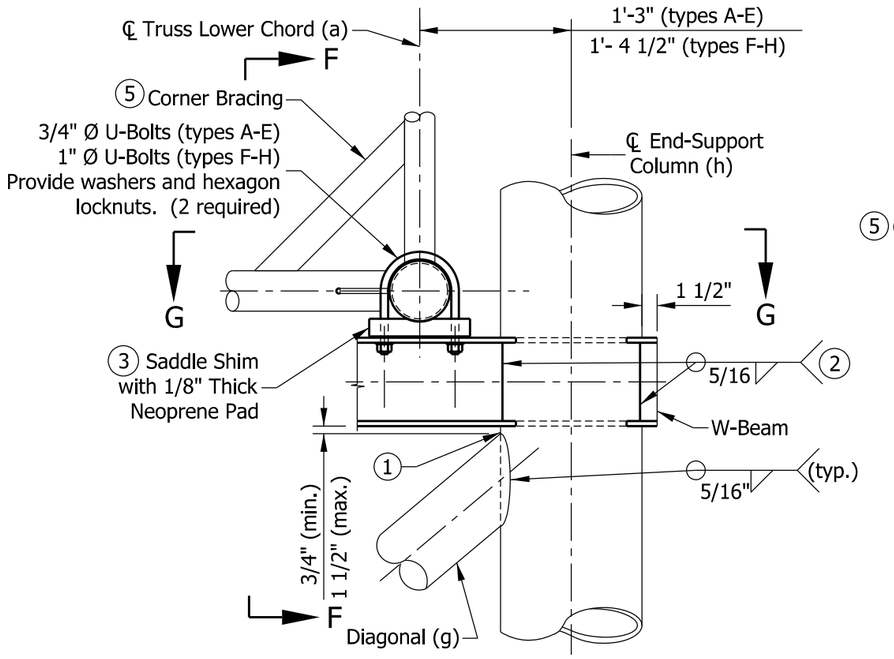

LOWER CHORD CONNECTION DETAIL

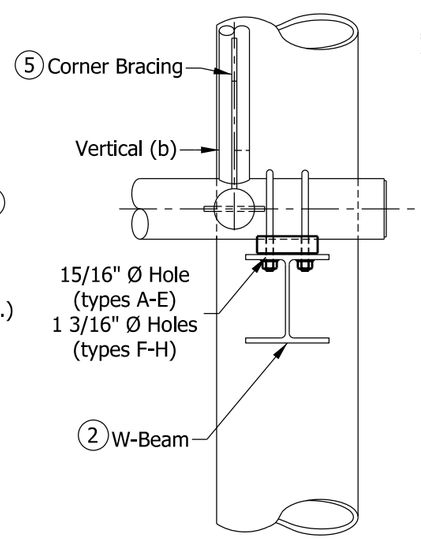

SECTION F-F

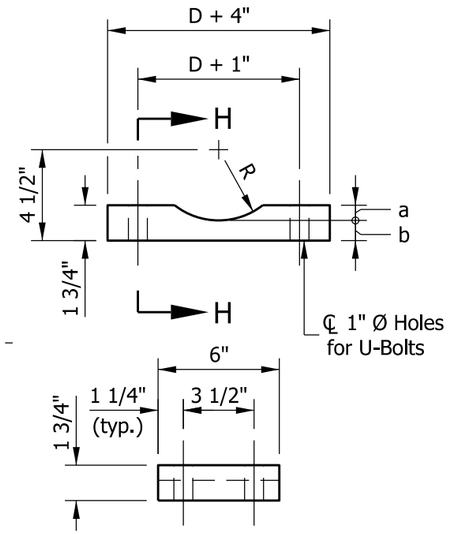

SECTION H-H (TYPES A-E)
SADDLE SHIM DETAIL

NOTES:

1. Toe edge of diagonal member shall be cut back to facilitate throat thickness. See Standard Drawing E 802-SBTS-08 Detail F for toe edge detail.
2. Holes shall be cut in end support columns for W-beams to pass through. Holes shall have a ⅛ in. maximum clearance to W-beam. Holes in opposite sides of column shall be checked for proper alignment prior to cutting.
3. Neoprene pads shall be provided at all chord-to-W-beam bearing surfaces.
4. See Standard Drawings E 802-SBTS-03 and 04 for end support member sizes.
5. A corner brace shall be required on each of the eight external corners of exterior and interior sections. Each brace shall be 1 ft - 9 in. x 3 in. x ½ in. See Standard Drawing E 802-SBTS-08 for corner bracing Detail E.
6. For truss type H, Horizontal (f) will overlap Diagonals (g). Trim Horizontal (f) shall be trimmed for welding to Diagonals (g)
7. See Standard Drawing E 802-SBTS-12 for HSS square-beam as an alternate to truss supporting W-beam (g).

TRUSS TYPE	D	a	b
A & B	6 1/2"	17/32"	1 7/32"
C - E	7"	25/32"	31/32"
F	7 1/2"	25/32"	31/32"
G	9"	25/32"	31/32"
H	10"	25/32"	31/32"

R = D/2 + 1/32"
D = Outside Diameter of Chord(a).
R + b = 4 1/2" (types A-E)
R + b = Offset (types F-H)

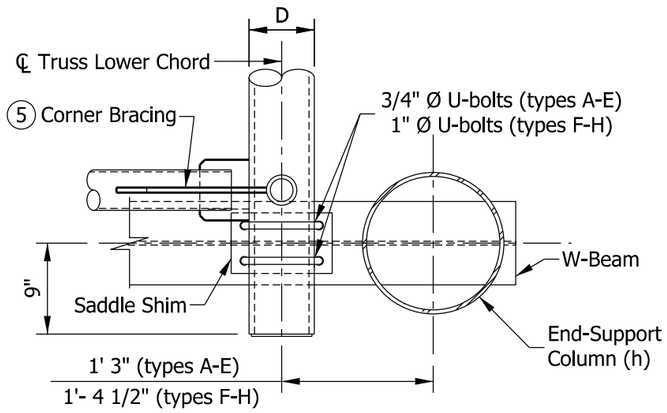

SECTION G-G

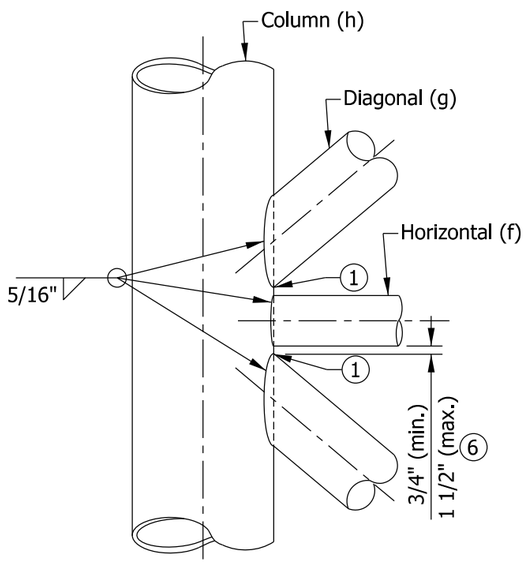

ELEVATION (END-SUPPORT)
TYPICAL BRACING MEMBERS CONNECTION

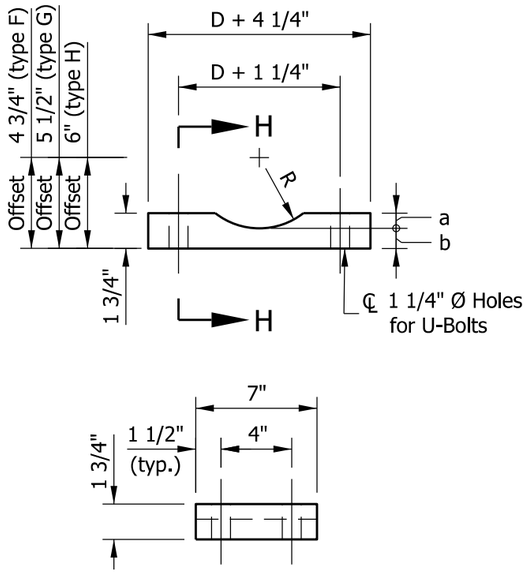

SECTION H-H (TYPES F-H)
SADDLE SHIM DETAIL

INDIANA DEPARTMENT OF TRANSPORTATION

SIGN BOX TRUSS STRUCTURE
END-SUPPORT LOWER CHORD
CONNECTION DETAILS
SEPTEMBER 2022

STANDARD DRAWING NO. E 802-SBTS-11

DAVID H. BORUFF
REGISTERED
No. 60900348
STATE OF INDIANA
PROFESSIONAL ENGINEER

David H Boruff 5/17/22
DESIGN STANDARDS ENGINEER DATE

07/07/2022
CHIEF ENGINEER DATE

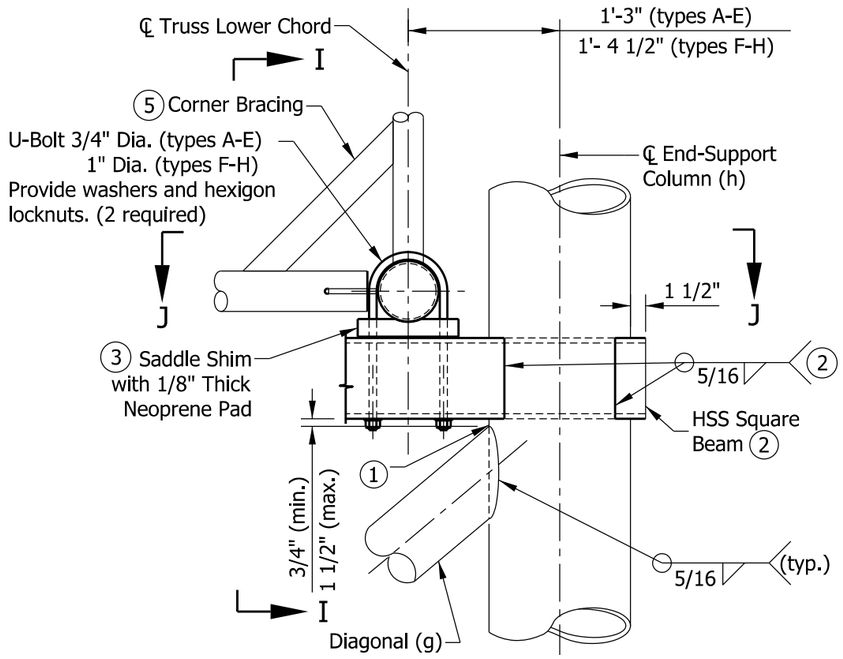

LOWER CHORD CONNECTION DETAIL

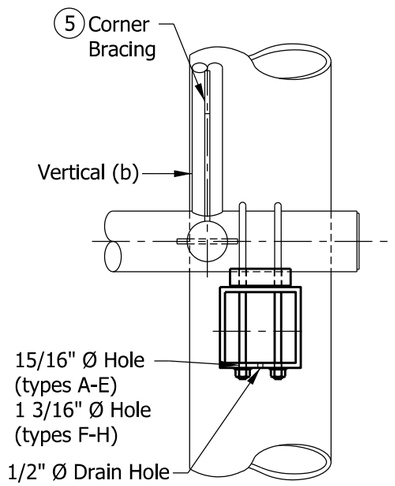

SECTION I-I

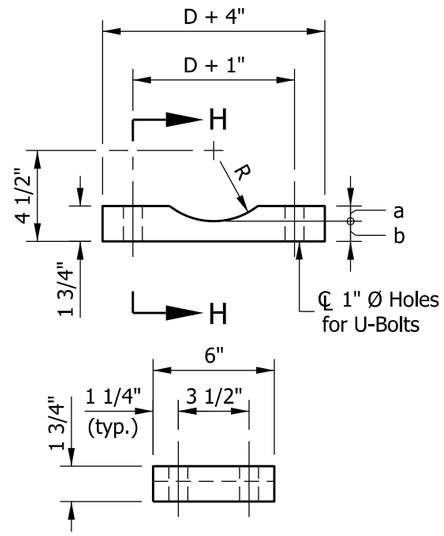

SECTION H-H (TYPES A-E)
SADDLE SHIM DETAIL

NOTES:

1. Toe edge of diagonal member shall be cut back to facilitate throat thickness. See Standard Drawing E 802-SBTS-08 Detail F for toe edge detail.
2. Holes shall be cut in end support columns for square beams to pass through. Holes shall have a ⅛ in. maximum clearance to square beam. Holes in opposite sides of column shall be checked for proper alignment prior to cutting.
3. Neoprene pads shall be at all chord-to-square-beam bearing surfaces.
4. See Standard Drawings E 802-SBTS-03 and 04 for end support member sizes.
5. A corner brace is required on each of the eight external corners of exterior and interior sections. Each brace shall be 1 ft - 9 in. x 3 in. x ½ in. See Standard Drawing E 802-SBTS-08 for corner bracing Detail E.
6. For Truss type H, Horizontal (f) will overlap Diagonals (g). Trim Horizontal (f) shall be trimmed for welding to Diagonals (g).

TRUSS TYPE	D	a	b
A & B	6 1/2"	17/32"	1 7/32"
C - E	7"	25/32"	31/32"
F	7 1/2"	25/32"	31/32"
G	9"	25/32"	31/32"
H	10"	25/32"	31/32"

R = D/2 + 1/32"
D = Outside Diameter of Chord(a).
R + b = 4 1/2" (types A-E)
R + b = Offset (types F-H)

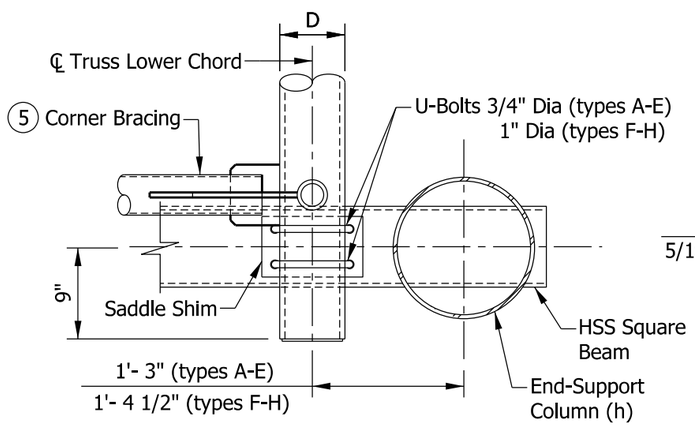

SECTION J-J

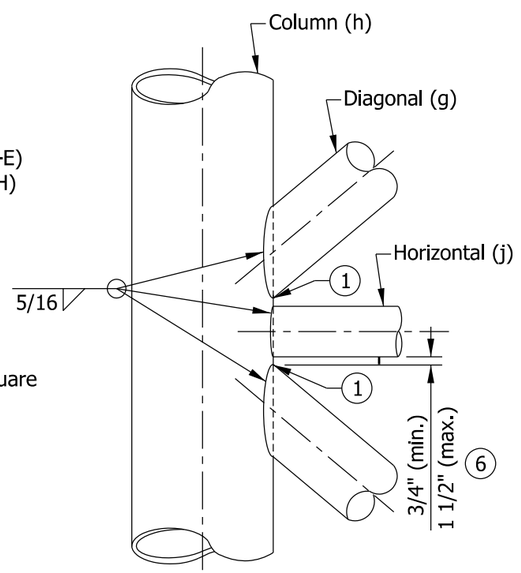

ELEVATION (END-SUPPORT)
TYPICAL BRACING MEMBERS CONNECTION

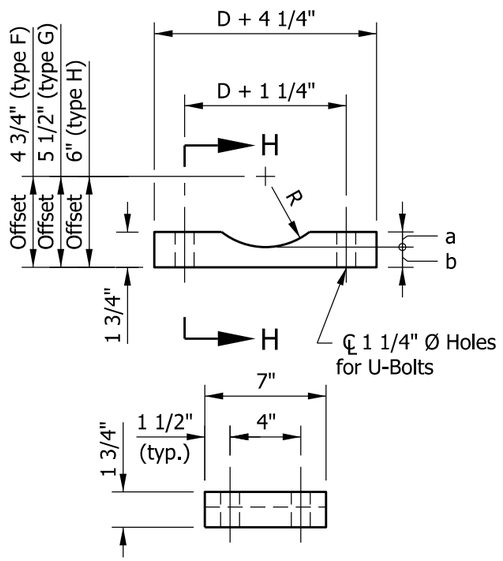

SECTION H-H (TYPES F-H)
SADDLE SHIM DETAIL

INDIANA DEPARTMENT OF TRANSPORTATION

SIGN BOX TRUSS STRUCTURE
END SUPPORT LOWER CHORD CONNECTION DETAILS, ALTERNATE HSS BEAM
SEPTEMBER 2022

STANDARD DRAWING NO. E 802-SBTS-12

DAVID H. BORUFF
REGISTERED
No. 60900348
STATE OF INDIANA
PROFESSIONAL ENGINEER

David H Boruff 5/17/22
DESIGN STANDARDS ENGINEER DATE

07/07/2022
CHIEF ENGINEER DATE

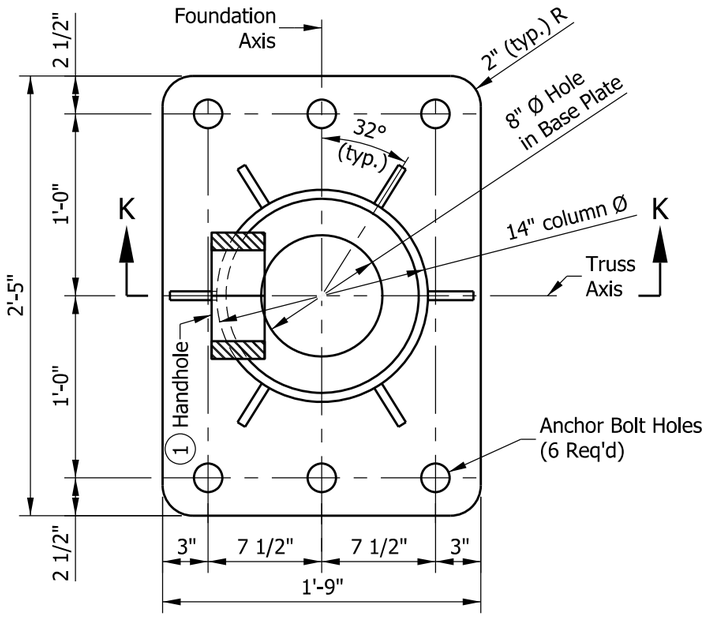

TYPE B-14 BASE PLATE DETAIL

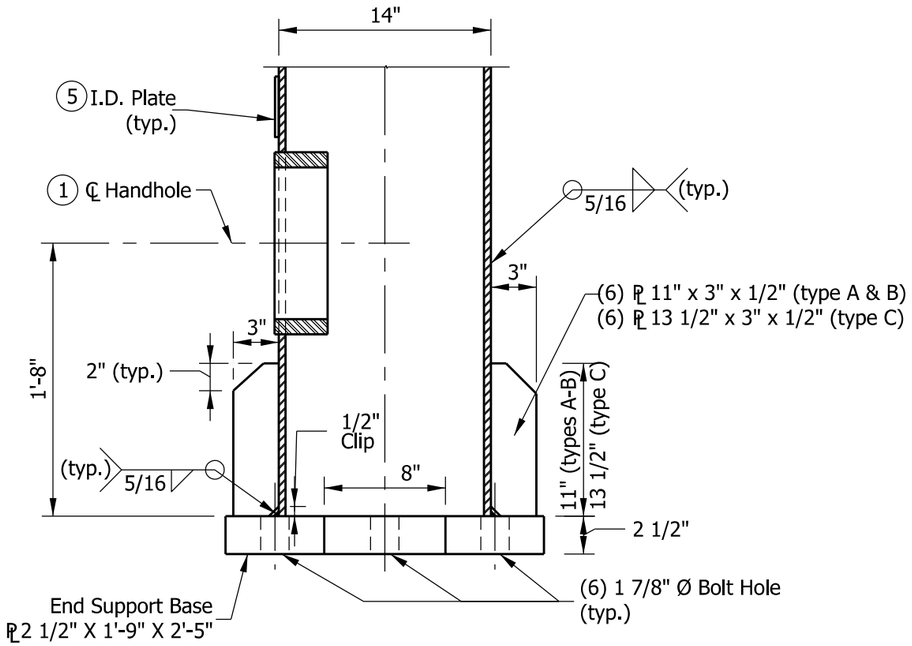

SECTION K-K

NOTES:

1. See Standard Drawing E 802-SBTS-15 for handhole details.
2. Type B-14 base plate shall be used for end-support column with a 14 in. diameter. Type B-18 base plate shall be used for end-support column with a 18 in. diameter.
3. See Standard Drawing E 802-SBTS-16 for anchor bolt and metal skirt details.
4. Each end support shall have one handhole at the column base (h). Handhole shall be placed on the column nearest to the sign.
5. See Standard Drawing E 802-SBTS-14 for I.D. Plate Details.
6. The centerline of the handhole shall be 2 ft - 0 in. from the top of the base plate.

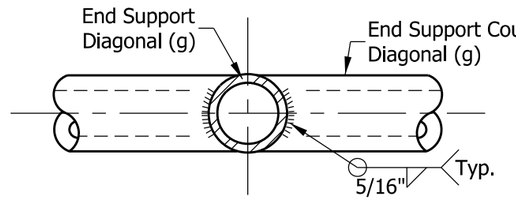

END SUPPORT DIAGONAL CROSSING DETAIL

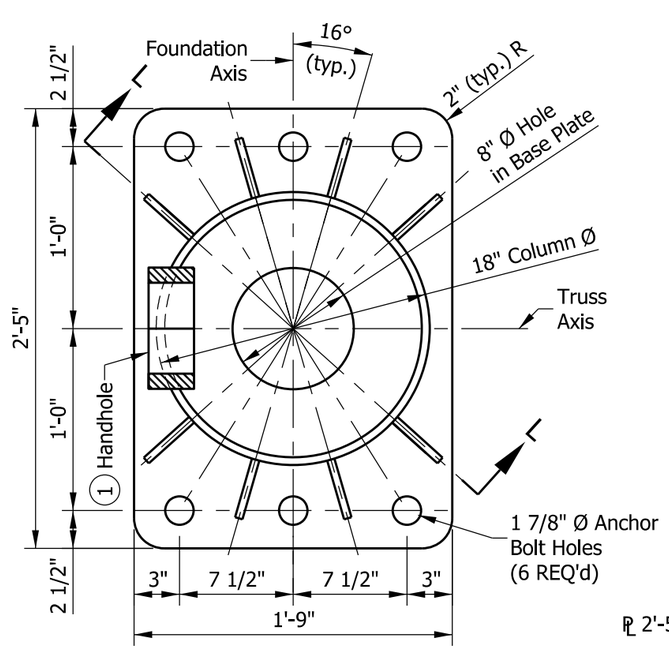

TYPE B-18 BASE PLATE DETAIL

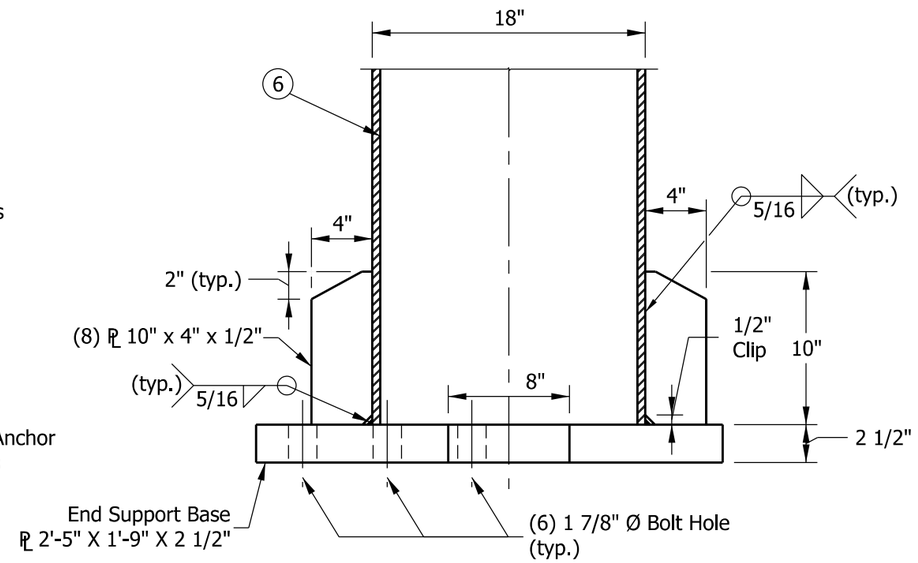

SECTION L-L

INDIANA DEPARTMENT OF TRANSPORTATION

SIGN BOX TRUSS STRUCTURE
END SUPPORT AND
BASE PLATE
SEPTEMBER 2022

STANDARD DRAWING NO. E 802-SBTS-13

DAVID H. BORUFF REGISTERED No. 60900348 STATE OF INDIANA PROFESSIONAL ENGINEER

David H Boruff 5/17/22
DESIGN STANDARDS ENGINEER DATE

07/07/2022
CHIEF ENGINEER DATE

NOTE:

1. I.D. plate shall be provided on each end-support column.
2. I.D. plate shall be ⅛ in. stainless steel plate with the information stamped in ¼ in. black letters.

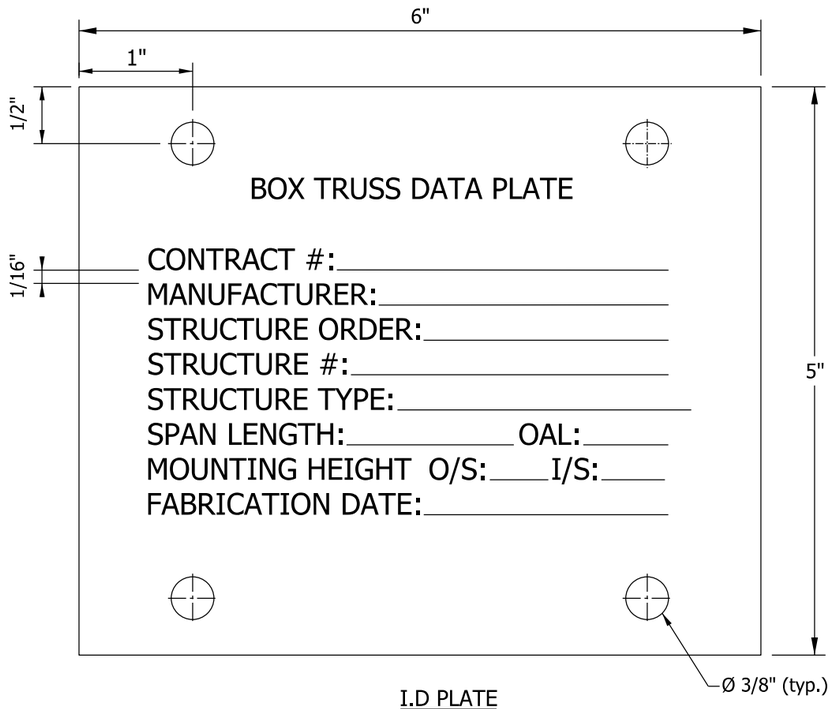

I.D PLATE

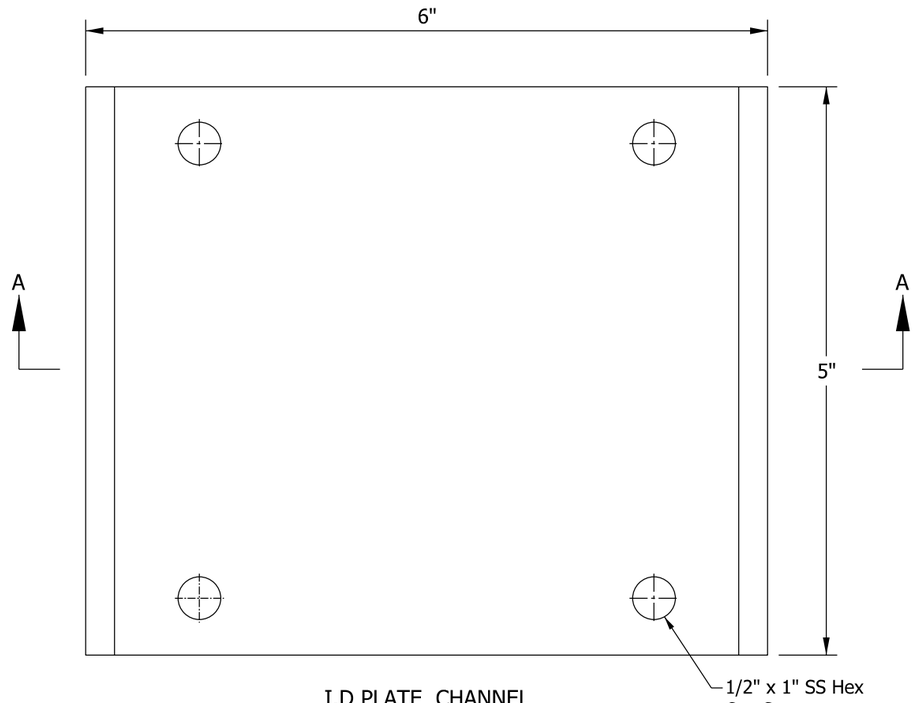

I.D PLATE CHANNEL

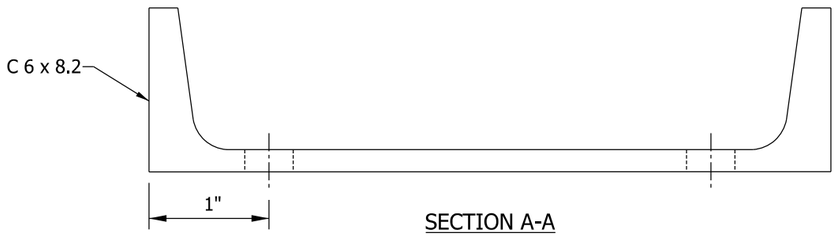

SECTION A-A

INDIANA DEPARTMENT OF TRANSPORTATION

SIGN BOX TRUSS STRUCTURE
I.D. PLATE DETAILS

SEPTEMBER 2022

STANDARD DRAWING NO. E 802-SBTS-14

DAVID H. BORUFF
REGISTERED
No. 60900348
STATE OF INDIANA
PROFESSIONAL ENGINEER

David H Boruff 5/17/22
DESIGN STANDARDS ENGINEER DATE

07/07/2022
CHIEF ENGINEER DATE

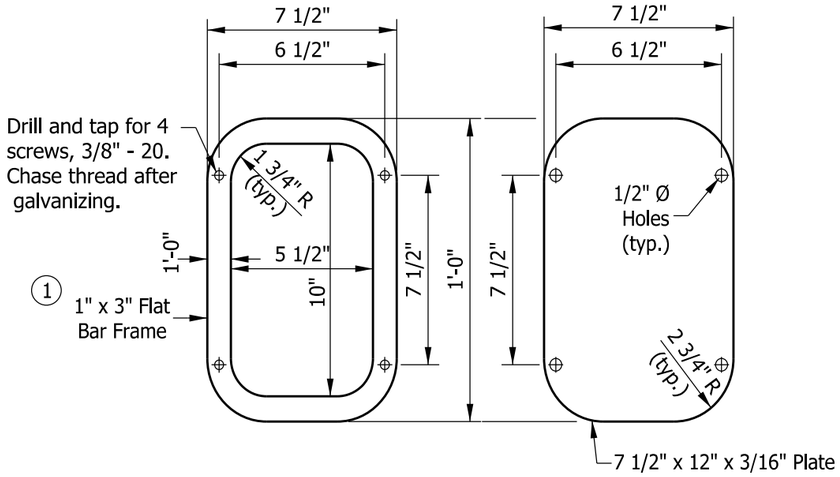

HANDHOLE FRAME DETAIL HANDHOLE COVER

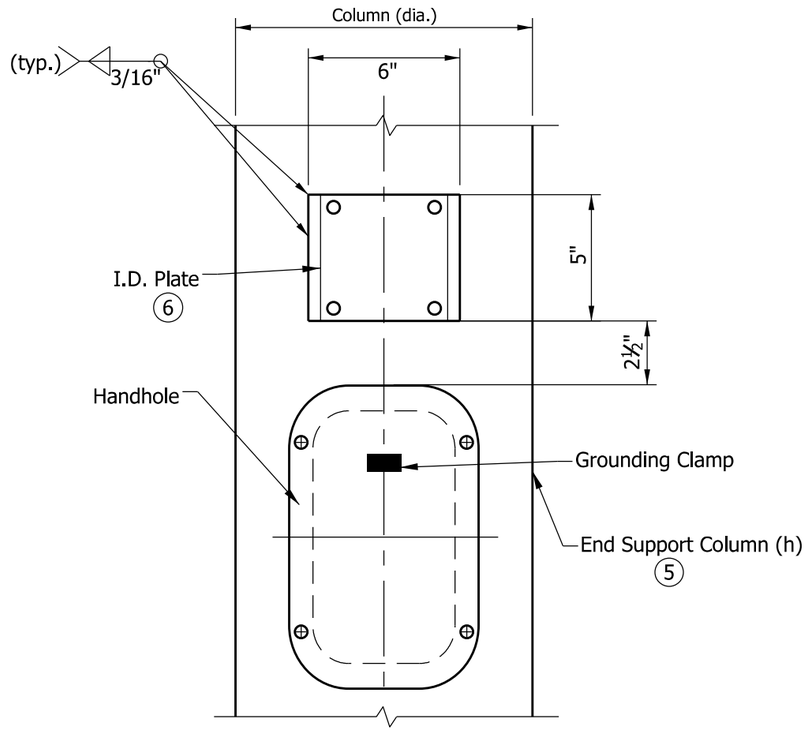

ELEVATION
VIEW FROM HANDHOLE SIDE

NOTES:

1. In lieu of fabricated handhole frame as shown, frame may be cut from 3 in. plate (rolling direction vertical).
2. See Standard Drawing E 802-SNWR Series for grounding details. Grounding post shall be placed on far side of support directly opposite center of handhole.
3. See Standard Drawings E 802-SBTS-02 and 13 for handhole locations.
4. See Standard Drawings E 802-SBTS-03 and 04 for thicknesses of end-support columns (h).
5. Each end support shall have one hand hole placed at the column (h) base and shall be placed nearest to the sign.
6. See Standard Drawing E 802-SBTS-14 for I.D. plate details.

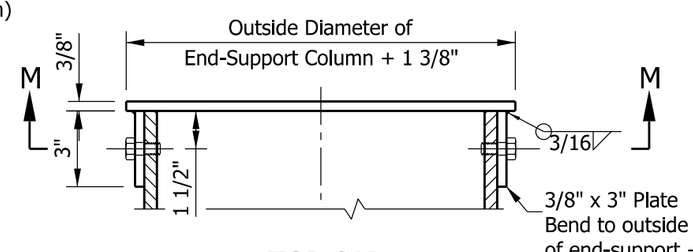

TOP CAP
ELEVATION VIEW

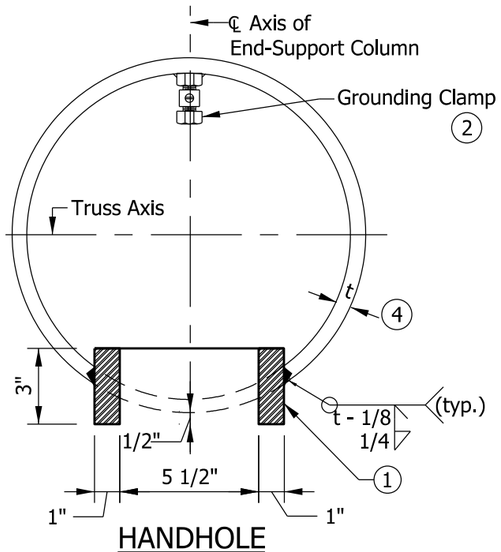

HANDHOLE
SECTION ACROSS COLUMN

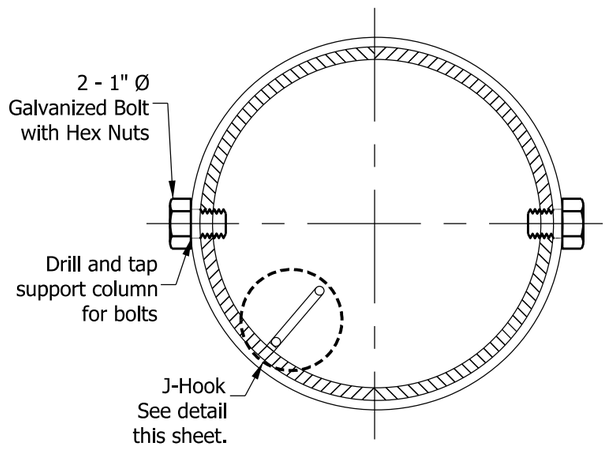

SECTION M-M

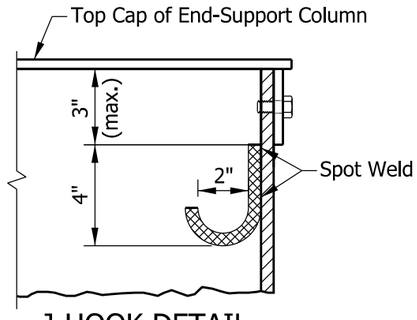

J-HOOK DETAIL

INDIANA DEPARTMENT OF TRANSPORTATION

SIGN BOX TRUSS STRUCTURE
END-SUPPORT
TOP-CAP, HANDHOLE, AND J-HOOK DETAILS
SEPTEMBER 2022

STANDARD DRAWING NO. E 802-SBTS-15

DAVID H. BORUFF REGISTERED No. 60900348 STATE OF INDIANA PROFESSIONAL ENGINEER

David H Boruff 5/17/22
DESIGN STANDARDS ENGINEER DATE

07/07/2022
CHIEF ENGINEER DATE

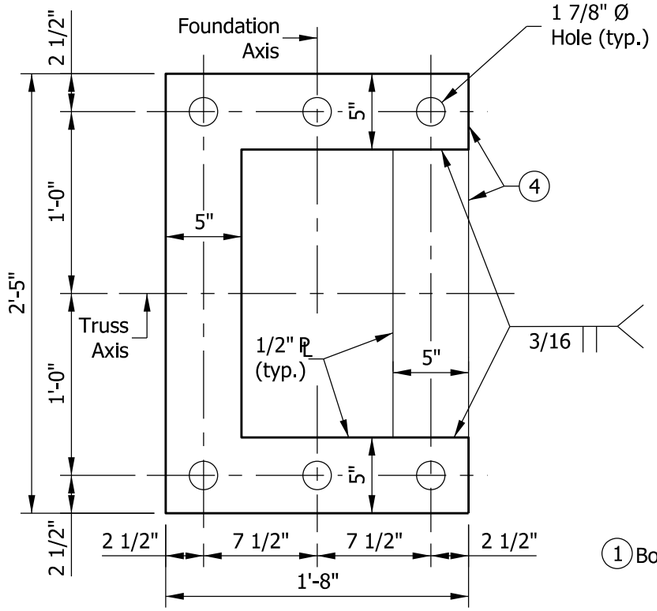

TEMPORARY POSITIONING PLATE

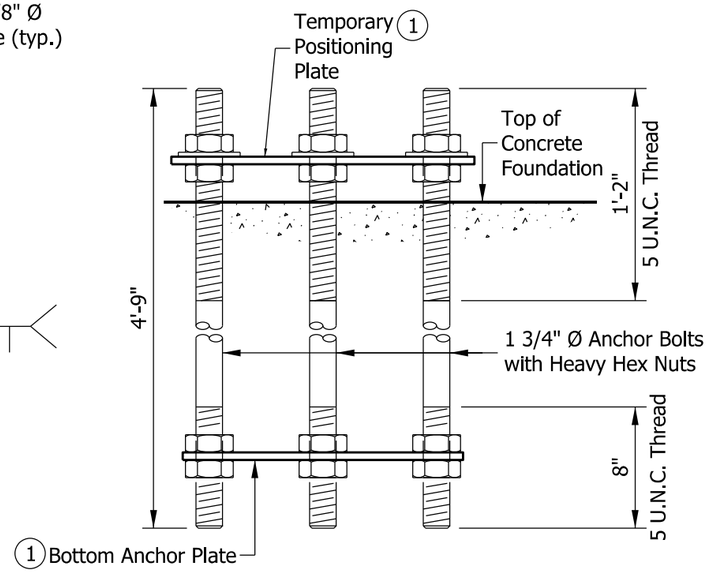

ANCHOR BOLT DETAILS
BEFORE CONCRETE PLACEMENT

NOTES:

1. Temporary positioning plate and bottom anchor plate shall be used for all foundations. Temporary positioning plate shall be removed after placing concrete.
2. Secure galvanized metal skirt shall be secured to base plate after erection as shown in skirt detail.
3. Minimum base plate gap shall be 2 ½ in. and can be increased up to 5 ½ in. Metal skirt width shall be at least 1 ½ in. more than the actual gap.
4. May use four separate 5 in. plates welded together to maintain angles and shape as shown.
5. May use two separate 3 in. and two separate 5 in. plates welded together to maintain angles and shape as shown.
6. See Standard Drawings E 802-SBTS-13 for end support base plate details.
7. See Standard Drawing E 802-SBTS-17 for anchor bolt hardware tightening requirements.

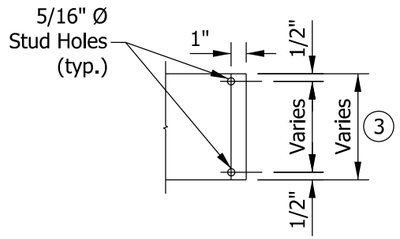

DETAIL G

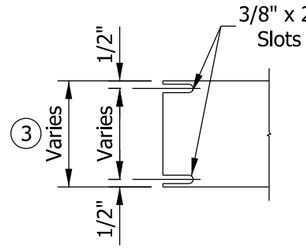

DETAIL H

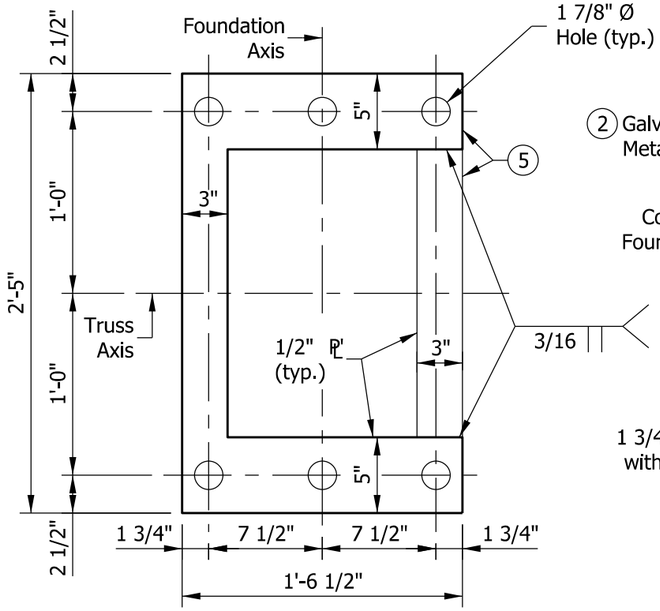

BOTTOM ANCHOR PLATE

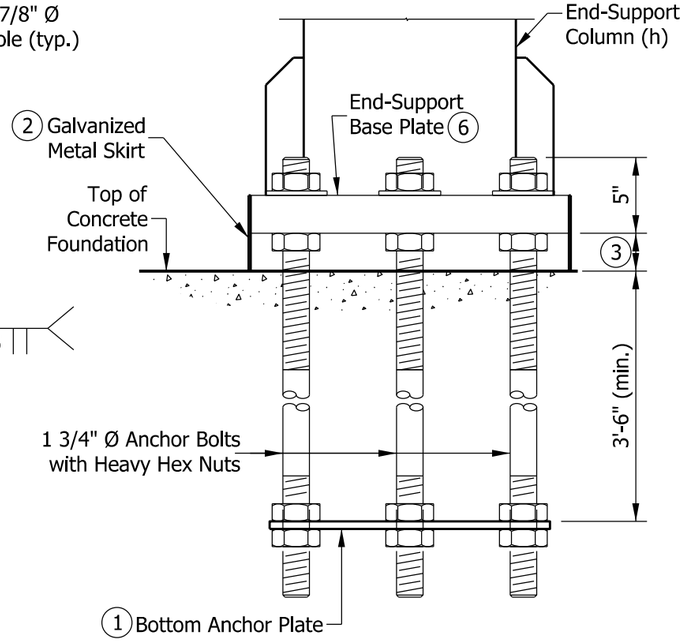

ANCHOR BOLT DETAILS
AFTER CONCRETE PLACEMENT

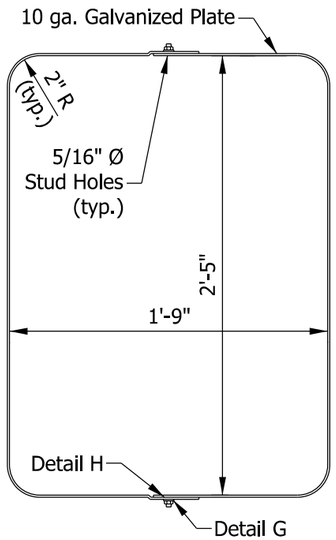

METAL SKIRT DETAIL

INDIANA DEPARTMENT OF TRANSPORTATION

SIGN BOX TRUSS STRUCTURE
END-SUPPORT
ANCHOR BOLT AND METAL SKIRT DETAILS
SEPTEMBER 2022

STANDARD DRAWING NO. E 802-SBTS-16

DAVID H. BORUFF REGISTERED No. 60900348 STATE OF INDIANA PROFESSIONAL ENGINEER

David H Boruff 5/17/22
DESIGN STANDARDS ENGINEER DATE

07/07/2022
CHIEF ENGINEER DATE

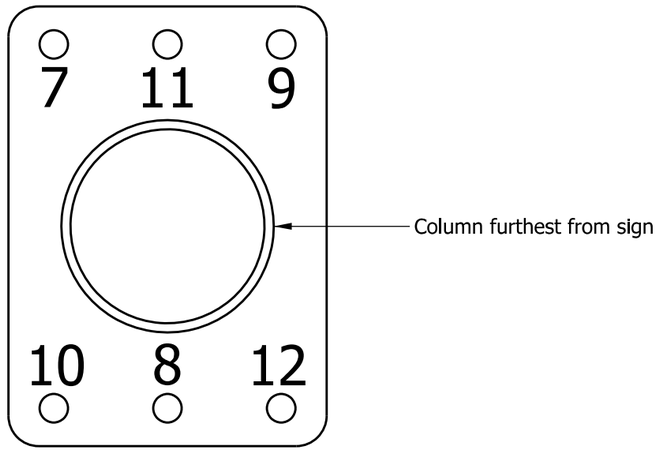

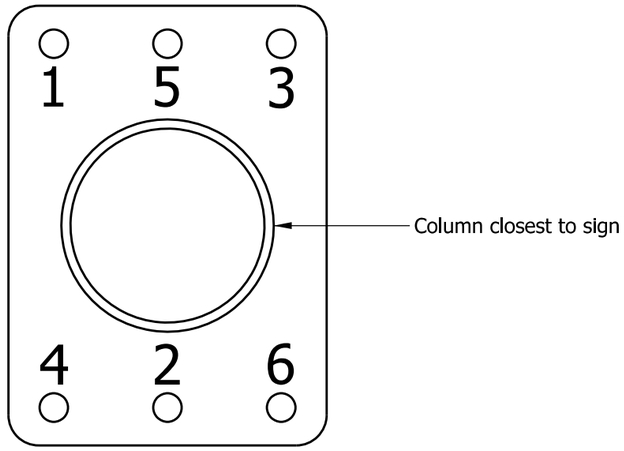

STAR PATTERN
TIGHTENING SEQUENCE

NOTES:

1. Anchor bolts shall be clean and not damaged or out of plumb.
2. Threaded portion of anchor bolts shall be lubricated within 24 hours of tightening; approved lubricant shall be used and shall be applied in accordance with lubricant manufacturers recommendations.
3. The bottom of leveling nuts shall be less than 1 ¾ in. from the foundation (unless stated otherwise on the plans).
4. While holding the leveling nuts with a wrench, the top nuts shall be snug tightened (brought into full contact with the base plate). Then the leveling nuts shall be snug-tightened. Then the top nuts and base plate shall be marked and the nuts further tightened (pre-tensioned) by a minimum 1/6 turn.
5. No sooner than 10 minutes after the installation of the truss on the end bents, top and leveling nuts shall be retightened as needed.
6. All tightening shall be done in the order shown.

INDIANA DEPARTMENT OF TRANSPORTATION

SIGN BOX TRUSS STRUCTURE
END SUPPORT ANCHOR BOLT
HARDWARE TIGHTENING

SEPTEMBER 2022

STANDARD DRAWING NO. E 802-SBTS-17

DAVID H. BORUFF
REGISTERED
No.
60900348
STATE OF
INDIANA
PROFESSIONAL ENGINEER

David H Boruff 5/17/22
DESIGN STANDARDS ENGINEER DATE

07/07/2022
CHIEF ENGINEER DATE

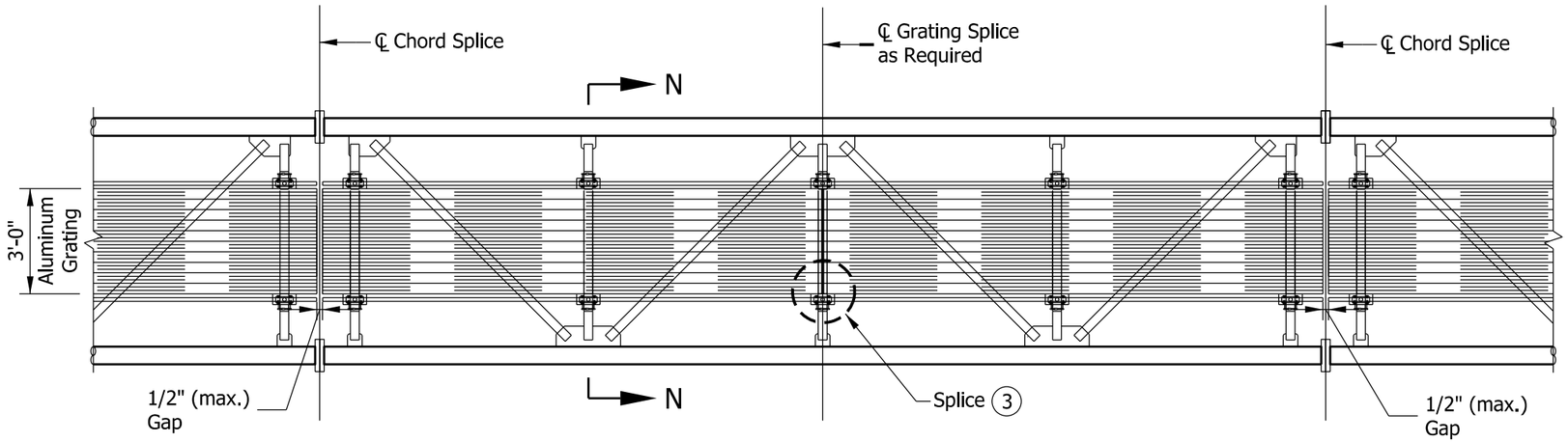

INTERIOR WALKWAY GRATING PLAN

NOTES:

1. Interior walkway gratings shall be extruded I-bars 2 in. x ¼ in. x 1 3/16 in. center-to-center. Cross bars shall have a maximum gap of 4 in. Moment of Inertia, I_x = 1.382 in^4. A different grating of equal strength may be used upon approval by the engineer.

(2) Walkway grating width is nominal and may vary ±1/2 in. based on available standard widths.

(3) Interior walkway gratings can be spliced on center of any horizontal truss member as needed. See Standard Drawing E 802-SBTS-19 for typical interior walkway grating splice detail.

4. Interior walkway grating shall run the full length, center-to-center, of end-support truss members plus 9 in. at each end.

(5) Drain holes shall be as detailed on Standard Drawing E 802-SBTS-23, including placement on the horizontal handrail pipes.

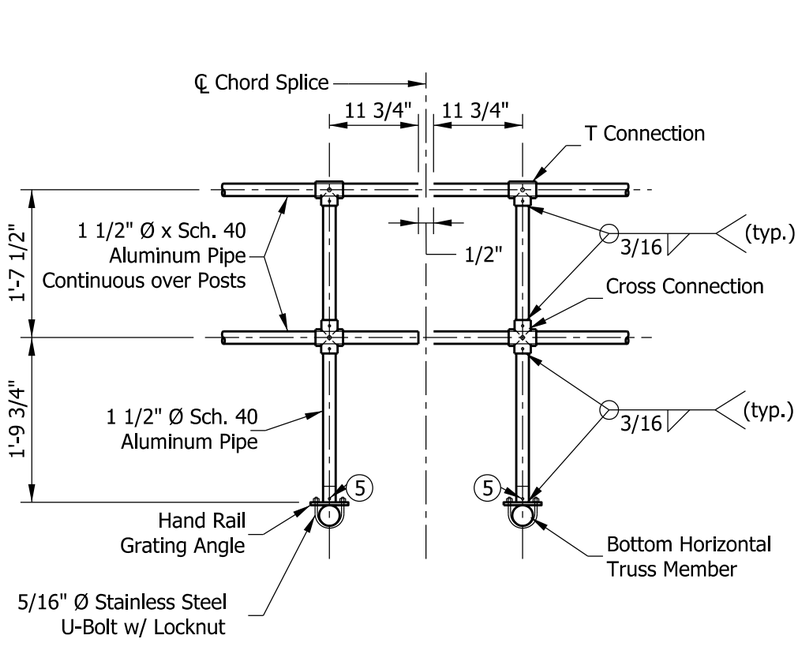

TYPICAL HANDRAIL DETAIL

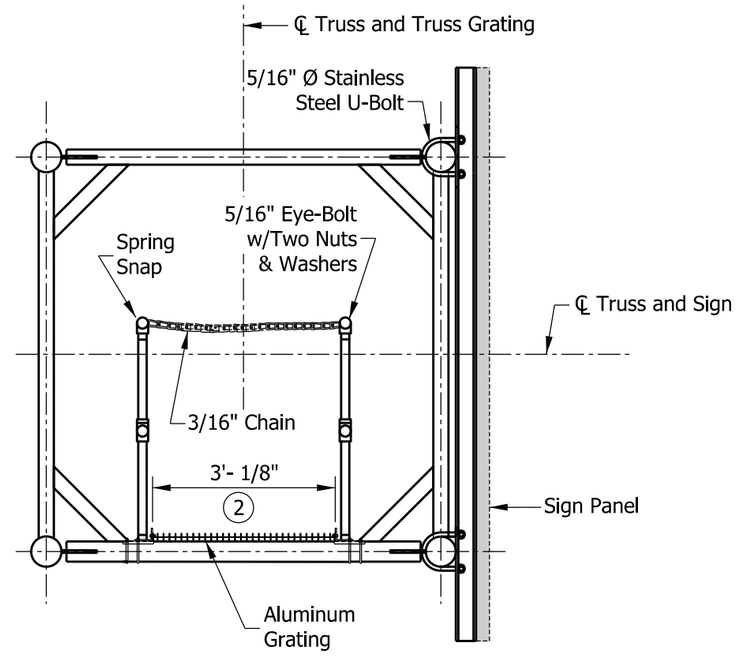

SECTION N-N

INDIANA DEPARTMENT OF TRANSPORTATION

SIGN BOX TRUSS STRUCTURE
INTERIOR WALKWAY GRATING & HANDRAIL DETAILS
SEPTEMBER 2022

STANDARD DRAWING NO. E 802-SBTS-18

DAVID H. BORUFF
REGISTERED
No. 60900348
STATE OF INDIANA
PROFESSIONAL ENGINEER

David H Boruff 5/17/22
DESIGN STANDARDS ENGINEER DATE

07/07/2022
CHIEF ENGINEER DATE

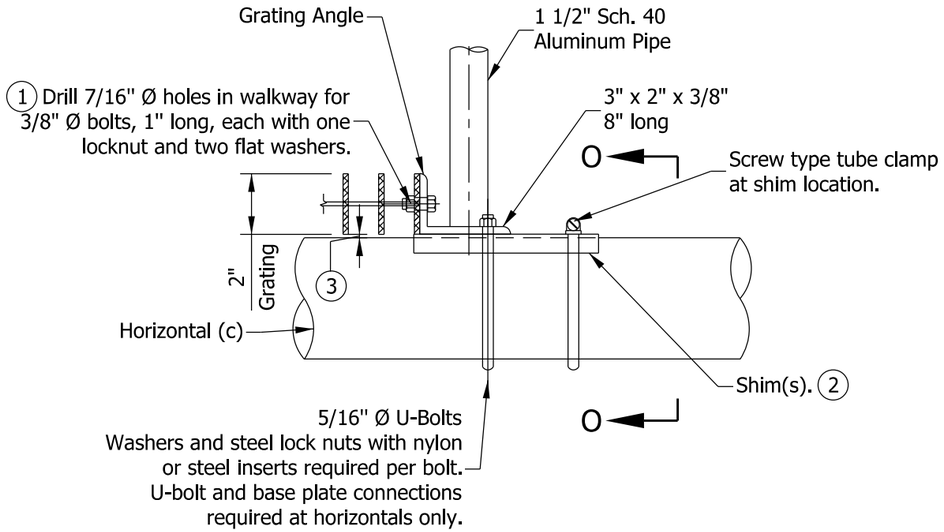

GRATNG SUPPORT DETAIL

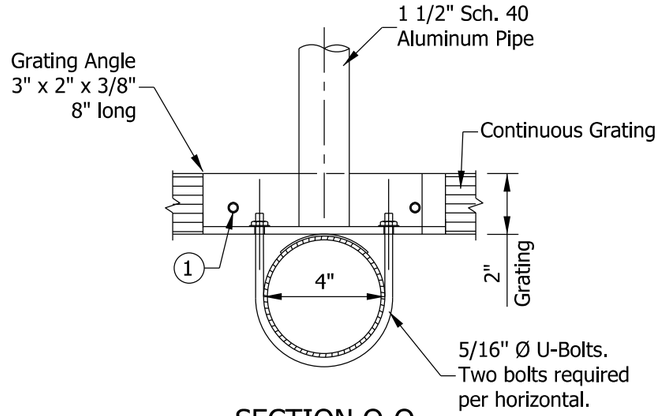

SECTION O-O

NOTES:

1. Drilling of holes in grating may be done in shop or field, based on Contractor's preference and subject to and shall provide accurate alignment.
2. Shims may be placed as shown, if needed to compensate for alignment variations between horizontal and diagonal pipes beyond adjustment provided by angles. Thicker shims may be used subject to shims performing properly.
3. Tube-to-grating gap may vary from 0 to ½ in. max. to align walkway, allow for camber.

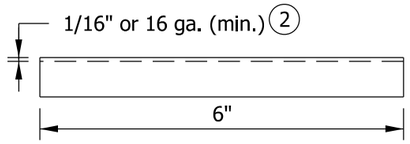

ELEVATION

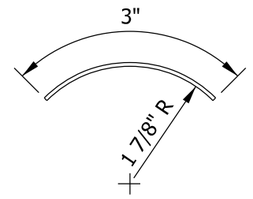

END VIEW

SHIM DETAIL

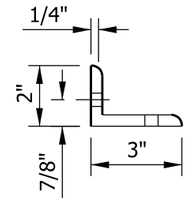

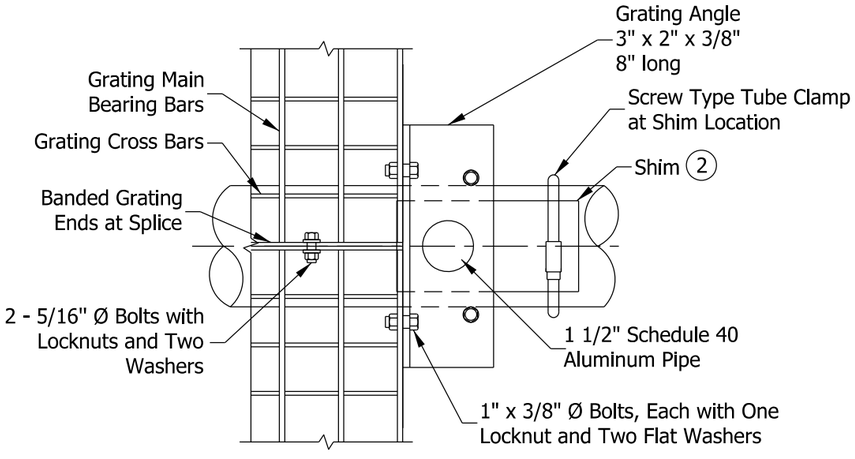

GRATING SPLICE DETAIL

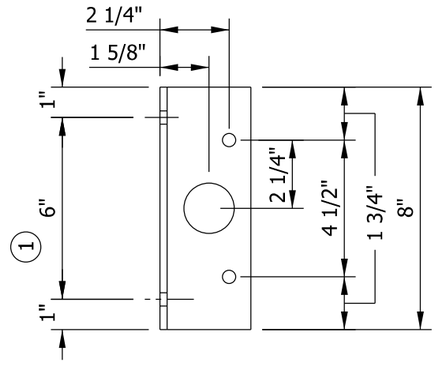

GRATING ANGLE

INDIANA DEPARTMENT OF TRANSPORTATION

SIGN BOX TRUSS STRUCTURE
INTERIOR WALKWAY GRATING DETAILS

SEPTEMBER 2022

STANDARD DRAWING NO. E 802-SBTS-19

DAVID H. BORUFF
REGISTERED
No.
60900348
STATE OF
INDIANA
PROFESSIONAL ENGINEER

David H Boruff 5/17/22
DESIGN STANDARDS ENGINEER DATE

07/07/2022
CHIEF ENGINEER DATE

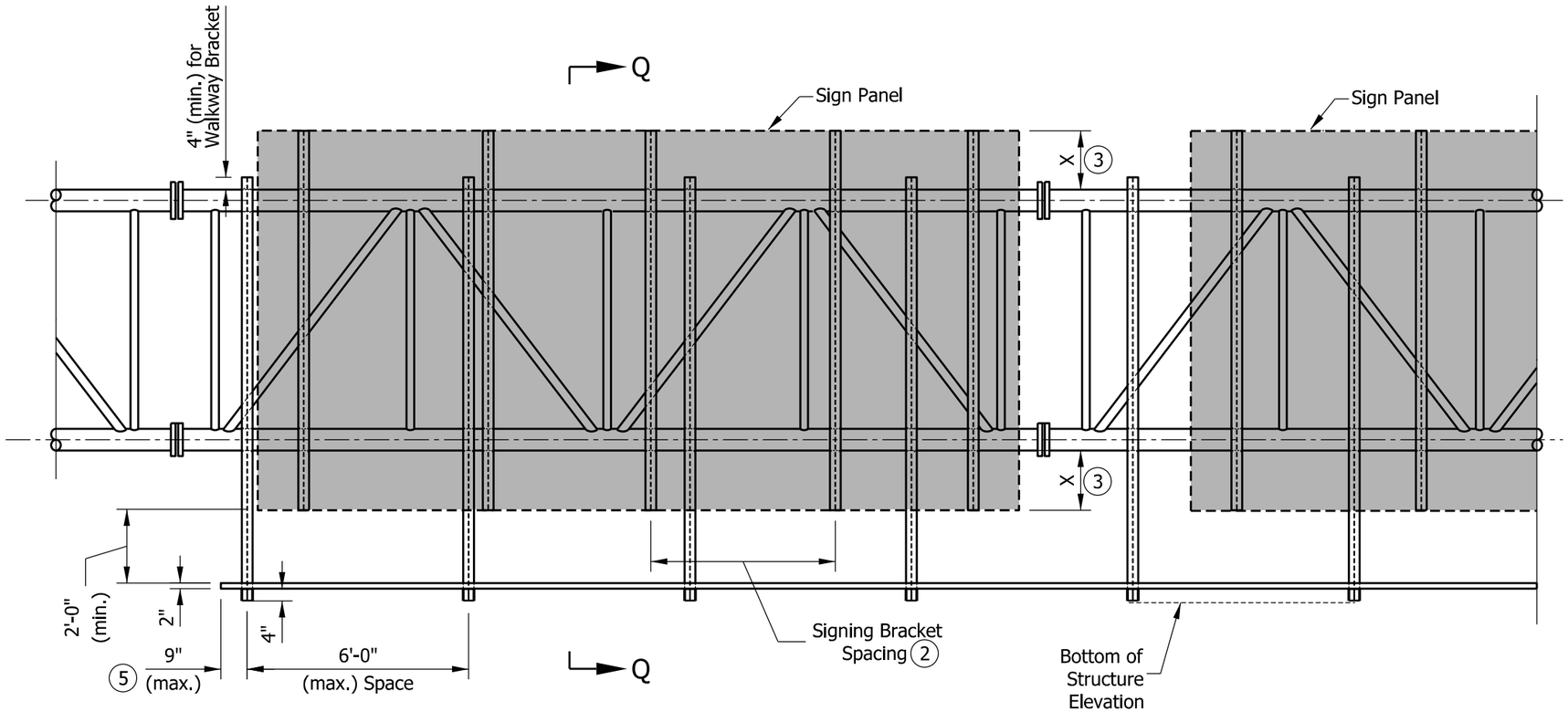

TYPICAL LIGHTING WALKWAY FRONT ELEVATION

(Lighting walkway and handrail provided only when specified in the plans)

NOTES:

1. For location and data for sign panels, see plan details cross section.

(2) Sign bracket spacing 5 ft max.

(3) Dimension X depends on the height of the sign. Sign shall be centered vertically on truss.

4. See Standard Drawing E 802-SBTS-21 for Plan, and E 802-SBTS-22 for Section Q-Q.

(5) Sign shall be installed on truss with independent brackets WF (A-N) 4 x 3.06 for signs ≤ 18 ft in height. For signs > 18 ft and ≤ 25 ft use WF (A-N) 5 x 5.36. Lighting walkway may be extended to comply with the 9 in. maximum unsupported grating.

INDIANA DEPARTMENT OF TRANSPORTATION

SIGN BOX TRUSS STRUCTURE
LIGHTING WALKWAY ELEVATION

SEPTEMBER 2022

STANDARD DRAWING NO. E 802-SBTS-20

DAVID H. BORUFF REGISTERED No. 60900348 STATE OF INDIANA PROFESSIONAL ENGINEER

David H Boruff 5/17/22
DESIGN STANDARDS ENGINEER DATE

07/07/2022
CHIEF ENGINEER DATE

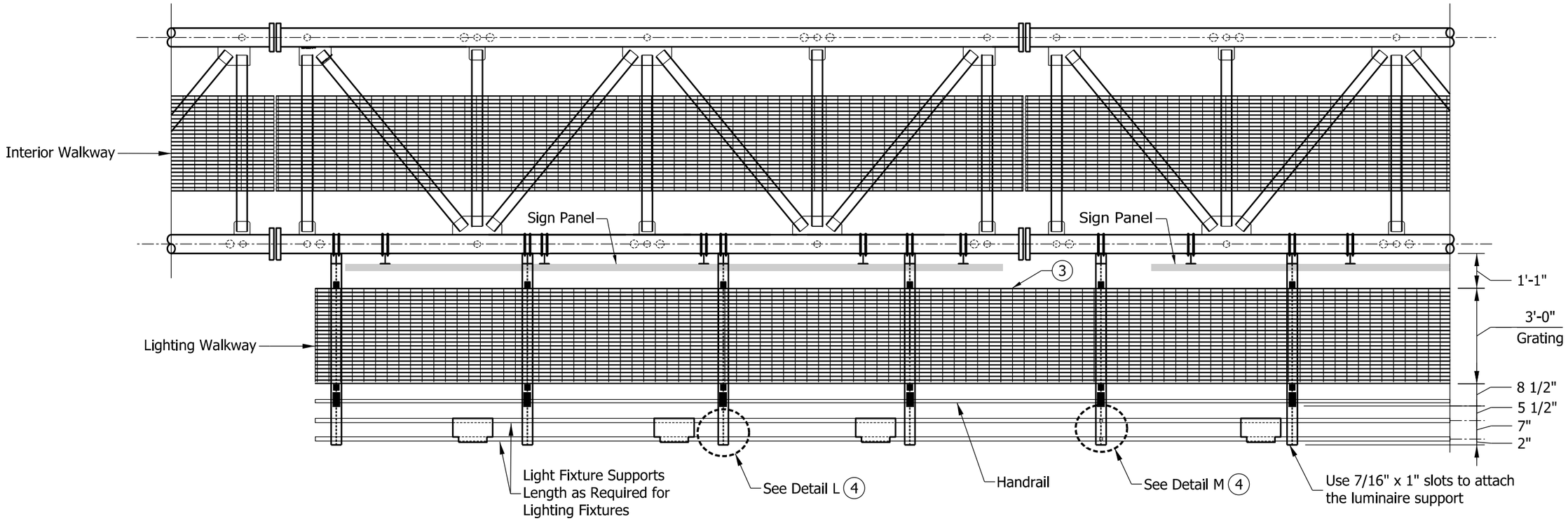

PLAN VIEW

(Lighting walkway and handrail provided only when specified in the plans)

NOTES:

1. Handrail and grating shall span a minimum of 3 brackets.
2. Grating splice shall be located on center of L-bracket only. See Standard Drawing E 802-SBTS-25, Detail M.

(3) Lighting walkway gratings are extruded I-bars 2 in. x ¼ in. spaced at 1 $^{3}/_{16}$ in. center-to-center. $_{4}$Cross bars shall have a maximum gap of 4 in. Moment of Inertia, I_x = 1.382 in. A different grating of equal strength may be used upon approval.

(4) See Standard Drawing E 802-SBTS-25, Details L & M.

INDIANA DEPARTMENT OF TRANSPORTATION

SIGN BOX TRUSS STRUCTURE
LIGHTING WALKWAY PLAN

SEPTEMBER 2022

STANDARD DRAWING NO. E 802-SBTS-21

DAVID H. BORUFF REGISTERED No. 60900348 STATE OF INDIANA PROFESSIONAL ENGINEER

David H Boruff 5/17/22
DESIGN STANDARDS ENGINEER DATE

07/07/2022
CHIEF ENGINEER DATE

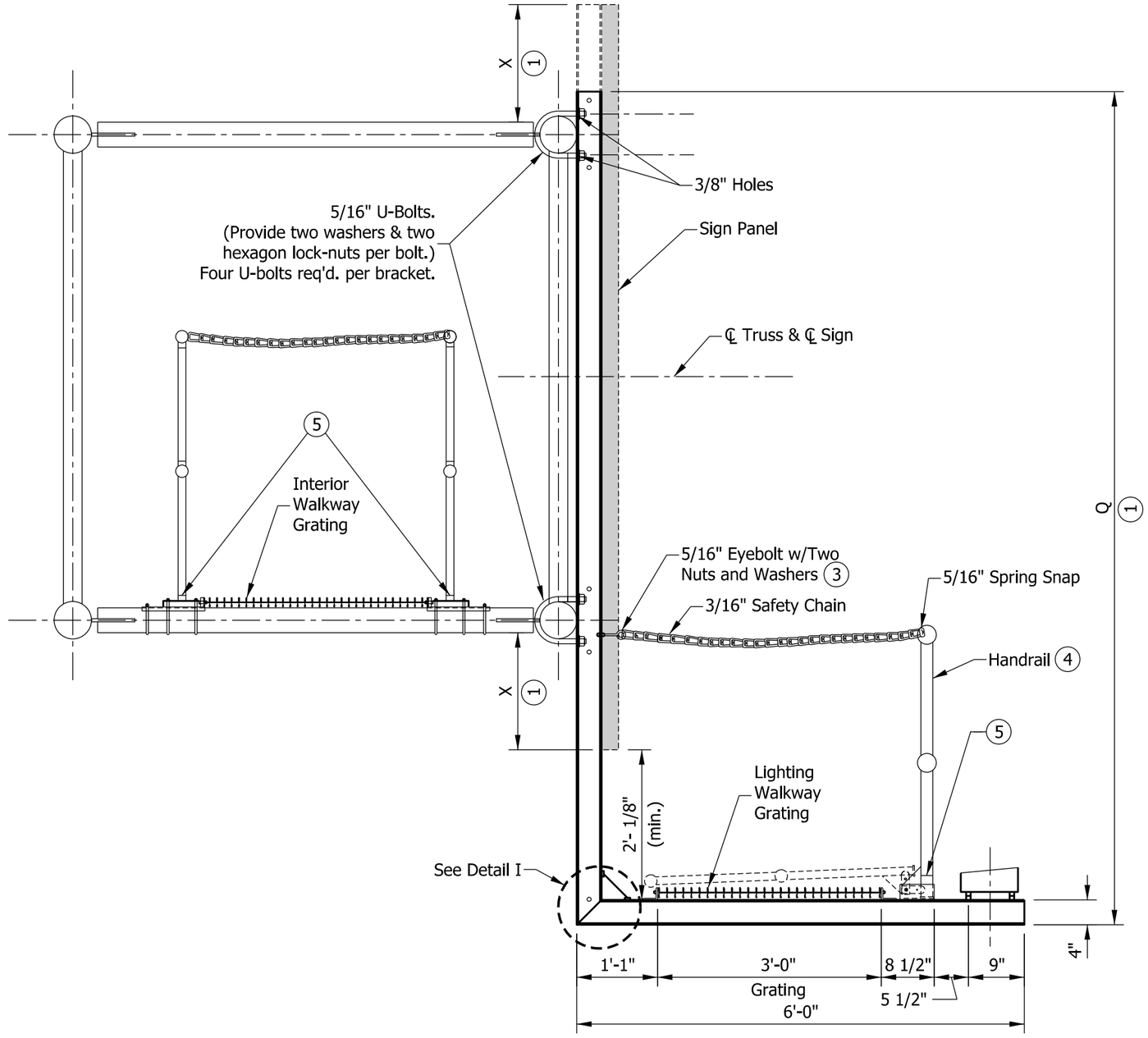

SECTION Q-Q

(Lighting walkway provided only when specified on plan)

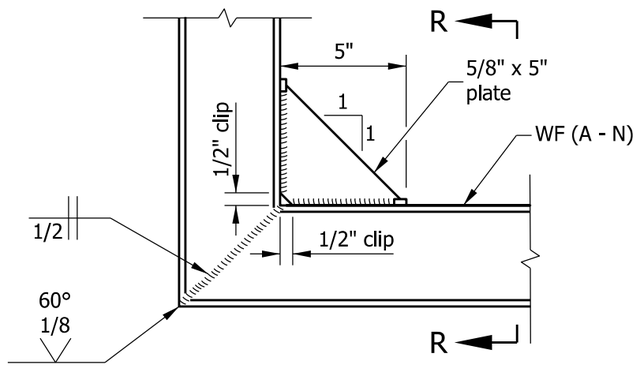

DETAIL I

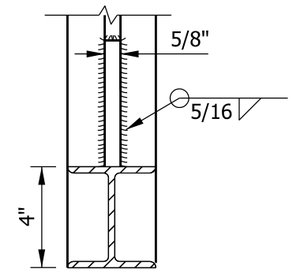

SECTION R-R

NOTES:

1. Dimensions X and Q shall be determined by Contractor to fit signs.
2. Sign panel shall be placed symmetrically about centerline of truss.
3. Eyebolt shall be attached to web of bracket at approximate elevation of upper handrail pipe.
4. See Standard Drawing E 802-SBTS-23 for handrail interior walkway.
5. Drain hole, See Standard Drawing E 802-SBTS-23

INDIANA DEPARTMENT OF TRANSPORTATION

SIGN BOX TRUSS STRUCTURE
LIGHTING WALKWAY PROFILE

SEPTEMBER 2022

STANDARD DRAWING NO. E 802-SBTS-22

DAVID H. BORUFF
REGISTERED
No. 60900348
STATE OF INDIANA
PROFESSIONAL ENGINEER

David H Boruff 5/17/22
DESIGN STANDARDS ENGINEER DATE

07/07/2022
CHIEF ENGINEER DATE

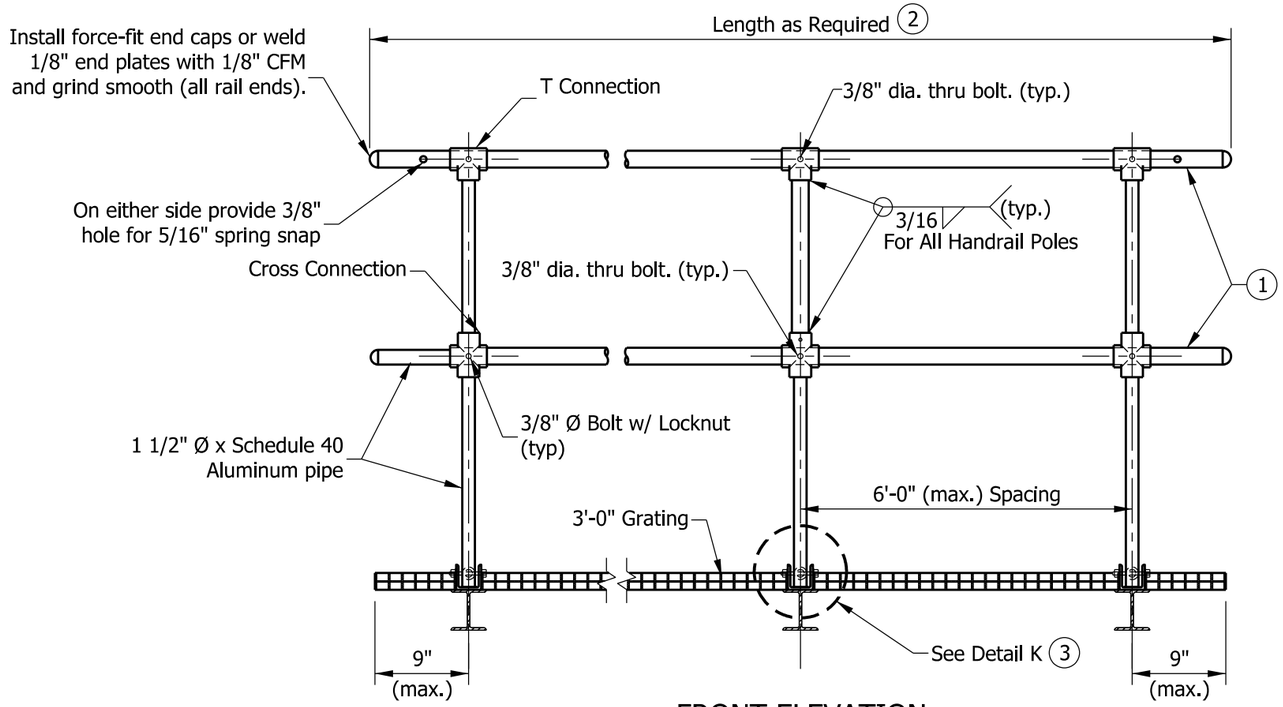

FRONT ELEVATION

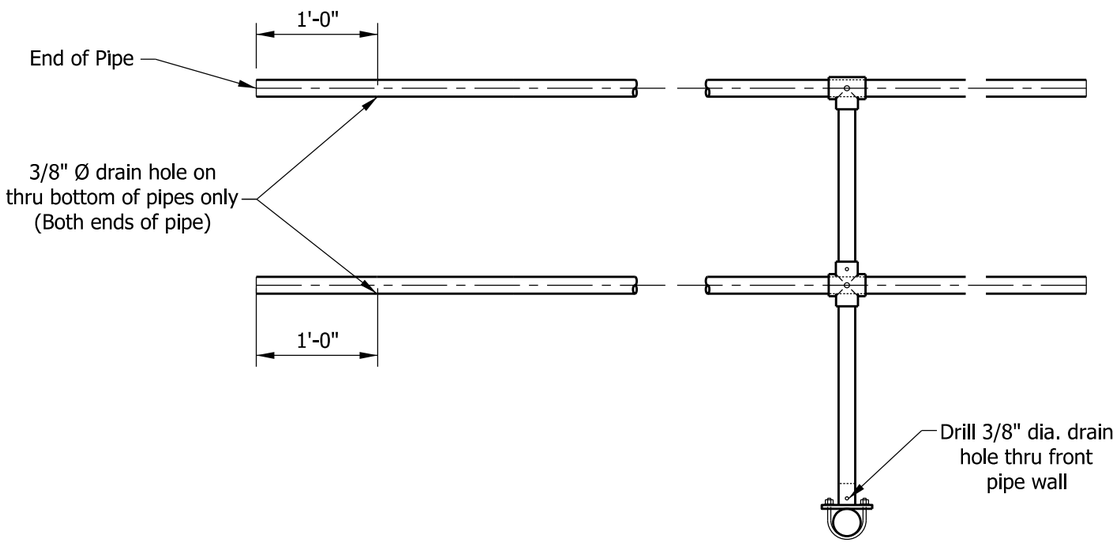

HANDRAIL DRAIN HOLES DETAIL

NOTES:

(1) Horizontal rail member shall be continuous through fitting. Manufacturer shall provide 7/16 in. holes for fitting 3/8 in. bolt. Field drill 7/16 in. hole in horizontal rail member. Attach handrail with 3/8 in. bolt, washer, and locknut.

(2) Rail and grating shall span a minimum of three brackets.

(3) See Standard Drawing E 802-SBTS-24 for Detail J & K.

4. Lighting walkway and handrail provided only when specified on the plans.

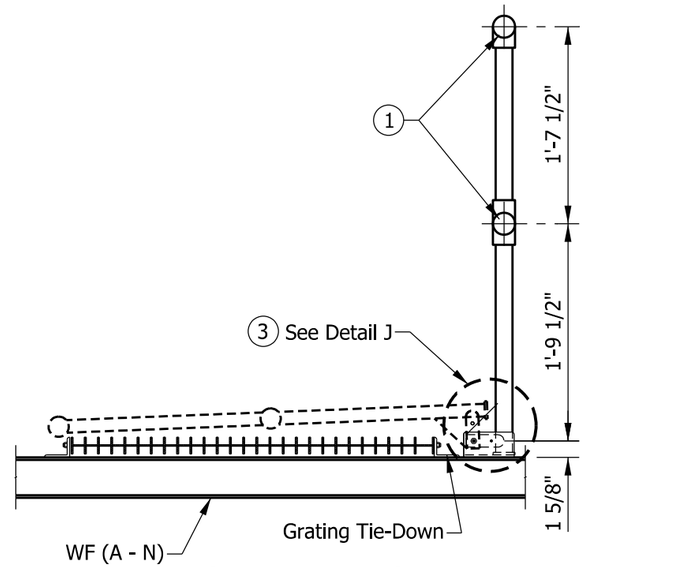

SIDE ELEVATION

INDIANA DEPARTMENT OF TRANSPORTATION

SIGN BOX TRUSS STRUCTURE
LIGHTING WALKWAY AND
HANDRAIL ASSEMBLY

SEPTEMBER 2022

STANDARD DRAWING NO. E 802-SBTS-23

DAVID H. BORUFF REGISTERED No. 60900348 STATE OF INDIANA PROFESSIONAL ENGINEER

David H Boruff 5/17/22
DESIGN STANDARDS ENGINEER DATE

07/07/2022
CHIEF ENGINEER DATE

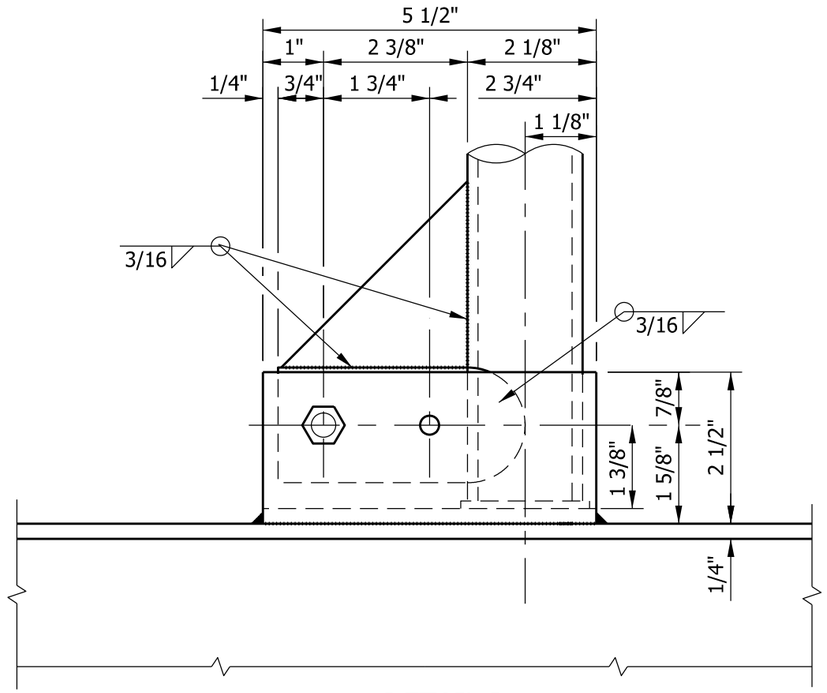

DETAIL J
SIDE ELEVATION

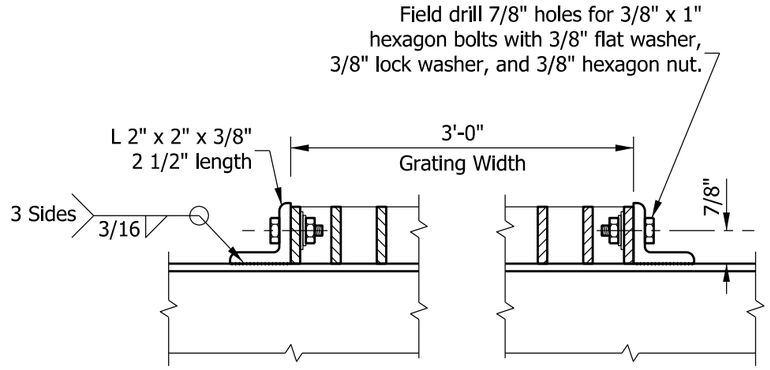

GRATING TIE DOWN
(Two req'd per walkway bracket)

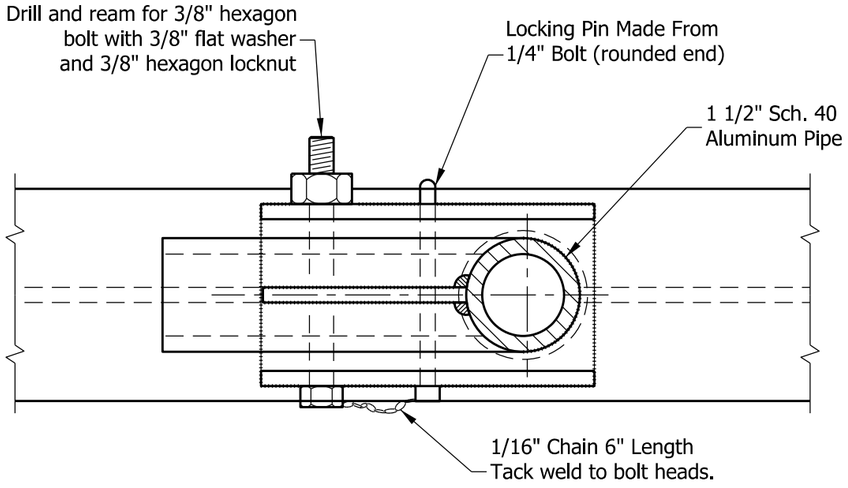

PLAN
DETAILS OF HANDRAIL HINGE

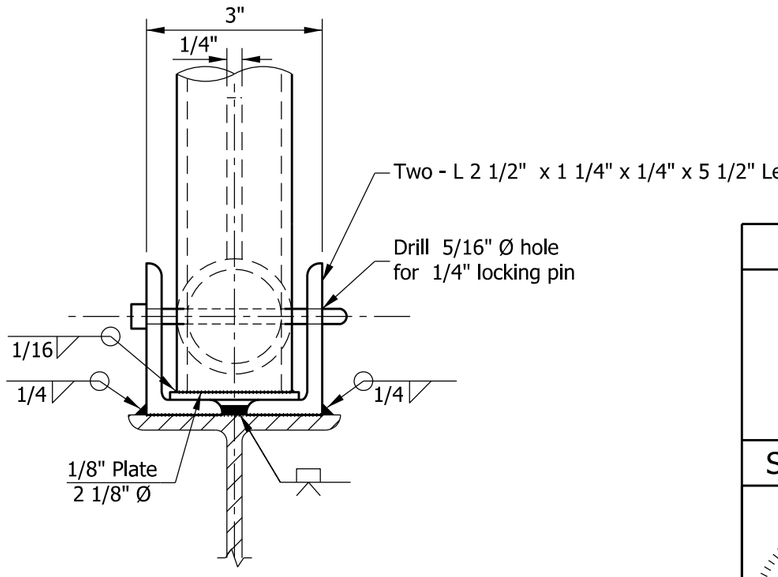

DETAIL K
FRONT ELEVATION

INDIANA DEPARTMENT OF TRANSPORTATION

SIGN BOX TRUSS STRUCTURE
LIGHTING WALKWAY, HANDRAIL HINGE, AND GRATING DETAILS
SEPTEMBER 2022

STANDARD DRAWING NO. E 802-SBTS-24

DAVID H. BORUFF
REGISTERED
No. 60900348
STATE OF INDIANA
PROFESSIONAL ENGINEER

David H Boruff 5/17/22
DESIGN STANDARDS ENGINEER DATE

07/07/2022
CHIEF ENGINEER DATE

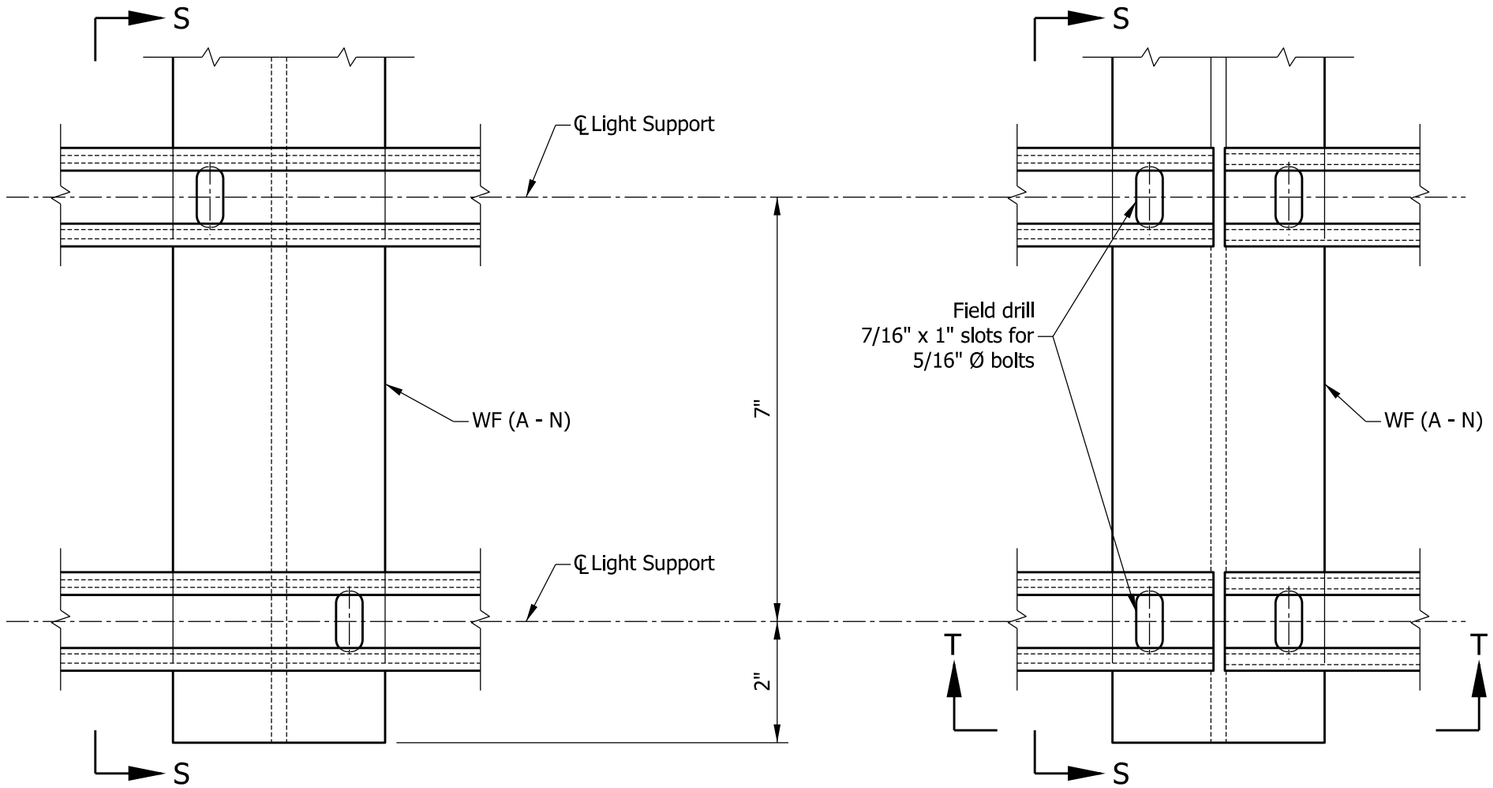

DETAIL L

DETAIL M

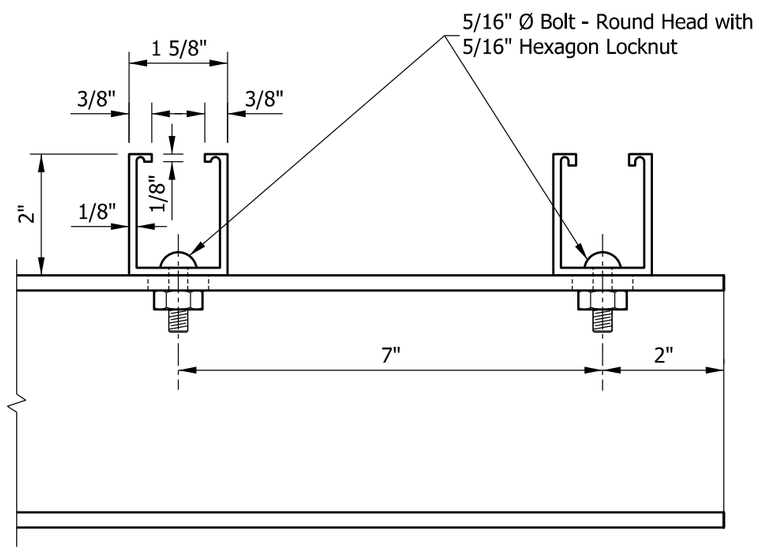

SECTION S-S

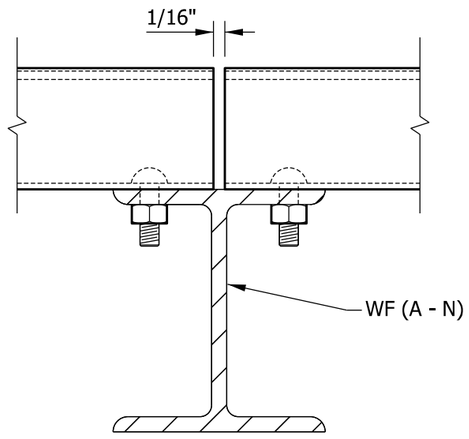

SECTION T-T

INDIANA DEPARTMENT OF TRANSPORTATION

SIGN BOX TRUSS STRUCTURE
LIGHTING WALKWAY
FIXTURE MOUNT DETAILS
SEPTEMBER 2022

STANDARD DRAWING NO. E 802-SBTS-25

DAVID H. BORUFF
REGISTERED
No. 60900348
STATE OF INDIANA
PROFESSIONAL ENGINEER

David H Boruff 5/17/22
DESIGN STANDARDS ENGINEER DATE

07/07/2022
CHIEF ENGINEER DATE

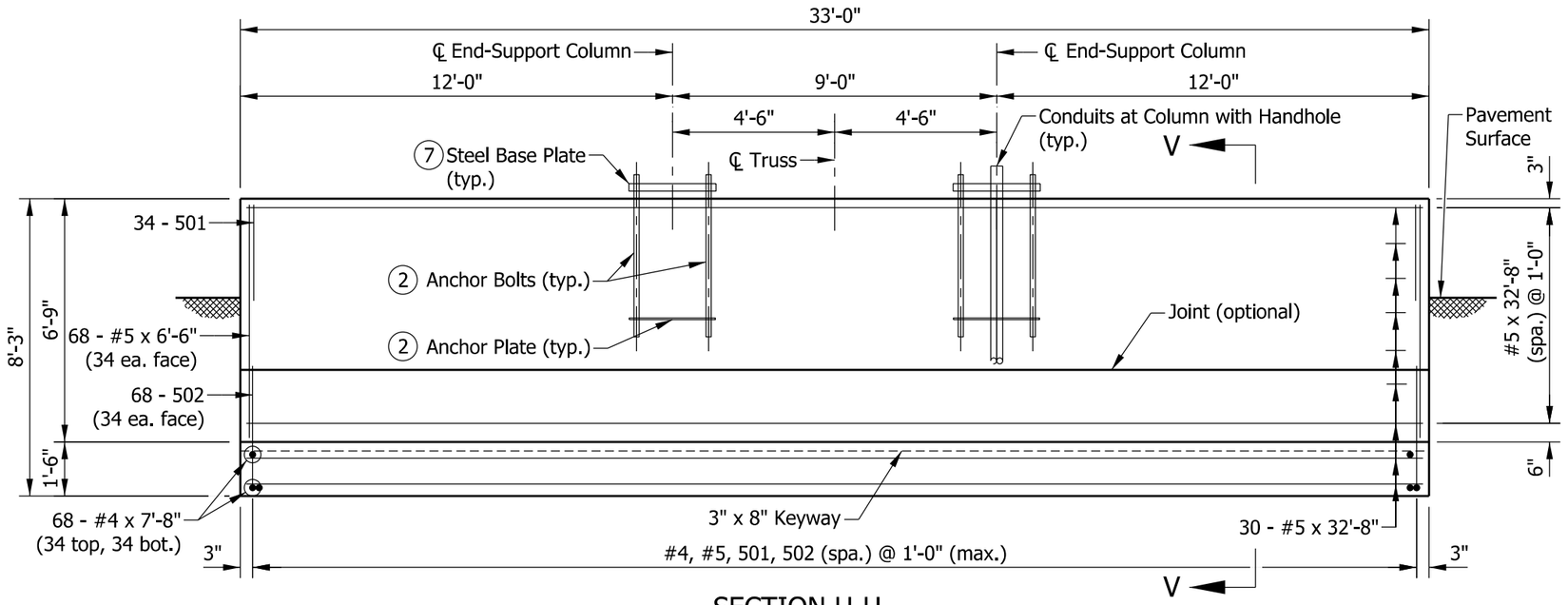

SECTION U-U

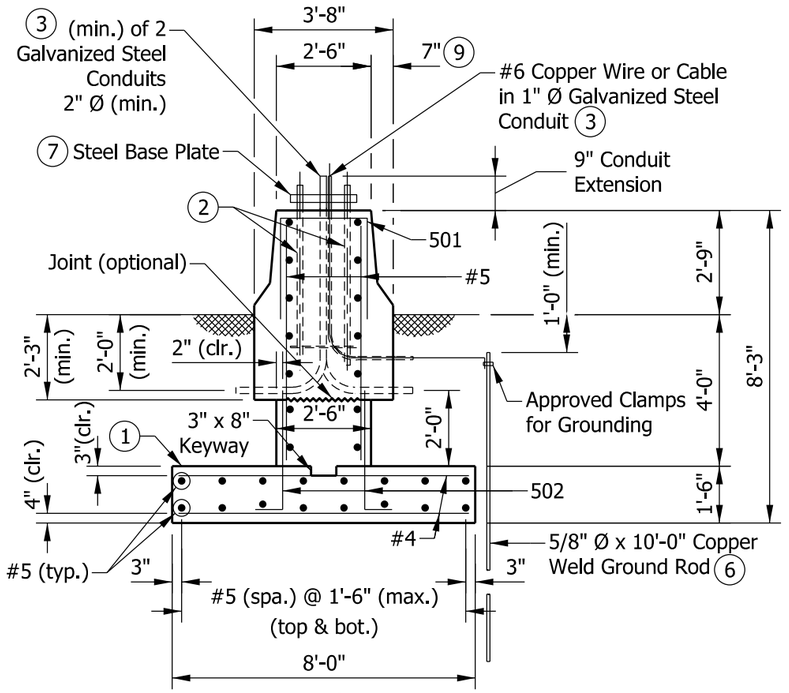

SECTION V-V

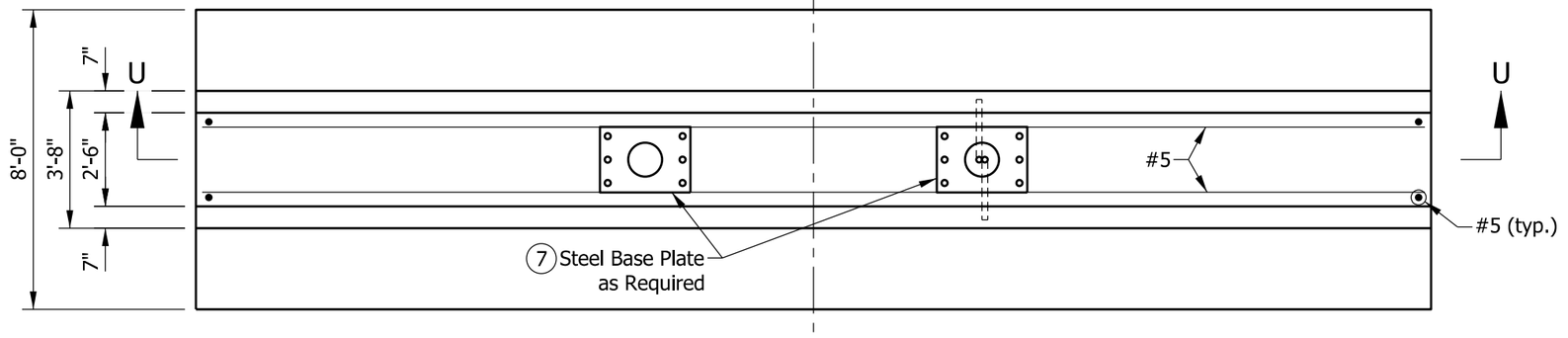

PLAN

NOTES:

1. Top of the footing shall be a minimum of 4 ft - 0 in. below the pavement or ground surface.
2. See Standard Drawing E 802-SBTS-16 for anchor bolt and anchor plate details.
3. Both ends of steel conduit shall be capped.
4. See Standard Drawing E 802-SBTS-29 for quantities.
5. See Standard Drawing E 703-BRST series for reinforcing-bar bending details and notes.
6. Only one ground rod per structure is required.
7. See Standard Drawing E 602-CCMB series for barrier wall width transition.
8. Minimum concrete strength f'c = 3500 psi
9. See Standard Drawing E 602-CCMB series for barrier wall width transition.

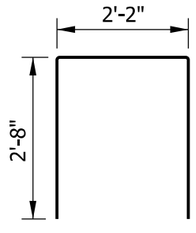

501 x 7'-6"

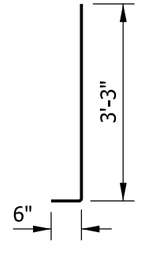

502 x 3'-9"

INDIANA DEPARTMENT OF TRANSPORTATION

SIGN BOX TRUSS STRUCTURE A-E
SPREAD FOUNDATION
AT 33" CONCRETE BARRIER WALL
SEPTEMBER 2022

STANDARD DRAWING NO. E 802-SBTS-26

DAVID H. BORUFF REGISTERED No. 60900348 STATE OF INDIANA PROFESSIONAL ENGINEER

David H Boruff 5/17/22
DESIGN STANDARDS ENGINEER DATE

07/07/2022
CHIEF ENGINEER DATE

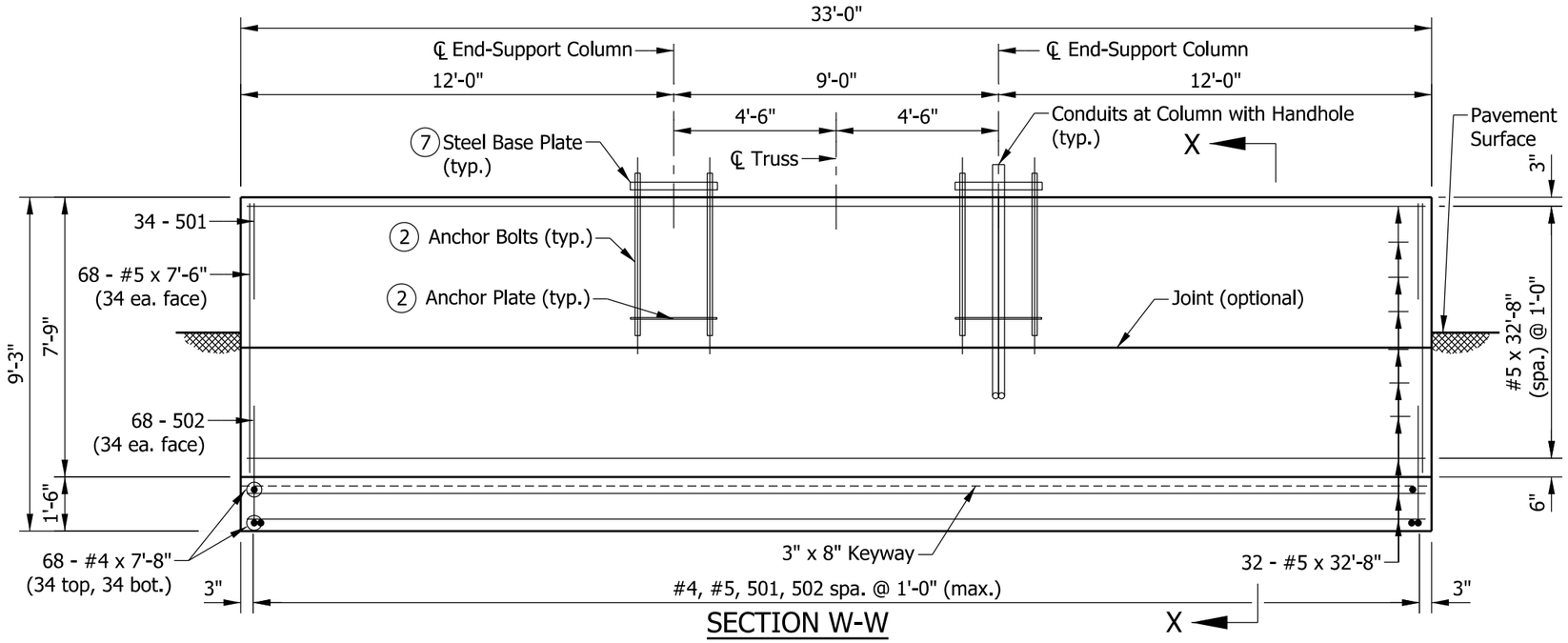

SECTION W-W

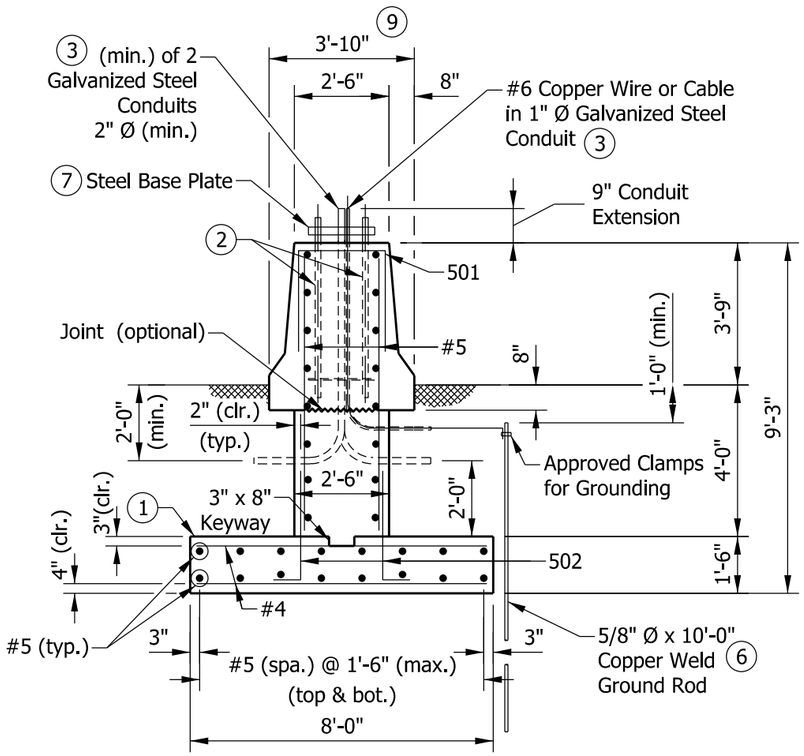

SECTION X-X

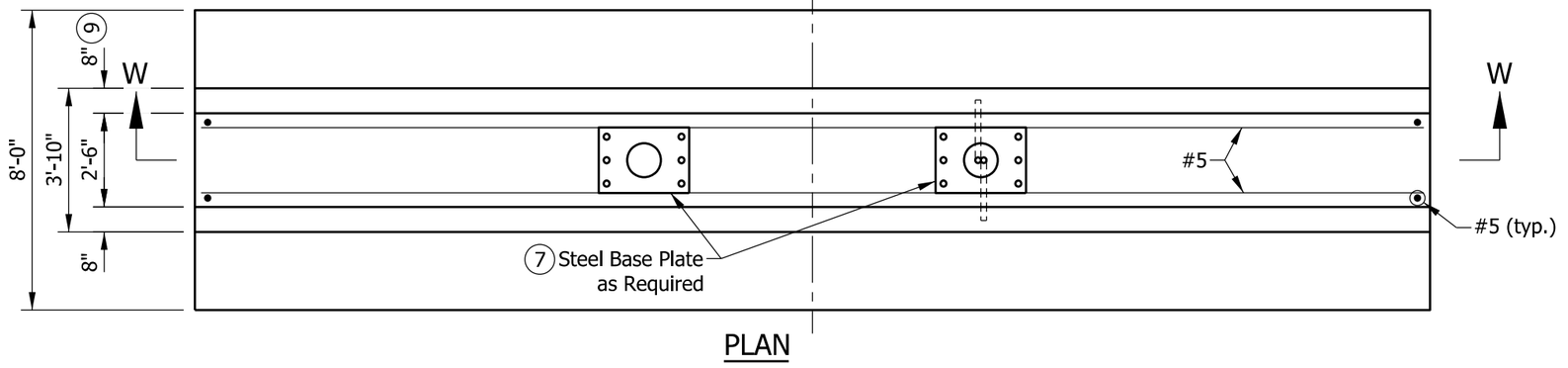

PLAN

NOTES:

1. Top of the footing shall be a minimum of 4 ft - 0 in. below the pavement or ground surface.
2. See Standard Drawing E 802-SBTS-16 for anchor bolt and anchor plate details.
3. Both ends of steel conduit shall be capped.
4. See Standard Drawing E 802-SBTS-29 for quantities.
5. See Standard Drawing E 703-BRST series for reinforcing-bar bending details and notes.
6. Only one ground rod per structure is required.
7. See Standard Drawing E 802-SBTS-13 for base plate details.
8. Minimum concrete strength f'c = 3500 psi.
9. See Standard Drawing E 602-CCMB series for barrier wall width transition.

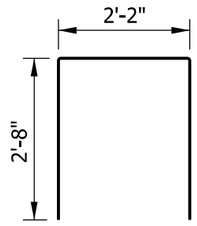

501 x 7'-6"

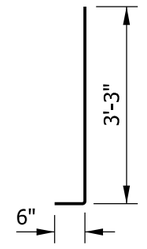

502 x 3'-9"

INDIANA DEPARTMENT OF TRANSPORTATION

SIGN BOX TRUSS STRUCTURE A-E
SPREAD FOUNDATION
AT 45" CONCRETE BARRIER WALL
SEPTEMBER 2022

STANDARD DRAWING NO. E 802-SBTS-27

DAVID H. BORUFF REGISTERED No. 60900348 STATE OF INDIANA PROFESSIONAL ENGINEER

David H Boruff 5/17/22
DESIGN STANDARDS ENGINEER DATE

07/07/2022
CHIEF ENGINEER DATE

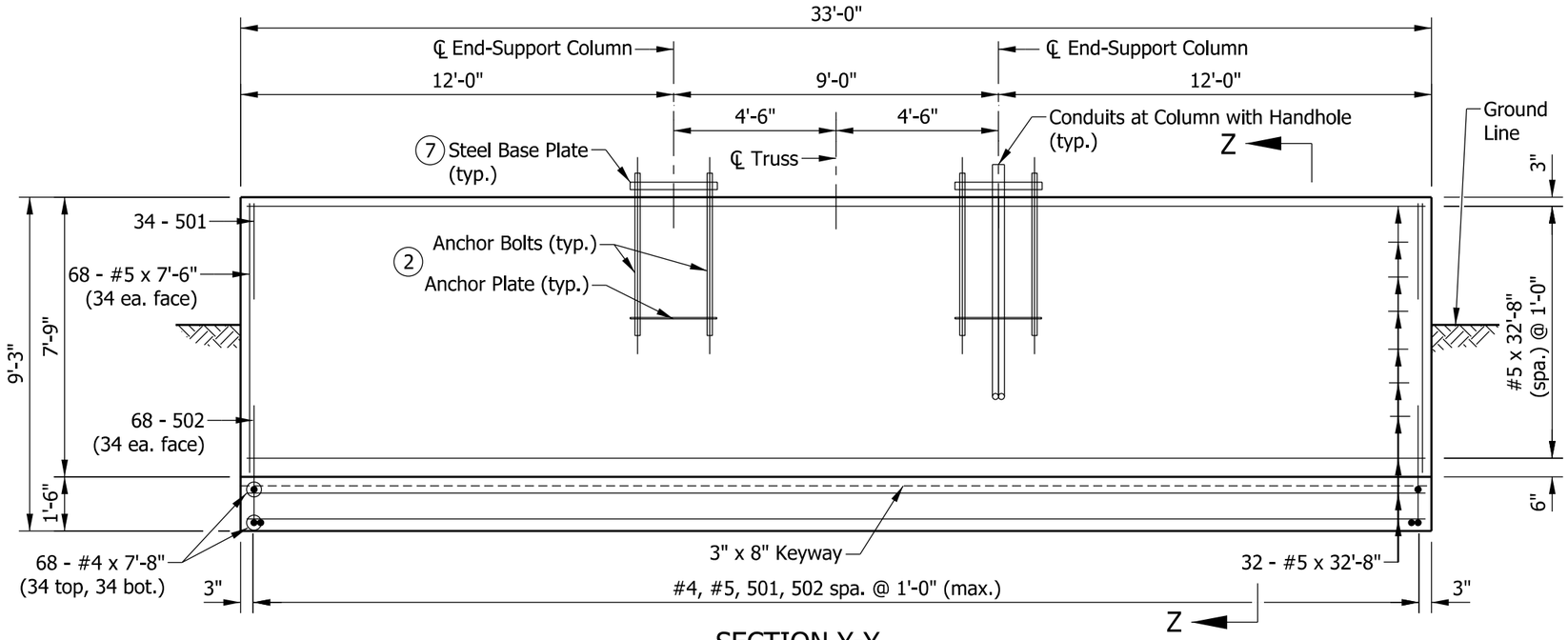

SECTION Y-Y

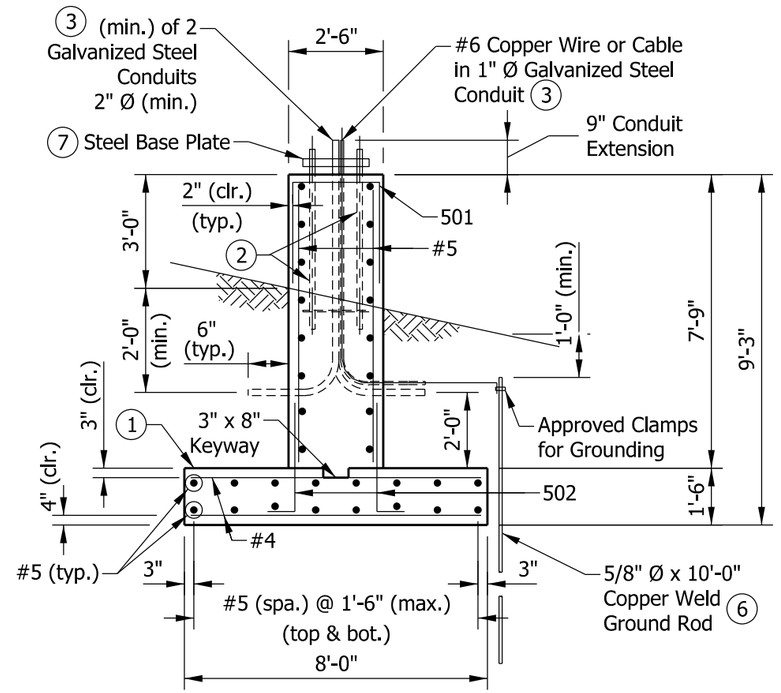

SECTION Z-Z

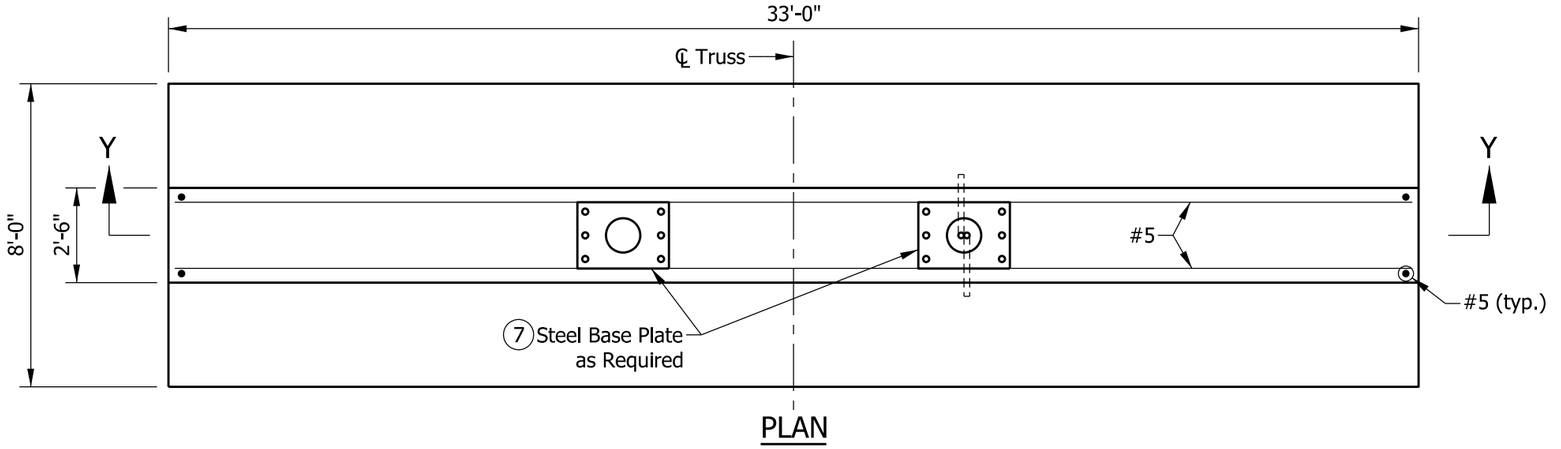

PLAN

NOTES:

1. Top of the footing shall be a minimum of 4 ft - 0 in. below the pavement for ground suface.
2. See Standard Drawing E 802-SBTS-16 for anchor bolt and anchor plate details.
3. Both ends of steel conduit shall be capped.
4. See Standard Drawing E 802-SBTS-29 for quantities.
5. See Standard Drawing E 703-BRST series for reinforcing-bar bending details and notes.
6. Only one ground rod per structure is required.
7. See Standard Drawing E 802-SBTS-13 for base plate details.
8. Minimum concrete strength f'c = 3500 psi.
9. For slopes steeper than 3:1 the Alternate Drilled Shaft Foundation shall be used.

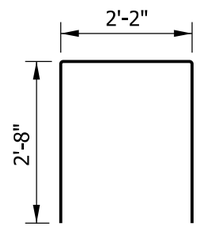

501 x 7'-6"

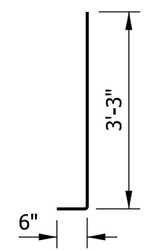

502 x 3'-9"

INDIANA DEPARTMENT OF TRANSPORTATION

SIGN BOX TRUSS STRUCTURE A-E
SPREAD FOUNDATION
FOR MEDIAN OR SHOULDER, 36" HEIGHT
SEPTEMBER 2022

STANDARD DRAWING NO. E 802-SBTS-28

DAVID H. BORUFF REGISTERED No. 60900348 STATE OF INDIANA PROFESSIONAL ENGINEER

David H Boruff 5/17/22
DESIGN STANDARDS ENGINEER DATE

07/07/2022
CHIEF ENGINEER DATE

SPREAD FOUNDATION AT 33" CONCRETE BARRIER WALL			
EPOXY-COATED REINFORCING BARS			
MARK OR SIZE	NO. OF BARS	LENGTH	WEIGHT
501	34	7'-6"	
502	68	3'-9"	
#5	68	6'-6"	
#5	30	32'-8"	
Total #5			2015 LBS
#4	68	7'-8"	
Total #4			348 LBS
Total Epoxy-Coated Reinforcing Bars			2363 LBS
CONCRETE, CLASS A			
Total Concrete, Class A			39.8 CYS
MISCELLANEOUS			
Surface Seal			30.4 SYS

SPREAD FOUNDATION AT 45" CONCRETE BARRIER WALL			
EPOXY-COATED REINFORCING BARS			
MARK OR SIZE	NO. OF BARS	LENGTH	WEIGHT
501	34	7'-6"	
502	68	3'-9"	
#5	68	7'-6"	
#5	32	32'-8"	
Total #5			2154 LBS
#4	68	7'-8"	
Total #4			348 LBS
Total Epoxy-Coated Reinforcing Bars			2502 LBS
CONCRETE, CLASS A			
Total Concrete, Class A			41.4 CYS
MISCELLANEOUS			
Surface Seal			37.8 SYS

SPREAD FOUNDATION FOR MEDIAN OR SHOULDER, 36" HEIGHT			
EPOXY-COATED REINFORCING BARS			
MARK OR SIZE	NO. OF BARS	LENGTH	WEIGHT
501	34	7'-6"	
502	68	3'-9"	
#5	68	7'-6"	
#5	32	32'-8"	
Total #5			2154 LBS
#4	68	7'-8"	
Total #4			348 LBS
Total Epoxy-Coated Reinforcing Bars			2502 LBS
CONCRETE, CLASS A			
Total Concrete, Class A			38.4 CYS
MISCELLANEOUS			
Surface Seal			35.8 SYS

INDIANA DEPARTMENT OF TRANSPORTATION

SIGN BOX TRUSS STRUCTURE A-E
SPREAD FOUNDATIONS
QUANTITIES
SEPTEMBER 2022

STANDARD DRAWING NO. E 802-SBTS-29

DAVID H. BORUFF
REGISTERED
No. 60900348
STATE OF INDIANA
PROFESSIONAL ENGINEER

David H Boruff 5/17/22
DESIGN STANDARDS ENGINEER DATE

07/07/2022
CHIEF ENGINEER DATE

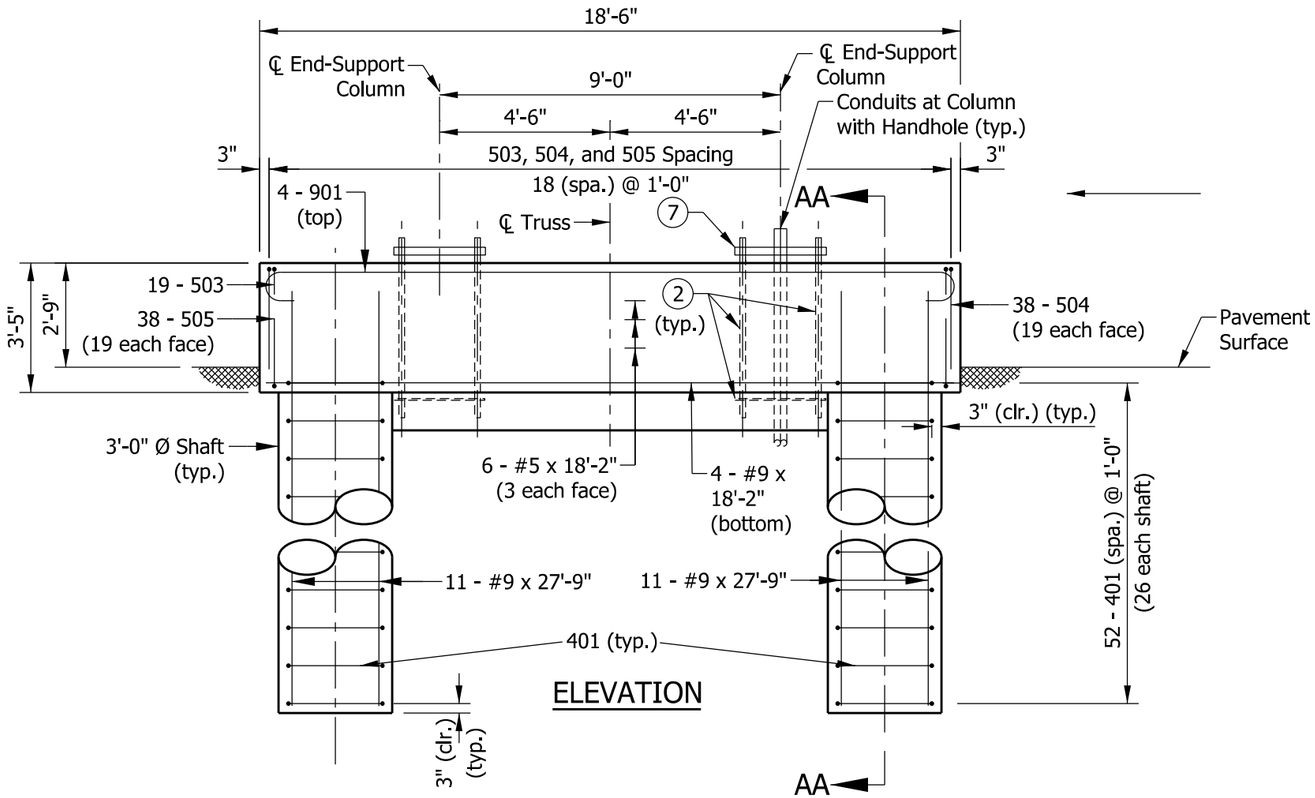

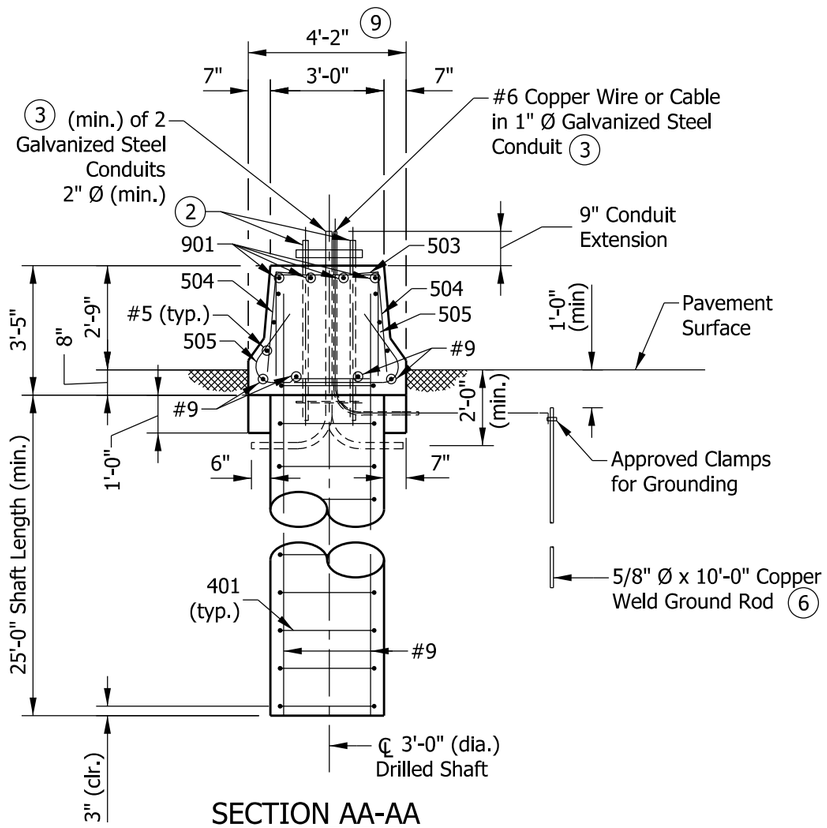

SECTION AA-AA

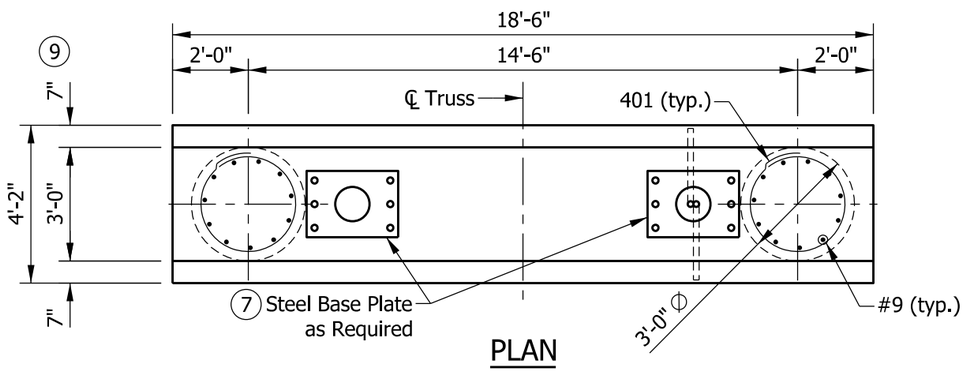

PLAN

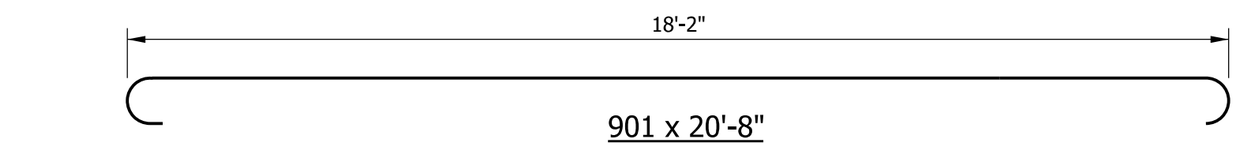

901 x 20'-8"

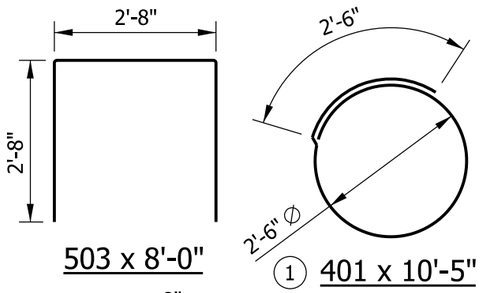

503 x 8'-0"

1 401 x 10'-5"

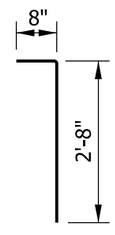

504 x 3'-4"

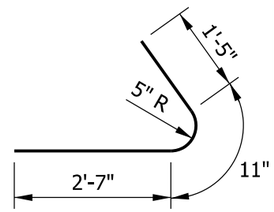

505 x 4'-11"

NOTES:

1. Each tie shall be rotated 90 degrees from the previous tie to stagger lap locations.
2. See Standard Drawing E 802-SBTS-16 for anchor bolt and anchor plate details.
3. Both ends of steel conduit shall be capped.
4. See Standard Drawing E 802-SBTS-33 for quantities.
5. See Standard Drawing E 703-BRST series for reinforcing-bar bending details and notes.
6. Only one ground rod per structure is required.
7. See Standard Drawing E 802-SBTS-13 for base plate details.
8. Minimum concrete strength f'c = 3500 psi.
9. See Standard Drawing E 602-CCMB series for barrier wall width transition.

INDIANA DEPARTMENT OF TRANSPORTATION

SIGN BOX TRUSS STRUCTURE A-E
ALTERNATE DRILLED SHAFT FOUNDATION
AT 33" CONCRETE BARRIER WALL
SEPTEMBER 2022

STANDARD DRAWING NO. E 802-SBTS-30

DAVID H. BORUFF REGISTERED No. 60900348 STATE OF INDIANA PROFESSIONAL ENGINEER

David H Boruff 5/17/22
DESIGN STANDARDS ENGINEER DATE

07/07/2022
CHIEF ENGINEER DATE

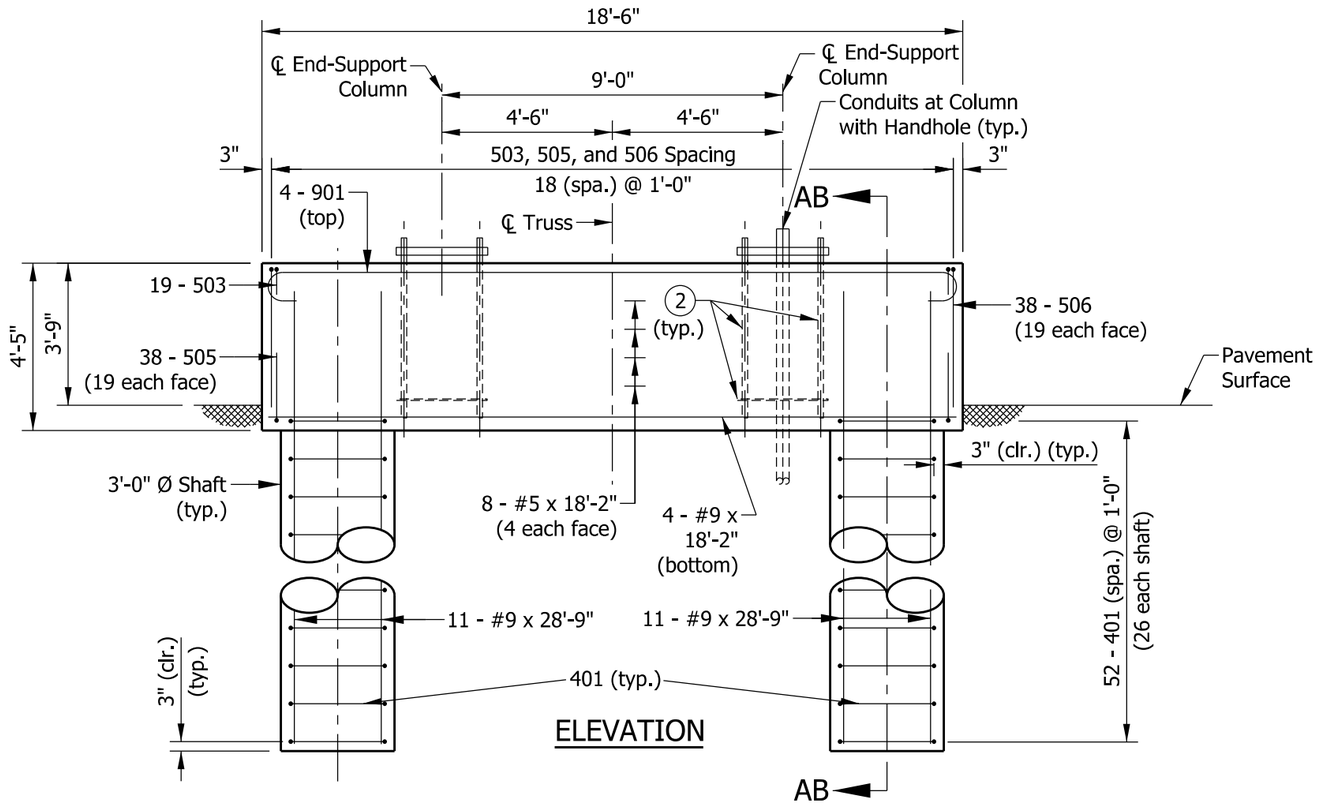

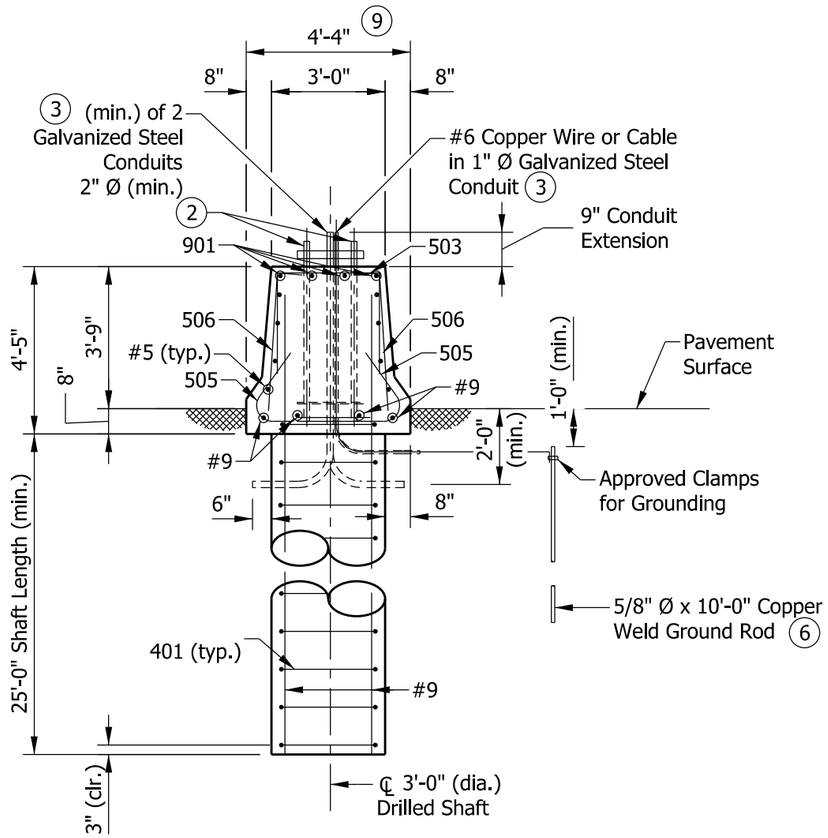

SECTION AB-AB

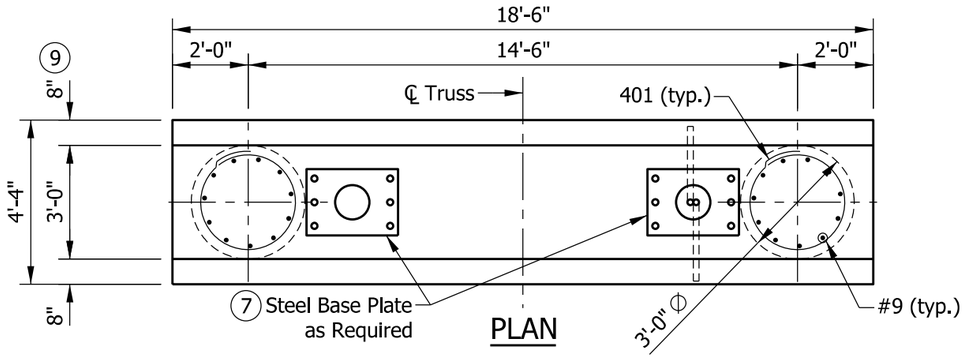

PLAN

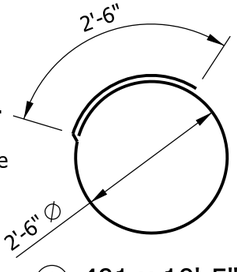

1 401 x 10'-5"

18'-2"

901 x 20'-8"

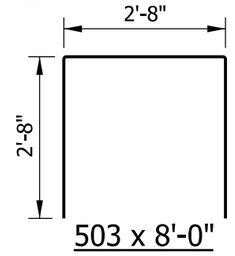

503 x 8'-0"

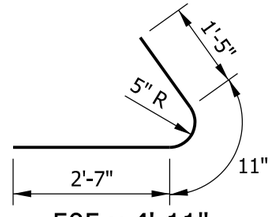

505 x 4'-11"

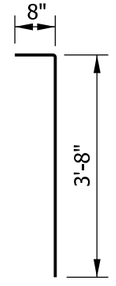

506 x 4'-4"

NOTES:

1. Each tie shall be rotated 90 degrees from the previous tie to stagger lap locations.
2. See Standard Drawing E 802-SBTS-16 for anchor bolt and anchor plate details.
3. Both ends of steel conduit shall be capped.
4. See Standard Drawing E 802-SBTS-33 for quantities.
5. See Standard Drawing E 703-BRST series for reinforcing-bar bending details and notes.
6. Only one ground rod per structure is required.
7. See Standard Drawing E 802-SBTS-13 for base plate details.
8. Minimum concrete strength f'c = 3500 psi.
9. See Standard Drawing E 602-CCMB series for barrier wall width transition.

INDIANA DEPARTMENT OF TRANSPORTATION

SIGN BOX TRUSS STRUCTURE A-E
ALTERNATE DRILLED SHAFT FOUNDATION
AT 45" CONCRETE BARRIER WALL
SEPTEMBER 2022

STANDARD DRAWING NO. E 802-SBTS-31

DAVID H. BORUFF REGISTERED No. 60900348 STATE OF INDIANA PROFESSIONAL ENGINEER

DESIGN STANDARDS ENGINEER — DATE 5/17/22

CHIEF ENGINEER — DATE 07/07/2022

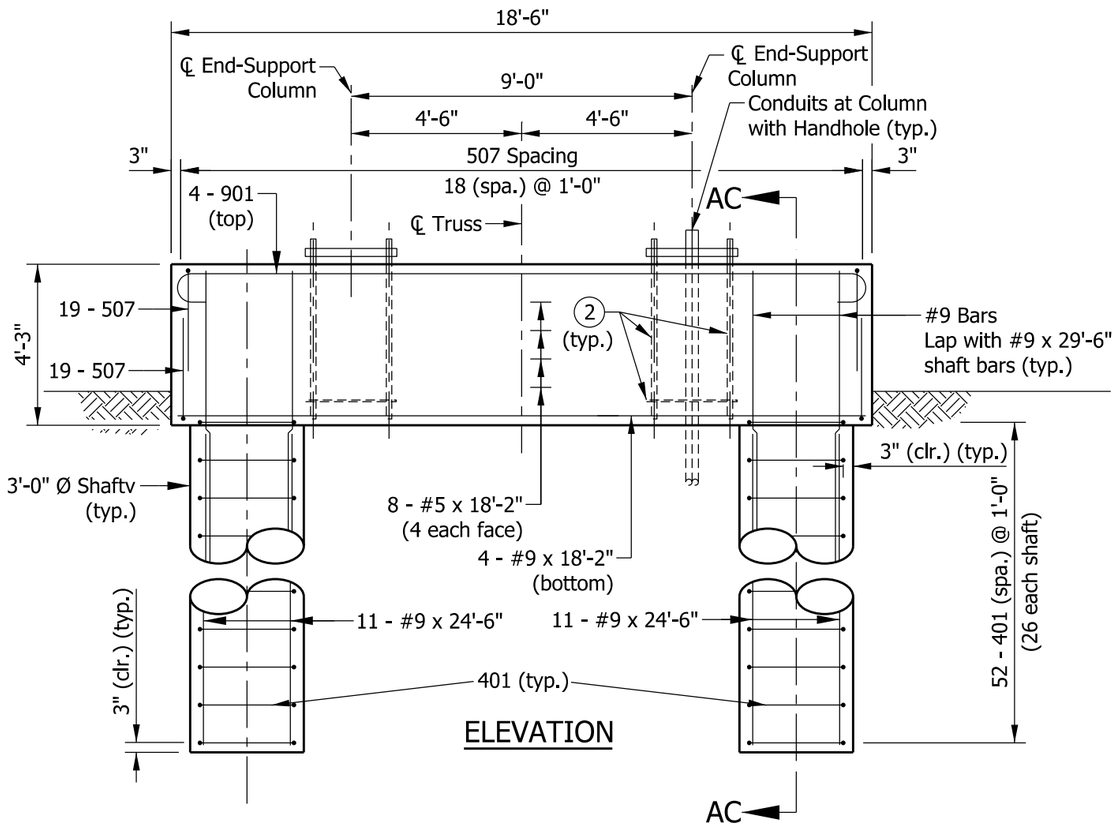

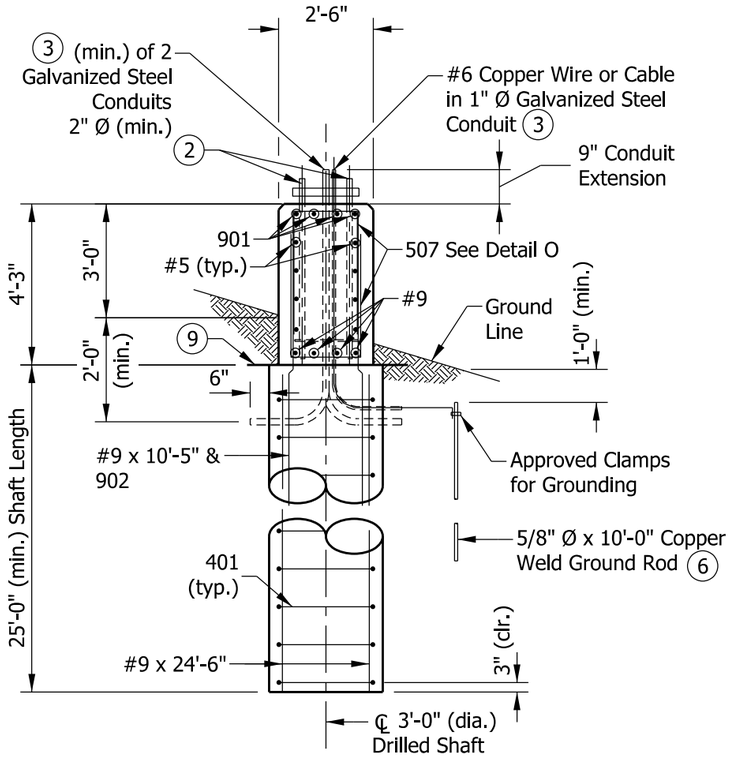

SECTION AC-AC

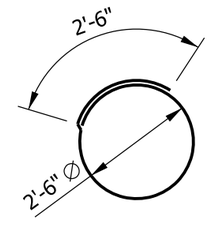

1 401 x 10'-5"

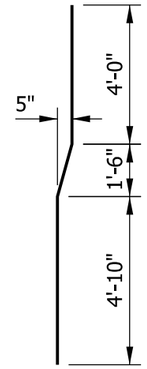

902 x 10'-5"

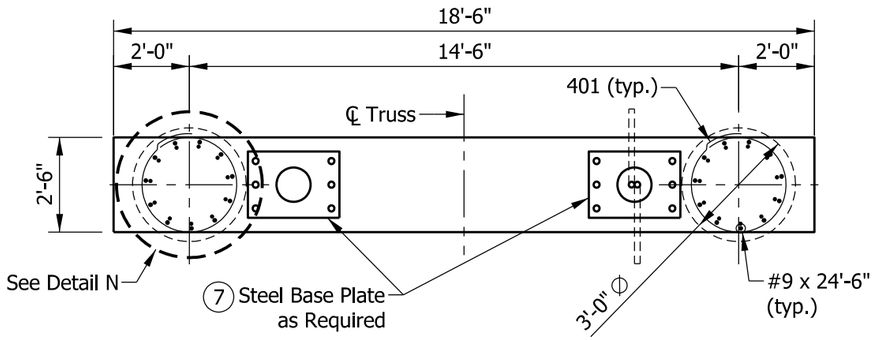

PLAN

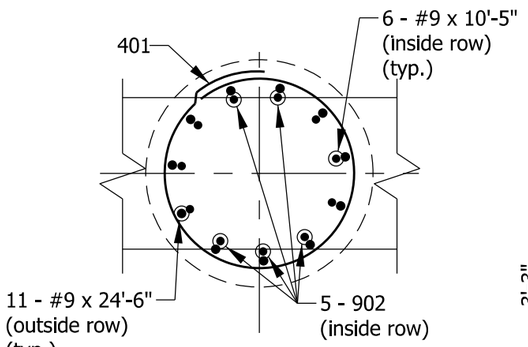

DETAIL N

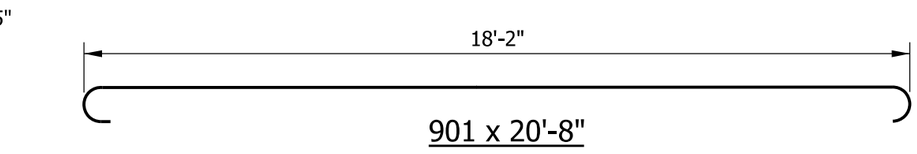

901 x 20'-8"

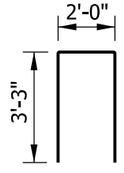

507 x 8'-6"

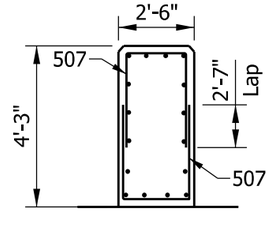

DETAIL O

NOTES:

1. Each tie shall be rotated 90 degrees from previous tie to stagger lap locations.
2. See Standard Drawing E 802-SBTS-16 for anchor bolt and anchor plate details.
3. Both ends of steel conduit shall be capped.
4. See Standard Drawing E 802-SBTS-33 for quantities.
5. See Standard Drawing E 703-BRST series for reinforcing-bar bending details and notes.
6. Only one ground rod per structure is required.
7. See Standard Drawing E 802-SBTS-13 for base plate details.
8. Minimum concrete strength f'c= 3500 psi.
9. Top of foundation shall be level.
10. For slopes steeper than 3:1 the Alternate Drilled Shaft Foundation shall be used.

INDIANA DEPARTMENT OF TRANSPORTATION

SIGN BOX TRUSS STRUCTURE A-E
ALTERNATE DRILLED SHAFT FOUNDATION
FOR MEDIAN OR SHOULDER, 36" HEIGHT
SEPTEMBER 2022

STANDARD DRAWING NO. E 802-SBTS-32

DAVID H. BORUFF REGISTERED No. 60900348 STATE OF INDIANA PROFESSIONAL ENGINEER

David H Boruff 5/17/22
DESIGN STANDARDS ENGINEER DATE

07/07/2022
CHIEF ENGINEER DATE

ALTERNATE DRILLED SHAFT FOUNDATION AT 33" CONCRETE BARRIER WALL			
EPOXY-COATED REINFORCING BARS			
MARK OR SIZE	NO. OF BARS	LENGTH	WEIGHT
901	4	20'-8"	
#9	4	18'-2"	
#9	22	27'-9"	
Total #9			2604 LBS
503	19	8'-0"	
504	38	3'-4"	
505	38	4'-11"	
#5	6	18'-2"	
Total #5			599 LBS
401	52	10'-5"	
Total #4			362 LBS
Total Epoxy-Coated Reinforcing Bars			3565
CONCRETE, CLASS A			
Total Concrete, Class A			23.1 CYS
MISCELLANEOUS			
Surface Seal			18.1 SYS

ALTERNATE DRILLED SHAFT FOUNDATION AT 45" CONCRETE BARRIER WALL			
EPOXY-COATED REINFORCING BARS			
MARK OR SIZE	NO. OF BARS	LENGTH	WEIGHT
901	4	20'-8"	
#9	4	18'-2"	
#9	22	28'-9"	
Total #9			2679 LBS
503	19	8'-0"	
505	38	4'-11"	
506	38	4'-4"	
#5	8	18'-2"	
Total #5			677 LBS
401	52	10'-5"	
Total #4			362 LBS
Total Epoxy-Coated Reinforcing Bars			3718 LBS
CONCRETE, CLASS A			
Total Concrete, Class A			23.9 CYS
MISCELLANEOUS			
Surface Seal			22.2 SYS

ALTERNATE DRILLED SHAFT FOUNDATION FOR MEDIAN OR SHOULDER, 36" HEIGHT			
EPOXY-COATED REINFORCING BARS			
MARK OR SIZE	NO. OF BARS	LENGTH	WEIGHT
901	4	20'-8"	
902	10	10'-5"	
#9	4	18'-2"	
#9	12	10'-5"	
#9	22	24'-6"	
Total #9			3140 LBS
507	38	8'-6"	
#5	8	18'-2"	
Total #5			488 LBS
401	52	10'-5"	
Total #4			362 LBS
Total Epoxy-Coated Reinforcing Bars			3990 LBS
CONCRETE, CLASS A			
Total Concrete, Class A			18.9 CYS
MISCELLANEOUS			
Surface Seal			21.6 SYS

Quantities are only for the depth of footing for slope 3:1 or less.

INDIANA DEPARTMENT OF TRANSPORTATION

SIGN BOX TRUSS STRUCTURE TYPE A-E ALTERNATE DRILLED SHAFT FOUNDATIONS QUANTITIES SEPTEMBER 2022

STANDARD DRAWING NO. E 802-SBTS-33

DAVID H. BORUFF REGISTERED No. 60900348 STATE OF INDIANA PROFESSIONAL ENGINEER

David H Boruff 5/17/22
DESIGN STANDARDS ENGINEER DATE

07/07/2022
CHIEF ENGINEER DATE

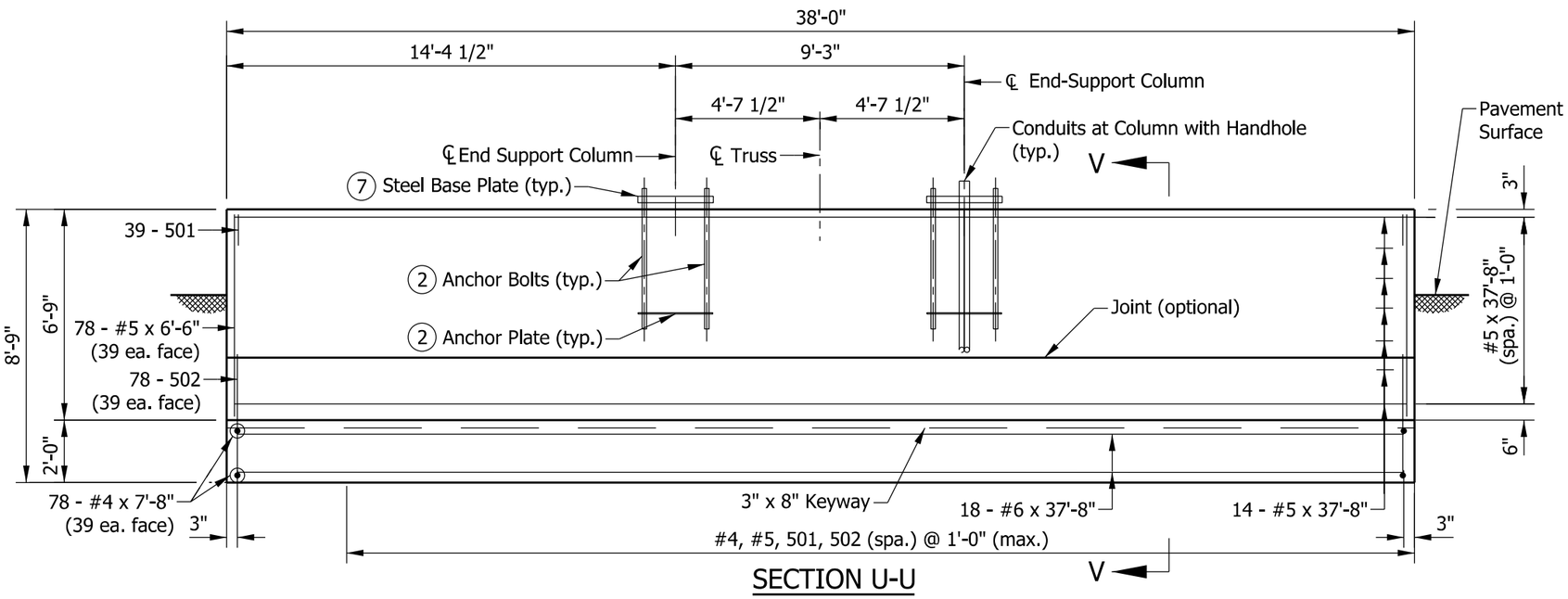

SECTION U-U

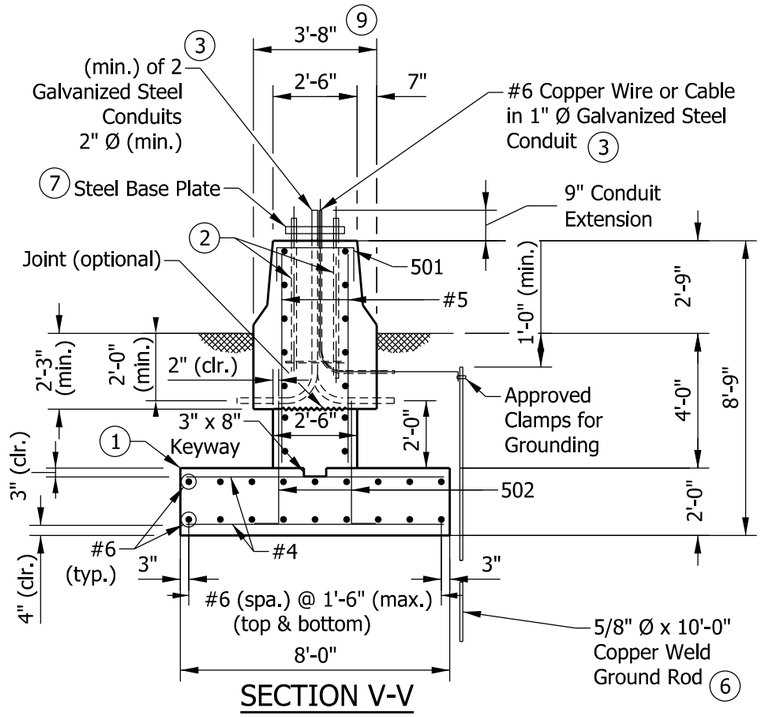

SECTION V-V

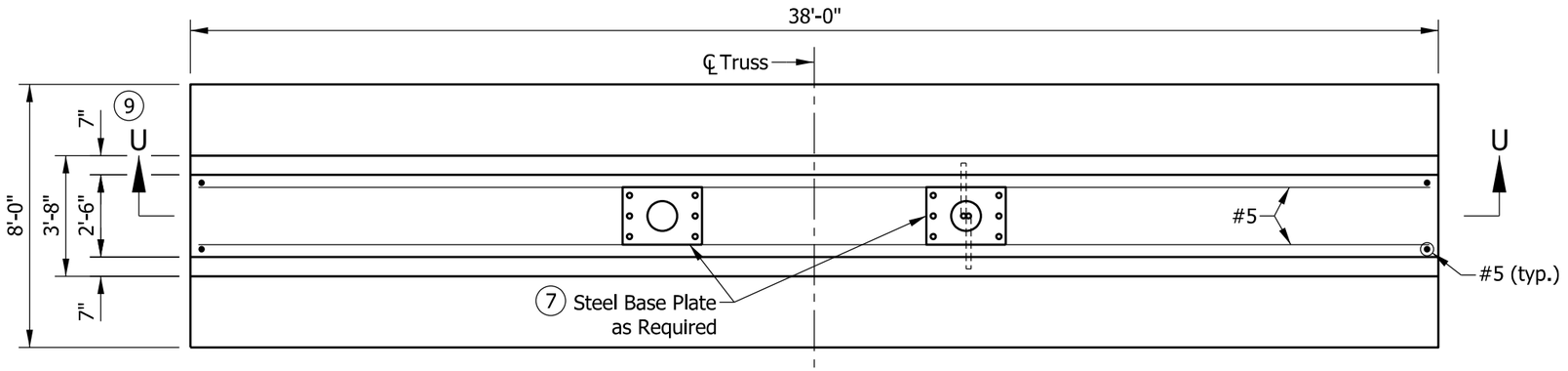

PLAN

NOTES:

1. Top of the footing shall be a minimum of 4 ft - 0 in. below the pavement of ground surface.
2. See Standard Drawing E 802-SBTS-16 for anchor bolt and anchor plate details.
3. Both ends of steel conduit shall be capped.
4. See Standard Drawing E 802-SBTS-37 for quantities.
5. See Standard Drawing Series E 703-BRST series for reinforcing-bar bending details and notes.
6. Only one ground rod per structure is required.
7. See Standard Drawing E 802-SBTS-13 for base plate details.
8. Minimum concrete strength fc=3500 psi.
9. See Standard Drawing E 602-CCMB series for barrier wall width transition.

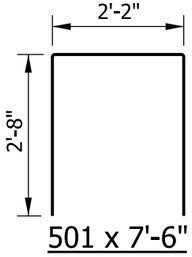

501 x 7'-6"

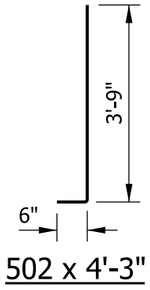

502 x 4'-3"

INDIANA DEPARTMENT OF TRANSPORTATION

SIGN BOX TRUSS STRUCTURE TYPE F, G, H
SPREAD FOUNDATION
AT 33" CONCRETE BARRIER WALL
SEPTEMBER 2022

STANDARD DRAWING NO. E 802-SBTS-34

DAVID H. BORUFF REGISTERED No. 60900348 STATE OF INDIANA PROFESSIONAL ENGINEER

David H Boruff 5/17/22
DESIGN STANDARDS ENGINEER DATE

07/07/2022
CHIEF ENGINEER DATE

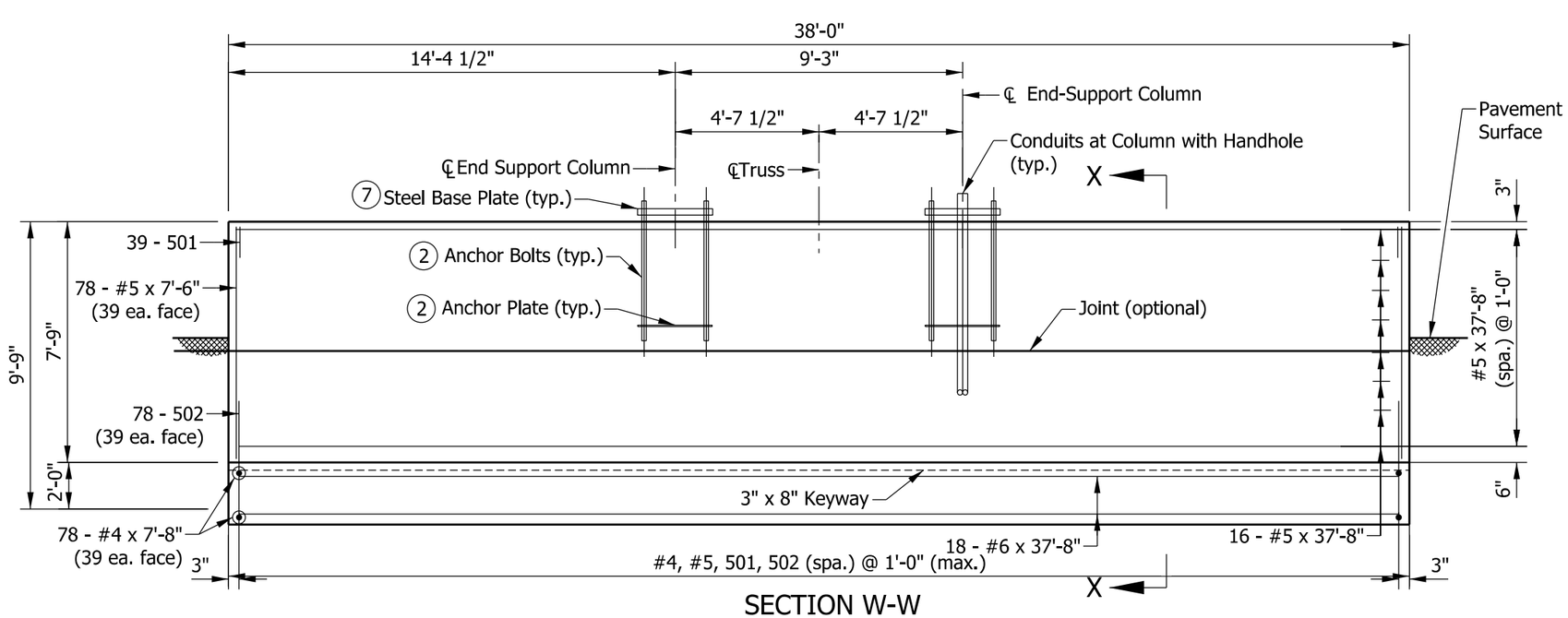

SECTION W-W

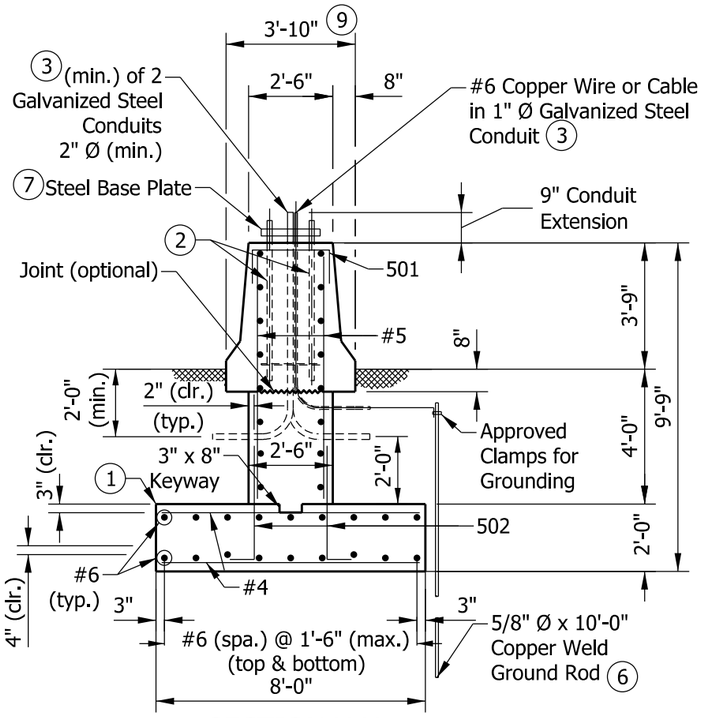

SECTION X-X

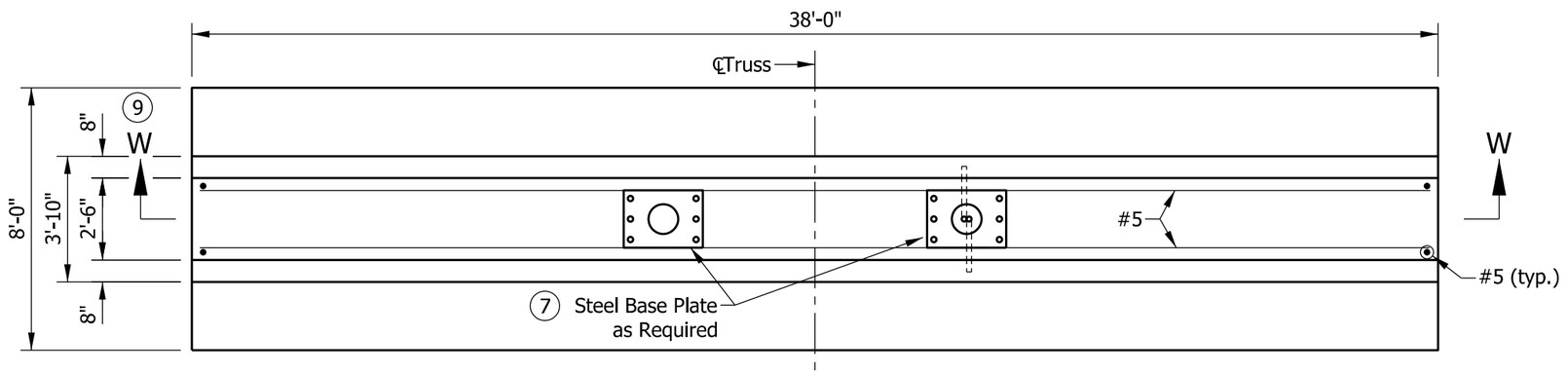

PLAN

NOTES:

1. Top of the footing shall be a minimum of 4 ft - 0 in. below the pavement or ground surface.
2. See Standard Drawing E 802-SBTS-16 for anchor bolt and anchor plate details.
3. Both ends of steel conduit shall be capped.
4. See Standard Drawing E 802-SBTS-37 for quantities.
5. See Standard Drawing E 703-BRST series for reinforcing-bar bending details and notes.
6. Only one ground rod per structure is required.
7. See Standard Drawing E 802-SBTS-13 for base plate details.
8. Minimum concrete strength fc=3500 psi.
9. See Standard Drawing E 602-CCMB series for barrier wall width transition.

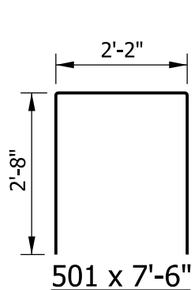

501 x 7'-6"

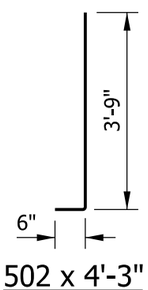

502 x 4'-3"

INDIANA DEPARTMENT OF TRANSPORTATION

SIGN BOX TRUSS STRUCTURE TYPE F, G, H
SPREAD FOUNDATION
AT 45" CONCRETE BARRIER WALL
SEPTEMBER 2022

STANDARD DRAWING NO. E 802-SBTS-35

DAVID H. BORUFF REGISTERED No. 60900348 STATE OF INDIANA PROFESSIONAL ENGINEER

David H Boruff 5/17/22
DESIGN STANDARDS ENGINEER DATE

07/07/2022
CHIEF ENGINEER DATE

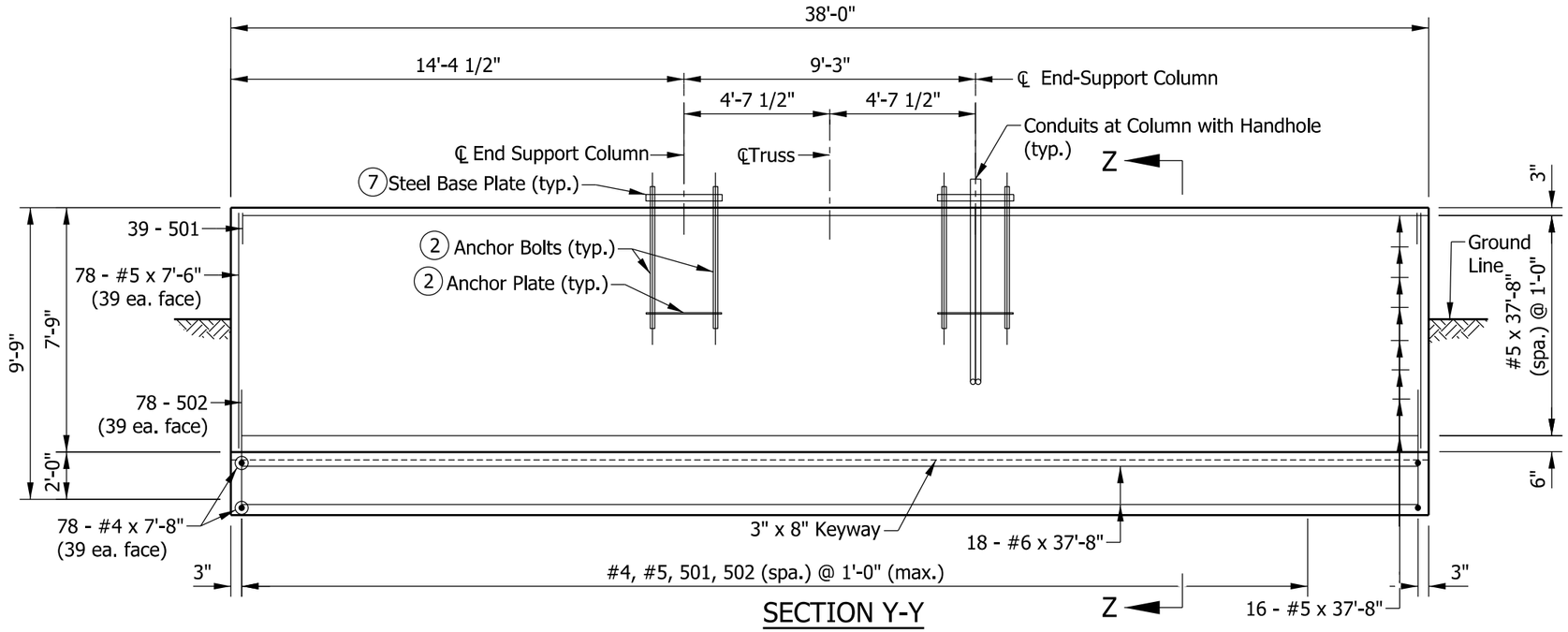

SECTION Y-Y

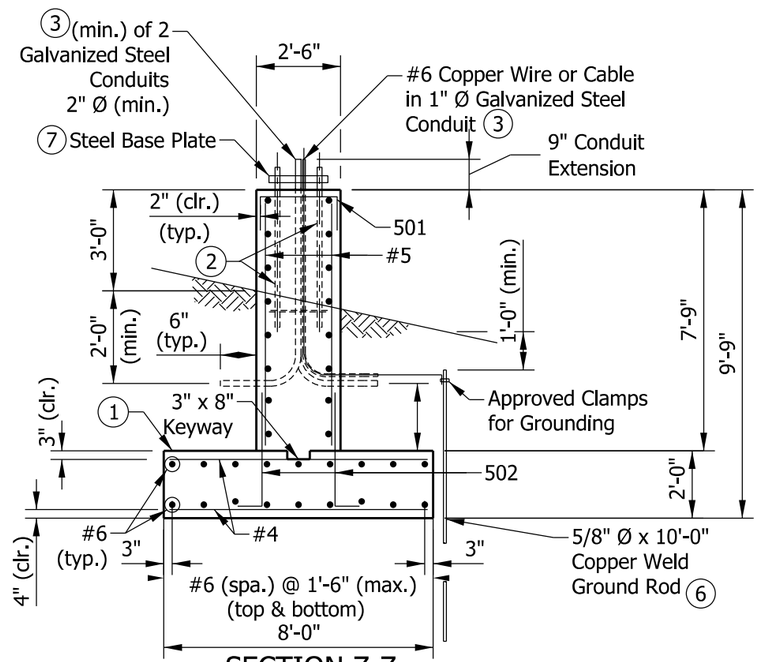

SECTION Z-Z

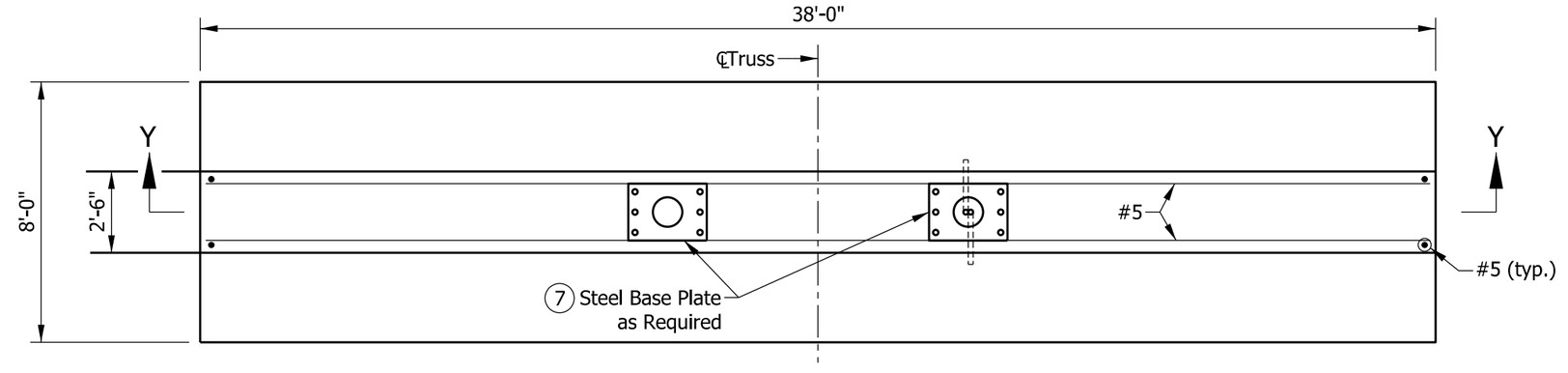

PLAN

NOTES:

1. Top of the footing shall be a minimum of 4 ft - 0 in. below the pavement or ground surface.
2. See Standard Drawing E 802-SBTS-16 for anchor bolt and anchor plate details.
3. Both ends of steel conduit shall be capped.
4. See Standard Drawing E 802-SBTS-37 for quantities.
5. See Standard Drawing E 703-BRST series for reinforcing-bar bending details and notes.
6. Only one ground rod per structure is required.
7. See Standard Drawing E 802-SBTS-13 for base plate details.
8. Minimum concrete strength f'c = 3500 psi.
9. For slopes steeper than 3:1 the Alternate Drilled Shaft Foundation shall be used.

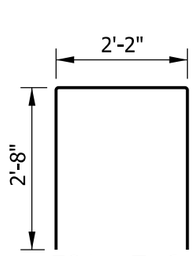

501 x 7'-6"

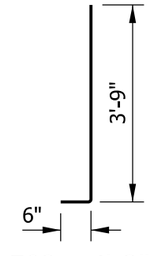

502 x 4'-3"

INDIANA DEPARTMENT OF TRANSPORTATION

SIGN BOX TRUSS STRUCTURE TYPE F, G, H
SPREAD FOUNDATION
FOR MEDIAN OR SHOULDER, 36" HEIGHT
SEPTEMBER 2022

STANDARD DRAWING NO. E 802-SBTS-36

DAVID H. BORUFF REGISTERED No. 60900348 STATE OF INDIANA PROFESSIONAL ENGINEER

David H Boruff 5/17/22
DESIGN STANDARDS ENGINEER DATE

07/07/2022
CHIEF ENGINEER DATE

SPREAD FOUNDATION AT 33" CONCRETE BARRIER WALL			
EPOXY-COATED REINFORCING BARS			
MARK OR SIZE	NO. OF BARS	LENGTH	WEIGHT
#6	18	37'-8"	
Total #6			1018 LBS
501	39	7'-6"	
502	78	4'-3"	
#5	78	6'-6"	
#5	14	37'-8"	
Total #5			1730 LBS
#4	78	7'-8"	
Total #4			399 LBS
Total Epoxy-Coated Reinforcing Bars			3147 LBS
CONCRETE, CLASS A			
Total Concrete, Class A			51.4 CYS
MISCELLANEOUS			
Surface Seal			35.0 SYS

SPREAD FOUNDATION AT 45" CONCRETE BARRIER WALL			
EPOXY-COATED REINFORCING BARS			
MARK OR SIZE	NO. OF BARS	LENGTH	WEIGHT
#6	18	37'-8"	
Total #6			1018 LBS
501	39	7'-6"	
502	78	4'-3"	
#5	78	7'-6"	
#5	16	37'-8"	
Total #5			1890 LBS
#4	78	7'-8"	
Total #4			399 LBS
Total Epoxy-Coated Reinforcing Bars			3307 LBS
CONCRETE, CLASS A			
Total Concrete, Class A			53.3 CYS
MISCELLANEOUS			
Surface Seal			43.4 SYS

SPREAD FOUNDATION FOR MEDIAN OR SHOULDER, 36" HEIGHT			
EPOXY-COATED REINFORCING BARS			
MARK OR SIZE	NO. OF BARS	LENGTH	WEIGHT
#6	18	37'-8"	
Total #6			1018 LBS
501	39	7'-6"	
502	78	4'-3"	
#5	78	7'-6"	
#5	16	37'-8"	
Total #5			1890 LBS
#4	78	7'-8"	
Total #4			399 LBS
Total Epoxy-Coated Reinforcing Bars			3307 LBS
CONCRETE, CLASS A			
Total Concrete, Class A			49.8 CYS
MISCELLANEOUS			
Surface Seal			41.2 SYS

INDIANA DEPARTMENT OF TRANSPORTATION

SIGN BOX TRUSS STRUCTURE TYPE F, G, H
SPREAD FOUNDATIONS
QUANTITIES
SEPTEMBER 2022

STANDARD DRAWING NO. E 802-SBTS-37

DAVID H. BORUFF
REGISTERED
No. 60900348
STATE OF INDIANA
PROFESSIONAL ENGINEER

David H Boruff 5/17/22
DESIGN STANDARDS ENGINEER DATE

07/07/2022
CHIEF ENGINEER DATE

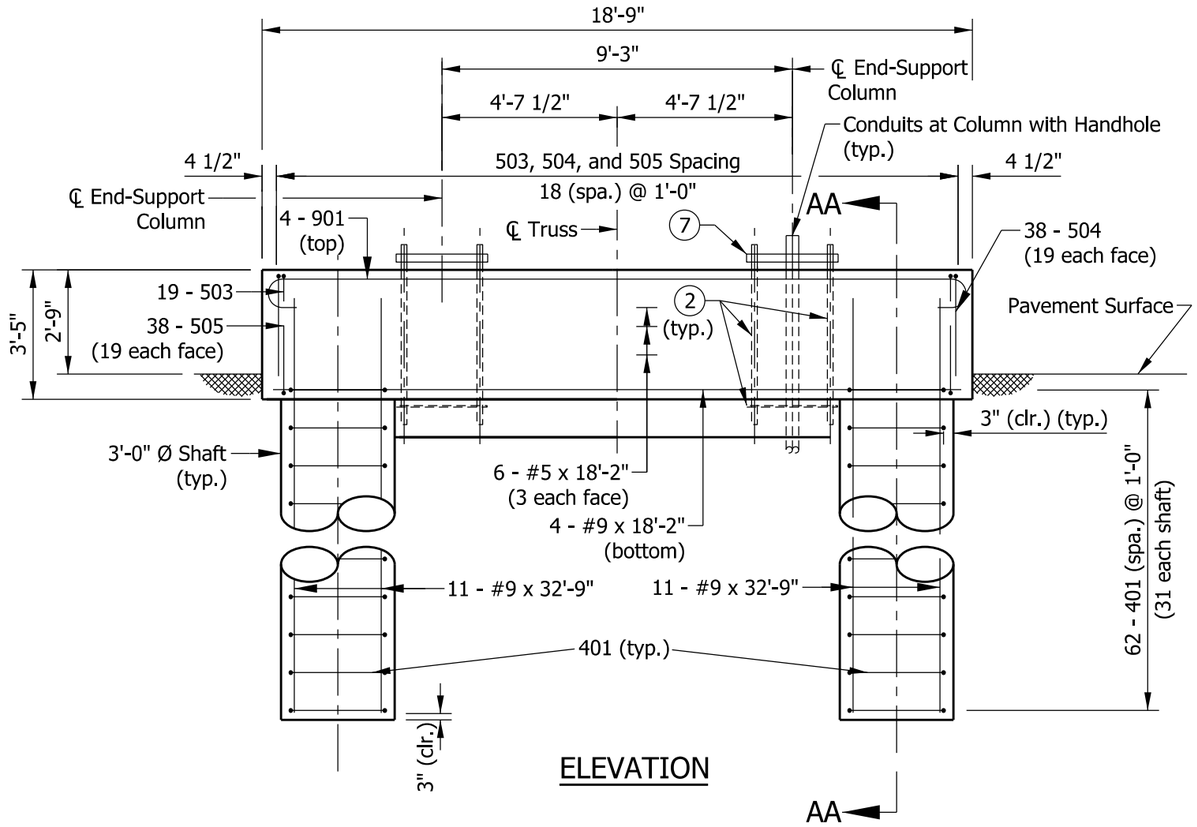

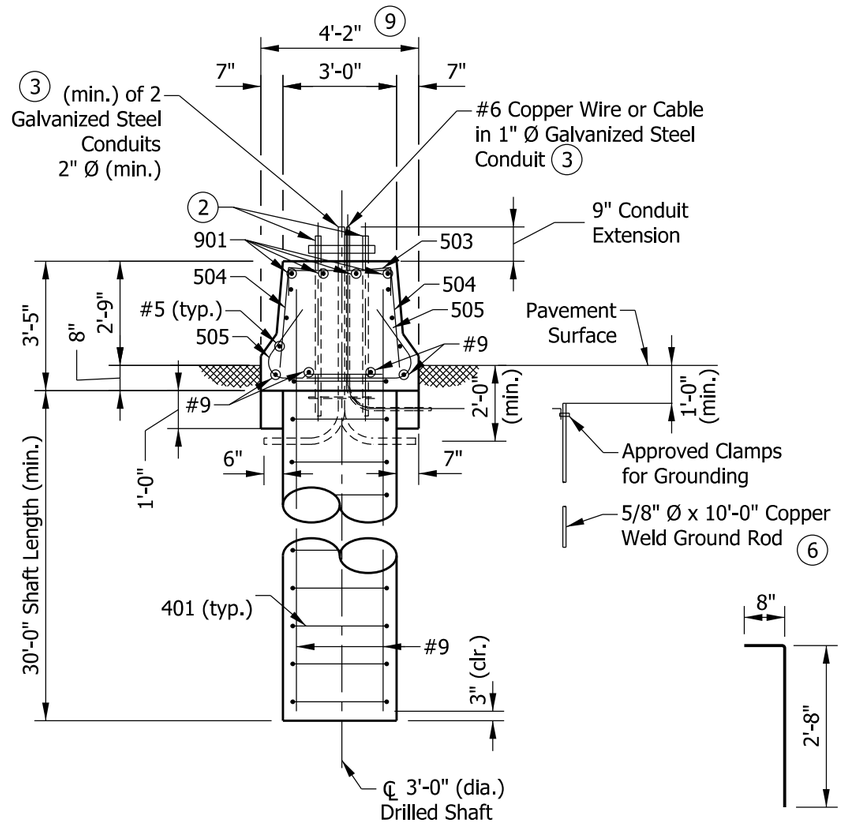

SECTION AA-AA

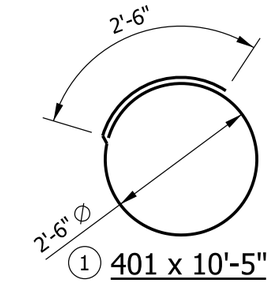

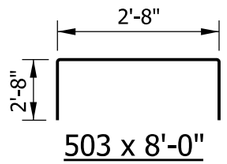

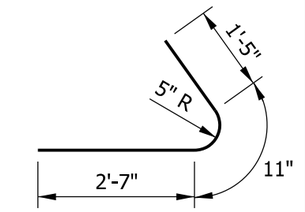

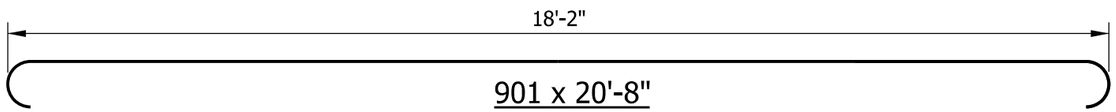

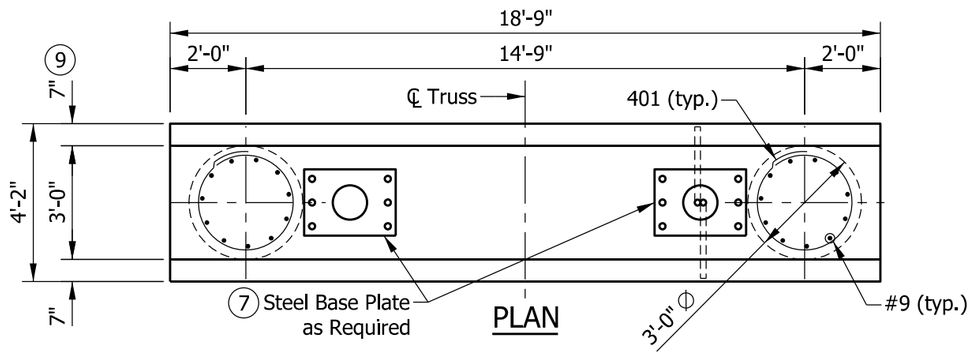

NOTES:

1. Each tie shall be rotated 90 degrees from the previous tie to stagger lap locations.
2. See Standard Drawing E 802-SBTS-16 for anchor bolt and anchor plate details.
3. Both ends of steel conduit shall be capped.
4. See Standard Drawing E 802-SBTS-41 for quantities.
5. See Standard Drawing E 703-BRST series for reinforcing-bar bending details and notes.
6. Only one ground rod per structure is required.
7. See Standard Drawing E 602-CCMB series for barrier wall width transition.
8. Minimum concrete strength f'c = 3500.
9. See Standard Drawing E 602-CCMB series for barrier wall width transition.

INDIANA DEPARTMENT OF TRANSPORTATION

SIGN BOX TRUSS STRUCTURE TYPE F, G, H ALTERNATE DRILLED SHAFT FOUNDATION AT 33" CONCRETE BARRIER WALL SEPTEMBER 2022

STANDARD DRAWING NO. E 802-SBTS-38

DAVID H. BORUFF REGISTERED No. 60900348 STATE OF INDIANA PROFESSIONAL ENGINEER

David H Boruff 5/17/22

DESIGN STANDARDS ENGINEER DATE

07/07/2022

CHIEF ENGINEER DATE

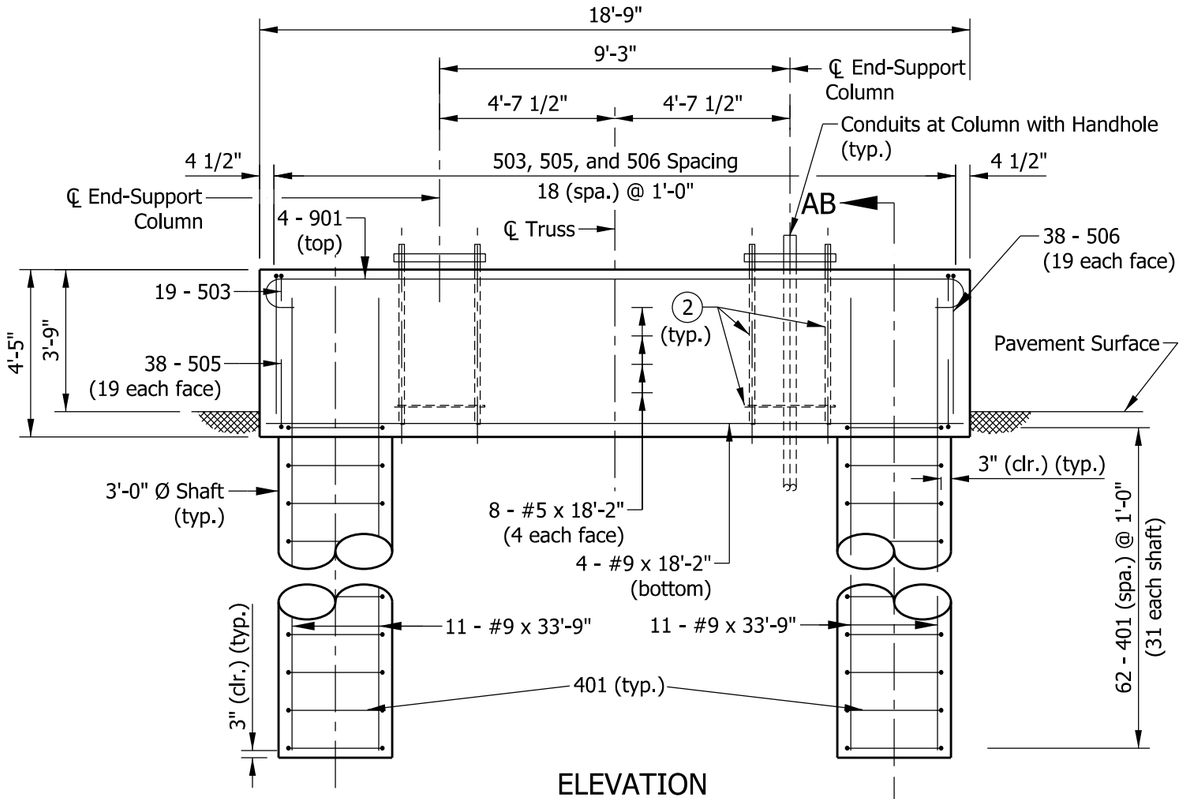

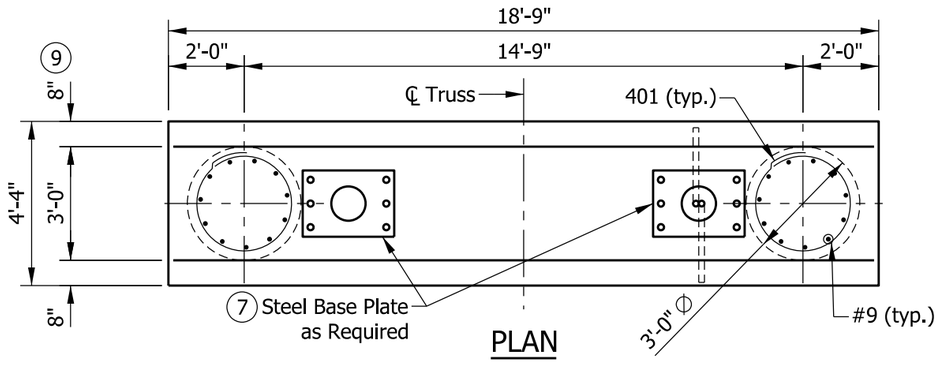

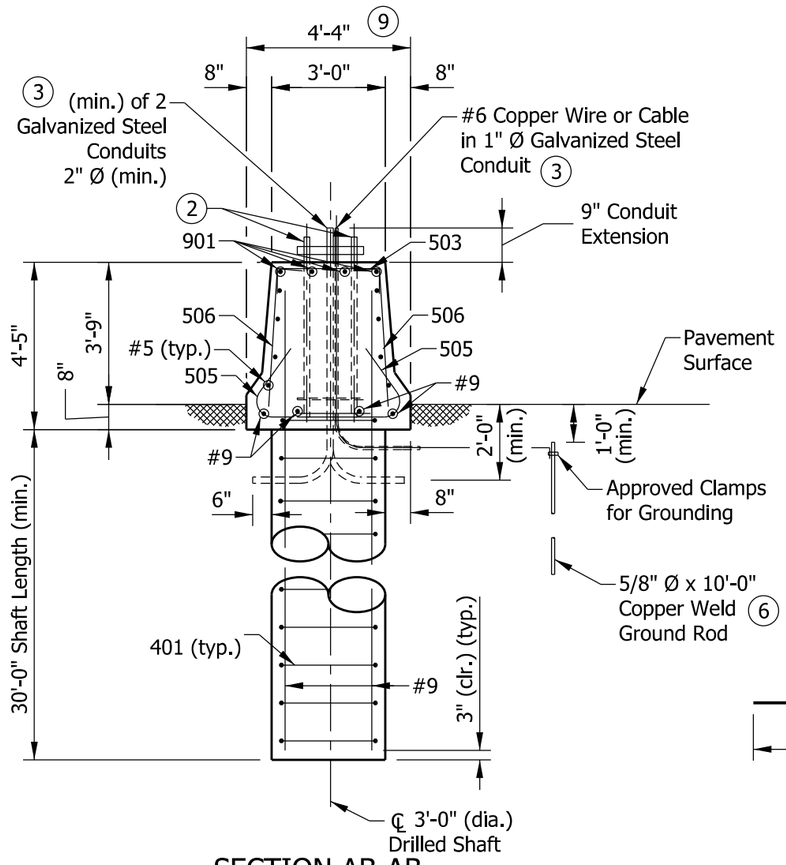

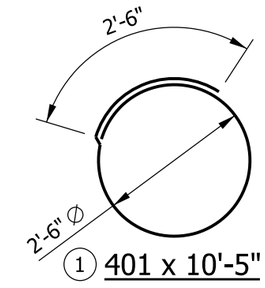

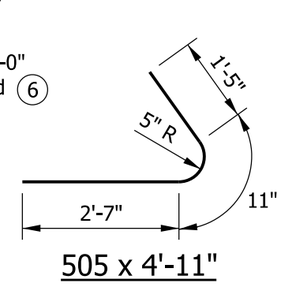

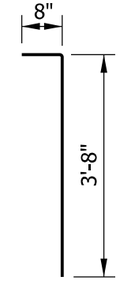

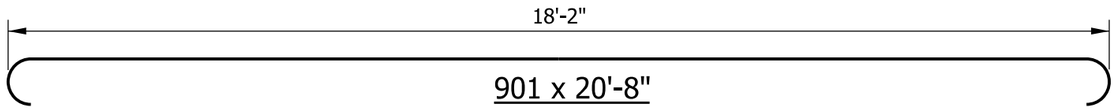

NOTES:

1. Each tie shall be rotated 90 degrees from the previous tie to stagger lap locations.
2. See Standard Drawing E 802-SBTS-16 for anchor bolt and anchor plate details.
3. Both ends of steel conduit shall be capped.
4. See Standard Drawing E 802-SBTS-41 for quantities.
5. See Standard Drawing E 703-BRST series for reinforcing-bar bending details and notes.
6. Only one ground rod per structure is required.
7. See Standard Drawing E 802-SBTS-13 for base plate details.
8. Minimum concrete strength f'c = 3500.
9. See Standard Drawing E 602-CCMB series for barrier wall width transition.

INDIANA DEPARTMENT OF TRANSPORTATION

SIGN BOX TRUSS STRUCTURE TYPE F, G, H ALTERNATE DRILLED SHAFT FOUNDATION AT 45" CONCRETE BARRIER WALL SEPTEMBER 2022

STANDARD DRAWING NO. E 802-SBTS-39

DAVID H. BORUFF REGISTERED No. 60900348 STATE OF INDIANA PROFESSIONAL ENGINEER

David H Boruff 5/17/22
DESIGN STANDARDS ENGINEER DATE

07/07/2022
CHIEF ENGINEER DATE

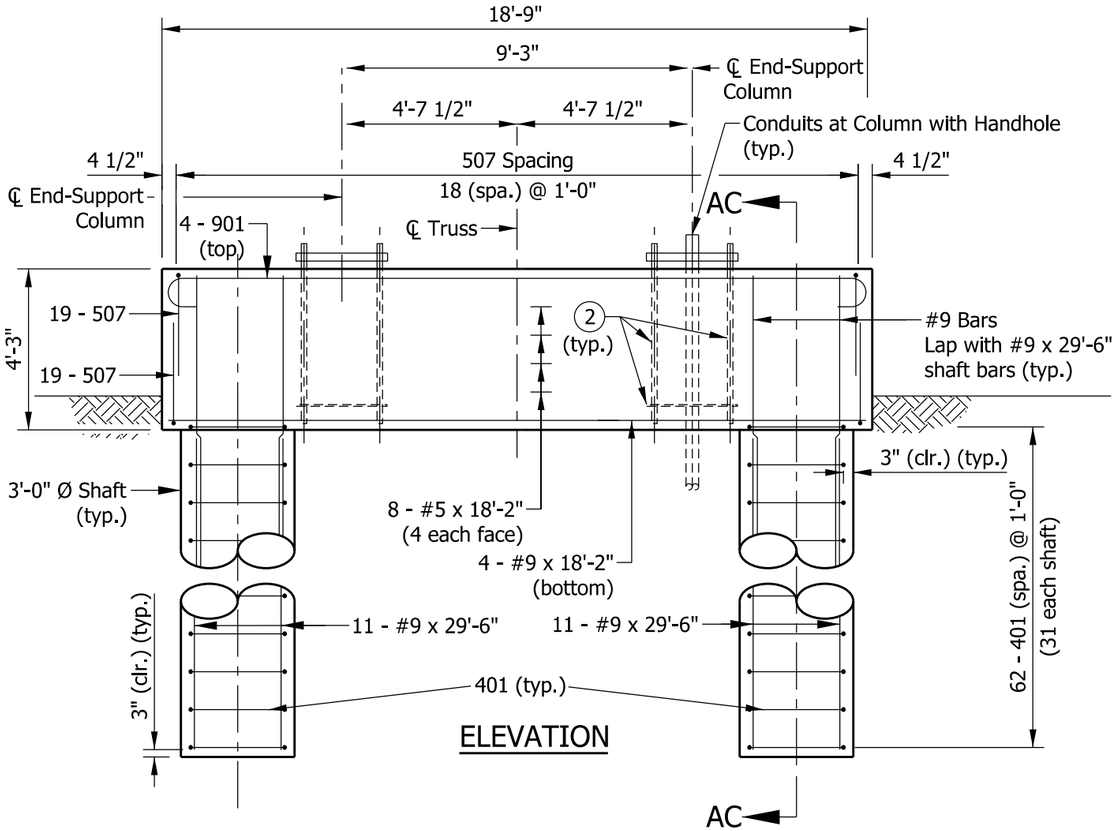

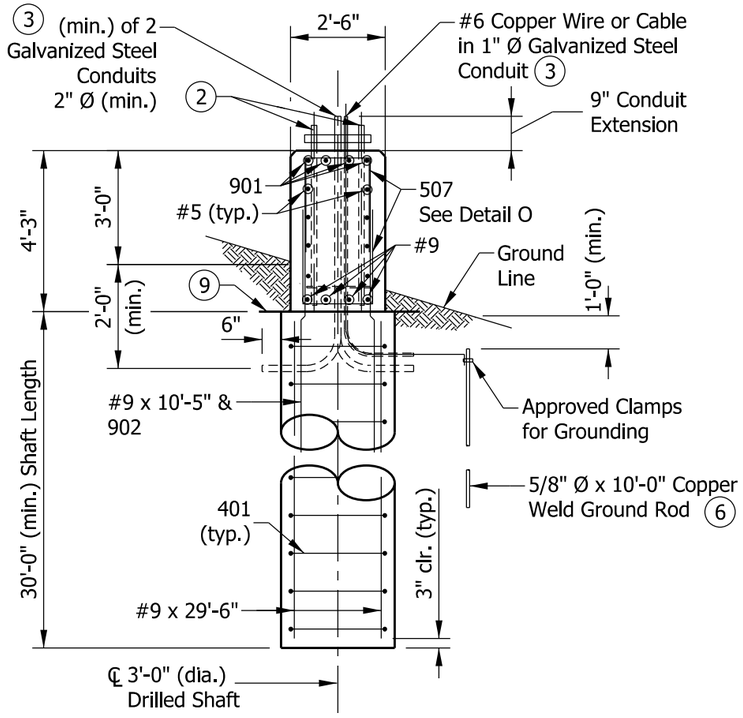

SECTION AC-AC

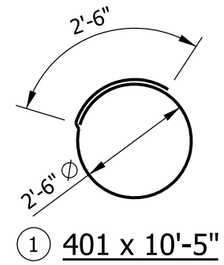

1 401 x 10'-5"

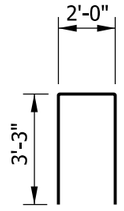

507 x 8'-6"

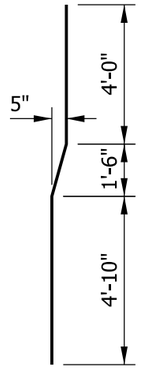

902 x 10'-5"

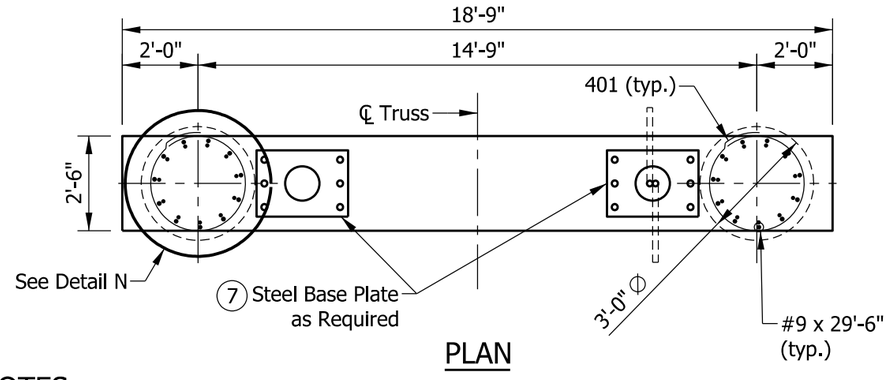

PLAN

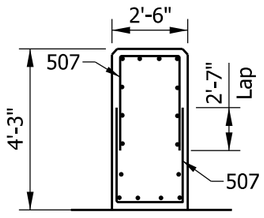

DETAIL O

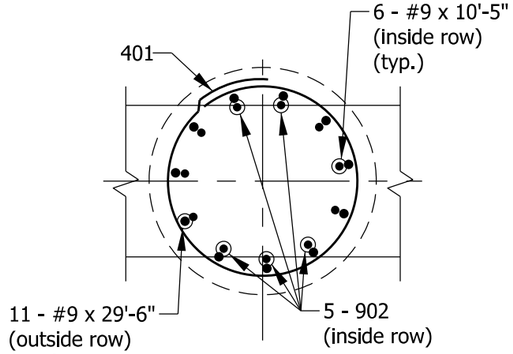

DETAIL N

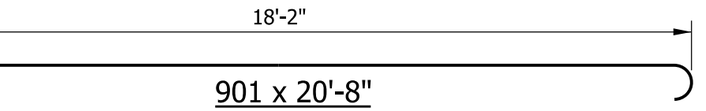

901 x 20'-8"

NOTES:

1. Each tie shall be rotated 90 degrees from the previous tie to stagger lap locations.
2. See Standard Drawing E 802-SBTS-16 for anchor bolt and anchor plate detals.
3. Both ends of steel conduit shall be capped.
4. See Standard Drawing E 802-SBTS-41 for quantities.
5. See Standard Drawing E 703-BRST series for reinforcing-bar bending details and notes.
6. Only one ground rod per structure is required.
7. See Standard Drawing E 802-SBTS-13 for base plate details.
8. Minimum concrete strength f'c = 3500 psi.
9. Top of foundation shall be level.
10. For slopes steeper than 3:1 the Alternate Drilled Shaft Foundation shall be used.

INDIANA DEPARTMENT OF TRANSPORTATION

SIGN BOX TRUSS STRUCTURE TYPE F, G, H ALTERNATE DRILLED SHAFT FOUNDATION FOR MEDIAN OR SHOULDER, 36" HEIGHT

SEPTEMBER 2022

STANDARD DRAWING NO. E 802-SBTS-40

DAVID H. BORUFF REGISTERED No. 60900348 STATE OF INDIANA PROFESSIONAL ENGINEER

5/17/22
DESIGN STANDARDS ENGINEER DATE

07/07/2022
CHIEF ENGINEER DATE

ALTERNATE DRILLED SHAFT FOUNDATION AT 33" CONCRETE BARRIER WALL			
EPOXY-COATED REINFORCING BARS			
MARK OR SIZE	NO. OF BARS	LENGTH	WEIGHT
901	4	20'-8"	
#9	4	18'-2"	
#9	22	32'-9"	
Total #9			2978 LBS
503	19	8'-0"	
504	38	3'-4"	
505	38	4'-11"	
#5	6	18'-2"	
Total #5			599 LBS
401	62	10'-5"	
Total #4			431 LBS
Total Epoxy-Coated Reinforcing Bars			4008 LBS
CONCRETE, CLASS A			
Total Concrete, Class A			25.8 CYS
MISCELLANEOUS			
Surface Seal			18.0 SYS

ALTERNATE DRILLED SHAFT FOUNDATION AT 45" CONCRETE BARRIER WALL			
EPOXY-COATED REINFORCING BARS			
MARK OR SIZE	NO. OF BARS	LENGTH	WEIGHT
901	4	20'-8"	
#9	4	18'-2"	
#9	22	33'-9"	
Total #9			3053 LBS
503	19	8'-0"	
505	38	4'-11"	
506	38	4'-4"	
#5	8	18'-2"	
Total #5			677 LBS
401	62	10'-5"	
Total #4			431 LBS
Total Epoxy-Coated Reinforcing Bars			4161 LBS
CONCRETE, CLASS A			
Total Concrete, Class A			26.5 CYS
MISCELLANEOUS			
Surface Seal			22.2 SYS

ALTERNATE DRILLED SHAFT FOUNDATION FOR MEDIAN OR SHOULDER, 36" HEIGHT			
EPOXY-COATED REINFORCING BARS			
MARK OR SIZE	NO. OF BARS	LENGTH	WEIGHT
901	4	20'-8"	
902	10	10'-5"	
#9	4	18'-2"	
#9	12	10'-5"	
#9	22	29'-6"	
Total #9			3514 LBS
507	38	8'-6"	
#5	8	18'-2"	
Total #5			488 LBS
401	62	10'-5"	
Total #4			431 LBS
Total Epoxy-Coated Reinforcing Bars			4433 LBS
CONCRETE, CLASS A			
Total Concrete, Class A			23.1 CYS
MISCELLANEOUS			
Surface Seal			21.6 SYS

Quantities are only for the depth of footing for slope 3:1 or less.

INDIANA DEPARTMENT OF TRANSPORTATION

SIGN BOX TRUSS STRUCTURE TYPE F, G, H ALTERNATE DRILLED SHAFT FOUNDATIONS QUANTITIES SEPTEMBER 2022

STANDARD DRAWING NO. E 802-SBTS-41

DAVID H. BORUFF REGISTERED No. 60900348 STATE OF INDIANA PROFESSIONAL ENGINEER

David H Boruff 5/17/22
DESIGN STANDARDS ENGINEER DATE

07/07/2022
CHIEF ENGINEER DATE

INDEX	
SHEET NO.	SUBJECT
1	Index
2	Double Arm Plan and Elevation
3	Double Arm Panel Dimensions and Member Sizes
4	Double Arm Connections, Weld Details, Chord End Plate Details, and Camber
5	Double Arm Connection to Column Details
6	Double Arm Column Top Cap and Cable J-Hook
7	Quadri-Chord Plan and Elevation
8	Quadri-Chord Panel Dimensions and Member Sizes
9	Quadri-Chord Connections, Weld Details, Chord End Plate Details, and Camber
10	Quadri-Chord Lower Arm Connection to Column and Wire Outlet Detail
11	Quadri-Chord Upper Arm Connection to Column
12	Double Arm and Quadri-Chord Base Plate, Anchor Bolt, and Metal Skirt Details
13	Double Arm and Quadri-Chord Column Handhole and I.D. Plate Details
14	Structure Type A & B Foundation at 33" Concrete Barrier
15	Structure Type C, D, & E Foundation at 33" Concrete Barrier
16	Structure Type F, G, H, & I Foundation at 33" Concrete Barrier
17	Structure Type A & B Foundation at 45" Concrete Barrier
18	Structure Type C, D, & E Foundation at 45" Concrete Barrier
19	Structure Type F, G, H, & I Foundation at 45" Concrete Barrier
20	Structure Type A & B Foundation, 36" Height
21	Structure Type C, D, & E Foundation, 36" Height
22	Structure Type F, G, H, & I Foundation, 36" Height

INDIANA DEPARTMENT OF TRANSPORTATION

SIGN CANTILEVER STRUCTURE
INDEX

SEPTEMBER 2022

STANDARD DRAWING NO. E 802-SCLS-01

DAVID H. BORUFF
REGISTERED
No. 60900348
STATE OF INDIANA
PROFESSIONAL ENGINEER

David H Boruff 05/17/22
DESIGN STANDARDS ENGINEER DATE

07/07/2022
CHIEF ENGINEER DATE

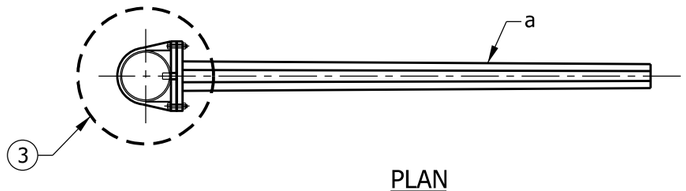

PLAN

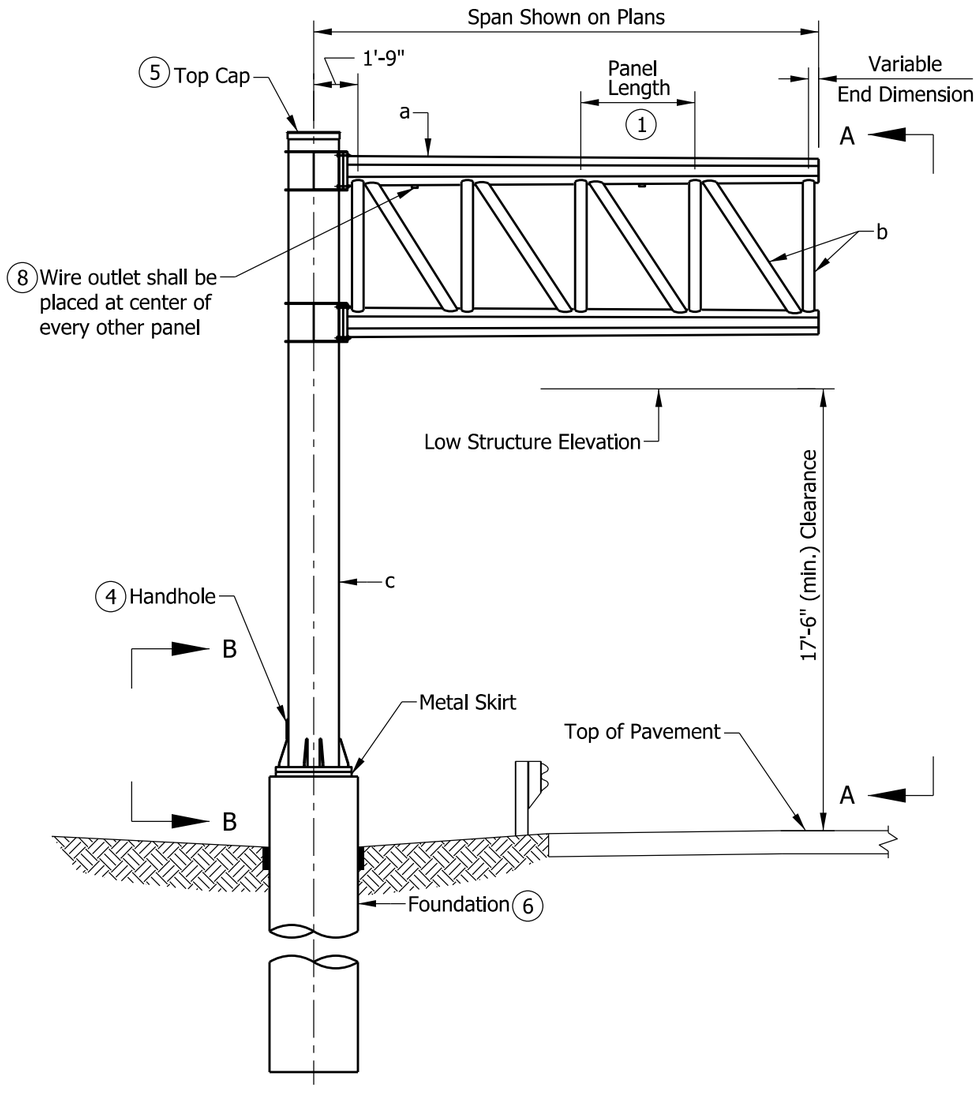

FRONT ELEVATION

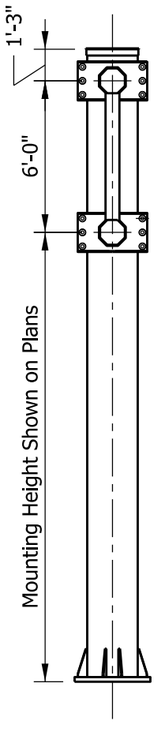

ELEVATION A-A

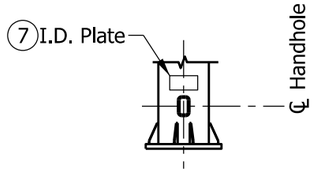

ELEVATION B-B

NOTES:

1. See Standard Drawing E 802-SCLS-03 for panel dimensions and member sizes.
2. Maximum deviation of a chord from a straight line shall be ⅛ in.
3. See Standard Drawing E 802-SCLS-05 for connection to column details.
4. See Standard Drawing E 802-SCLS-13 for handhole detail.
5. See Standard Drawing E 802-SCLS-06 for top cap and cable J-hook detail.
6. See Standard Drawings E 802-SCLS-14, 17, and 20 for foundation details.
7. See Standard Drawing E 802-SCLS-13 for I.D. Plate detail.
8. See Standard Drawing E 802-SCLS-10 for wire outlet detail.

LEGEND:

a - Chord

b - Vertical and Vertical Diagonal

c - Column

INDIANA DEPARTMENT OF TRANSPORTATION

SIGN CANTILEVER STRUCTURE
DOUBLE ARM
PLAN AND ELEVATION
SEPTEMBER 2022

STANDARD DRAWING NO. E 802-SCLS-02

DAVID H. BORUFF REGISTERED No. 60900348 STATE OF INDIANA PROFESSIONAL ENGINEER

David H Boruff 05/17/22
DESIGN STANDARDS ENGINEER DATE

07/07/2022
CHIEF ENGINEER DATE

DOUBLE ARM PANEL DIMENSIONS			
SPAN	NO. OF PANELS	PANEL LENGTH	VARIABLE END DIMENSION
10'	2	4'-0"	0'-3"
11'	3	3'-0"	0'-3"
12'	3	3'-3"	0'-6"
13'	3	3'-6"	0'-9"
14'	3	4'-0"	0'-3"
15'	3	4'-3"	0'-6"
16'	4	3'-6"	0'-3"
17'	4	3'-9"	0'-3"
18'	4	4'-0"	0'-3"
19'	4	4'-3"	0'-3"
20'	4	4'-6"	0'-3"

NOTES:

1. All panels on the double arm shall be the same length. The minimum panel length is 3 ft - 0 in. and the maximum is 4 ft - 6 in.
2. See Standard Drawing E 802-SCLS-04 for connections, weld details, and required camber.
3. For base plate and anchor bolt details see Standard Drawing E 802-SCLS-12.
4. See Standard Drawings E 802-SCLS-14, 17, and 20 for foundation details.
5. All member diameters shown are outside diameters.
6. Double arm chord shape shall be octagonal tubular with 0.14 in./ft taper, maximum diameter shown in table.

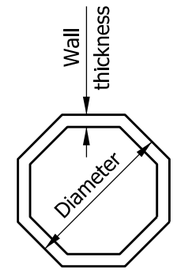

OCTAGON TUBULAR SHAPE

DOUBLE ARM MEMBER SIZES									
STR. TYPE	MAX SPAN (FT.)	MAX SIGN AREA (FT.)	MAX MOUNTING HEIGHT (FT.)	6 CHORD a		VERTICAL/VERTICAL DIAGONAL b		COLUMN c	
				DIAMETER (IN.)	WALL THICK. (IN.)	DIAMETER (IN.)	WALL THICK. (IN.)	DIAMETER (IN.)	WALL THICK. (IN.)
A	10	180	24	7 5/8	0.500	5 9/16	0.375	18	0.750
B	15	280	24	10 3/4	0.593	5 9/16	0.500	20	0.812
C	20	380	24	14	0.593	6 5/8	0.719	24	0.968

INDIANA DEPARTMENT OF TRANSPORTATION

SIGN CANTILEVER STRUCTURE
DOUBLE ARM
PANEL DIMENSIONS AND MEMBER SIZES
SEPTEMBER 2022

STANDARD DRAWING NO. E 802-SCLS-03

DAVID H. BORUFF REGISTERED No. 60900348 STATE OF INDIANA PROFESSIONAL ENGINEER

David H Boruff 05/17/22
DESIGN STANDARDS ENGINEER DATE

07/07/2022
CHIEF ENGINEER DATE

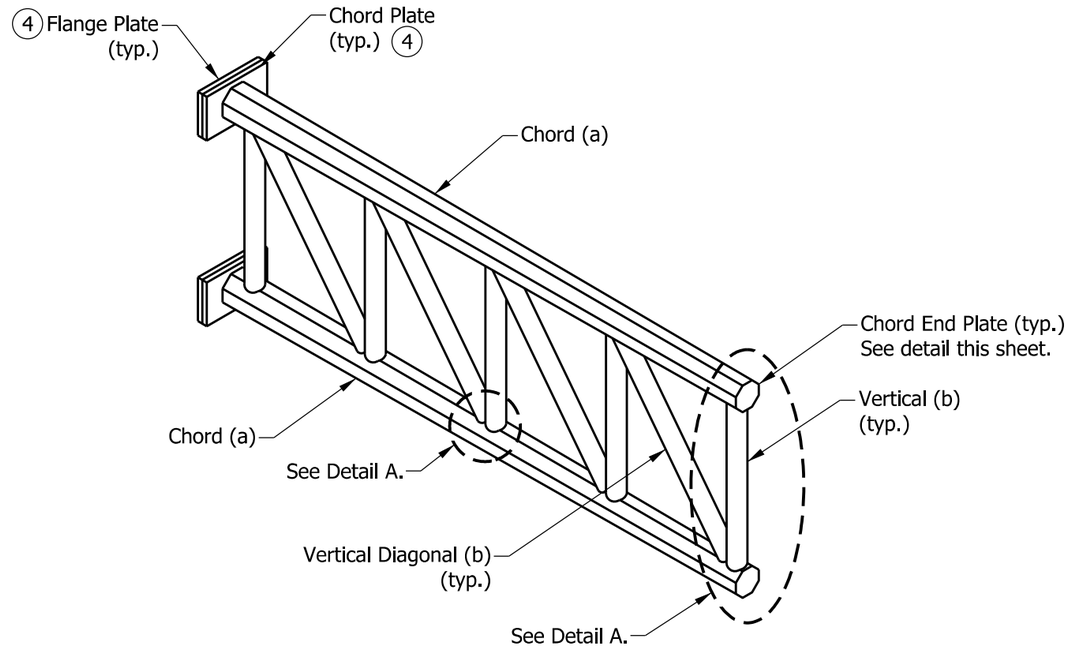

DOUBLE ARM

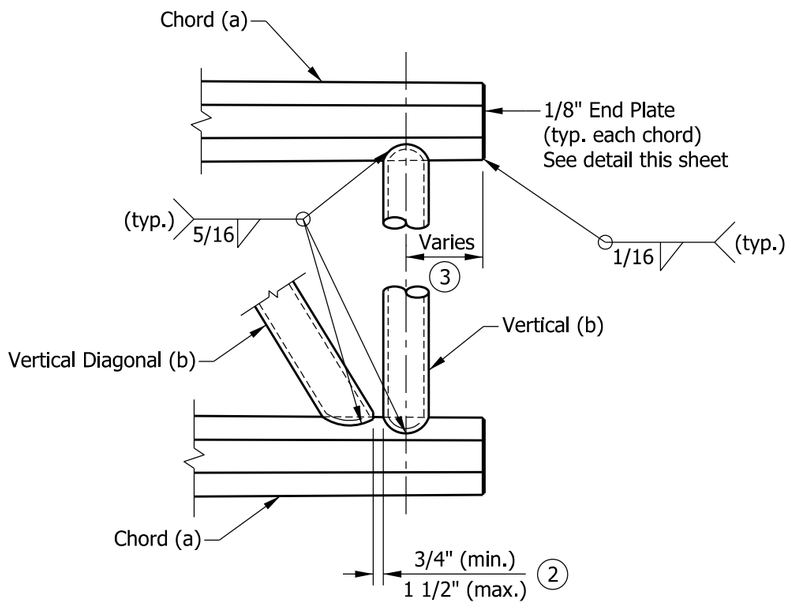

DETAIL A

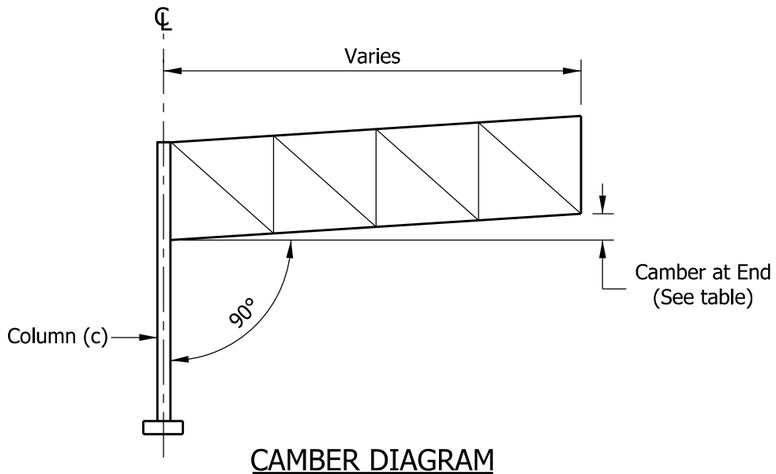

CAMBER DIAGRAM

DOUBLE ARM		
STR. TYPE	LENGTH	CAMBER AT END (IN.)
A	10'-0"	0.375
B	15'-0"	0.750
C	20-0"	1.000

NOTES:

1. See Standard Drawing E 802-SCLS-03 for panel dimensions and member sizes.
2. Vertical diagonals shall be placed for minimum offset from the panel point such that the offset shall provide a ¾ in. minimum to 1 ½ in. maximum clearance between each diagonal and vertical member, and to provide clearance for U-bolt connections to signs.
3. For variable end dimension, see table of panel dimensions on Standard Drawing E 802-SCLS-03.
4. See Standard Drawing E 802-SCLS-05 for flange plate and chord plate details.

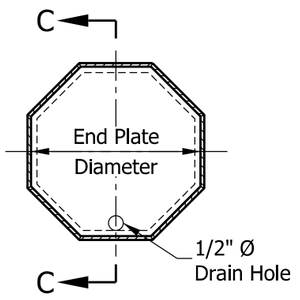

END VIEW

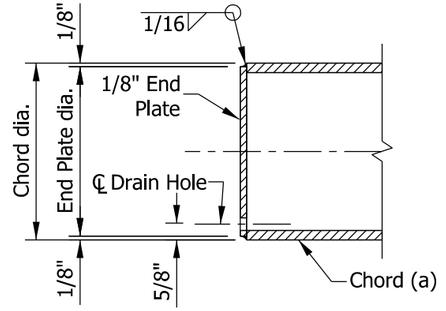

SECTION C-C

CHORD END PLATE DETAILS

INDIANA DEPARTMENT OF TRANSPORTATION

SIGN CANTILEVER STRUCTURE
DOUBLE ARM CONNECTIONS, WELD DETAILS, CHORD END PLATE DETAILS, AND CAMBER
SEPTEMBER 2022

STANDARD DRAWING NO. E 802-SCLS-04

DAVID H. BORUFF REGISTERED No. 60900348 STATE OF INDIANA PROFESSIONAL ENGINEER

David H Boruff 05/17/22
DESIGN STANDARDS ENGINEER DATE

07/07/2022
CHIEF ENGINEER DATE

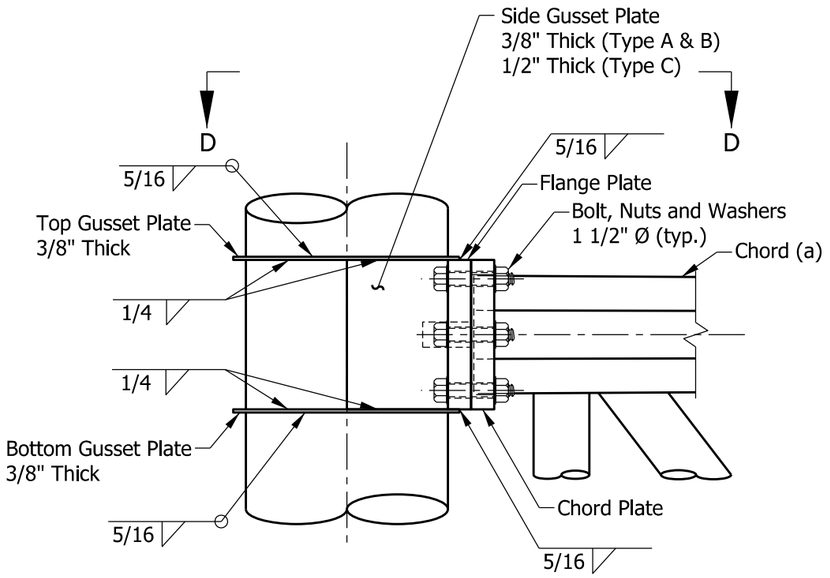

DOUBLE ARM TRUSS CONNECTION
ELEVATION

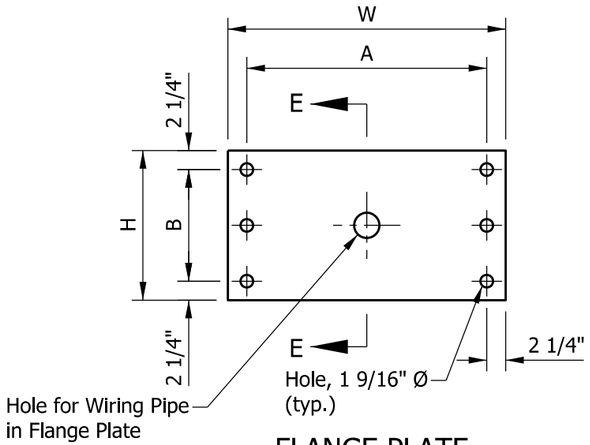

FLANGE PLATE

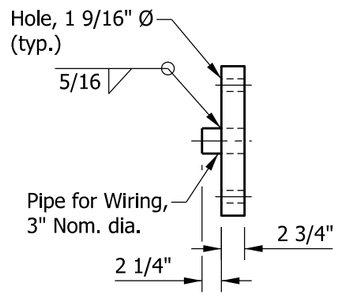

SECTION E-E

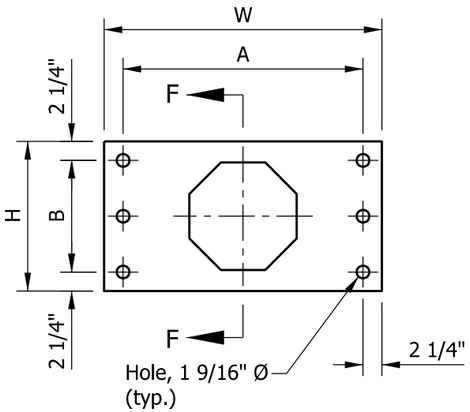

CHORD PLATE

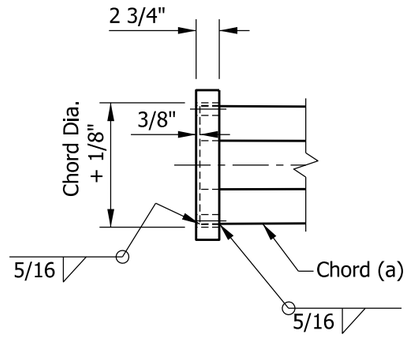

SECTION F-F

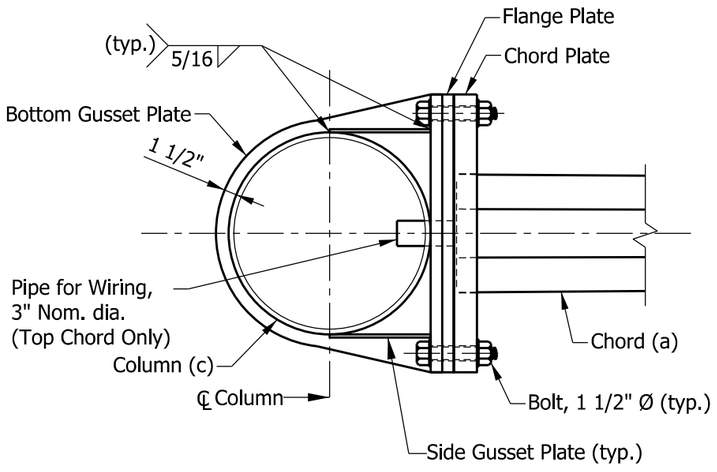

SECTION D-D

PLATE DIMENSIONS					
COLUMN DIAMETER	CHORD DIAMETER	W	H	A	B
18"	7 5/8"	2'-3"	1'-2"	1'-10 1/2"	9 1/2"
20"	10 3/4"	2'-5"	1'-5"	2'-0 1/2"	1'-0 1/2"
24"	14"	2'-9"	1'-6"	2'-4 1/2"	1'-1 1/2"

INDIANA DEPARTMENT OF TRANSPORTATION

SIGN CANTILEVER STRUCTURE
DOUBLE ARM
CONNECTION TO COLUMN DETAILS
SEPTEMBER 2022

STANDARD DRAWING NO. E 802-SCLS-05

DAVID H. BORUFF
REGISTERED
No. 60900348
STATE OF INDIANA
PROFESSIONAL ENGINEER

DESIGN STANDARDS ENGINEER — DATE 05/17/22

CHIEF ENGINEER — DATE 07/07/2022

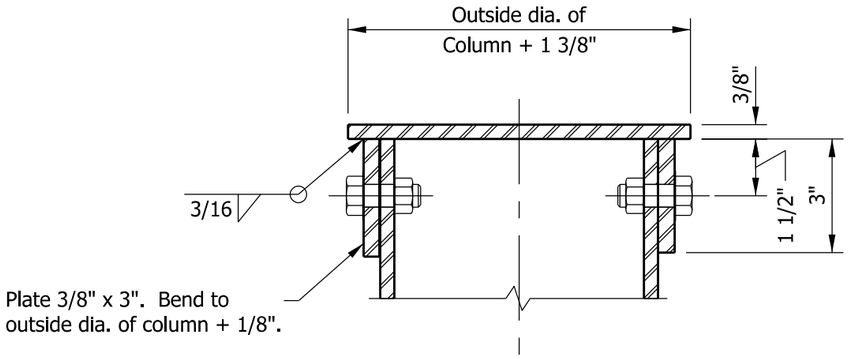

SECTION G-G

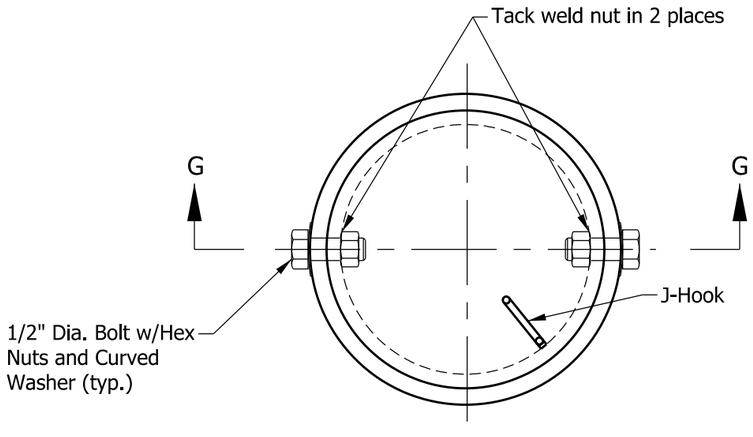

PLAN
TOP CAP - STEEL COLUMN

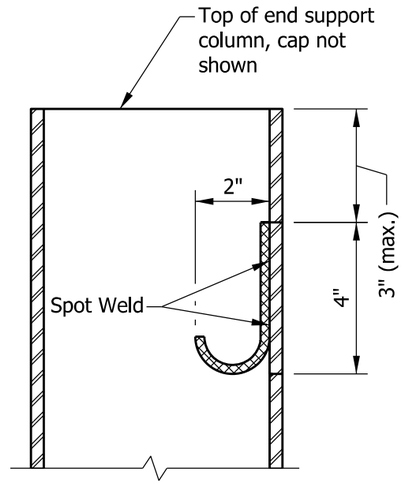

CABLE J-HOOK

NOTES:

1. J-hook shall consist of ⅜ in. dia. bars constructed as shown, and spot-welded to inside of the columns.
2. Cap bolts used to attach top cap of columns shall be located to miss J-hook.

INDIANA DEPARTMENT OF TRANSPORTATION

SIGN CANTILEVER STRUCTURE
DOUBLE ARM COLUMN TOP CAP
AND CABLE J-HOOK
SEPTEMBER 2022

STANDARD DRAWING NO. E 802-SCLS-06

DAVID H. BORUFF
REGISTERED
No.
60900348
STATE OF
INDIANA
PROFESSIONAL ENGINEER

David H Boruff 05/17/22
DESIGN STANDARDS ENGINEER DATE

07/07/2022
CHIEF ENGINEER DATE

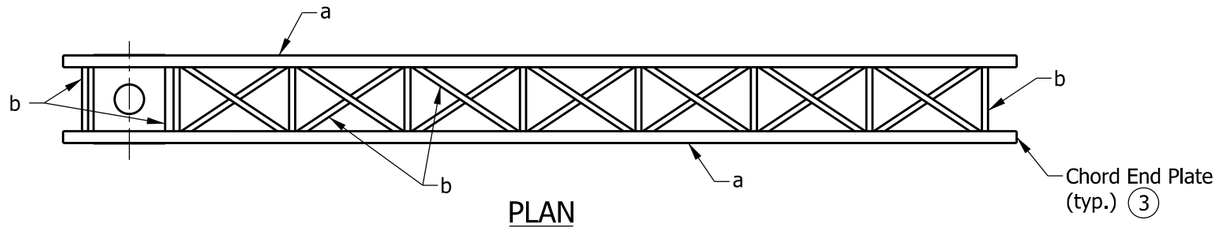

PLAN

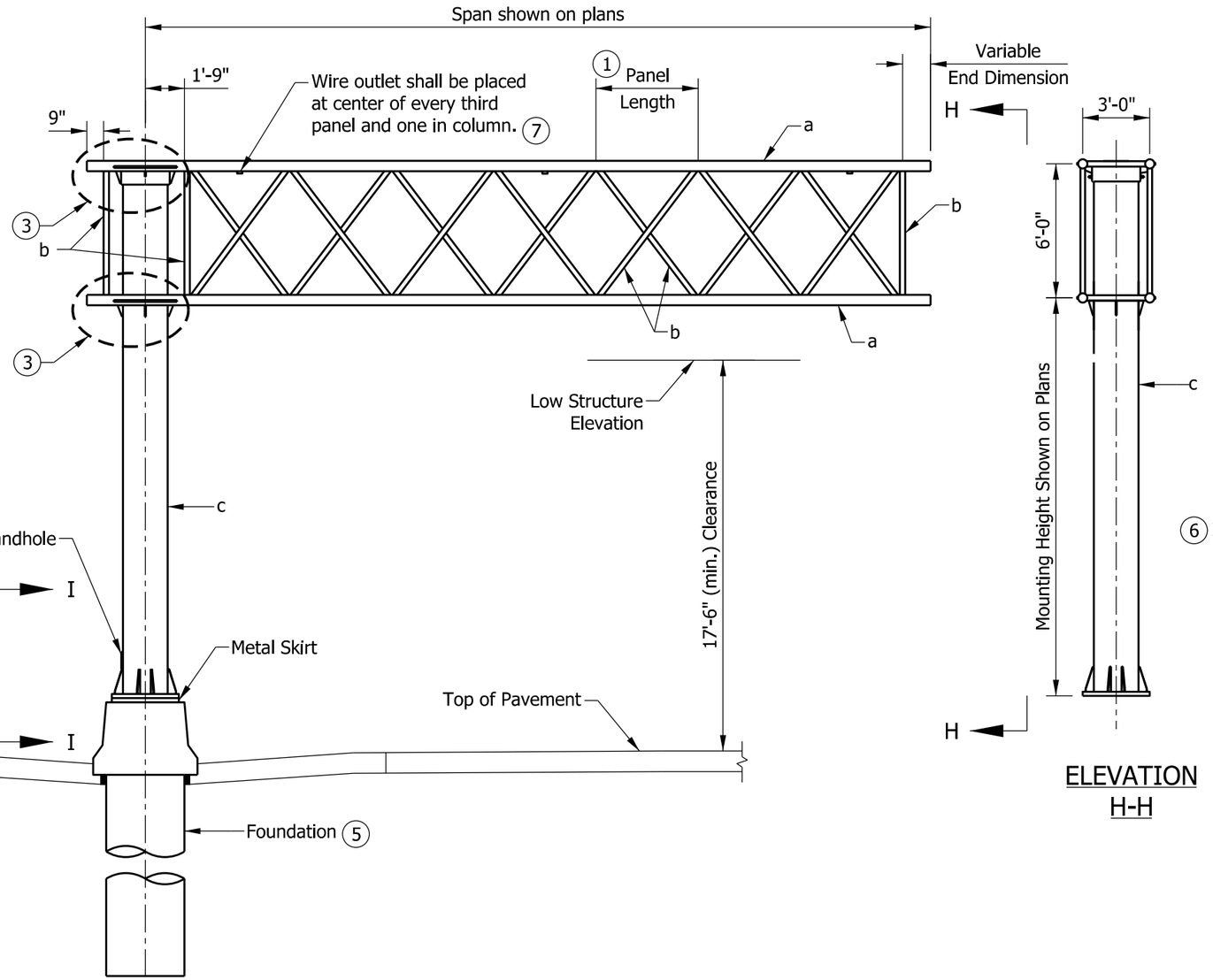

FRONT ELEVATION

ELEVATION
H-H

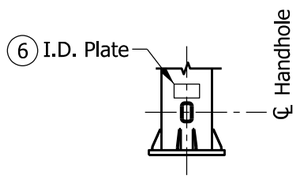

ELEVATION
I-I

NOTES:

1. See Standard Drawing E 802-SCLS-08 for panel dimensions and member sizes.
2. Maximum deviation of a chord from a straight line shall be ⅛ in.
3. See Standard Drawings E 802-SCLS-09 through 11 for quadri-chord arm connection, weld details, chord end plate details, and camber.
4. See Standard Drawing E 802-SCLS-13 for handhole detail.
5. See Standard Drawings E 802-SCLS-15, 16, 18, 19, 21, and 22 for foundation details.
6. See Standard Drawing E 802-SCLS-13 for I.D. Plate detail.
7. See Standard Drawing E 802-SCLS-10 for wire outlet detail.

LEGEND:

a - Chord

b - Interior members:
Verticals and vertical diagonals in front and back faces, and horizontals and horizontal diagonals in top and bottom faces of arm.

c - Column

INDIANA DEPARTMENT OF TRANSPORTATION

SIGN CANTILEVER STRUCTURE QUADRI-CHORD PLAN AND ELEVATION

SEPTEMBER 2022

STANDARD DRAWING NO. E 802-SCLS-07

DAVID H. BORUFF
REGISTERED
No. 60900348
STATE OF INDIANA
PROFESSIONAL ENGINEER

David H Boruff 05/17/22
DESIGN STANDARDS ENGINEER DATE

07/07/2022
CHIEF ENGINEER DATE

PANEL DIMENSIONS			
SPAN	NO. OF PANELS	PANEL LENGTH	VARIABLE END DIMENSION
21'	5	3'-9"	0'-6"
22'	5	3'-9"	1'-6"
23'	5	4'-0"	1'-3"
24'	5	4'-3"	1'-0"
25'	5	4'-6"	0'-9"
26'	6	3'-9"	1'-9"
27'	6	4'-0"	1'-3"
28'	6	4'-3"	0'-9"
29'	6	4'-3"	1'-9"
30'	6	4'-6"	1'-3"
31'	7	4'-0"	1'-3"
32'	7	4'-3"	0'-6"
33'	7	4'-3"	1'-6"
34'	7	4'-6"	0'-9"
35'	7	4'-6"	1'-9"

NOTES:

1. All panels in a structure shall be the same length. The minimum panel length is 3 ft - 9 in. and the maximum is 4 ft - 6 in.
2. See Standard Drawing E 802-SCLS-09 for connections, weld details, and required camber.
3. For base plate, anchor bolt, and metal skirt details see Standard Drawing E 802-SCLS-12.
4. All member diameters shown are outside diameters.
5. (5) Quadri-chord arm chord shape shall be circular with constant diameter.

QUADRI-CHORD MEMBER SIZES									
STR. TYPE	MAX SPAN (FT.)	MAX SIGN AREA (FT.)	MAX MOUNTING HEIGHT (FT.)	(5) CHORD a		VERT./HORIZ./DIAG. b		COLUMN c	
				DIAMETER (IN.)	WALL THICK. (IN.)	DIAMETER (IN.)	WALL THICK. (IN.)	DIAMETER (IN.)	WALL THICK. (IN.)
D	25	300	24	5 9/16	0.258	2 7/8	0.276	24	0.562
E	30	300	24	5 9/16	0.258	3 1/2	0.300	24	0.562
F	35	300	24	5 9/16	0.375	3 1/2	0.300	24	0.688
G	25	400	24	5 9/16	0.375	3 1/2	0.300	24	0.968
H	30	400	24	5 9/16	0.375	3 1/2	0.300	24	0.968
I	35	400	24	5 9/16	0.375	4	0.318	24	0.968

INDIANA DEPARTMENT OF TRANSPORTATION

SIGN CANTILEVER STRUCTURE
QUADRI-CHORD
PANEL DIMENSIONS AND MEMBER SIZES
SEPTEMBER 2022

STANDARD DRAWING NO. E 802-SCLS-08

DAVID H. BORUFF REGISTERED No. 60900348 STATE OF INDIANA PROFESSIONAL ENGINEER

DESIGN STANDARDS ENGINEER — DATE 05/17/22

CHIEF ENGINEER — DATE 07/07/2022

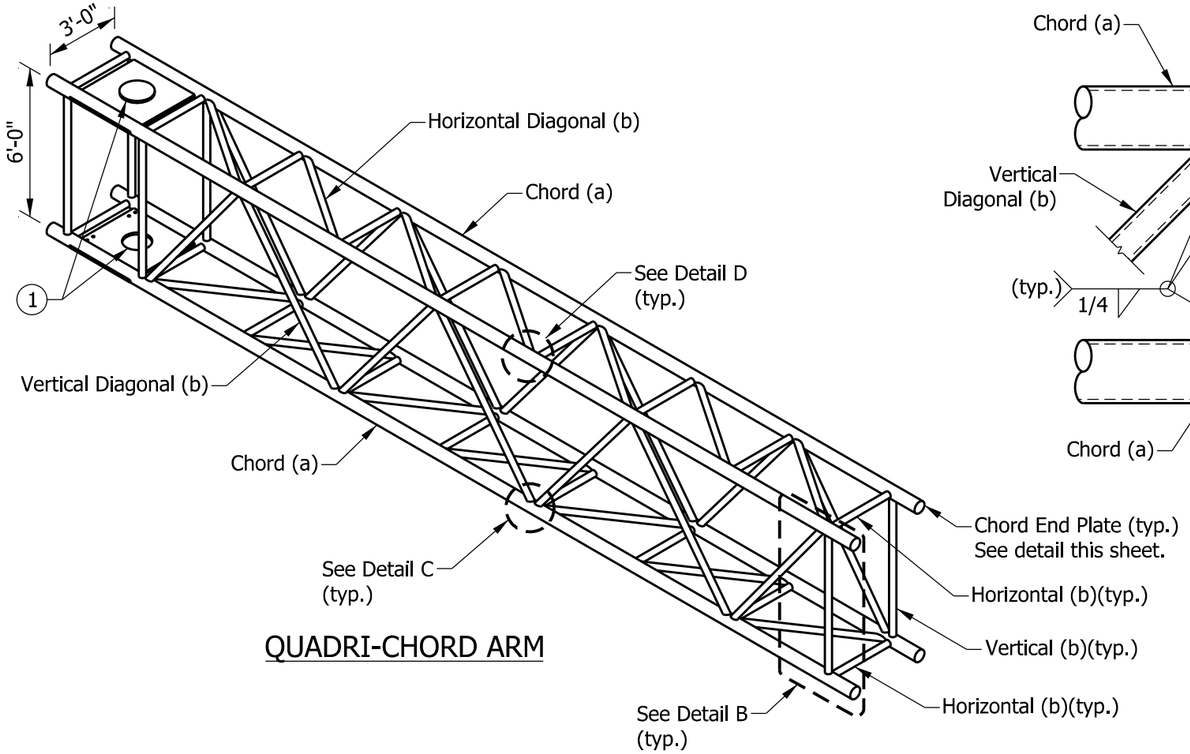

QUADRI-CHORD ARM

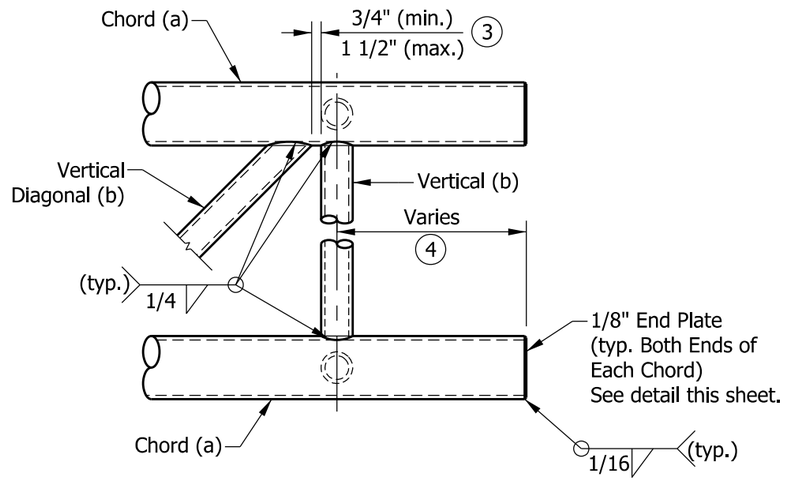

DETAIL B

NOTES:

1. See Standard Drawing E 802-SCLS-10 and 11 for quadri-chord arm connection to column details.
2. See Standard Drawing E 802-SCLS-08 for panel dimensions and member sizes.
3. Vertical diagonals shall be placed for minimum offset from the panel point such that the offset shall provide a ¾ in. minimum to 1 ½ in. maximum clearance between each diagonal and vertical member, and to provide clearance for U-bolt connections to signs.
4. For variable end dimension, see table on Standard Drawing E 802-SCLS-08.

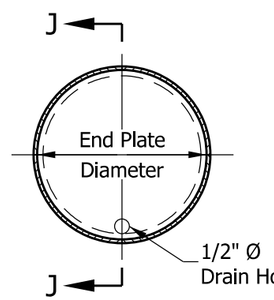

END VIEW

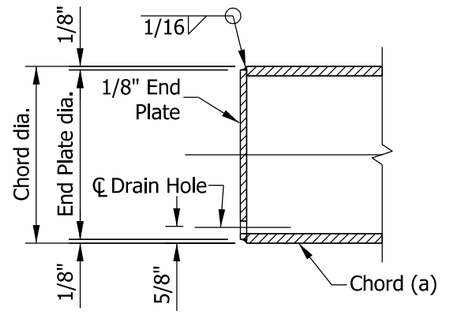

SECTION J-J

CHORD END PLATE DETAILS

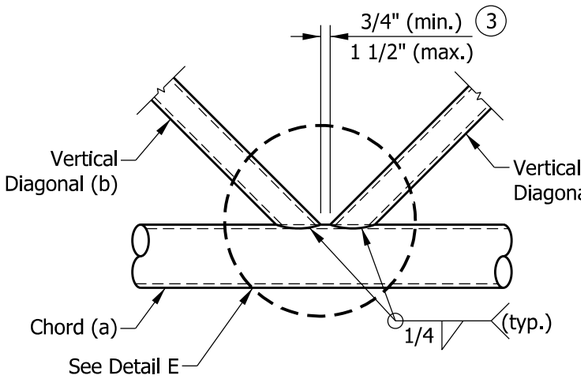

DETAIL C
TYPICAL PANEL CONNECTION

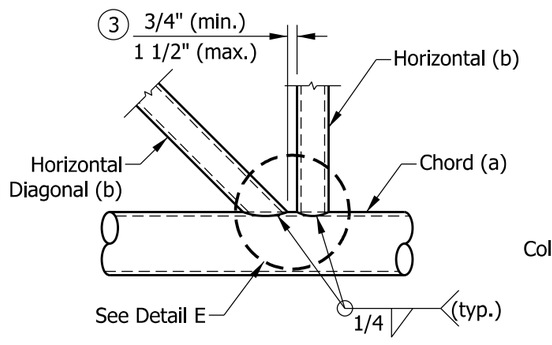

DETAIL D
TYPICAL PANEL CONNECTION

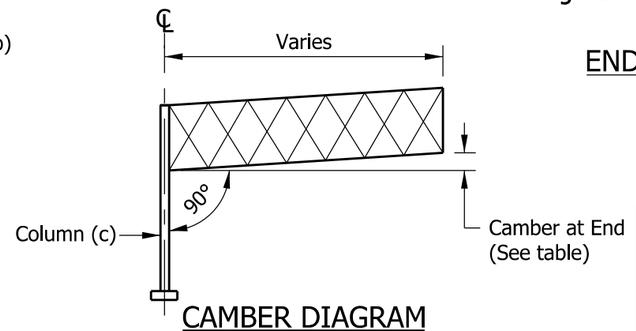

CAMBER DIAGRAM

Top edge of diagonal member shall be cut back to facilitate throat thickness per AWS D 1.1, Figure 10.5

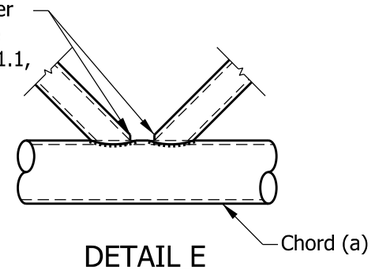

DETAIL E

QUADRI-CHORD ARM		
STR. TYPE	LENGTH	CAMBER AT END (IN.)
D	25'-0"	1.750
E	30'-0"	2.625
F	35'-0"	3.500
G	25'-0"	1.250
H	30'-0"	2.000
I	35'-0"	3.000

INDIANA DEPARTMENT OF TRANSPORTATION

SIGN CANTILEVER STRUCTURE
QUADRI-CHORD CONNECTIONS, WELD DETAILS, CHORD END PLATE DETAILS, AND CAMBER
SEPTEMBER 2022

STANDARD DRAWING NO. E 802-SCLS-09

DAVID H. BORUFF REGISTERED No. 60900348 STATE OF INDIANA PROFESSIONAL ENGINEER

David H Boruff 05/17/22
DESIGN STANDARDS ENGINEER DATE

07/07/2022
CHIEF ENGINEER DATE

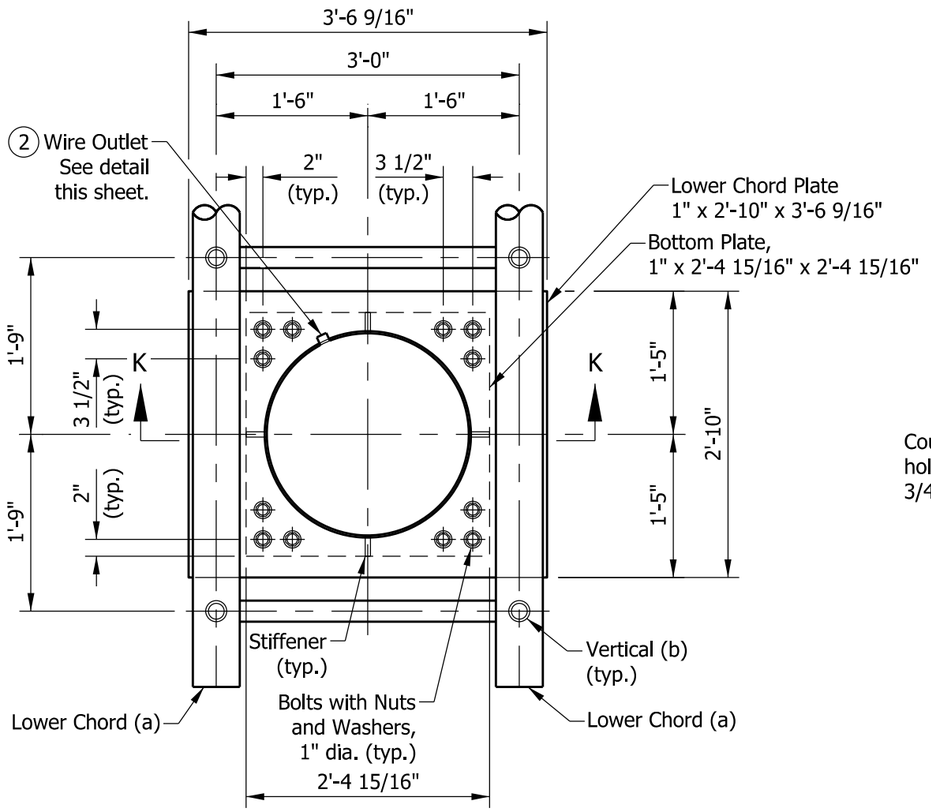

PLAN VIEW THROUGH COLUMN ABOVE LOWER CHORDS

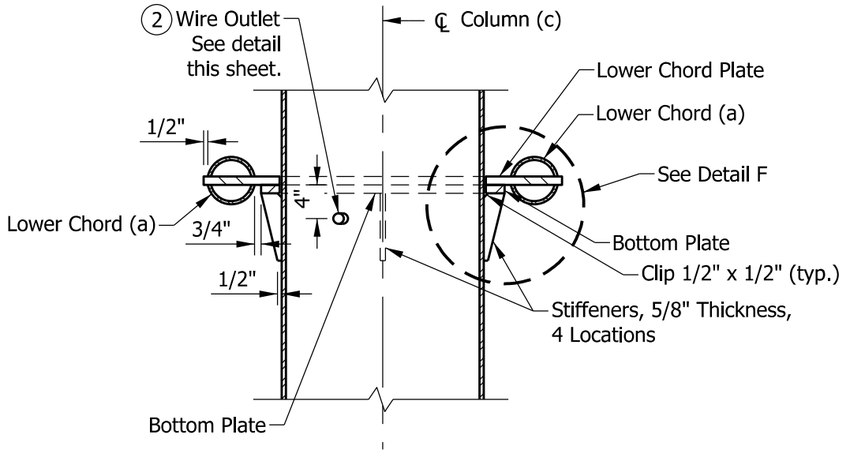

SECTION K-K

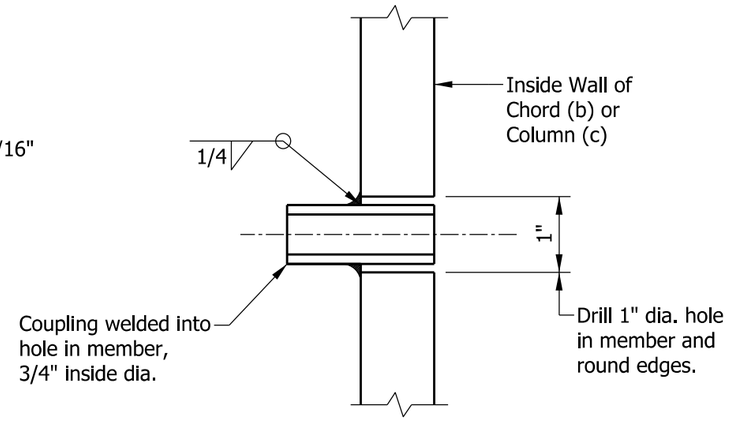

TYPICAL WIRE OUTLET

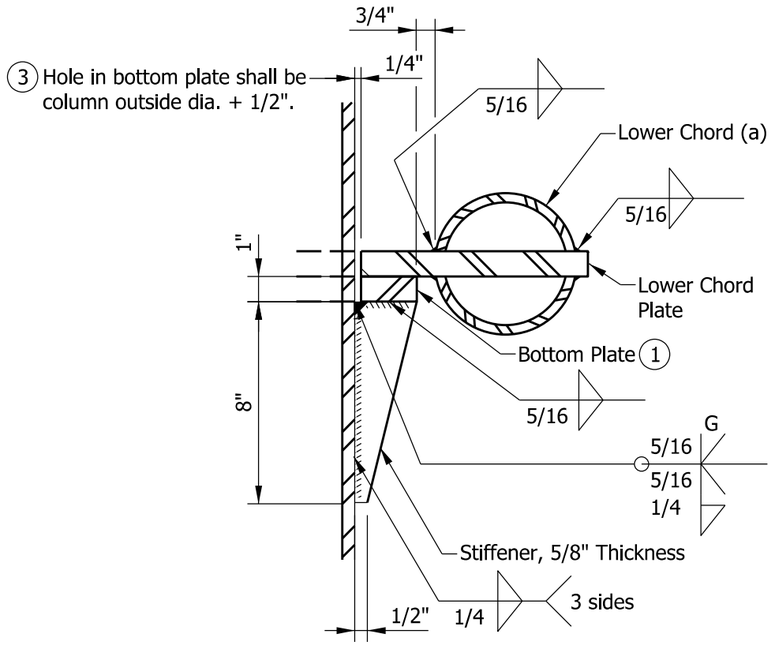

DETAIL F

NOTES:

1. If necessary, the top bottom plate shall be ground to fully seat lower chord plate. Any damages galvanizing shall be repaired before assembly.
2. Pipe shall be oriented towards sign. Hole diameter in column shall equal outside pipe diameter + ⅛ in.
3. After tightening lower connection bolts, gap shall be filled with non-hardening silicone caulk suitable for exterior exposure.

INDIANA DEPARTMENT OF TRANSPORTATION

SIGN CANTILEVER STRUCTURE
QUADRI-CHORD LOWER ARM CONNECTION
TO COLUMN AND WIRE OUTLET DETAIL
SEPTEMBER 2022

STANDARD DRAWING NO. E 802-SCLS-10

DAVID H. BORUFF REGISTERED No. 60900348 STATE OF INDIANA PROFESSIONAL ENGINEER

David H Boruff 05/17/22
DESIGN STANDARDS ENGINEER DATE

07/07/2022
CHIEF ENGINEER DATE

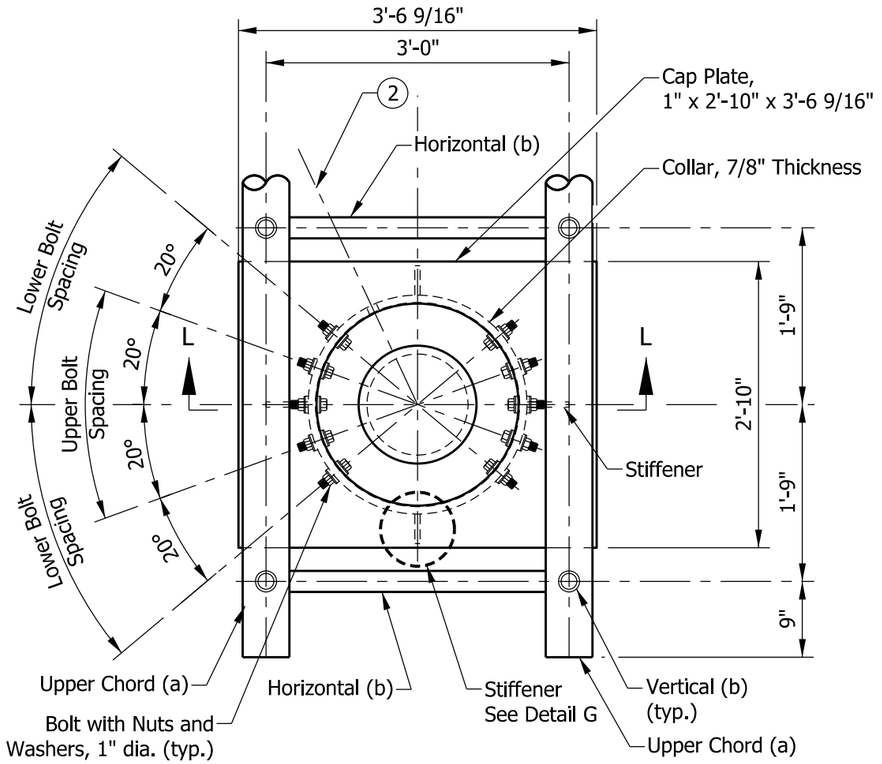

PLAN VIEW - TOP OF COLUMN
ABOVE UPPER CHORDS

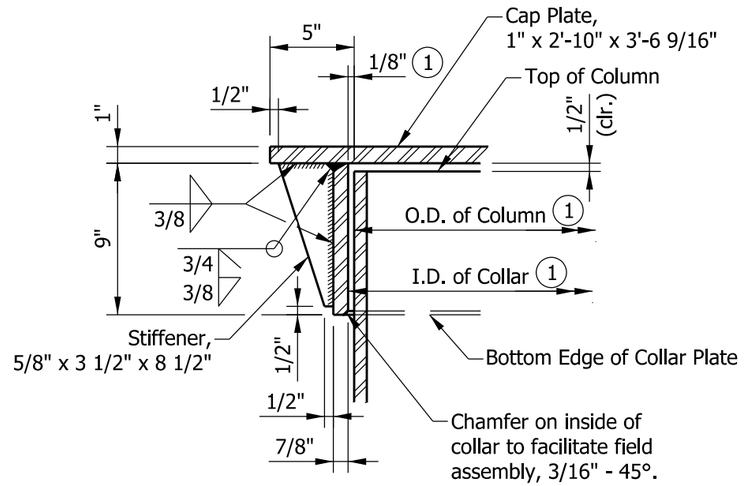

DETAIL G

NOTES:

1. After galvanizing, collar inside diameter shall equal outside diameter of galvanized column plus ⅛ in. ±1/16 in. Maximum gap between column and collar shall be ⅛ in. before tightening bolts.
2. Optional full penetration weld in collar may be made at two locations, 180° apart. X-ray or ultrasonic test (UT) 100%.
3. See Standard Drawing E 802-SCLS-08 for dimensions and member sizes.

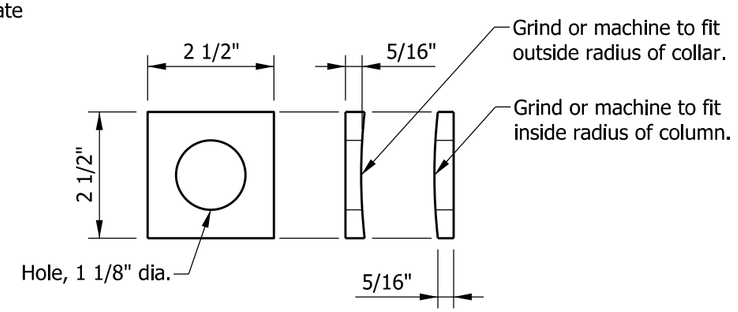

CONTOURED WASHER

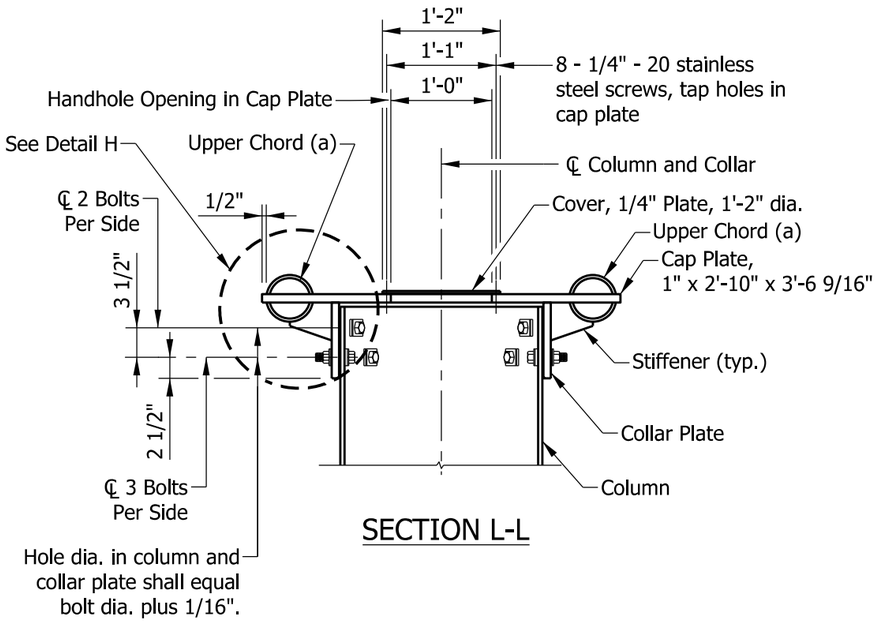

SECTION L-L

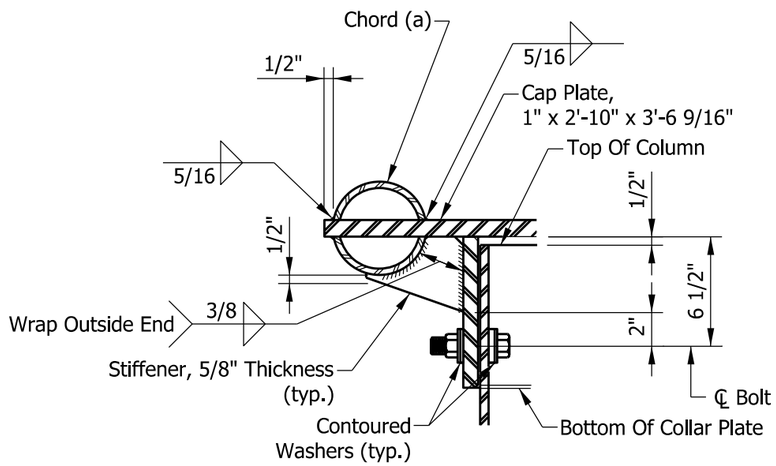

DETAIL H

INDIANA DEPARTMENT OF TRANSPORTATION

SIGN CANTILEVER STRUCTURE
QUADRI-CHORD UPPER ARM CONNECTION
TO COLUMN
SEPTEMBER 2022

STANDARD DRAWING NO. E 802-SCLS-11

DAVID H. BORUFF
REGISTERED
No.
60900348
STATE OF
INDIANA
PROFESSIONAL ENGINEER

David H Boruff 05/17/22
DESIGN STANDARDS ENGINEER DATE

07/07/2022
CHIEF ENGINEER DATE

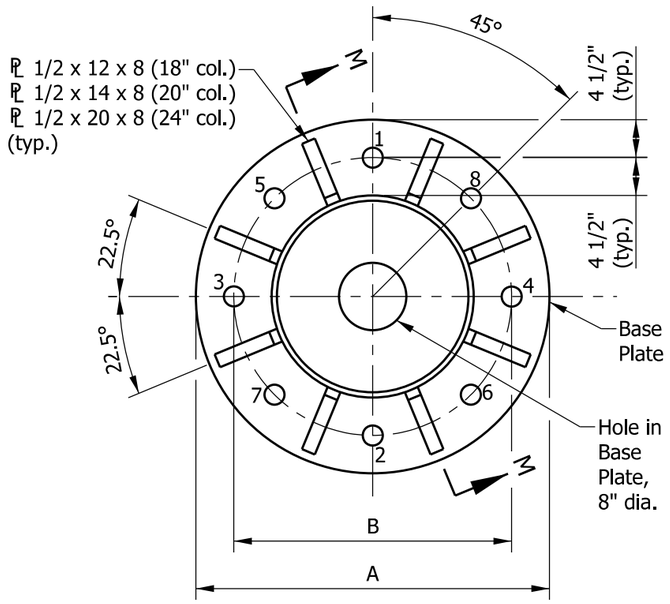

PLAN (4)

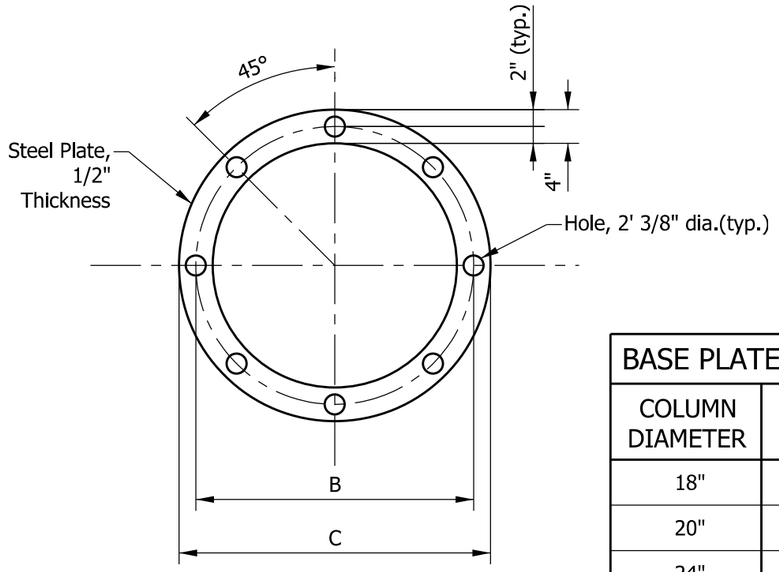

ANCHOR AND POSITIONING PLATE

BASE PLATE DIMENSIONS			
COLUMN DIAMETER	A	B	C
18"	3'-0"	2'-3"	2'-7"
20"	3'-2"	2'-5"	2'-9"
24"	3'-6"	2'-9"	3'-1"

NOTES:

(1) Minimum length which shall be galvanized. Entire bolt may be galvanized at contractor's option.

(2) Uncoated nut shall be provided at bottom of anchor plate. Thread shall be deformed or a chemical thread locked used to secure.

(3) A ¼ in. x H minimum continuous backer ring shall be used. Tack weld shall be done in the root area of the final weld. See Backer Ring Table for dimension H.

(4) Anchor bolt nuts shall be tightened in the order 1-8 against the base plate by turning the nut a minimum of 1/6 turn from snug tight condition shown in plan view. Lubricant shall be from INDOT's Qualified Products List.

(5) See Standard Drawings E 802-SCLS-03 and 08 for column wall thickness.

(6) UT - Ultrasonic Testing, 25% of entire column to base plate weld. MT - Magnetic Particle Testing, 25% or 1 side of 4 stiffeners.

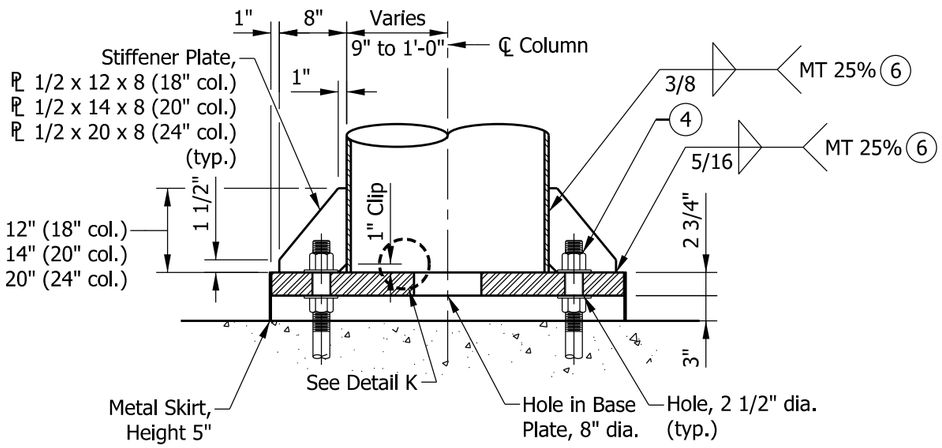

SECTION M-M

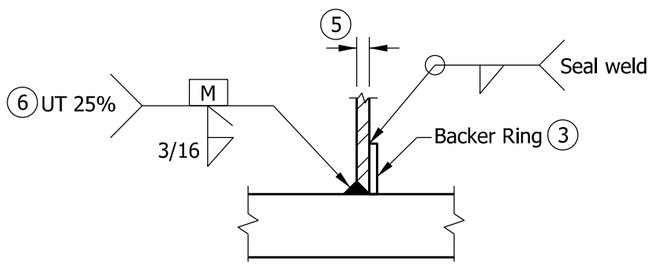

DETAIL K
BASE PLATE WELD

BACKER RING TABLE	
COLUMN WALL THICKNESS (in.)	H (in.)
0.5<t≤0.6875	4
0.6875<t≤0.875	5
0.875<t	6

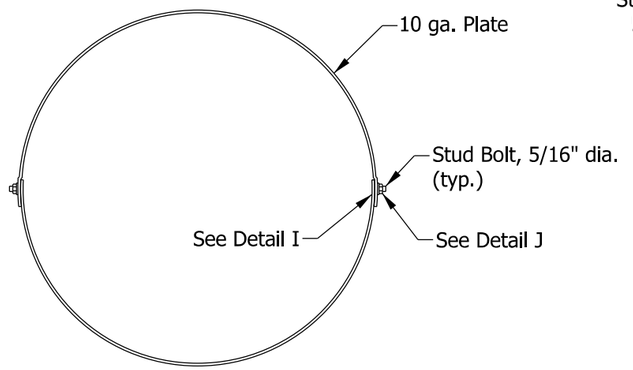

SKIRT DETAIL

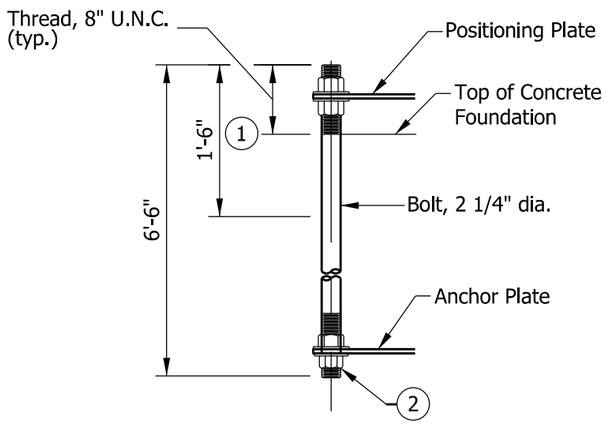

ANCHOR BOLT DETAIL

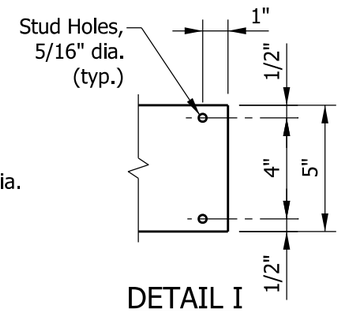

DETAIL I

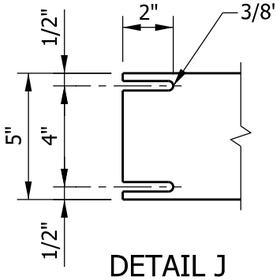

DETAIL J

INDIANA DEPARTMENT OF TRANSPORTATION

SIGN CANTILEVER STRUCTURE
DOUBLE ARM AND QUADRI-CHORD BASE PLATE, ANCHOR BOLT, AND METAL SKIRT DETAILS
SEPTEMBER 2022

STANDARD DRAWING NO. E 802-SCLS-12

DAVID H. BORUFF REGISTERED No. 60900348 STATE OF INDIANA PROFESSIONAL ENGINEER

DESIGN STANDARDS ENGINEER — 05/17/22 DATE

CHIEF ENGINEER — 07/07/2022 DATE

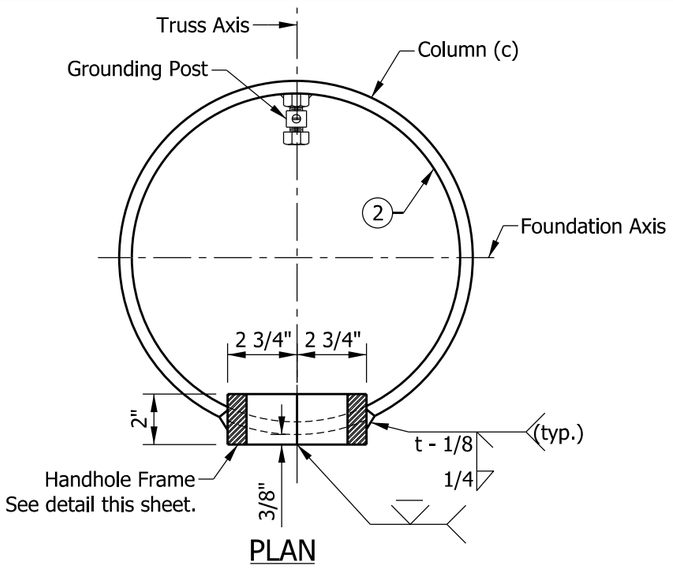

PLAN

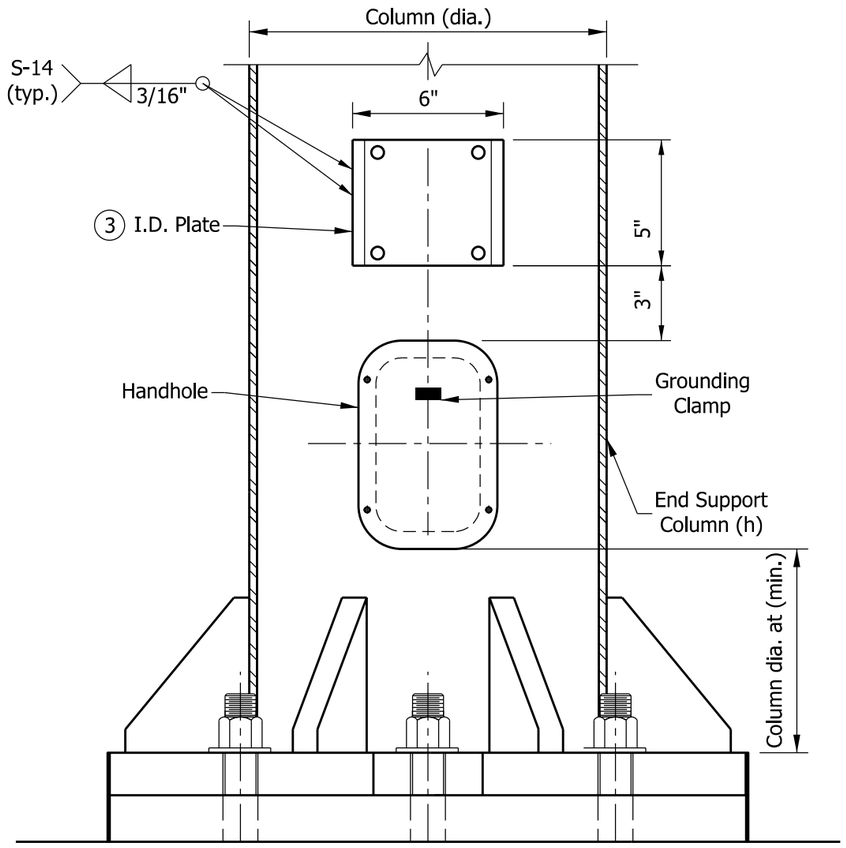

ELEVATION
VIEW FROM HANDHOLE SIDE

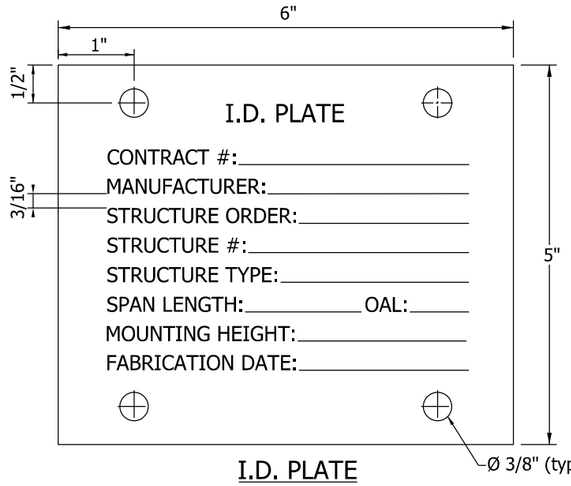

I.D. PLATE

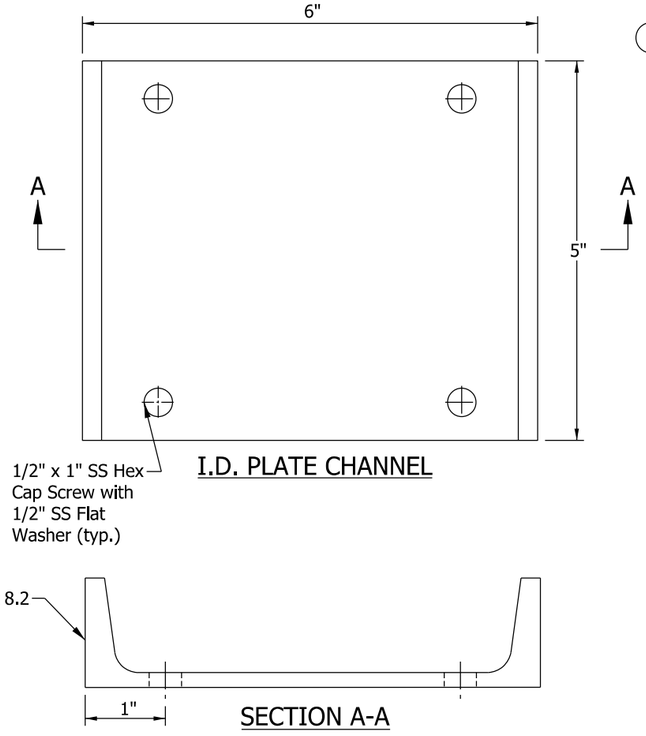

I.D. PLATE CHANNEL

SECTION A-A

NOTES:

1. In lieu of fabricated handhole frame as shown, frame may be cut from 2 in. plate with rolling direction vertical.
2. See Standard Drawing E 802-SNWR-03 for grounding post details. Grounding post shall be placed on far side of support directly opposite center of handhole.
3. I.D. plate shall be a ⅛ in. stainless steel plate with the information stamped in $\frac{3}{16}$ in. black letters:

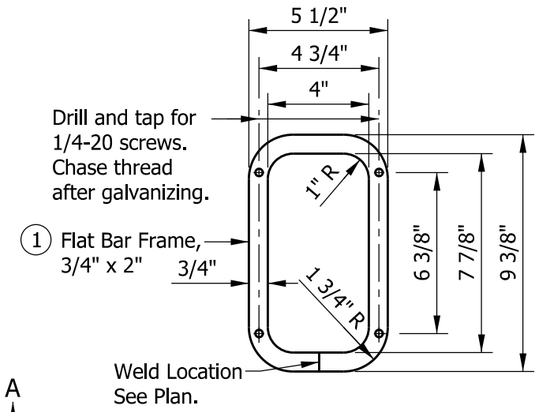

HANDHOLE FRAME

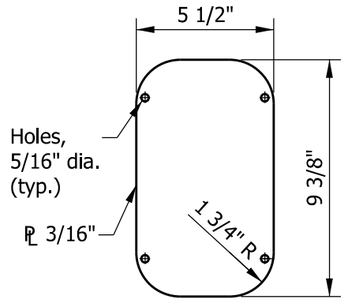

HANDHOLE COVER

INDIANA DEPARTMENT OF TRANSPORTATION

SIGN CANTILEVER STRUCTURE
DOUBLE ARM AND QUADRI-CHORD
COLUMN HANDHOLE AND I.D. PLATE DETAILS
SEPTEMBER 2022

STANDARD DRAWING NO. E 802-SCLS-13

DAVID H. BORUFF
REGISTERED
No.
60900348
STATE OF
INDIANA
PROFESSIONAL ENGINEER

David H Boruff 05/17/22
DESIGN STANDARDS ENGINEER DATE

07/07/2022
CHIEF ENGINEER DATE

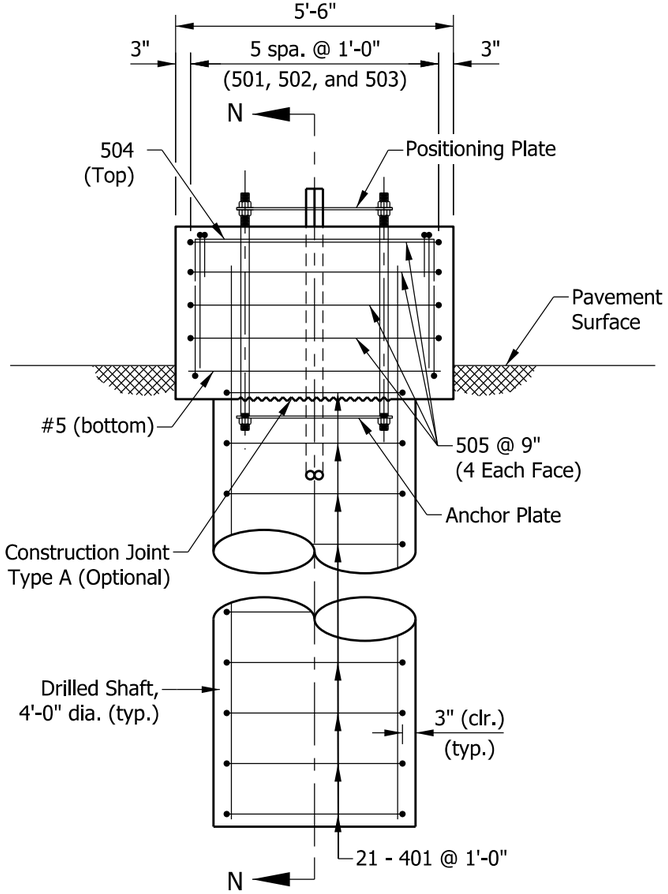

ELEVATION

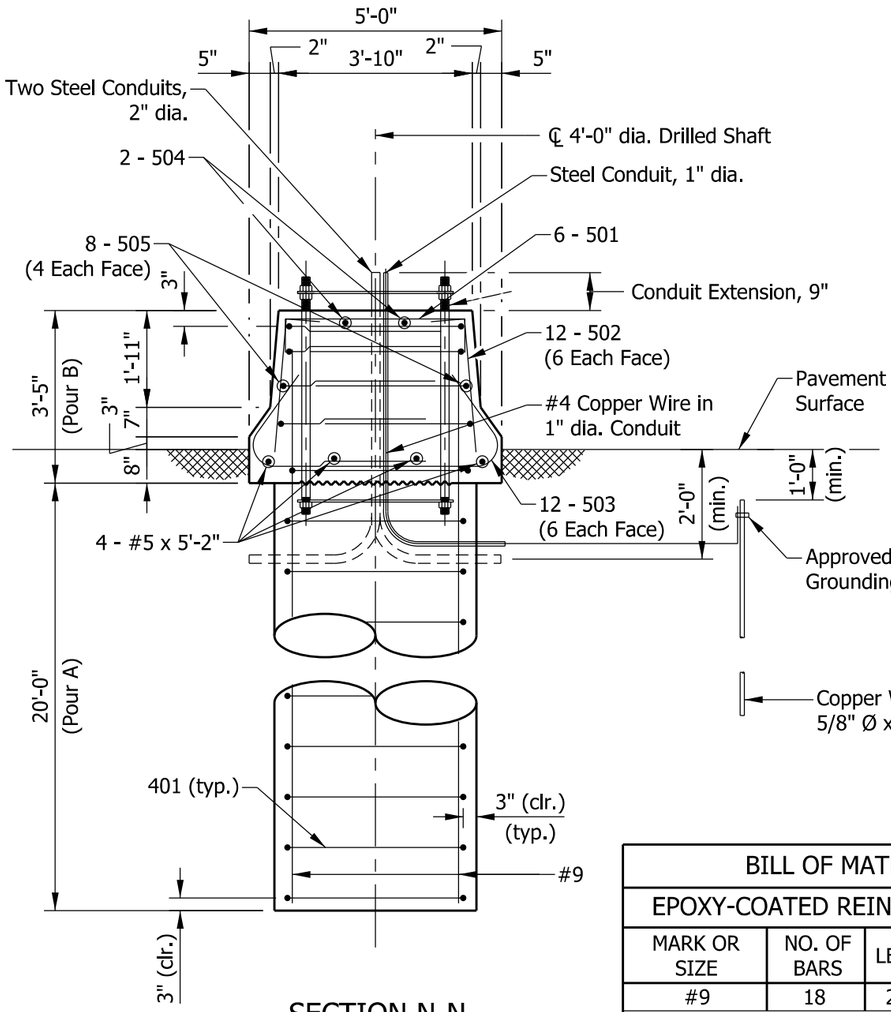

SECTION N-N

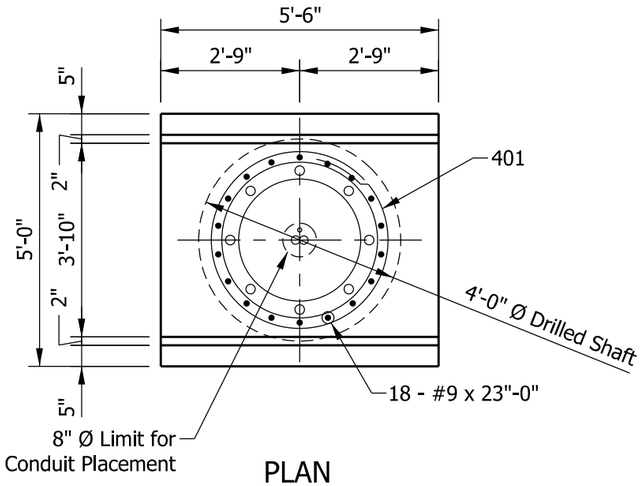

PLAN

NOTES:

1. See Standard Drawing E 602-CCMB-03 for barrier wall width transition.
2. See Standard Drawing E 802-SCLS-12 for anchor and positioning plate and anchor bolt details.
3. Both ends of steel conduit shall be threaded and capped.
4. Each tie shall be rotated 90 degrees from previous tie to stagger lap locations.
5. Top and sides of barrier railing shall be suface sealed to the pavement surface.
6. Minimum concrete Strength f'c=3500 psi.

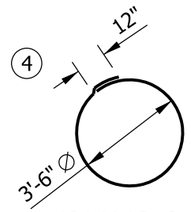

401 X 12'-0"

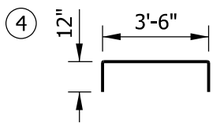

501 X 5'-6"

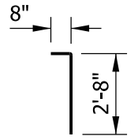

502 X 3'-4"

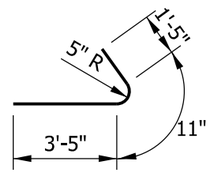

503 X 5'-9"

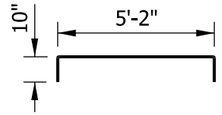

504 X 6'-10"

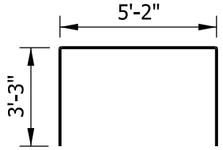

505 X 11'-8"

BILL OF MATERIALS			
EPOXY-COATED REINFORCING BARS			
MARK OR SIZE	NO. OF BARS	LENGTH	WEIGHT
#9	18	23'-0"	
Total #9			1408 LBS
501	6	5'-6"	
502	12	3'-4"	
503	12	5'-9"	
504	2	6'-10"	
505	8	11'-8"	
#5	4	5'-2"	
Total #5			281 LBS
401	21	12'-0"	
Total #4			169 LBS
Total Epoxy-Coated Reinforcing Bars			1858 LBS
CONCRETE, CLASS A			
Pour A			9.3 CYS
Pour B			3.0 CYS
Total Concrete, Class A			12.3 CYS
MISCELLANEOUS			
Surface Seal			5.9 SYS

INDIANA DEPARTMENT OF TRANSPORTATION

SIGN CANTILEVER STRUCTURE TYPE A & B FOUNDATION AT 33" CONCRETE BARRIER

SEPTEMBER 2022

STANDARD DRAWING NO. E 802-SCLS-14

DAVID H. BORUFF
REGISTERED
No. 60900348
STATE OF INDIANA
PROFESSIONAL ENGINEER

DESIGN STANDARDS ENGINEER — 05/17/22 DATE

CHIEF ENGINEER — 07/07/2022 DATE

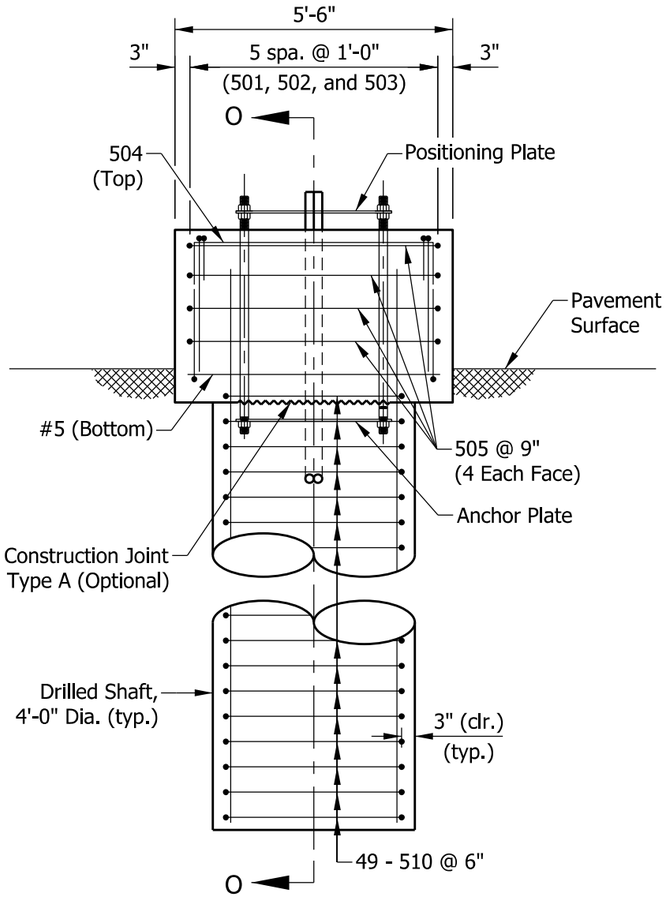

ELEVATION

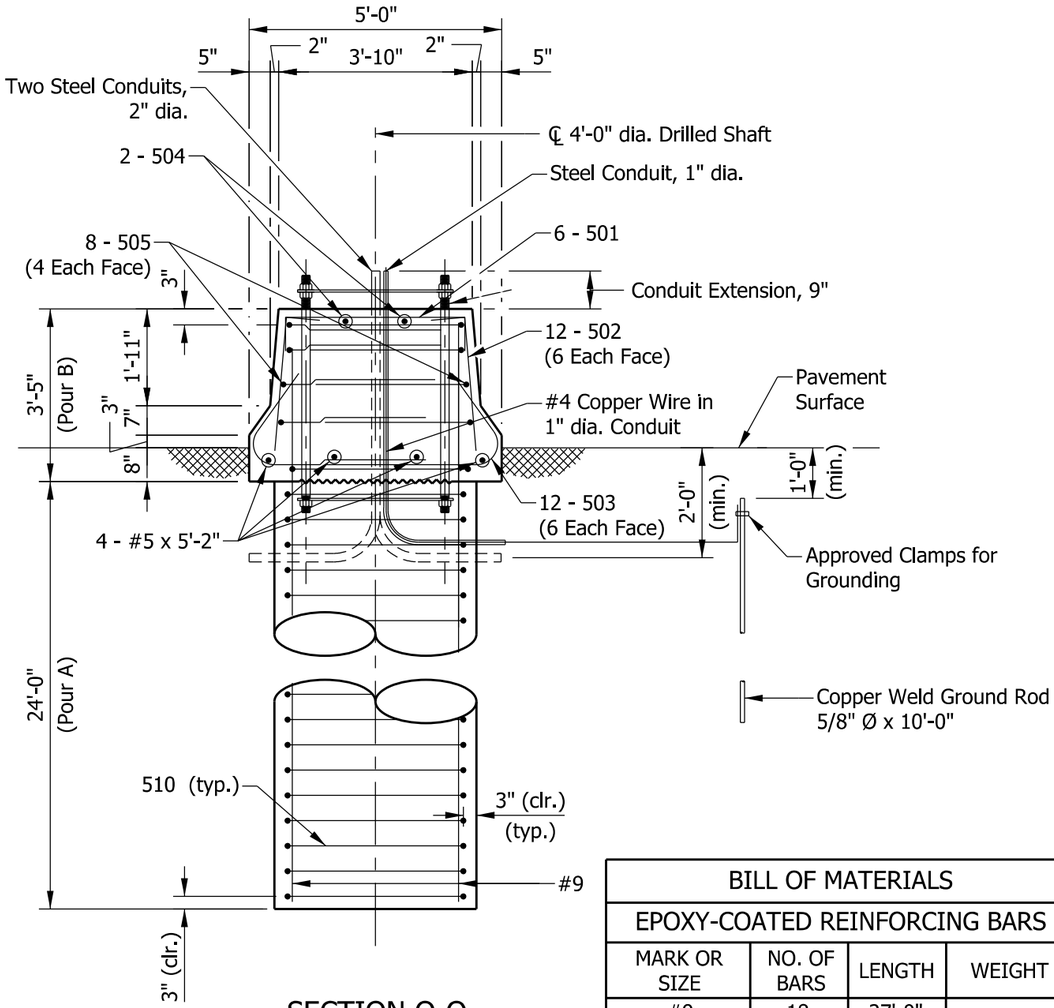

SECTION O-O

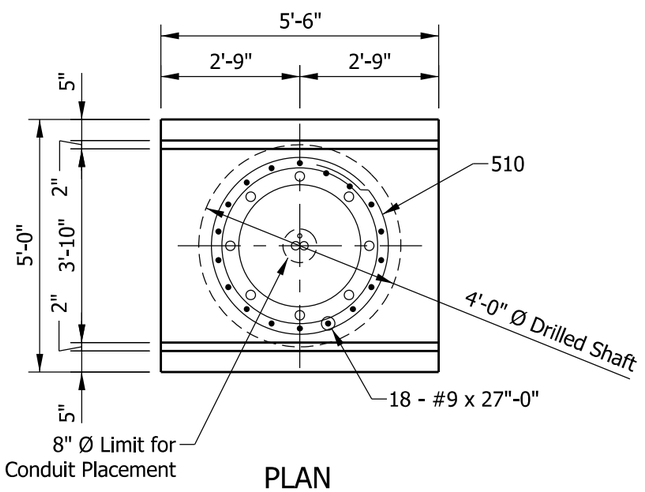

PLAN

NOTES:

1. See Standard Drawing E 602-CCMB-03 for barrier wall width transition.
2. See Standard Drawing E 802-SCLS-12 for anchor and positioning plate and anchor bolt details.
3. Both ends of steel conduit shall be threaded and capped.
4. Each tie shall be rotated 90 degrees from previous tie to stagger lap locations.
5. Top and sides of barrier railing to the pavement surface shall be sealed.
6. Minimum concrete Strength f'c=3500 psi.

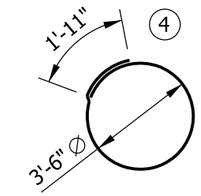

510 X 12'-11"

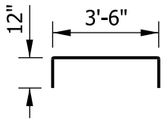

501 X 5'-6"

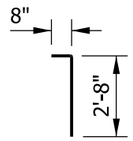

502 X 3'-4"

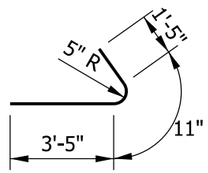

503 X 5'-9"

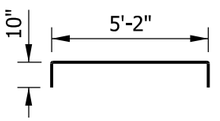

504 X 6'-10"

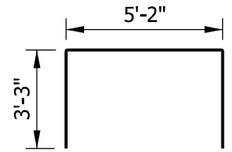

505 X 11'-8"

BILL OF MATERIALS			
EPOXY-COATED REINFORCING BARS			
MARK OR SIZE	NO. OF BARS	LENGTH	WEIGHT
#9	18	27'-0"	
Total #9			1652 LBS
501	6	5'-6"	
502	12	3'-4"	
503	12	5'-9"	
504	2	6'-10"	
505	8	11'-8"	
510	49	12'-11"	
#5	4	5'-2"	
Total #5			939 LBS
Total Epoxy-Coated Reinforcing Bars			2591 LBS
CONCRETE, CLASS A			
Pour A			11.2 CYS
Pour B			3.0 CYS
Total Concrete, Class A			14.2 CYS
MISCELLANEOUS			
Surface Seal			5.9 SYS

INDIANA DEPARTMENT OF TRANSPORTATION

SIGN CANTILEVER STRUCTURE TYPE C, D, & E
FOUNDATION AT 33" CONCRETE BARRIER

SEPTEMBER 2022

STANDARD DRAWING NO. E 802-SCLS-15

DAVID H. BORUFF
REGISTERED
No. 60900348
STATE OF INDIANA
PROFESSIONAL ENGINEER

David H Boruff 05/17/22
DESIGN STANDARDS ENGINEER DATE

07/07/2022
CHIEF ENGINEER DATE

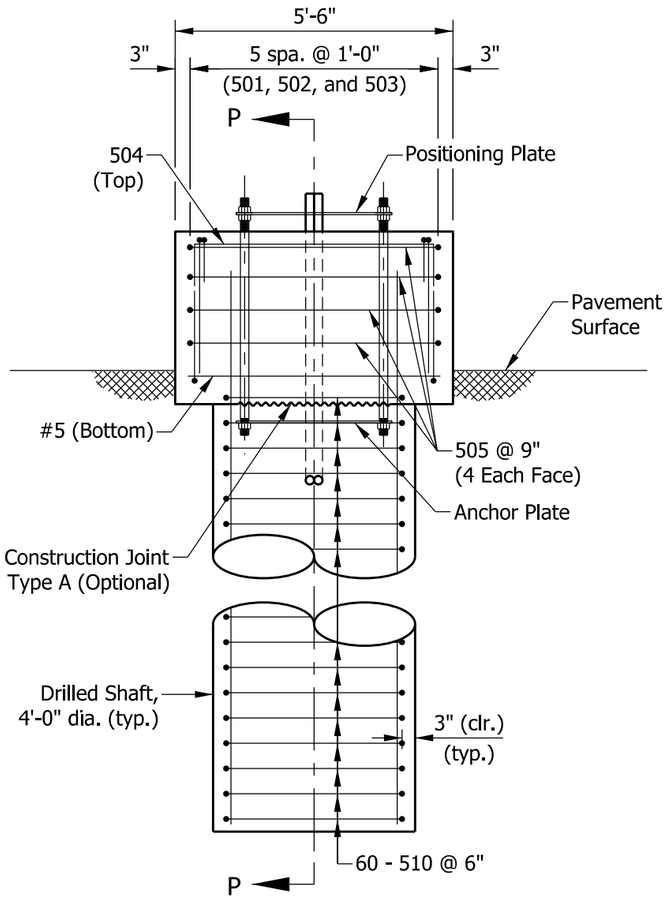

ELEVATION

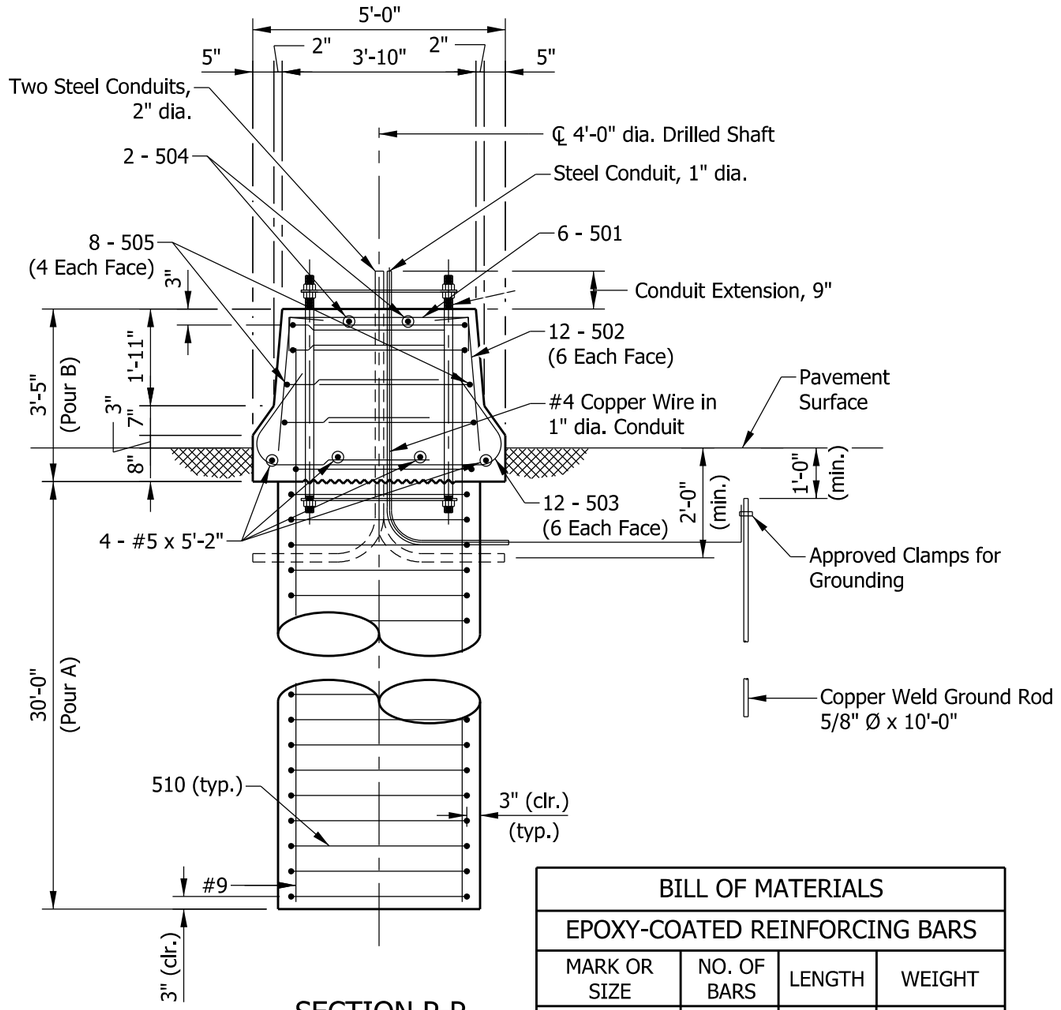

SECTION P-P

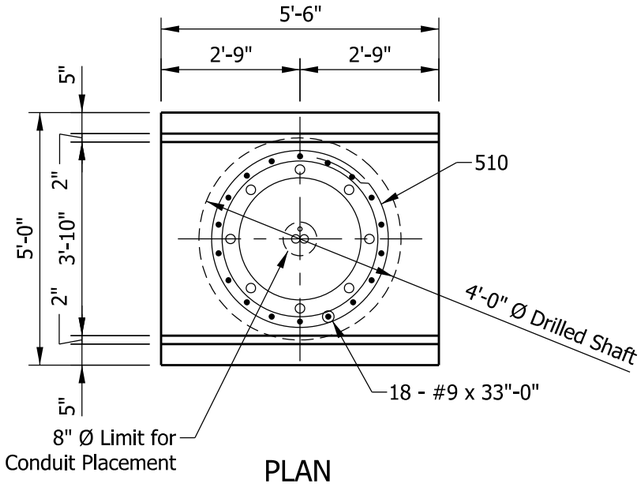

PLAN

NOTES:

1. See Standard Drawing E 602-CCMB-03 for barrier wall width transition.
2. See Standard Drawing E 802-SCLS-12 for anchor and positioning plate and anchor bolt details.
3. Both ends of steel conduit shall be capped.
4. Each tie shall be rotated 90 degrees from previous tie to stagger lap locations.
5. Top and sides of barrier railing to the pavement surface shall be sealed.
6. Minimum concrete strength f'c=3500 psi.

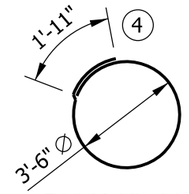

510 X 12'-11"

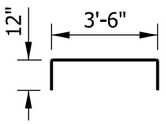

501 X 5'-6"

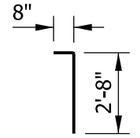

502 X 3'-4"

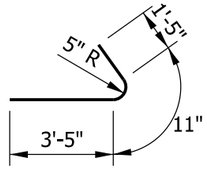

503 X 5'-9"

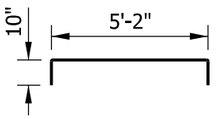

504 X 6'-10"

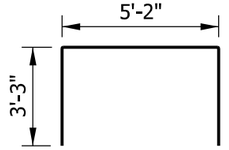

505 X 11'-8"

BILL OF MATERIALS			
EPOXY-COATED REINFORCING BARS			
MARK OR SIZE	NO. OF BARS	LENGTH	WEIGHT
#9	18	33'-0"	
Total #9			2020 LBS
501	6	5'-6"	
502	12	3'-4"	
503	12	5'-9"	
504	2	6'-10"	
505	8	11'-8"	
510	60	12'-11"	
#5	4	5'-2"	
Total #5			1086 LBS
Total Epoxy-Coated Reinforcing Bars			3106 LBS
CONCRETE, CLASS A			
Pour A			14.0 CYS
Pour B			3.0 CYS
Total Concrete, Class A			17.0 CYS
MISCELLANEOUS			
Surface Seal			5.9 SYS

INDIANA DEPARTMENT OF TRANSPORTATION

SIGN CANTILEVER STRUCTURE TYPE F, G, H, & I FOUNDATION AT 33" CONCRETE BARRIER

SEPTEMBER 2022

STANDARD DRAWING NO. E 802-SCLS-16

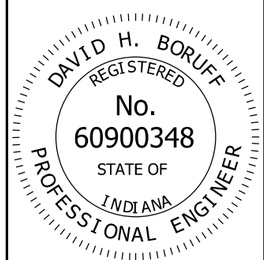

David H Boruff 05/17/22
DESIGN STANDARDS ENGINEER DATE

07/07/2022
CHIEF ENGINEER DATE

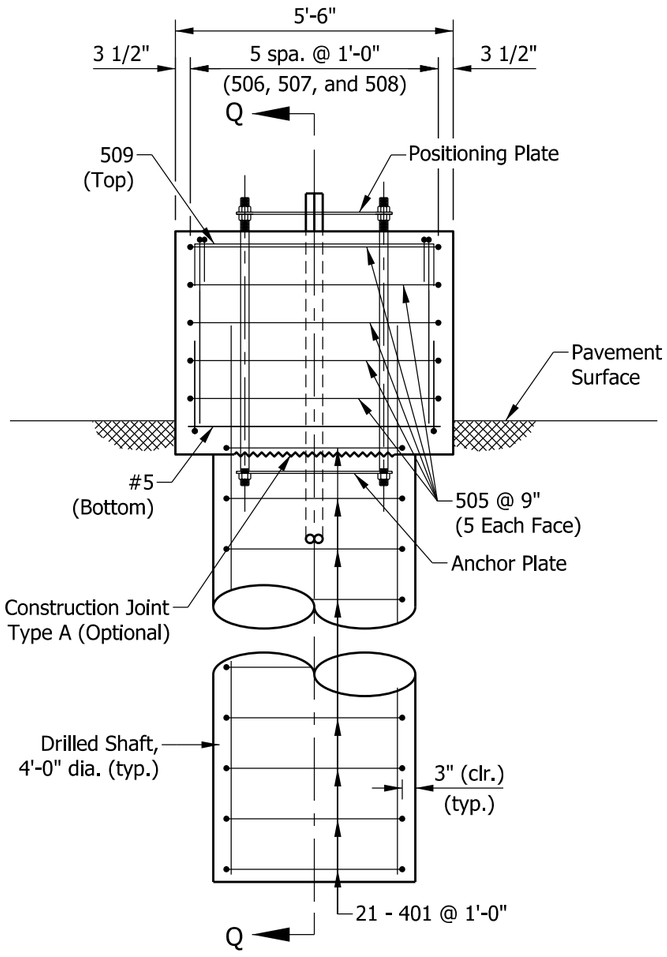

ELEVATION

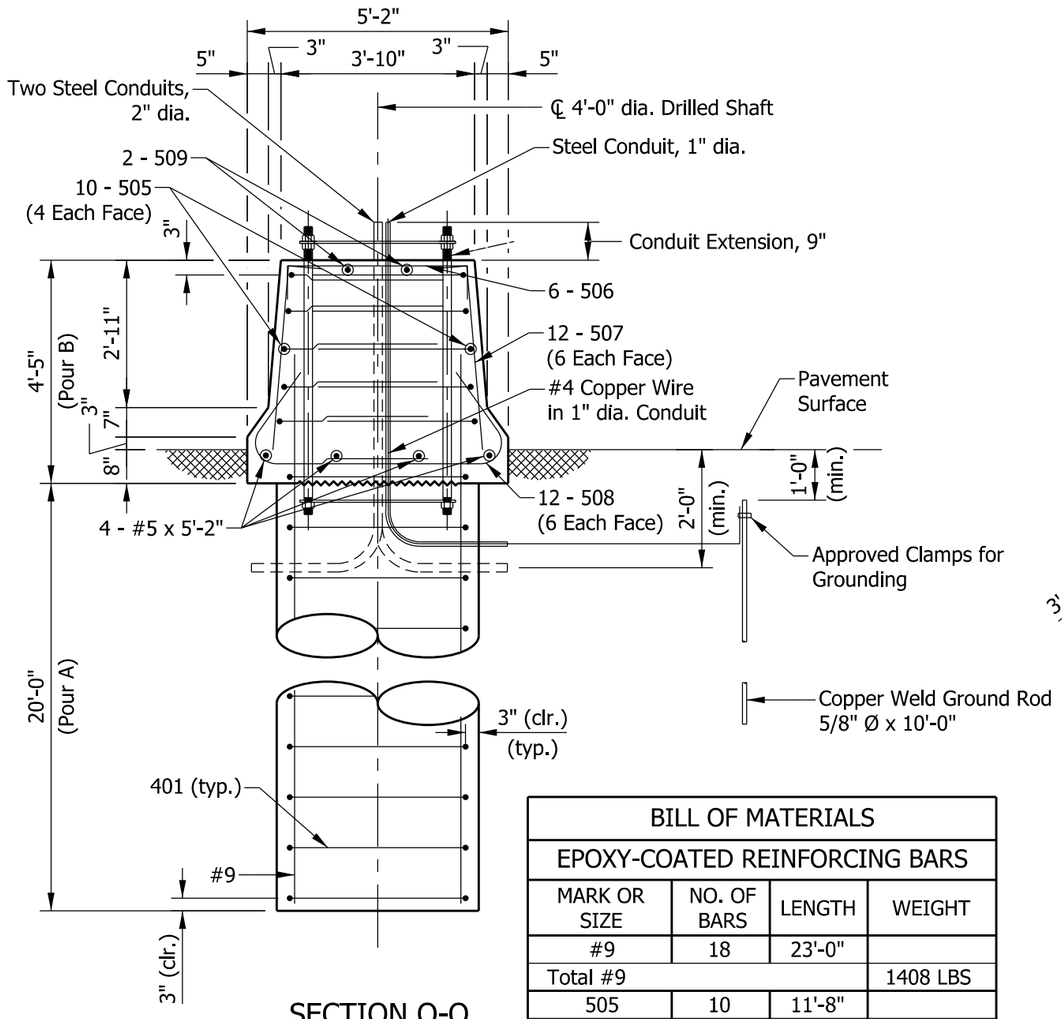

SECTION Q-Q

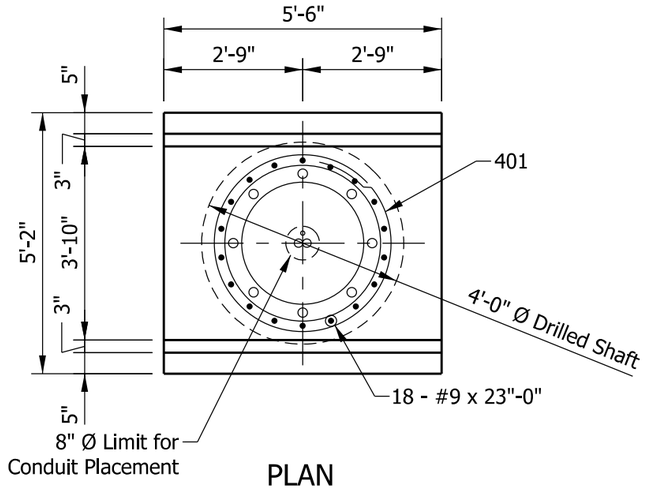

PLAN

BILL OF MATERIALS			
EPOXY-COATED REINFORCING BARS			
MARK OR SIZE	NO. OF BARS	LENGTH	WEIGHT
#9	18	23'-0"	
Total #9			1408 LBS
505	10	11'-8"	
506	6	5'-8"	
507	12	4'-4"	
508	12	5'-11"	
509	2	7'-0"	
#5	4	5'-2"	
Total #5			321 LBS
401	21	12'-0"	
Total #4			169 LBS
Total Epoxy-Coated Reinforcing Bars			1898 LBS
CONCRETE, CLASS A			
Pour A			9.3 CYS
Pour B			4.0 CYS
Total Concrete, Class A			13.3 CYS
MISCELLANEOUS			
Surface Seal			7.1 SYS

NOTES:

1. See Standard Drawing E 602-CCMB-03 for barrier wall width transition.
2. See Standard Drawing E 802-SCLS-12 for anchor and positioning plate and anchor bolt details.
3. Both ends of steel conduit shall be threaded and capped.
4. Each tie shall be rotated 90 degrees from previous tie to stagger lap locations.
5. Top and sides of barrier railing to the pavement surface shall be sealed.
6. Minimum concrete Strength f'c=3500 psi.

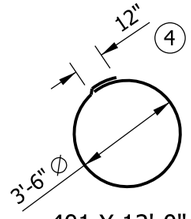

401 X 12'-0"

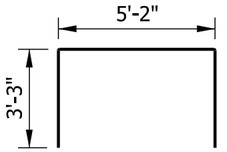

505 X 11'-8"

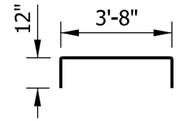

506 X 5'-8"

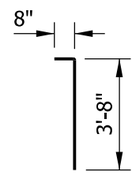

507 X 4'-4"

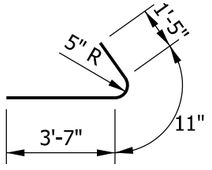

508 X 5'-11"

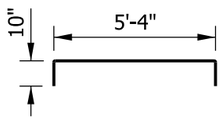

509 X 7'-0"

INDIANA DEPARTMENT OF TRANSPORTATION

SIGN CANTILEVER STRUCTURE TYPE A & B
FOUNDATION AT 45" CONCRETE BARRIER

SEPTEMBER 2022

STANDARD DRAWING NO. E 802-SCLS-17

DAVID H. BORUFF
REGISTERED
No. 60900348
STATE OF INDIANA
PROFESSIONAL ENGINEER

David H Boruff 05/17/22
DESIGN STANDARDS ENGINEER DATE

07/07/2022
CHIEF ENGINEER DATE

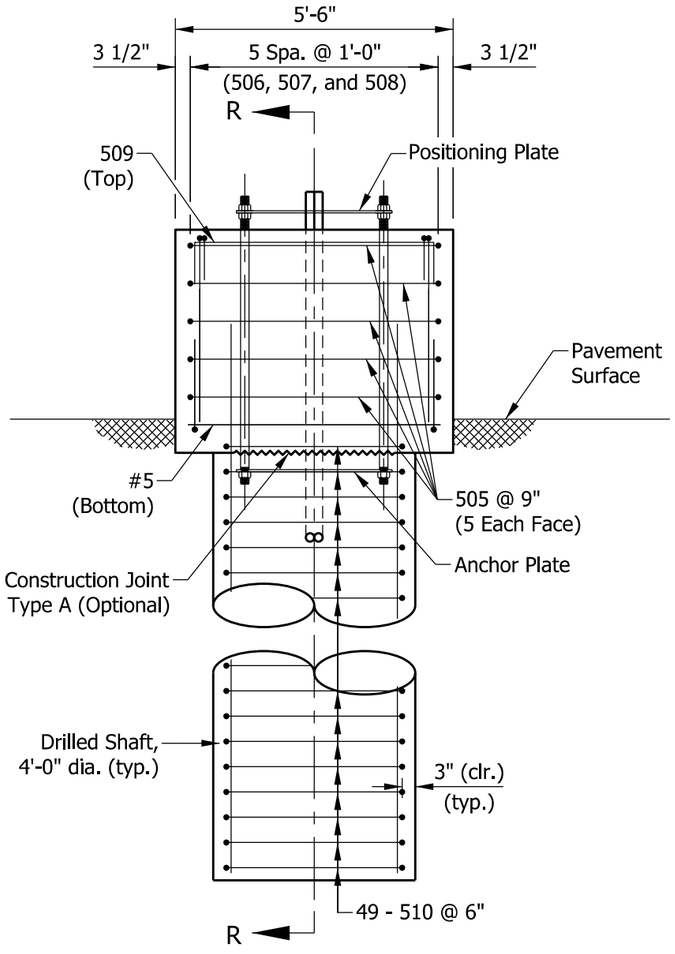

ELEVATION

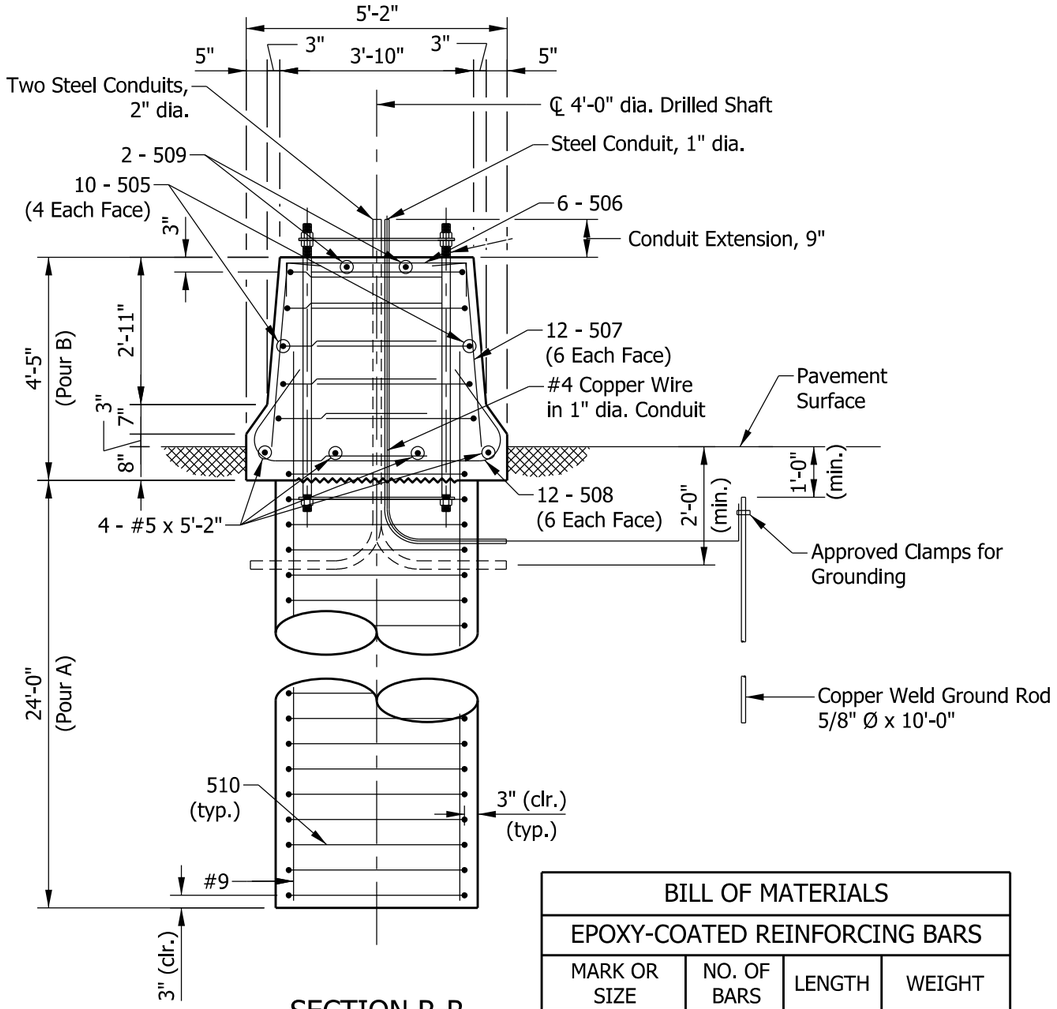

SECTION R-R

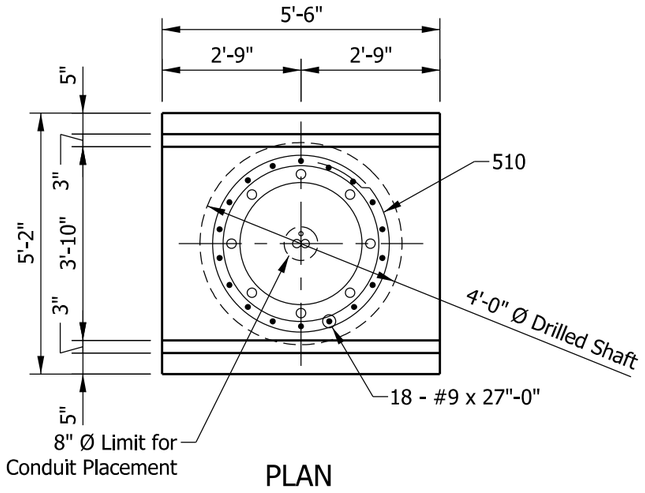

PLAN

NOTES:

1. See Standard Drawing E 602-CCMB-03 for barrier wall width transition.
2. See Standard Drawing E 802-SCLS-12 for anchor and positioning plate and anchor bolt details.
3. Both ends of steel conduit shall be threaded and capped.
4. Each tie shall be rotated 90 degrees from previous tie to stagger lap locations.
5. Top and sides of barrier railing to the pavement surface shall be sealed.
6. Minimum concrete Strength f'c=3500 psi.

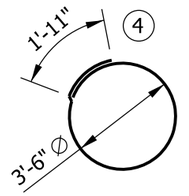

510 X 12'-11"

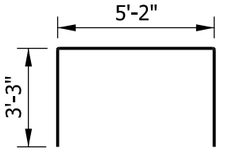

505 X 11'-8"

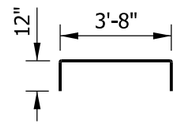

506 X 5'-8"

507 X 4'-4"

508 X 5'-11"

509 X 7'-0"

BILL OF MATERIALS			
EPOXY-COATED REINFORCING BARS			
MARK OR SIZE	NO. OF BARS	LENGTH	WEIGHT
#9	18	27'-0"	
Total #9			1652 LBS
505	10	11'-8"	
506	6	5'-8"	
507	12	4'-4"	
508	12	5'-11"	
509	2	7'-0"	
510	49	12'-11"	
#5	4	5'-2"	
Total #5			979 LBS
Total Epoxy-Coated Reinforcing Bars			2631 LBS
CONCRETE, CLASS A			
Pour A			11.2 CYS
Pour B			4.0 CYS
Total Concrete, Class A			15.2 CYS
MISCELLANEOUS			
Surface Seal			7.1 SYS

INDIANA DEPARTMENT OF TRANSPORTATION

SIGN CANTILEVER STRUCTURE TYPE C, D, & E FOUNDATION AT 45" CONCRETE BARRIER

SEPTEMBER 2022

STANDARD DRAWING NO. E 802-SCLS-18

DAVID H. BORUFF REGISTERED No. 60900348 STATE OF INDIANA PROFESSIONAL ENGINEER

David H Boruff 05/17/22
DESIGN STANDARDS ENGINEER DATE

07/07/2022
CHIEF ENGINEER DATE

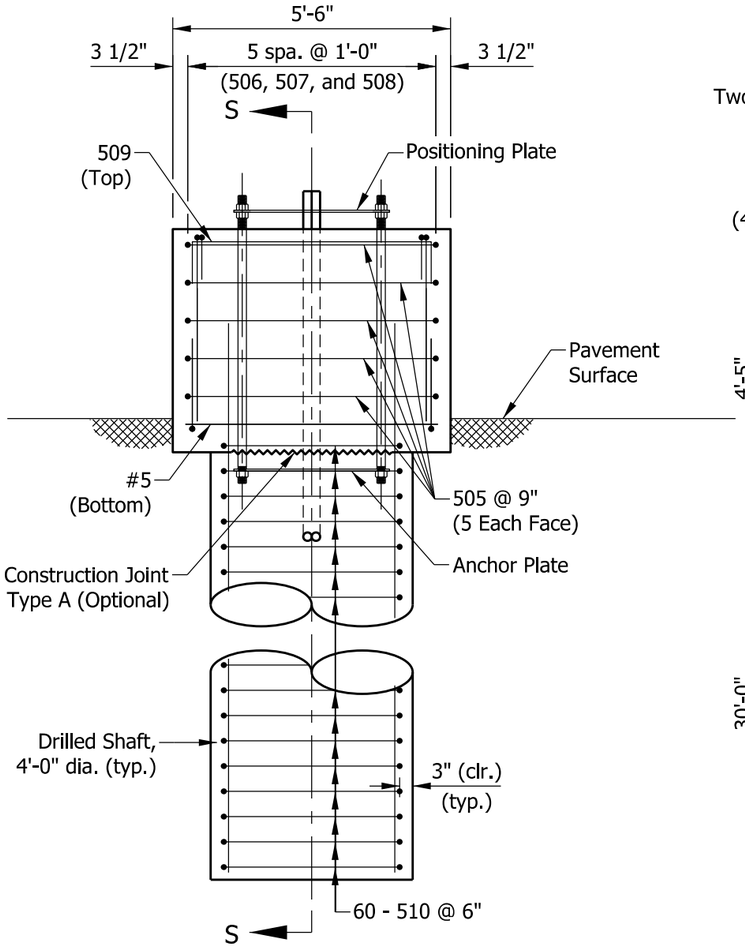

ELEVATION

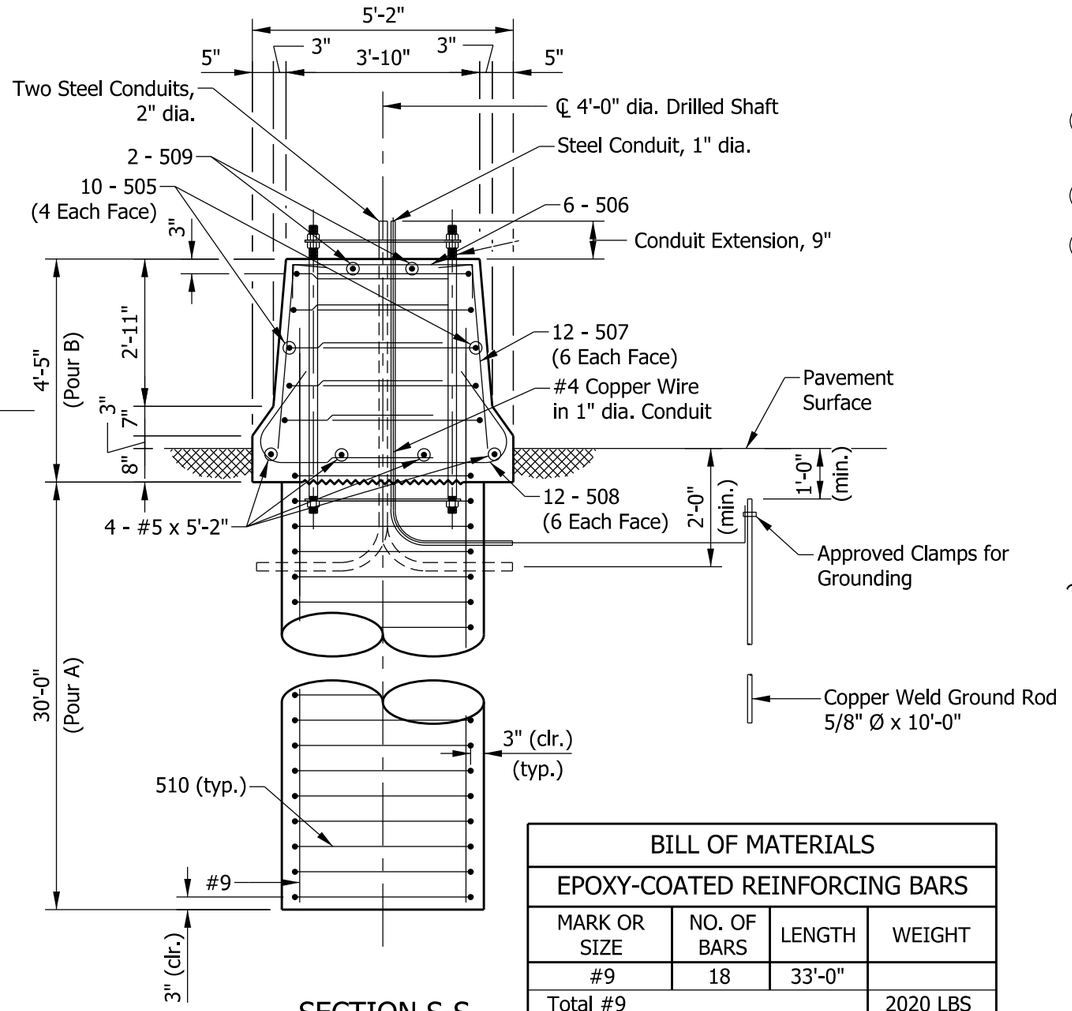

SECTION S-S

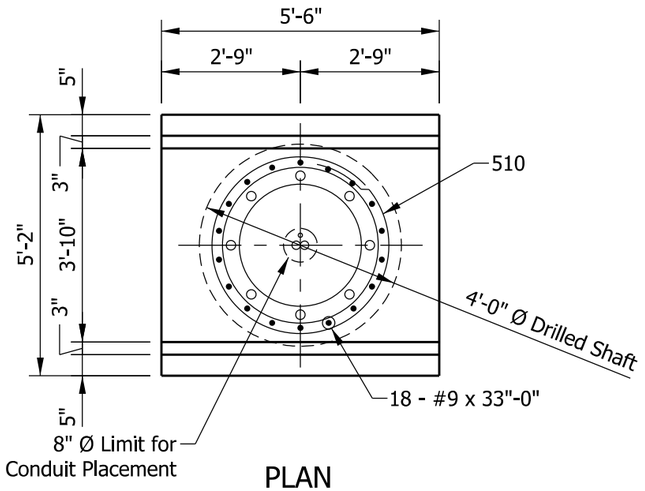

PLAN

NOTES:

1. See Standard Drawing E 602-CCMB-03 for barrier wall width transition.
2. See Standard Drawing E 802-SCLS-12 for anchor and positioning plate and anchor bolt details.
3. Both ends of steel conduit shall be threaded and capped.
4. Each tie shall be rotated 90 degrees from previous tie to stagger lap locations.
5. Top and sides of barrier railing to the pavement surface shall be sealed.
6. Minimum concrete Strength f'c=3500 psi.

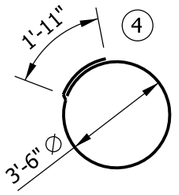

510 X 12'-11"

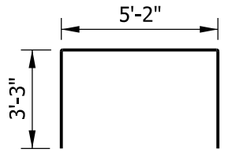

505 X 11'-8"

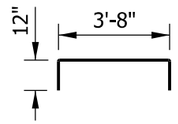

506 X 5'-8"

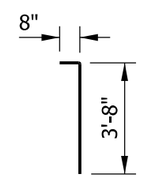

507 X 4'-4"

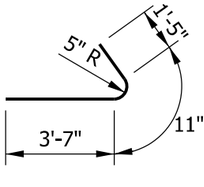

508 X 5'-11"

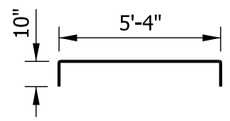

509 X 7'-0"

BILL OF MATERIALS			
EPOXY-COATED REINFORCING BARS			
MARK OR SIZE	NO. OF BARS	LENGTH	WEIGHT
#9	18	33'-0"	
Total #9			2020 LBS
505	10	11'-8"	
506	6	5'-8"	
507	12	4'-4"	
508	12	5'-11"	
509	2	7'-0"	
510	60	12'-11"	
#5	4	5'-2"	
Total #5			1127 LBS
Total Epoxy-Coated Reinforcing Bars			3147 LBS
CONCRETE, CLASS A			
Pour A			13.9 CYS
Pour B			4.0 CYS
Total Concrete, Class A			17.9 CYS
MISCELLANEOUS			
Surface Seal			7.1 SYS

INDIANA DEPARTMENT OF TRANSPORTATION

SIGN CANTILEVER STRUCTURE TYPE F, G, H, & I FOUNDATION AT 45" CONCRETE BARRIER

SEPTEMBER 2022

STANDARD DRAWING NO. E 802-SCLS-19

DAVID H. BORUFF
REGISTERED
No. 60900348
STATE OF INDIANA
PROFESSIONAL ENGINEER

David H Boruff 05/17/22
DESIGN STANDARDS ENGINEER DATE

07/07/2022
CHIEF ENGINEER DATE

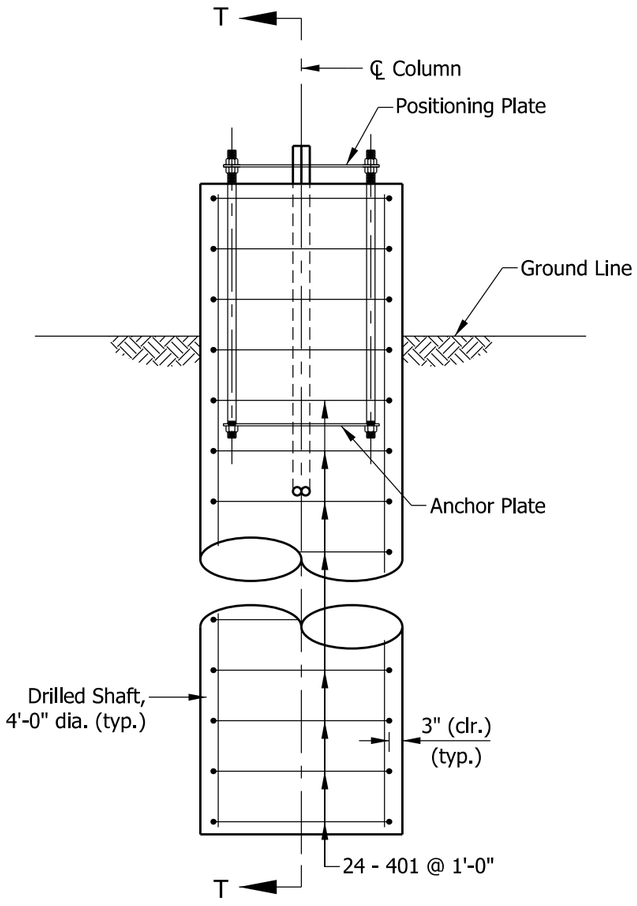

ELEVATION

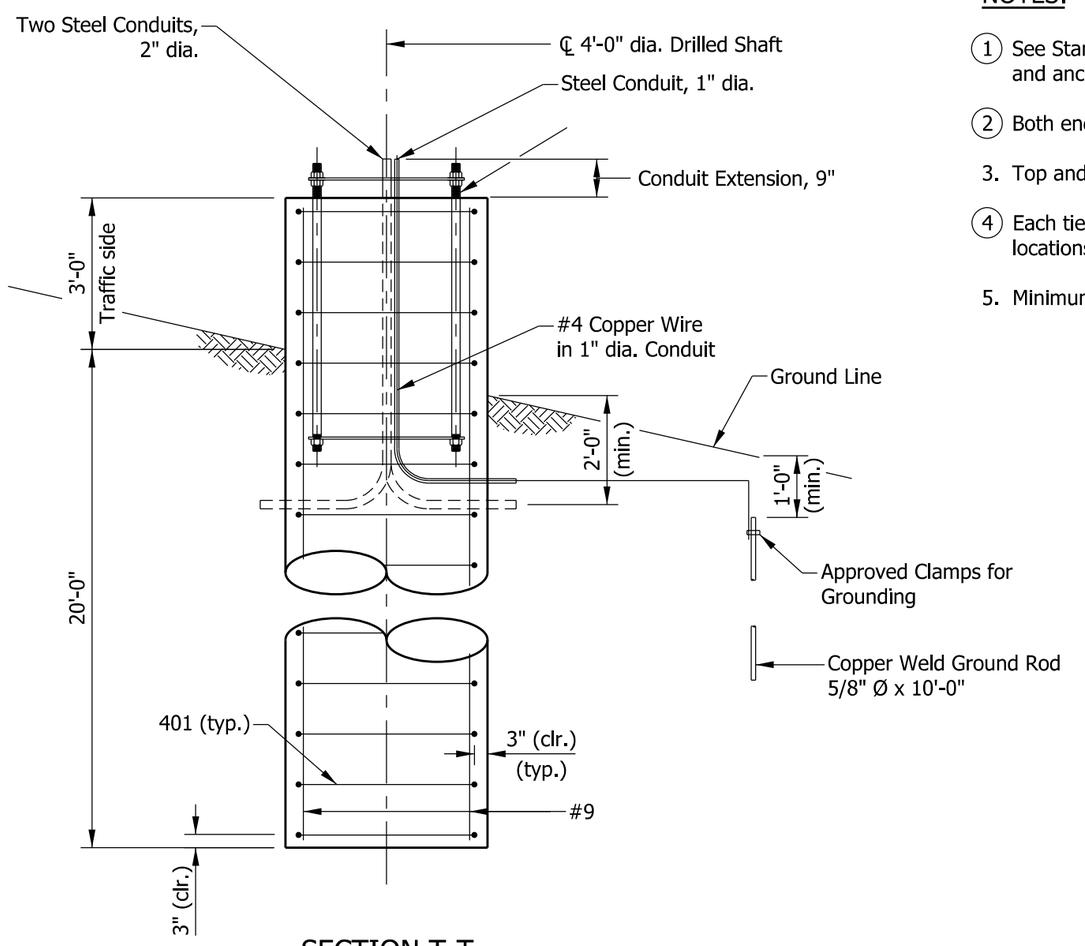

SECTION T-T

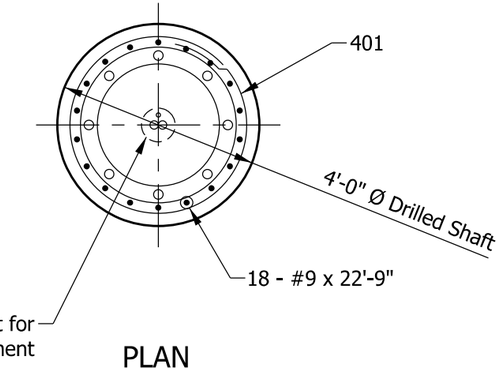

PLAN

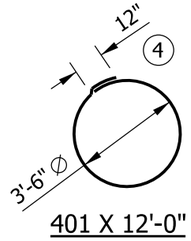

401 X 12'-0"

NOTES:

1. See Standard Drawing E 802-SCLS-12 for anchor and positioning plate and anchor bolt details.
2. Both ends of steel conduit shall be threaded and capped.
3. Top and sides of foundation to the ground surface shall be sealed.
4. Each tie shall be rotated 90 degrees from previous tie to stagger lap locations.
5. Minimum concrete strength f'c=3500 psi.

BILL OF MATERIALS			
EPOXY-COATED REINFORCING BARS			
MARK OR SIZE	NO. OF BARS	LENGTH	WEIGHT
#9	18	22'-9"	
Total #9			1392 LBS
401	24	12'-0"	
Total #4			193 LBS
Total Epoxy-Coated Reinforcing Bars			1585 LBS
MISCELLANEOUS			
Concrete, Class A			10.7 CYS
Surface Seal			4.3 SYS

INDIANA DEPARTMENT OF TRANSPORTATION

SIGN CANTILEVER STRUCTURE TYPE A & B
FOUNDATION, 36" HEIGHT

SEPTEMBER 2022

STANDARD DRAWING NO. E 802-SCLS-20

DAVID H. BORUFF
REGISTERED
No. 60900348
STATE OF INDIANA
PROFESSIONAL ENGINEER

David H Boruff 05/17/22
DESIGN STANDARDS ENGINEER DATE

07/07/2022
CHIEF ENGINEER DATE

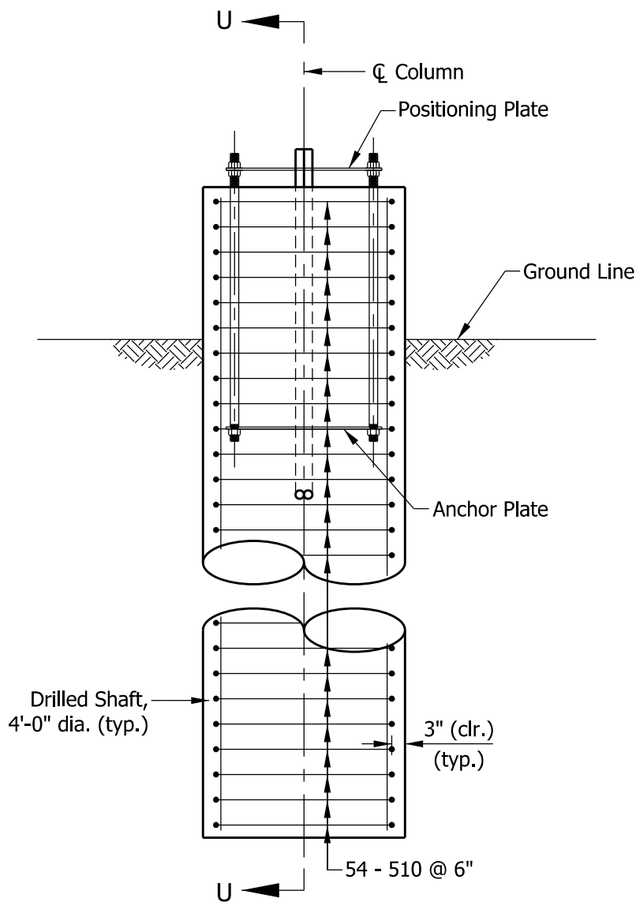

ELEVATION

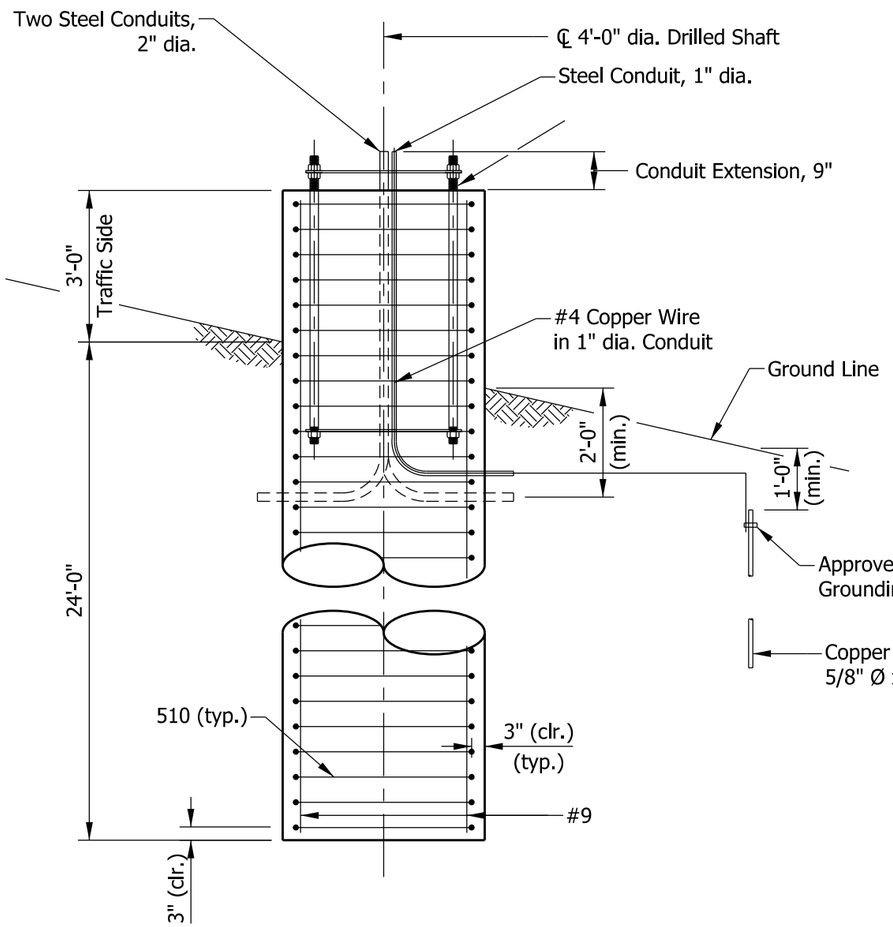

SECTION U-U

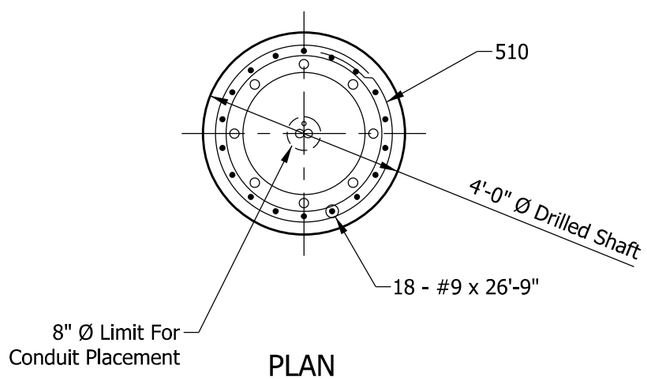

PLAN

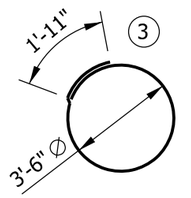

510 X 12'-11"

NOTES:

1. See Standard Drawing E 802-SCLS-12 for anchor and positioning plate and anchor bolt details.
2. Both ends of steel conduit shall be threaded and capped.
3. Each tie shall be rotated 90 degrees from previous tie to stagger lap locations.
4. Top and sides of barrier railing to the pavement surface shall be sealed.
5. Minimum concrete Strength f'c=3500 psi.

BILL OF MATERIALS			
EPOXY-COATED REINFORCING BARS			
MARK OR SIZE	NO. OF BARS	LENGTH	WEIGHT
#9	18	26'-9"	
Total #9			1637 LBS
510	54	12'-11"	
Total #5			725 LBS
Total Epoxy-Coated Reinforcing Bars			2362 LBS
MISCELLANEOUS			
Concrete, Class A			12.6 CYS
Surface Seal			4.3 SYS

INDIANA DEPARTMENT OF TRANSPORTATION

SIGN CANTILEVER STRUCTURE TYPE C, D, & E FOUNDATION, 36" HEIGHT

SEPTEMBER 2022

STANDARD DRAWING NO. E 802-SCLS-21

DAVID H. BORUFF
REGISTERED
No. 60900348
STATE OF INDIANA
PROFESSIONAL ENGINEER

David H Boruff 05/17/22
DESIGN STANDARDS ENGINEER DATE

07/07/2022
CHIEF ENGINEER DATE

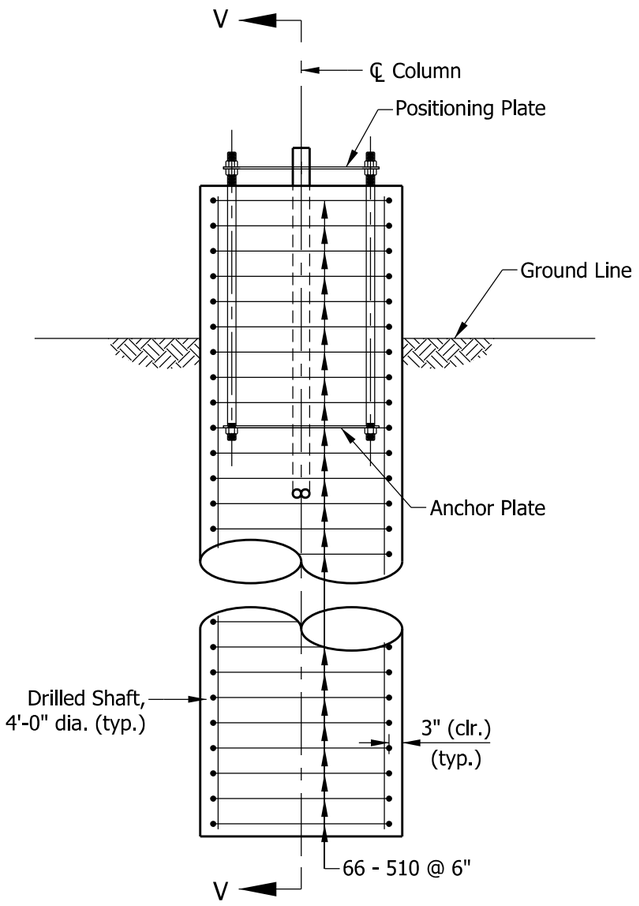

ELEVATION

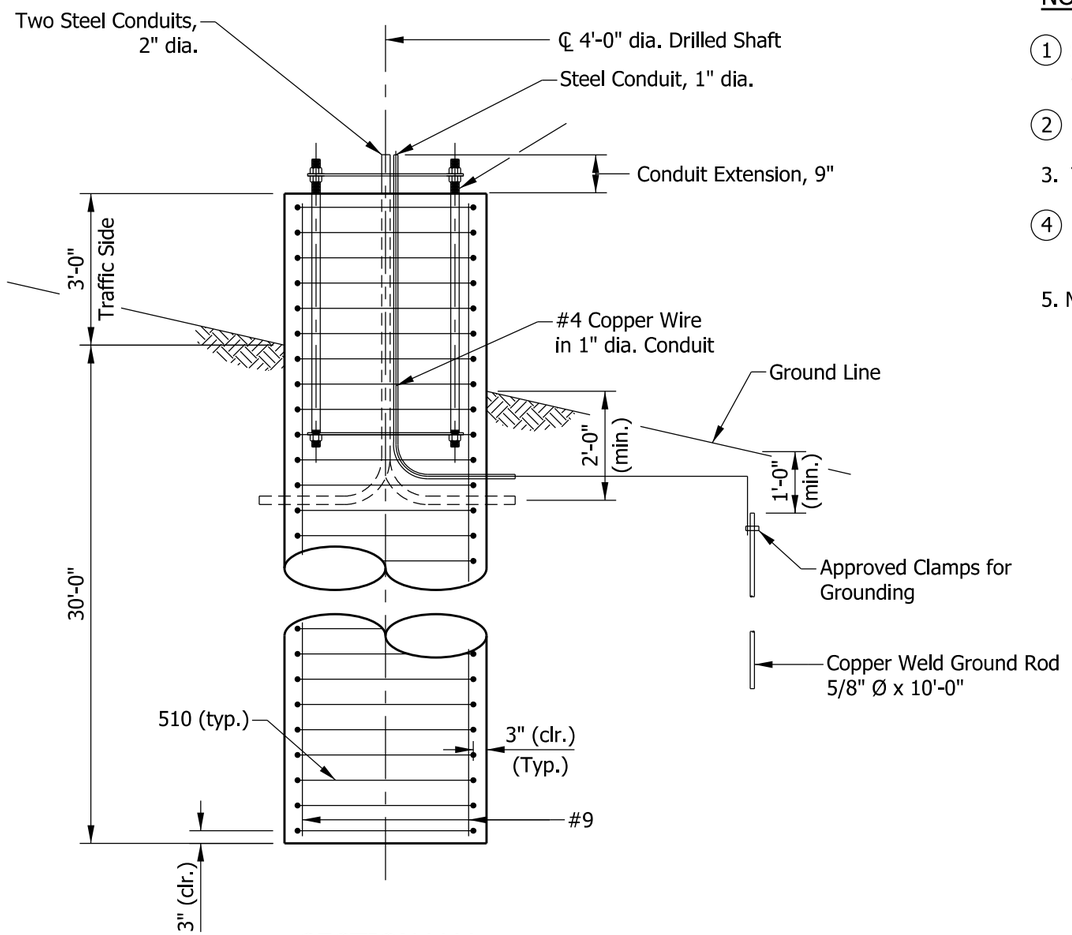

SECTION V-V

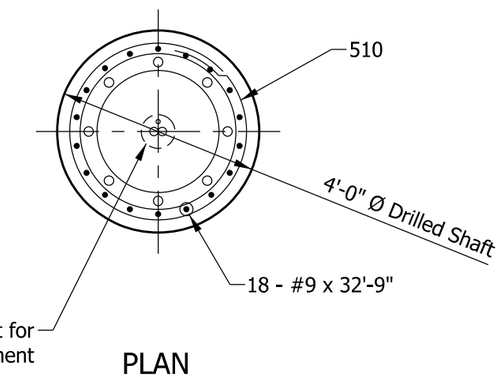

PLAN

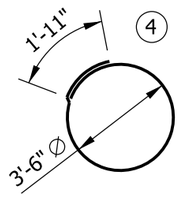

510 X 12'-11"

NOTES:

1. See Standard Drawing E 802-SCLS-12 for anchor and positioning plate and anchor bolt details.
2. Both ends of steel conduit shall be threaded and capped.
3. Top and sides of foundation to the ground surface shall be sealed.
4. Each tie shall be rotated 90 degrees from previous tie to stagger lap locations.
5. Minimum concrete Strength f'c=3500 psi.

BILL OF MATERIALS			
EPOXY-COATED REINFORCING BARS			
MARK OR SIZE	NO. OF BARS	LENGTH	WEIGHT
#9	18	32'-9"	
Total #9			2004 LBS
510	66	12'-11"	
Total #5			887 LBS
Total Epoxy-Coated Reinforcing Bars			2891 LBS
MISCELLANEOUS			
Concrete, Class A			15.4 CYS
Surface Seal			4.3 SYS

INDIANA DEPARTMENT OF TRANSPORTATION

SIGN CANTILEVER STRUCTURE TYPE F, G, H, & I FOUNDATION, 36" HEIGHT

SEPTEMBER 2022

STANDARD DRAWING NO. E 802-SCLS-22

DAVID H. BORUFF REGISTERED No. 60900348 STATE OF INDIANA PROFESSIONAL ENGINEER

David H Boruff 05/17/22
DESIGN STANDARDS ENGINEER DATE

07/07/2022
CHIEF ENGINEER DATE

INDEX	
SHEET NO.	SUBJECT
1	Drawing Index
2	Plan, Elevation, Member Sizes, and Camber
3	Quadri-Chord and Flange Details
4	Upper Chords Connection Details
5	Lower Chords Connection and Wire Outlet Details
6	Base Plate, Anchor Bolt, and Metal Skirt Details
7	Handhole and I.D. Tag Details
8	Foundation at 33" Concrete Barrier
9	Foundation at 45" Concrete Barrier

INDIANA DEPARTMENT OF TRANSPORTATION

SIGN CANTILEVER STRUCTURE BUTTERFLY
DRAWING INDEX

SEPTEMBER 2014

STANDARD DRAWING NO. E 802-SCSB-01

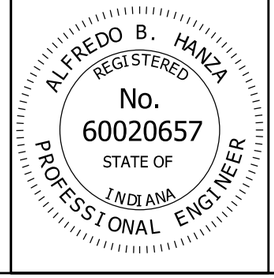

/s/ Alfredo B. Hanza *09/20/13*
DESIGN STANDARDS ENGINEER DATE

/s/ Mark A. Miller *09/26/13*
CHIEF ENGINEER DATE

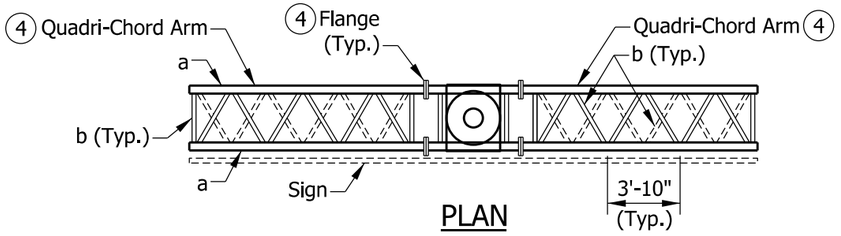

PLAN

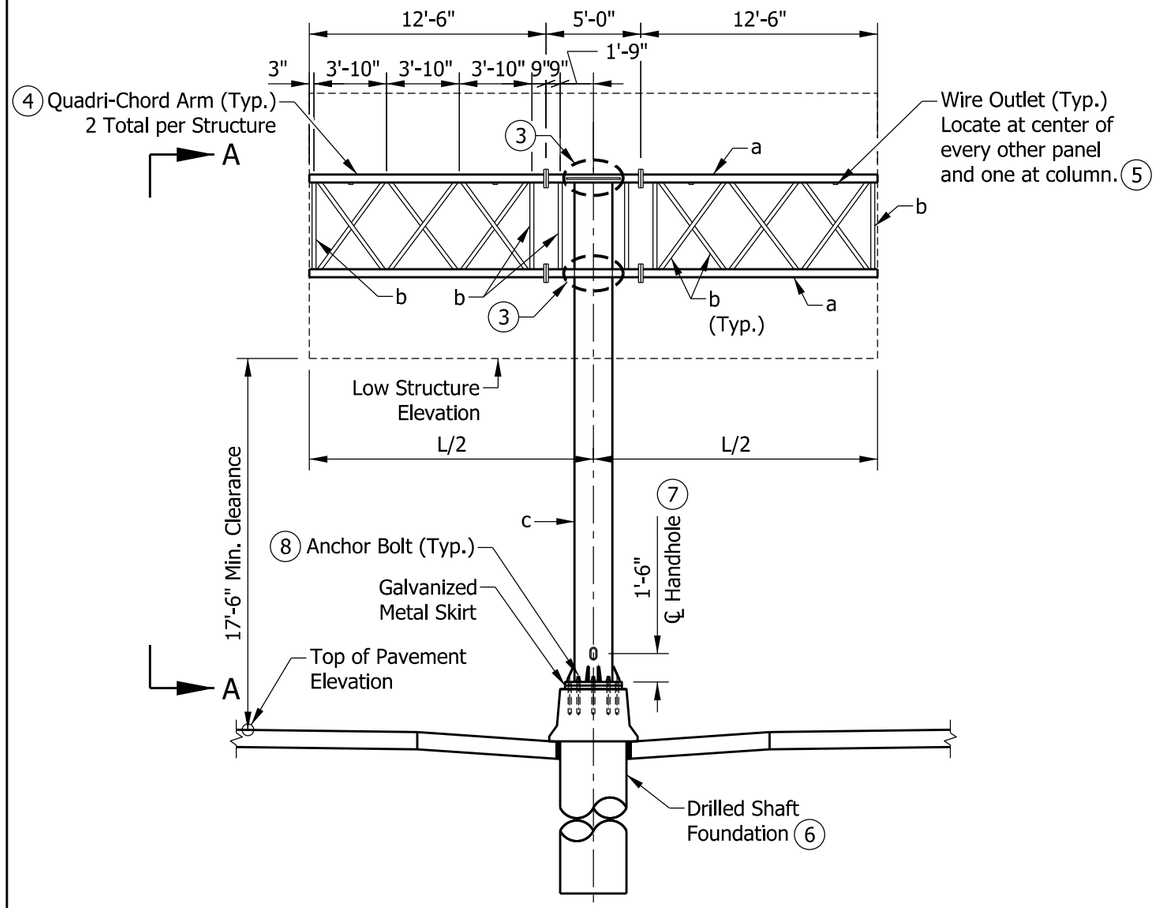

ELEVATION

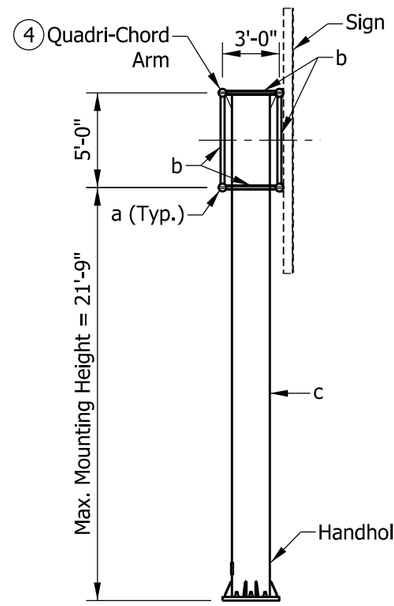

SIDE ELEVATION A-A

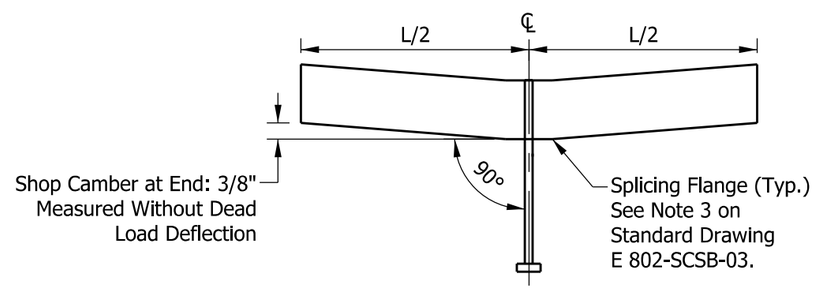

CAMBER DIAGRAM

MEMBER SIZES							
MAX SPAN L/2 (FT)	MAX SIGN AREA (SF)	CHORD a		VERT./HORIZ./DIAG. b		COLUMN c	
		O.D. (IN.)	WALL THICK. (IN.)	O.D. (IN.)	WALL THICK. (IN.)	O.D. (IN.)	WALL THICK. (IN.)
15	400	5.563	0.375	2.875	0.276	24.000	0.688

NOTES:

1. Maximum deviation of any chord from a straight line shall be 1/8".
2. All butterfly structure members are steel.
3. See Standard Drawings E 802-SCSB-04 and -05 for upper and lower chord connection details.
4. See Standard Drawing E 802-SCSB-03 for quadri-chord and flange details.
5. See Standard Drawing E 802-SCSB-05 for wire outlet detail.
6. See Standard Drawings E 802-SCSB-08 and -09 for foundation details.
7. See Standard Drawing E 802-SCSB-07 for handhole and I.D. tag details.
8. See Standard Drawing E 802-SCSB-06 for base plate, anchor bolt, and metal skirt details.

LEGEND:

a - Chord Member

b - Interior Member
Verticals and Vertical Diagonals in Front and Back Faces, and Horizontals and Horizontal Diagonals in Top and Bottom Faces of Quadri-Chord Arm

c - Column

INDIANA DEPARTMENT OF TRANSPORTATION

SIGN CANTILEVER STRUCTURE BUTTERFLY PLAN, ELEVATION, MEMBER SIZE, AND CAMBER

SEPTEMBER 2014

STANDARD DRAWING NO. E 802-SCSB-02

ALFREDO B. HANZA
REGISTERED
No. 60020657
STATE OF INDIANA
PROFESSIONAL ENGINEER

/s/ Alfredo B. Hanza 09/20/13
DESIGN STANDARDS ENGINEER DATE

/s/ Mark A. Miller 09/26/13
CHIEF ENGINEER DATE

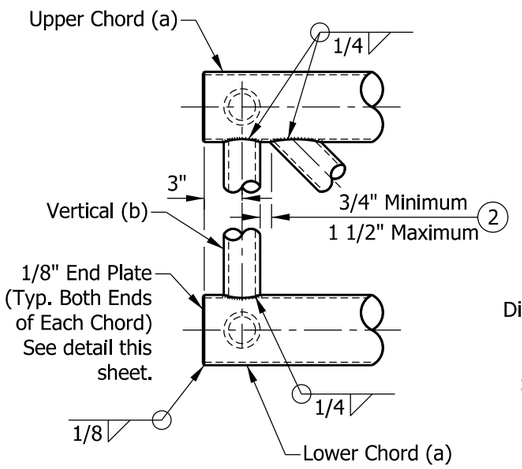

DETAIL A

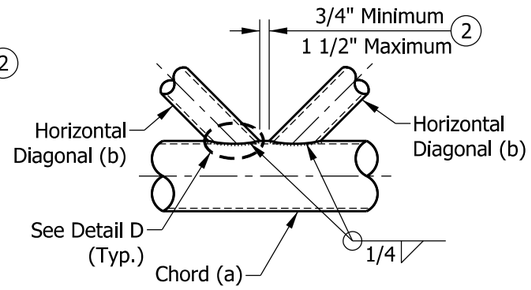

DETAIL B

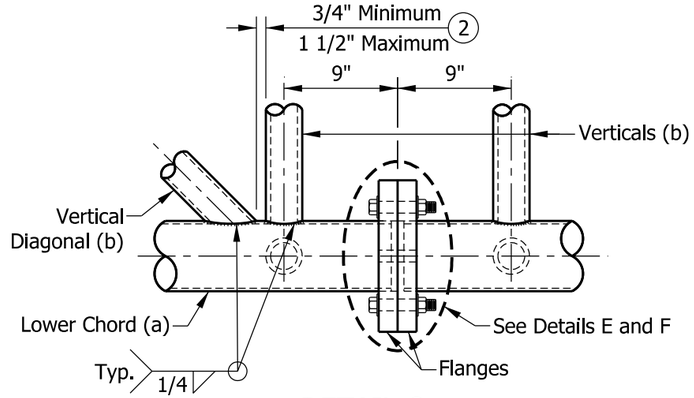

DETAIL C

NOTES:

(1) See Standard Drawings E 802-SCSB-04 and -05 for upper and lower chords connection details.

(2) Diagonals shall be detailed for minimum offset from the panel point based on the following: Offset shall be such as to provide a 3/4" minimum to 1 1/2" maximum clearance between any diagonal and any vertical member, and to provide clearance for U-bolt connections of signs.

3. Splicing flanges shall be attached to each arm unit with the arm shop-assembled to camber shown. Arm units shall be in proper alignment and flange surfaces shall be shop-bolted into full contact before welding. Sufficient external welds or tacks shall be made to secure flanges until remaining welds are made after disassembly. Adjacent flanges shall be "match marked" to insure proper field assembly.

(4) Toe edge of diagonal member shall be cut back to facilitate throat thickness per AWS D1.1, Figure 3.2.

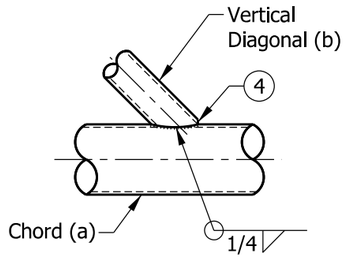

DETAIL D

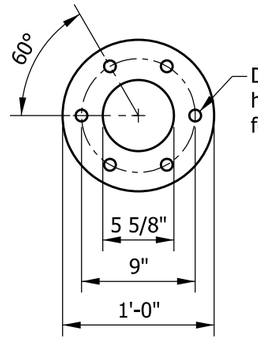

FLANGE
DETAIL E

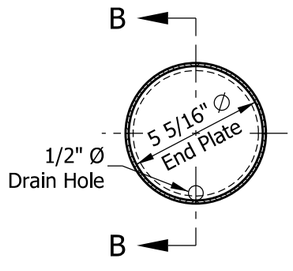

END VIEW SECTION B-B

CHORD END PLATE DETAIL

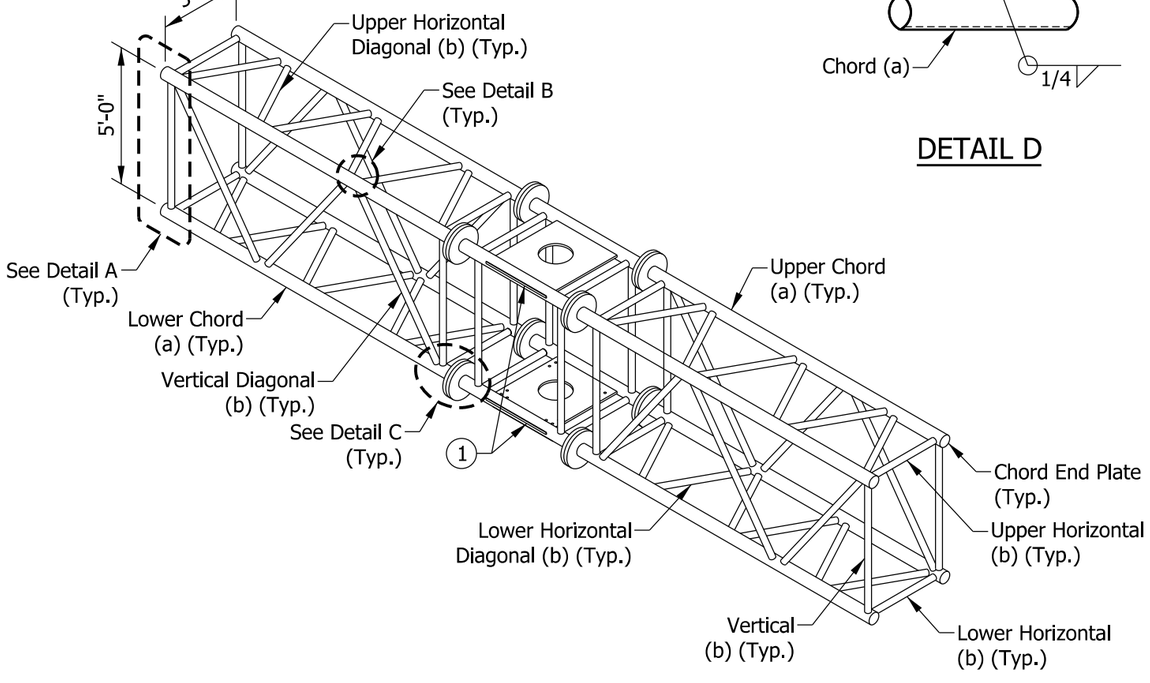

TYPICAL QUADRI-CHORD ARM PAIR

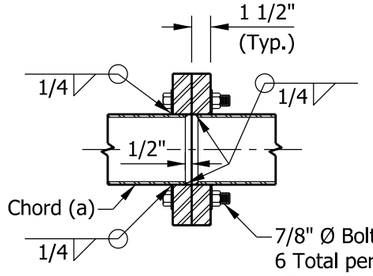

FLANGE
DETAIL F

INDIANA DEPARTMENT OF TRANSPORTATION

SIGN CANTILEVER STRUCTURE BUTTERFLY
QUADRI-CHORD AND FLANGE DETAILS

SEPTEMBER 2014

STANDARD DRAWING NO. E 802-SCSB-03

ALFREDO B. HANZA
REGISTERED
No.
60020657
STATE OF
INDIANA
PROFESSIONAL ENGINEER

/s/ Alfredo B. Hanza 09/20/13
DESIGN STANDARDS ENGINEER DATE

/s/ Mark A. Miller 09/26/13
CHIEF ENGINEER DATE

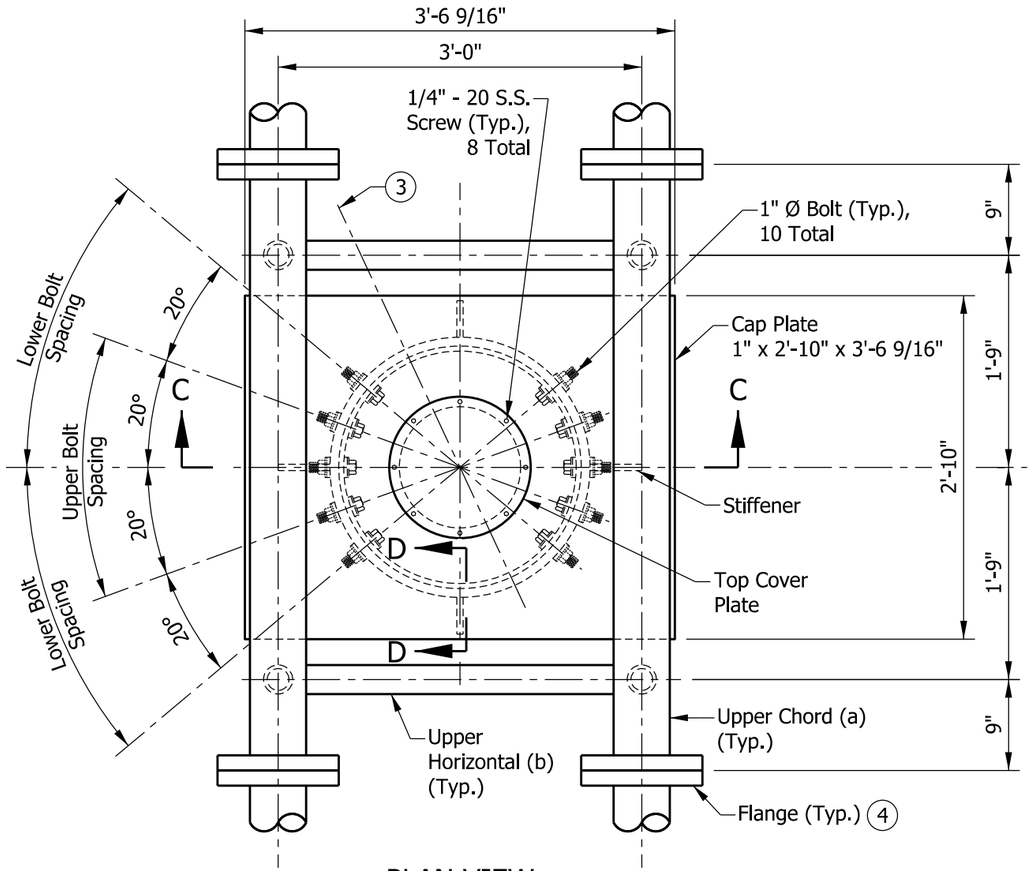

PLAN VIEW

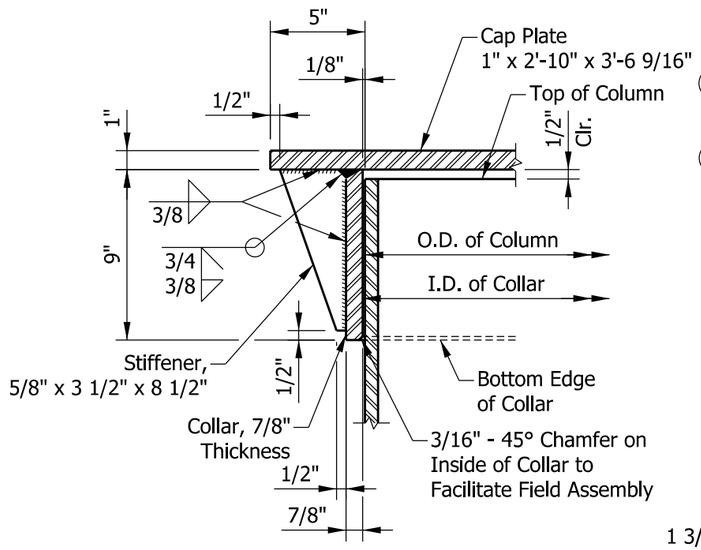

SECTION D-D

NOTES:

1. Connection bolts in collar and bolts at lower chord connection must be high strength with matching locknuts. Connection bolts shall each have two (2) stainless steel flat, washers. Bolts, contoured washers, and locknuts shall be galvanized.
2. After galvanizing, collar inside diameter shall equal outside diameter of galvanized column plus 1/8" (±1/16"). Maximum gap between column and collar at any location shall be 1/8" before tightening bolts.

(3) Optional full-penetration weld in collar may be made at two (2) locations 180° apart. X-ray or UT 100%.

(4) See Standard Drawing E 802-SCSB-03 for flange details.

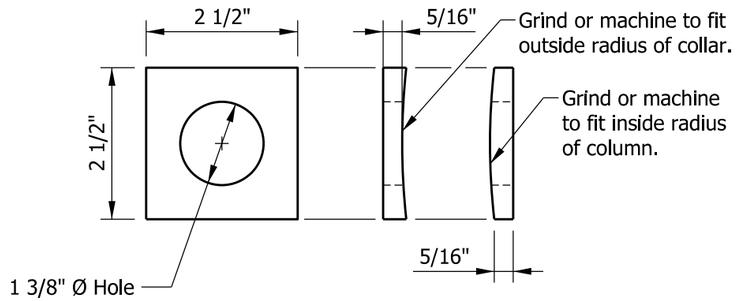

CONTOURED WASHER DETAIL

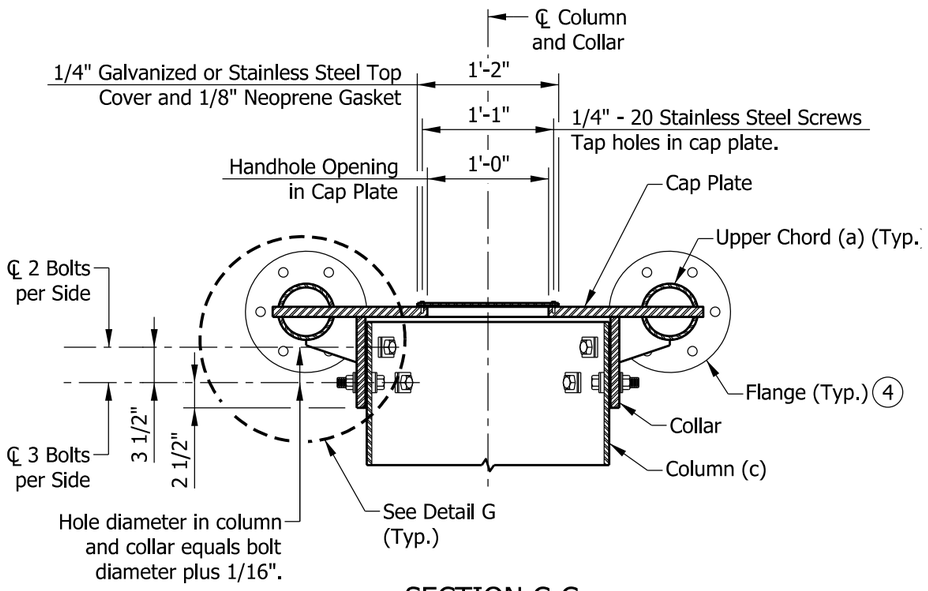

SECTION C-C

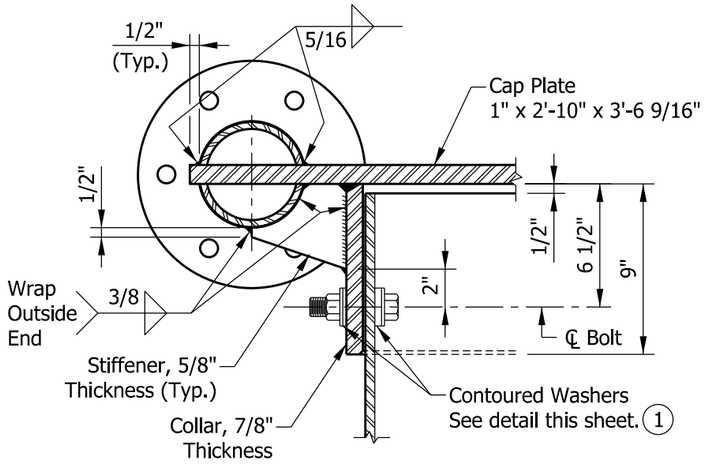

DETAIL G

INDIANA DEPARTMENT OF TRANSPORTATION	
SIGN CANTILEVER STRUCTURE BUTTERFLY UPPER CHORDS CONNECTION SEPTEMBER 2014	
STANDARD DRAWING NO. E 802-SCSB-04	
ALFREDO B. HANZA REGISTERED No. 60020657 STATE OF INDIANA PROFESSIONAL ENGINEER	/s/ Alfredo B. Hanza 09/20/13 DESIGN STANDARDS ENGINEER DATE
	/s/ Mark A. Miller 09/26/13 CHIEF ENGINEER DATE

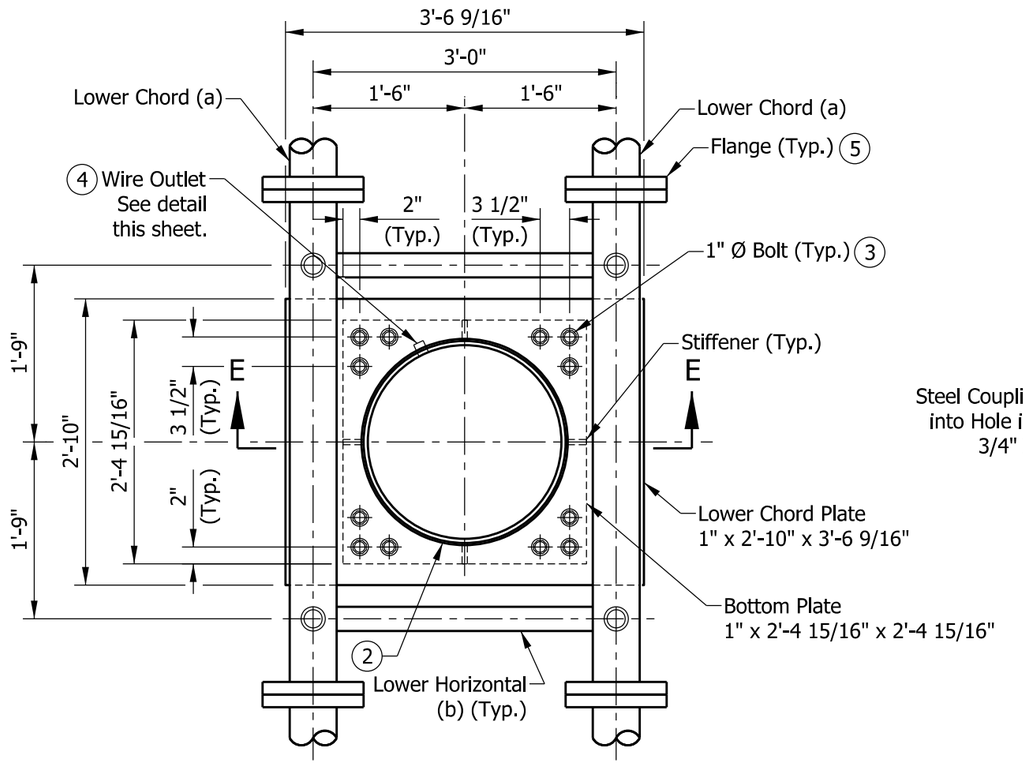

PLAN SECTION THROUGH COLUMN ABOVE LOWER CHORDS

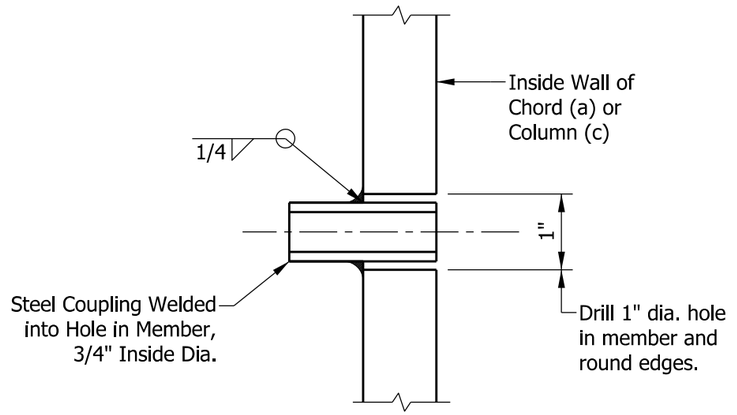

WIRE OUTLET

NOTES:

1. Grind top plate if required to fully seat lower chord plate. Repair damaged galvanizing before assembly.
2. After tightening lower connection bolts, fill gap with non-hardening silicone caulk suitable for exterior exposure.
3. Connection bolts in collar and bolts at lower chord connection must be high strength with matching locknuts. Connection bolts shall each have two (2) stainless steel flat washers. Bolts, contoured washers, and locknuts shall be galvanized.
4. Orient pipe toward sign. Hole diameter in column shall equal outside pipe diameter + 1/8".
5. See Standard Drawing E 802-SCSB-03 for flange details.

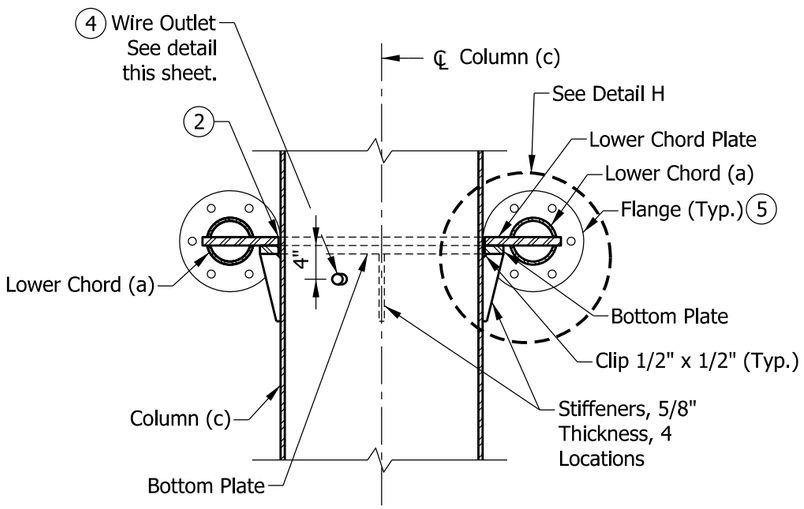

SECTION E-E

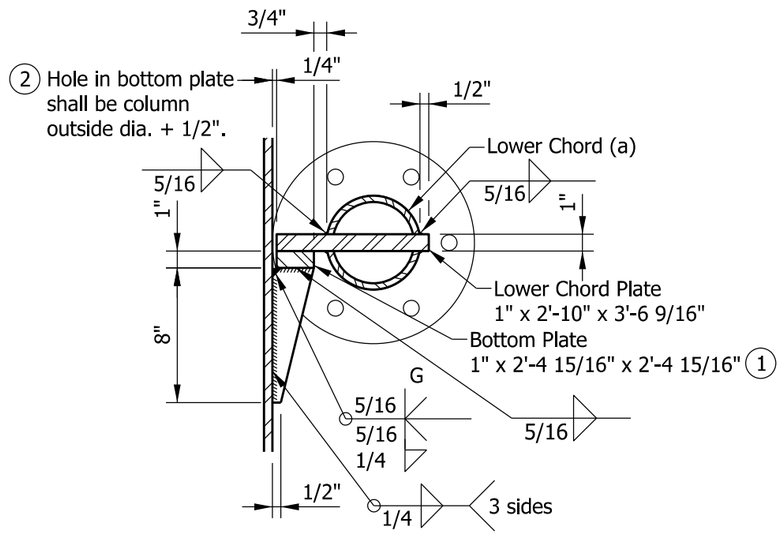

DETAIL H

INDIANA DEPARTMENT OF TRANSPORTATION

SIGN CANTILEVER STRUCTURE BUTTERFLY
LOWER CHORDS CONNECTION
AND WIRE OUTLET DETAIL

SEPTEMBER 2014

STANDARD DRAWING NO. E 802-SCSB-05

ALFREDO B. HANZA
REGISTERED
No.
60020657
STATE OF
INDIANA
PROFESSIONAL ENGINEER

/s/ Alfredo B. Hanza 09/25/13
DESIGN STANDARDS ENGINEER DATE

/s/ Mark A. Miller 09/26/13
CHIEF ENGINEER DATE

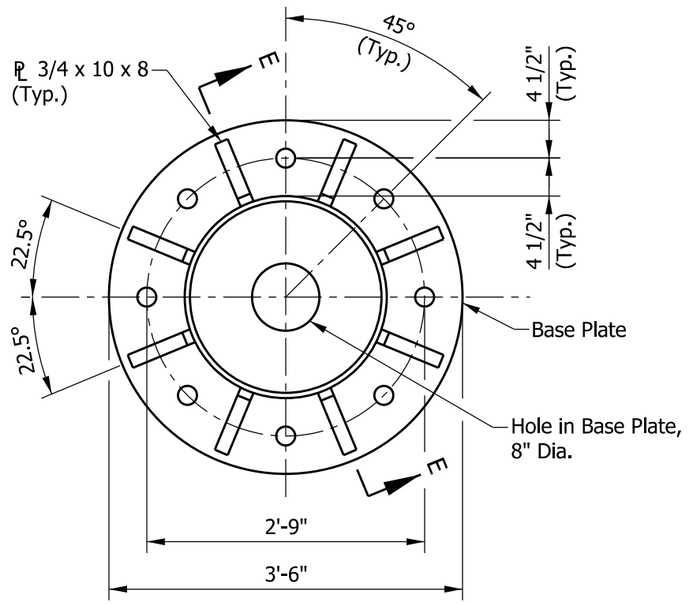

PLAN

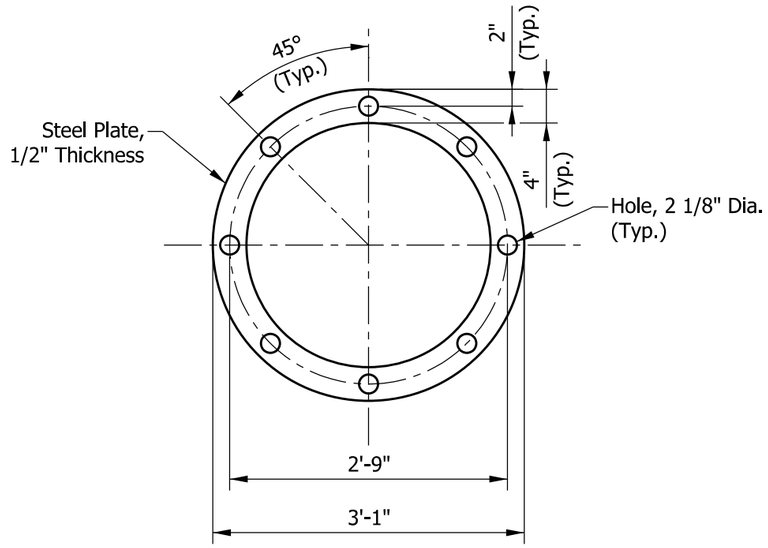

ANCHOR AND POSITIONING PLATE

NOTES:

1. Utilize temporary positioning plate and leveling nuts or other engineer-approved methods to maintain anchor bolt alignment during concrete placement. Positioning plate and associated nuts shall be removed upon completion of the foundation.
2. Protect threads during concreting with tape, sleeves, or other means.
3. 1'-6" is the minimum length which shall be galvanized. Entire bolt may be galvanized at contractor's option.
4. Provide uncoated nut at bottom of anchor plate. Deform thread or use chemical thread lock to secure.
5. Use continuous backer ring, 1/4" x 1" minimum. Tack weld only in root area of final weld.
6. Anchor bolt nuts shall be tightened against the base plate by turning the nut a minimum of 1/6 turn from snug tight condition.
7. UT - Ultrasonic Testing, 25% of entire column to base plate weld.
   MT - Magnetic Particle Testing, 25% or 1 side of 4 stiffeners.

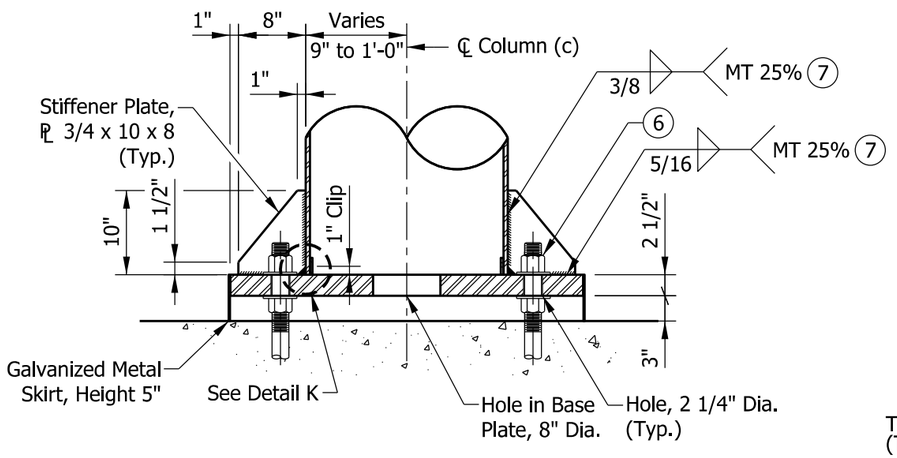

SECTION E-E

METAL SKIRT DETAIL

DETAIL K
BASE PLATE WELD

ANCHOR BOLT DETAIL

DETAIL I DETAIL J

INDIANA DEPARTMENT OF TRANSPORTATION

SIGN CANTILEVER STRUCTURE BUTTERFLY
BASE PLATE, ANCHOR BOLT, AND
METAL SKIRT DETAILS

SEPTEMBER 2014

STANDARD DRAWING NO. E 802-SCSB-06

ALFREDO B. HANZA
REGISTERED
No. 60020657
STATE OF INDIANA
PROFESSIONAL ENGINEER

/s/ Alfredo B. Hanza 09/20/13
DESIGN STANDARDS ENGINEER DATE

/s/ Mark A. Miller 09/26/13
CHIEF ENGINEER DATE

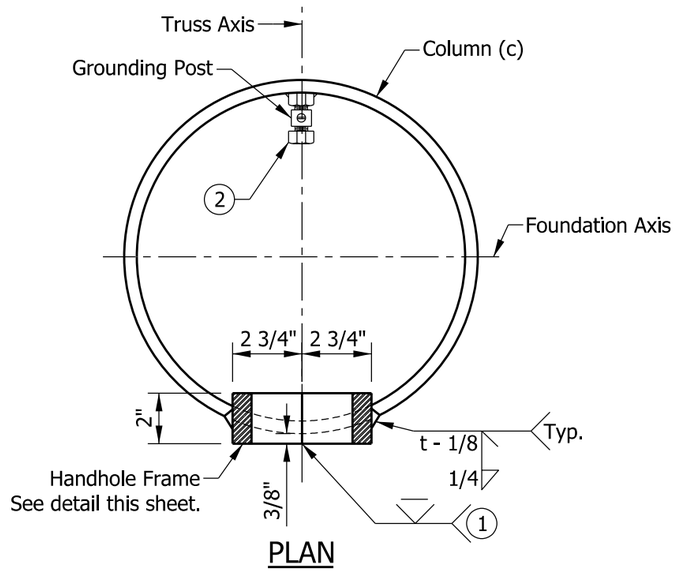

PLAN

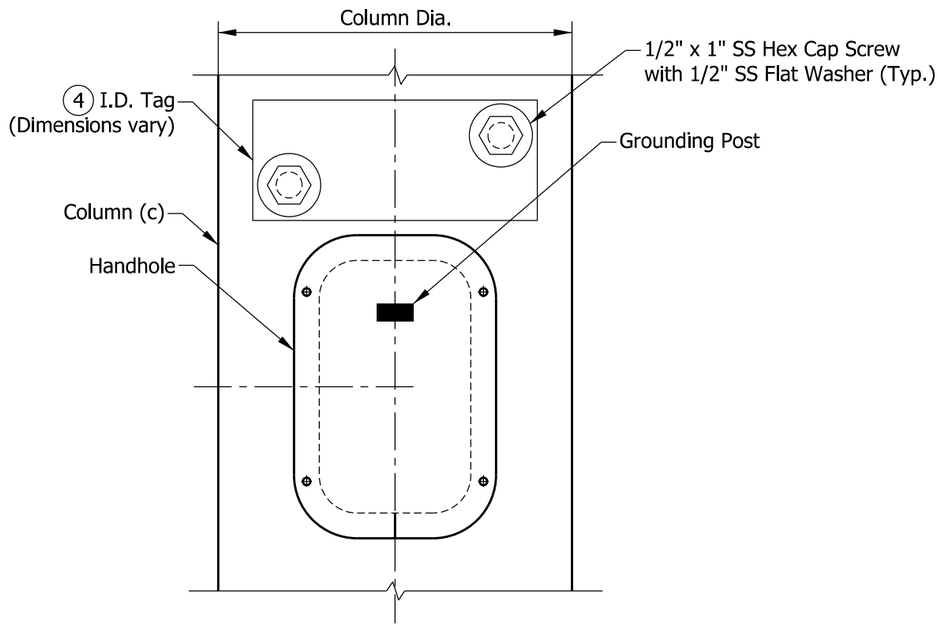

ELEVATION

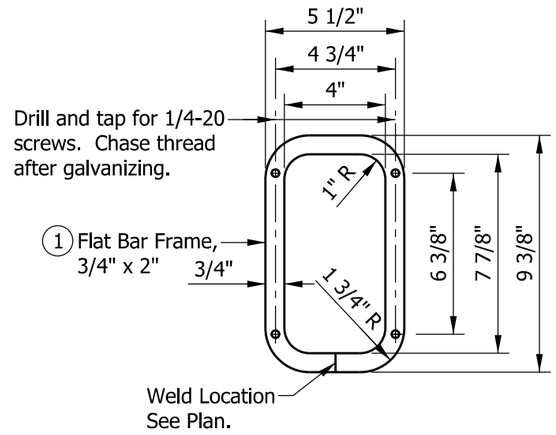

HANDHOLE FRAME

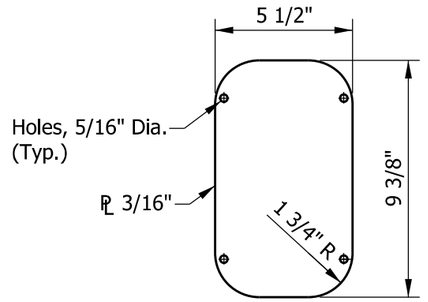

HANDHOLE COVER

NOTES:

1. In lieu of fabricated handhole frame as shown, frame may be cut from 2" plate with rolling direction vertical.
2. See Standard Drawing E 802-SNWR-03 for grounding post details. Grounding post shall be placed on far side of support directly opposite center of handhole.
3. See Standard Drawing E 802-SCSB-02 for handhole location.
4. I.D. tag is a 1/8" stainless steel plate with the following information stamped in 1/2" black letters:

   Manufacturer _____, Drawing/Order #_____
   Contract #_____, Structure Type _____
   Fabrication Date _____, Arm Length _____
   Pole Mounting Height _____

INDIANA DEPARTMENT OF TRANSPORTATION

SIGN CANTILEVER STRUCTURE BUTTERFLY
HANDHOLE AND I.D. TAG DETAILS

SEPTEMBER 2014

STANDARD DRAWING NO. E 802-SCSB-07

ALFREDO B. HANZA
REGISTERED
No. 60020657
STATE OF INDIANA
PROFESSIONAL ENGINEER

/s/ Alfredo B. Hanza 09/20/13
DESIGN STANDARDS ENGINEER DATE

/s/ Mark A. Miller 09/26/13
CHIEF ENGINEER DATE

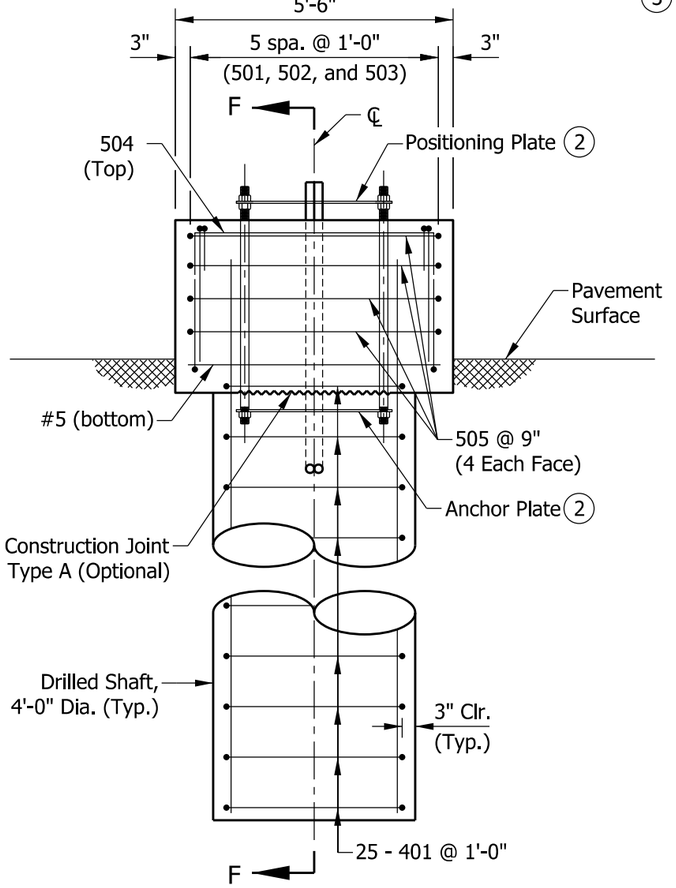

ELEVATION

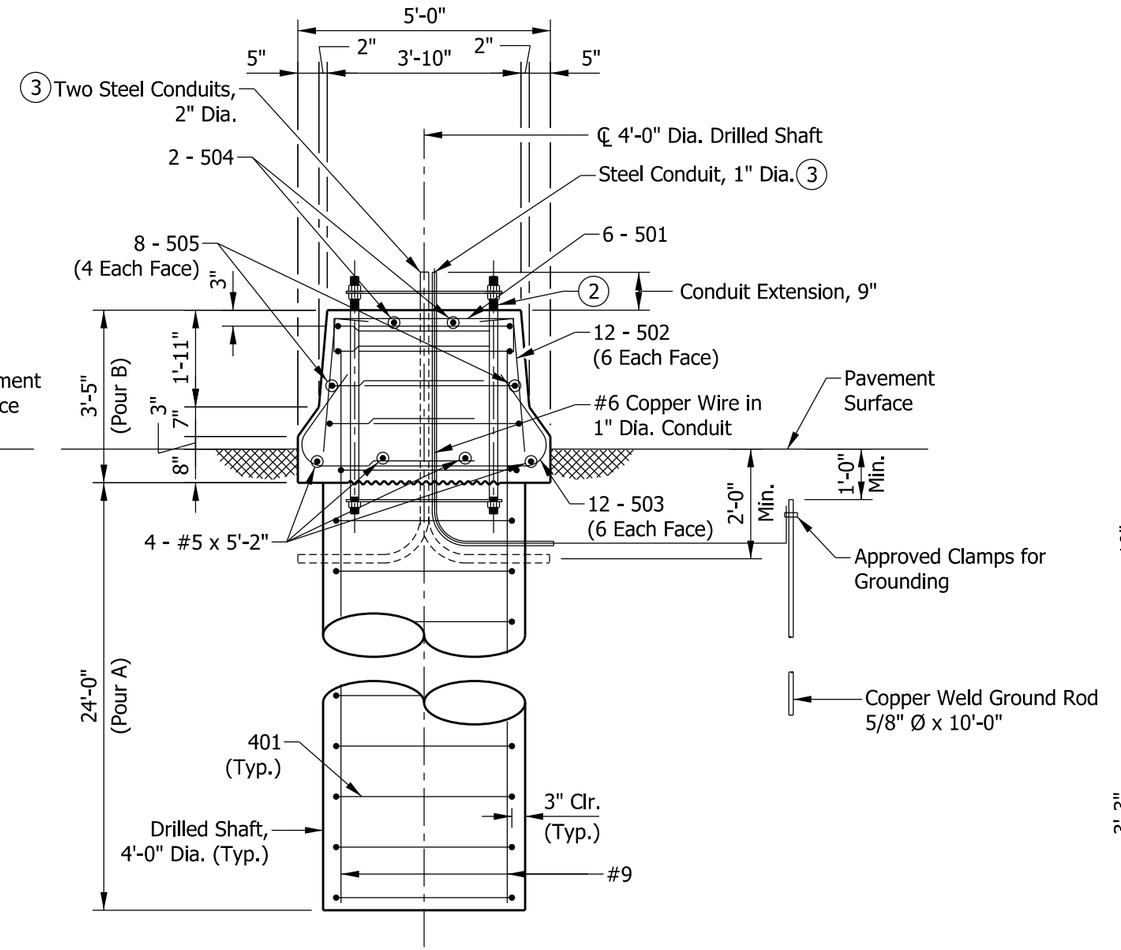

SECTION F-F

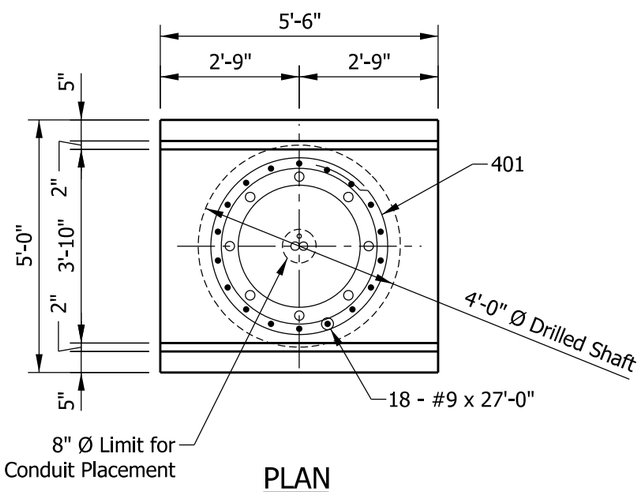

PLAN

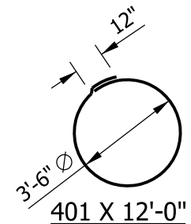

401 X 12'-0"

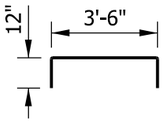

501 X 5'-6"

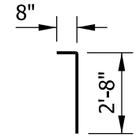

502 X 3'-4"

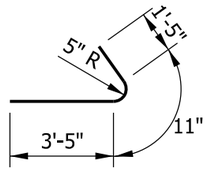

503 X 5'-9"

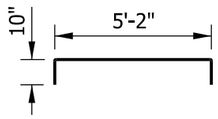

504 X 6'-10"

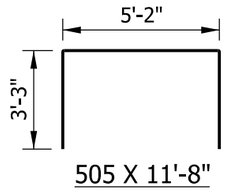

505 X 11'-8"

BILL OF MATERIALS			
EPOXY-COATED REINFORCING BARS			
MARK OR SIZE	NO. OF BARS	LENGTH	WEIGHT
#9	18	27'-0"	
Total #9			1652 LBS
501	6	5'-6"	
502	12	3'-4"	
503	12	5'-9"	
504	2	6'-10"	
505	8	11'-8"	
#5	4	5'-2"	
Total #5			281 LBS
401	25	12'-0"	
Total #4			200 LBS
Total Epoxy-Coated Reinforcing Bars			2133 LBS
CONCRETE, CLASS A			
Pour A			11.2 CYS
Pour B			3.0 CYS
Total Concrete, Class A			14.2 CYS
MISCELLANEOUS			
Surface Seal			5.9 SYS

NOTES:

1. See Standard Drawing E 602-CCMB-03 for barrier wall width transition.
2. See Standard Drawing E 802-SCSB-06 for anchor and positioning plate and anchor bolt details.
3. Thread and cap both ends of steel conduit.
4. Surface seal top and sides of barrier railing to the pavement surface.

INDIANA DEPARTMENT OF TRANSPORTATION

SIGN CANTILEVER STRUCTURE BUTTERFLY FOUNDATION AT 33" CONCRETE BARRIER

SEPTEMBER 2014

STANDARD DRAWING NO. E 802-SCSB-08

ALFREDO B. HANZA
REGISTERED
No. 60020657
STATE OF INDIANA
PROFESSIONAL ENGINEER

/s/ Alfredo B. Hanza — 09/20/13
DESIGN STANDARDS ENGINEER — DATE

/s/ Mark A. Miller — 09/26/13
CHIEF ENGINEER — DATE

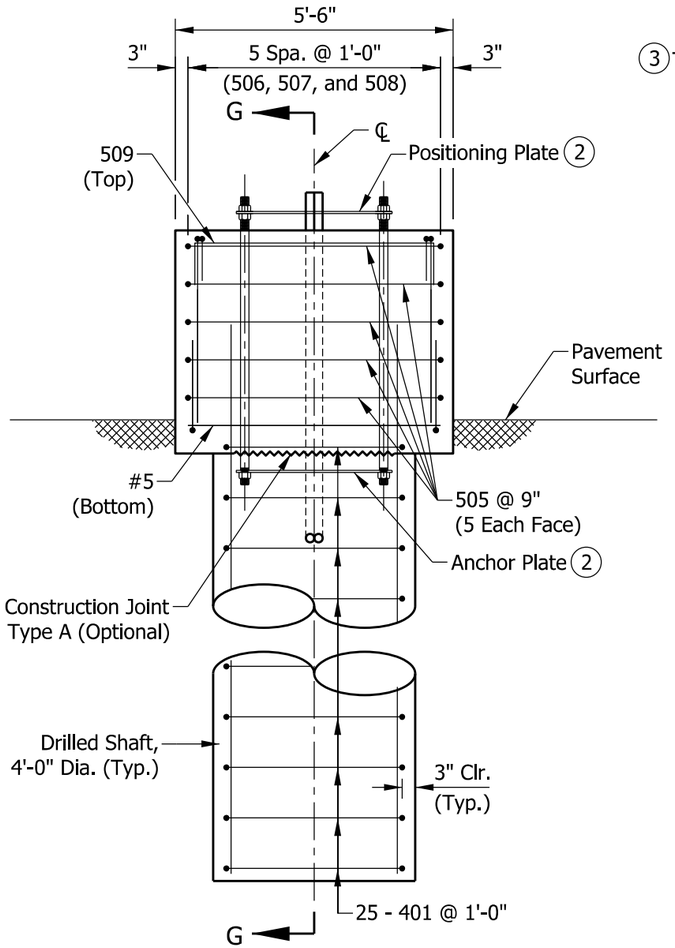

ELEVATION

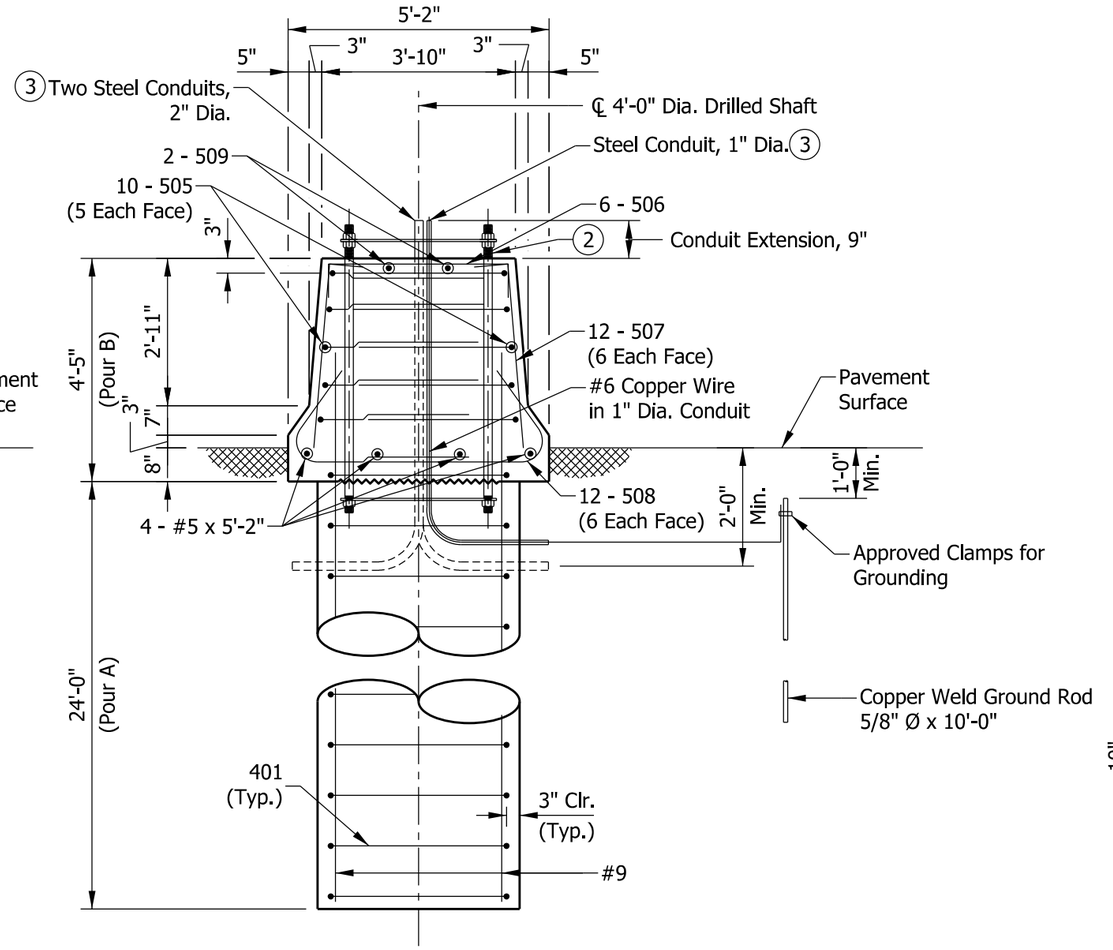

SECTION G-G

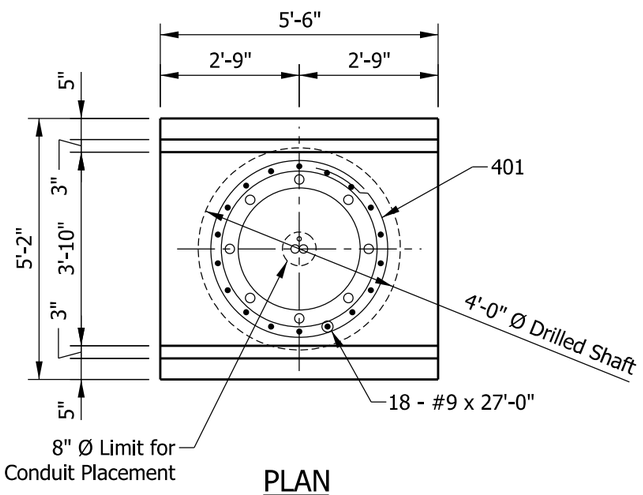

PLAN

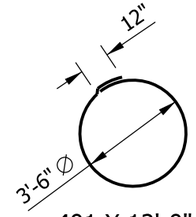

401 X 12'-0"

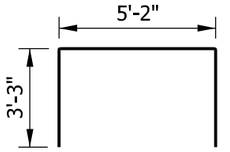

505 X 11'-8"

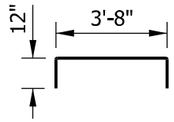

506 X 5'-8"

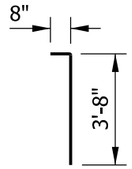

507 X 4'-4"

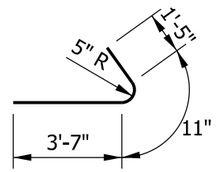

508 X 5'-11"

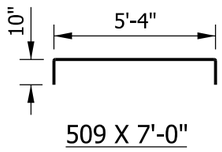

509 X 7'-0"

BILL OF MATERIALS			
EPOXY-COATED REINFORCING BARS			
MARK OR SIZE	NO. OF BARS	LENGTH	WEIGHT
#9	18	27'-0"	
Total #9			1652 LBS
505	10	11'-8"	
506	6	5'-8"	
507	12	4'-4"	
508	12	5'-11"	
509	2	7'-0"	
#5	4	5'-2"	
Total #5			322 LBS
401	25	12'-0"	
Total #4			200 LBS
Total Epoxy-Coated Reinforcing Bars			2174 LBS
CONCRETE, CLASS A			
Pour A			11.2 CYS
Pour B			4.0 CYS
Total Concrete, Class A			15.2 CYS
MISCELLANEOUS			
Surface Seal			7.1 SYS

NOTES:

1. See Standard Drawing E 602-CCMB-03 for barrier wall width transition.
2. See Standard Drawing E 802-SCSB-06 for anchor and positioning plate and anchor bolt details.
3. Thread and cap both ends of steel conduit.
4. Surface seal top and sides of barrier railing to the pavement surface.

INDIANA DEPARTMENT OF TRANSPORTATION

SIGN CANTILEVER STRUCTURE BUTTERFLY FOUNDATION AT 45" CONCRETE BARRIER

SEPTEMBER 2014

STANDARD DRAWING NO. E 802-SCSB-09

ALFREDO B. HANZA
REGISTERED
No. 60020657
STATE OF INDIANA
PROFESSIONAL ENGINEER

/s/ Alfredo B. Hanza 09/20/13
DESIGN STANDARDS ENGINEER DATE

/s/ Mark A. Miller 09/26/13
CHIEF ENGINEER DATE

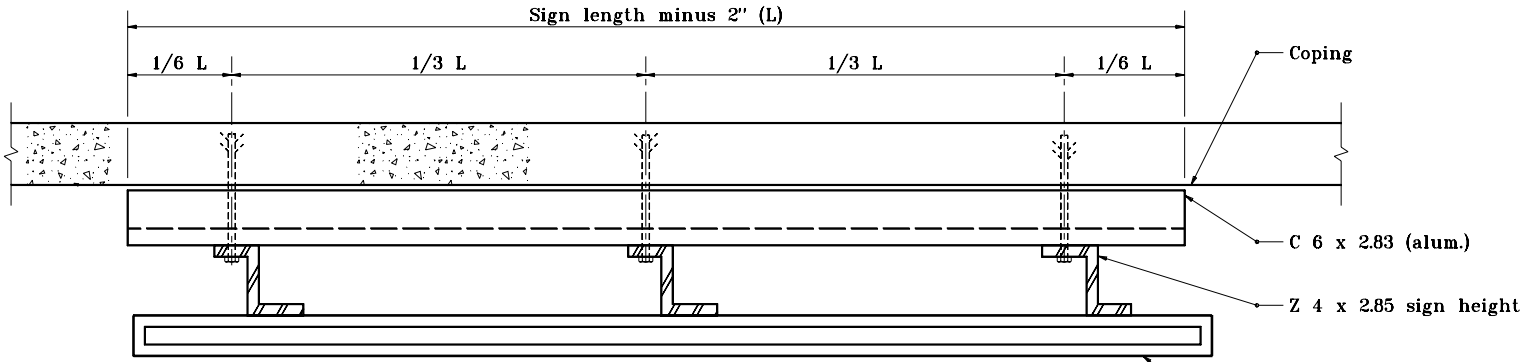

PLAN (TYPE A)
0° CONNECTION

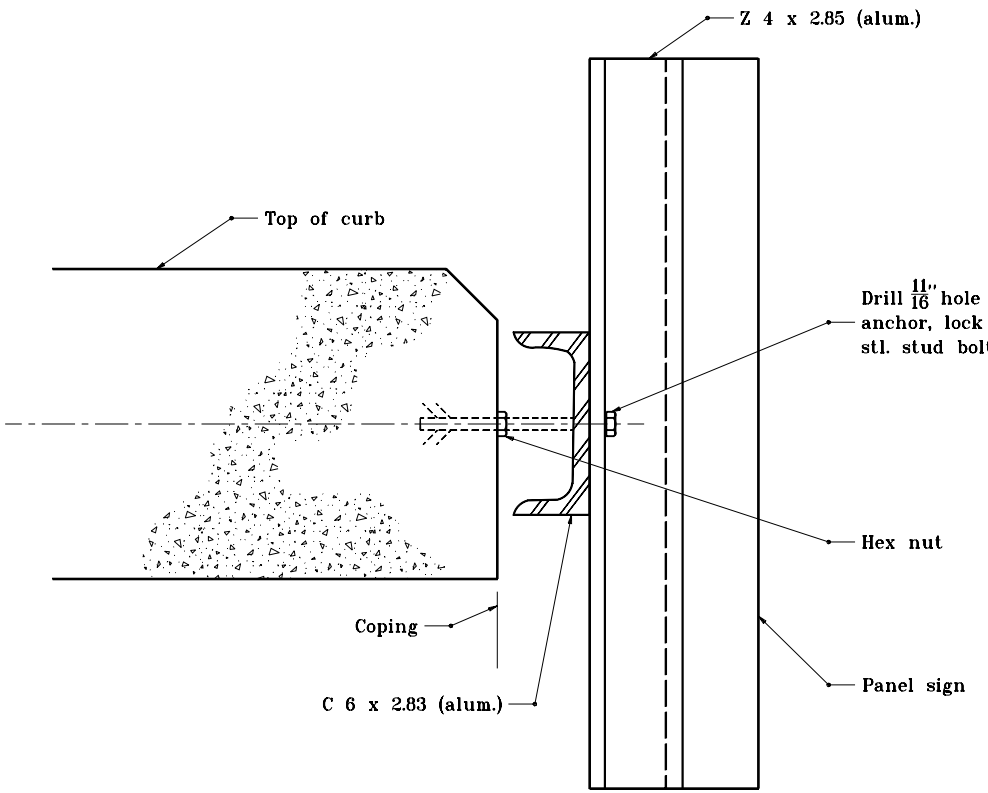

SECTION A–A

INDIANA DEPARTMENT OF TRANSPORTATION

BRIDGE BRACKET ASSY. FOR CROSSROAD SIGNING

SEPTEMBER 2001

STANDARD DRAWING NO. **E 802–SNBB–01**

ANTHONY L. UREMOVICH REGISTERED No. 18095 STATE OF INDIANA PROFESSIONAL ENGINEER

DESIGN STANDARDS ENGINEER

/s/ Anthony L. Uremovich 9-04-01
DESIGN STANDARDS ENGINEER — DATE

/s/ Firooz Zandi 9-04-01
CHIEF HIGHWAY ENGINEER — DATE

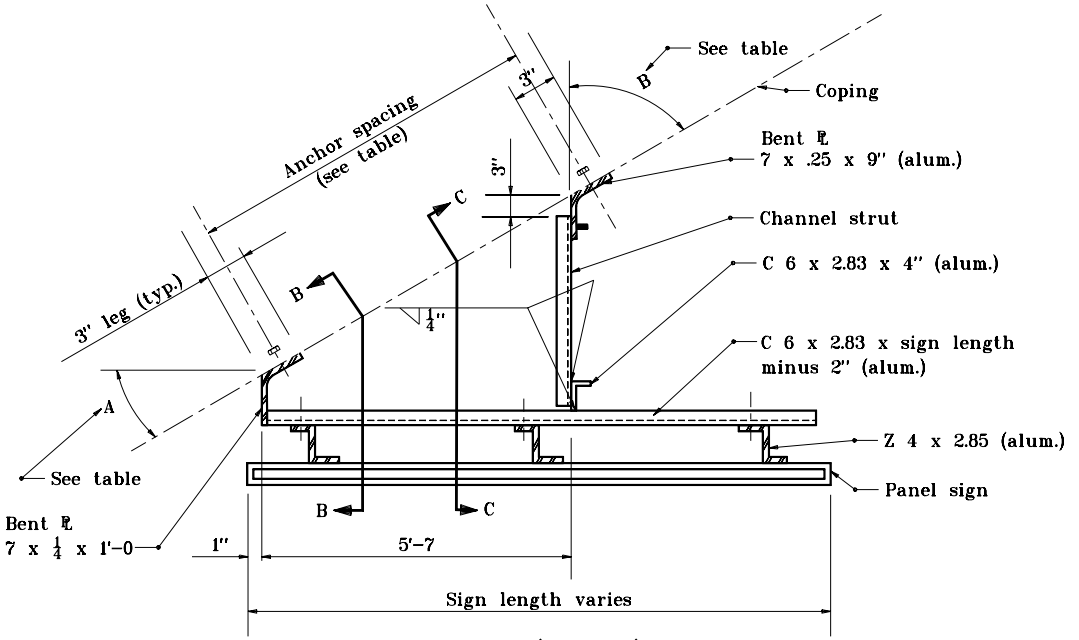

PLAN (TYPE A)

10°, 20°, 30°, & 40° CONNECTIONS

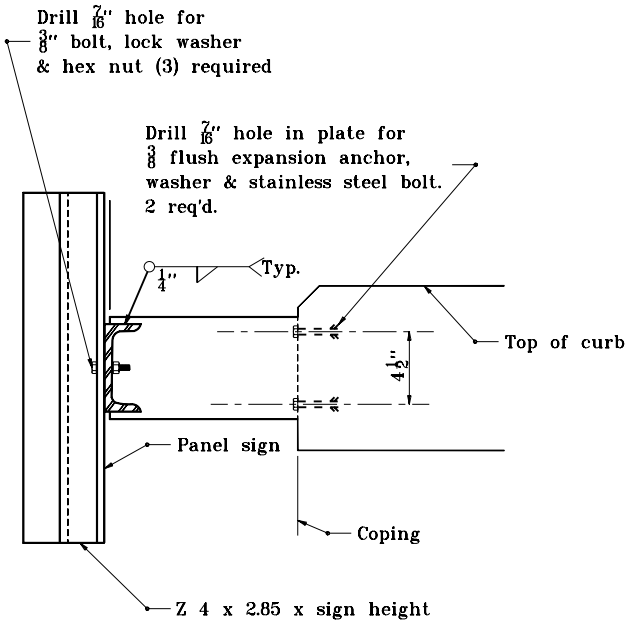

SECTION B–B

GENERAL NOTES

(1) See Standard Drawing E 802-SNBB-05 for table.

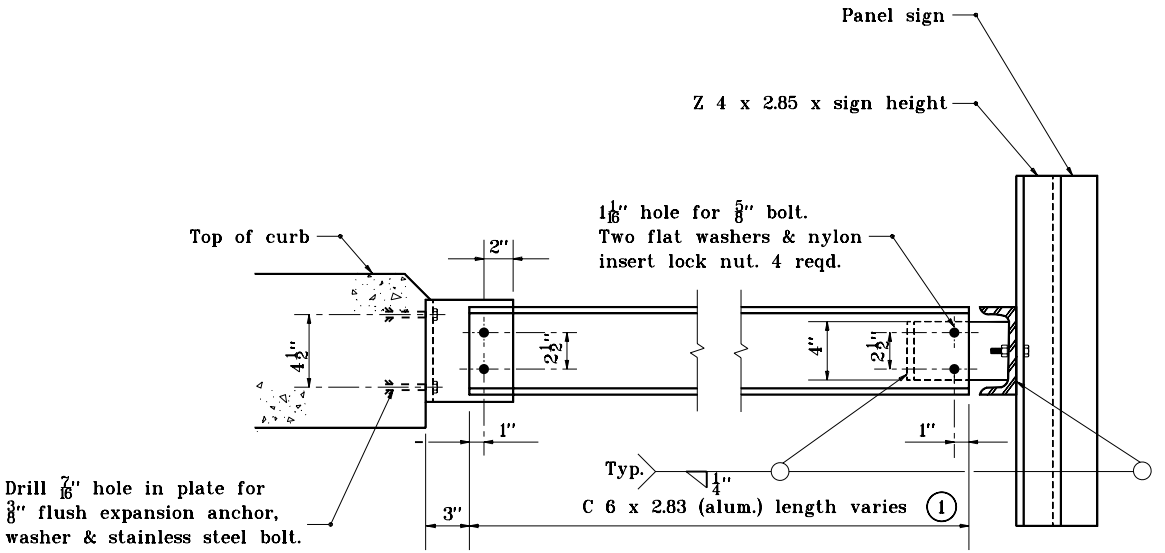

SECTION C–C

INDIANA DEPARTMENT OF TRANSPORTATION

BRIDGE BRACKET ASSY. FOR CROSSROAD SIGNING

SEPTEMBER 2001

STANDARD DRAWING NO. E 802-SNBB-02

ANTHONY L. UREMOVICH REGISTERED No. 18095 STATE OF INDIANA PROFESSIONAL ENGINEER

DESIGN STANDARDS ENGINEER

/s/ Anthony L. Uremovich 9-04-01
DESIGN STANDARDS ENGINEER — DATE

/s/ Firooz Zandi 9-04-01
CHIEF HIGHWAY ENGINEER — DATE

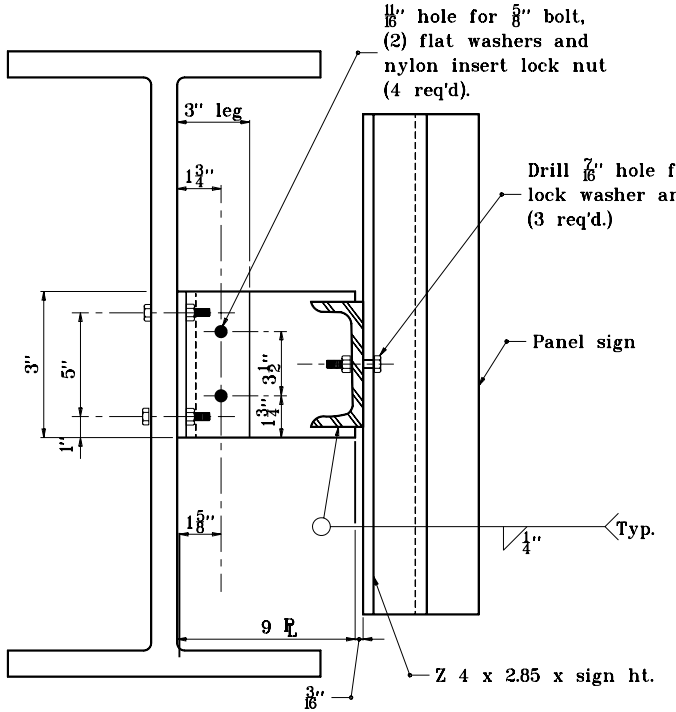

SECTION D–D

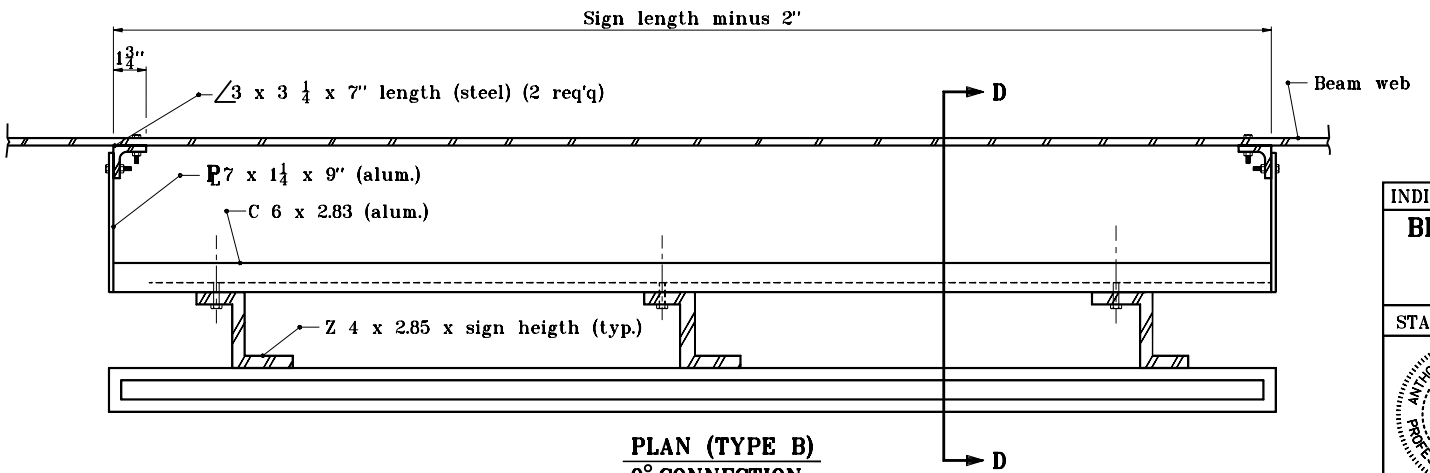

PLAN (TYPE B)
0° CONNECTION

INDIANA DEPARTMENT OF TRANSPORTATION

BRIDGE BRACKET ASSY. FOR CROSS–ROAD SIGNING

SEPTEMBER 2001

STANDARD DRAWING NO. E 802–SNBB–03

ANTHONY L. UREMOVICH REGISTERED No. 18095 STATE OF INDIANA PROFESSIONAL ENGINEER

DESIGN STANDARDS ENGINEER

/s/ Anthony L. Uremovich 9–04–01
DESIGN STANDARDS ENGINEER — DATE

/s/ Firooz Zandi 9–04–01
CHIEF HIGHWAY ENGINEER — DATE

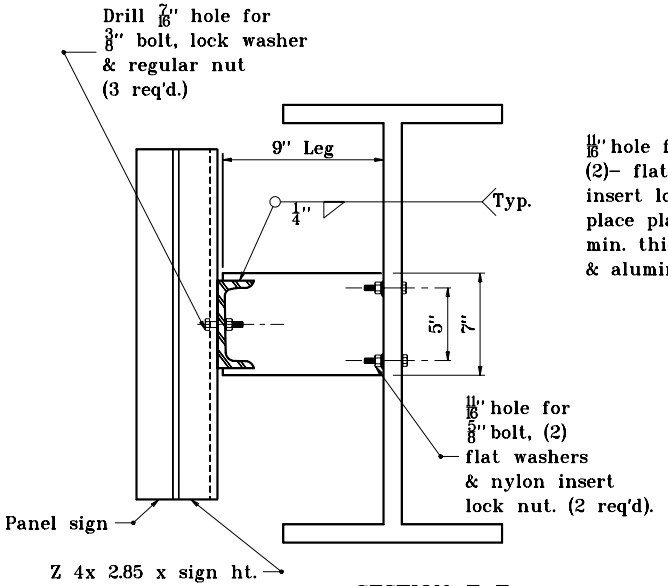

SECTION E–E

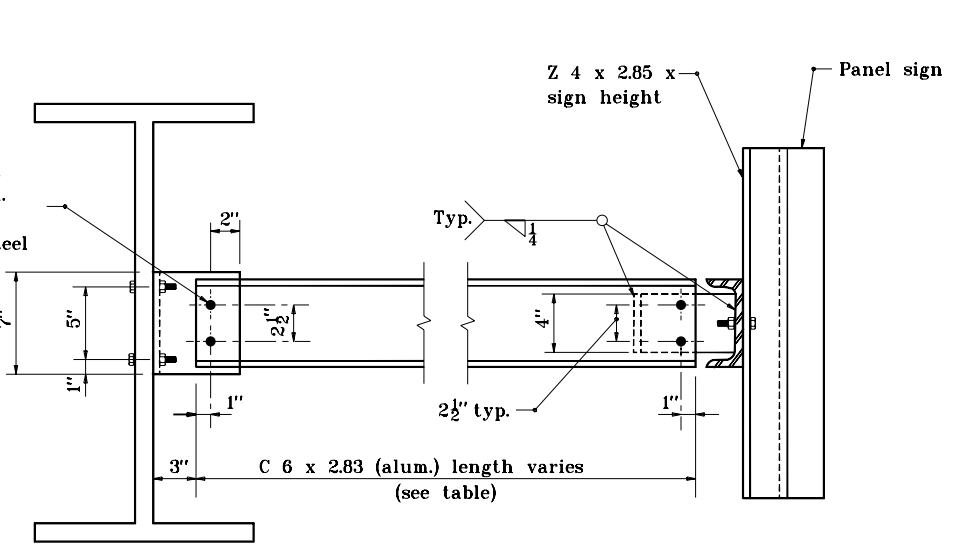

SECTION F–F

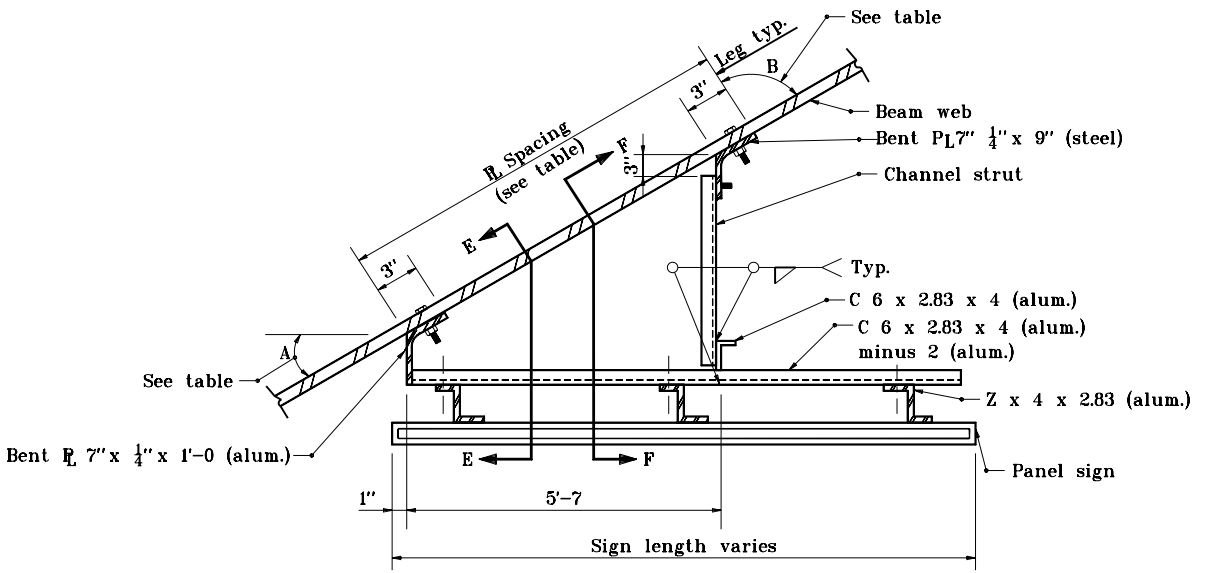

PLAN (TYPE B)

10°, 20°, 30°, & 40° Connections

INDIANA DEPARTMENT OF TRANSPORTATION

BRIDGE BRACKET ASSY. FOR CROSSROAD SIGNING

SEPTEMBER 2001

STANDARD DRAWING NO. E 802–SNBB–04

ANTHONY L. UREMOVICH REGISTERED No. 18095 STATE OF INDIANA PROFESSIONAL ENGINEER

DESIGN STANDARDS ENGINEER

/s/ Anthony L. Uremovich 9-04-01
DESIGN STANDARDS ENGINEER — DATE

/s/ Firooz Zandi 9-04-01
CHIEF HIGHWAY ENGINEER — DATE

TYPE A & B BRIDGE CONNECTION TABLE

SKEW	CONNECTION (ANGLE A)	ANGLE B	CHANNEL STRUT LENGTH	ANCHOR SPACING	PLATE SPACING
0°– 10°	0°	———	———	———	———
10°– 20°	10°	80°	C 6 x 2.83 x 1'–4 3/4"	5'–6	5'–11
20°– 30°	20°	70°	C 6 x 2.83 x 2'–5 1/4"	5'–11 1/2"	6'–2 1/2"
30°– 40°	30°	60°	C 6 x 2.83 x 3'–7 1/2"	6'–5 1/2"	6'–8 1/2"
40°– 50°	40°	50°	C 6 x 2.83 x 5'–1 1/4"	7'–3 3/4"	7'–6 1/2"

GENERAL NOTES

1. Bottom edge of sign shall be horizontal when erected and shall be a minimum of 1'–6 above the bridge beam flange at all points.

2. All 3/8" bolts used with 3/8" expansion anchors shall be 1 in. long (±0 ") and shall engage expansion anchors of 1 1/2 times the bolt dia. or 9 threads minimum except for Type A 0° connections to bridge fascia. The contractor may use either type A or B.

INDIANA DEPARTMENT OF TRANSPORTATION

BRIDGE BRACKET ASSY. FOR CROSSROAD SIGNING

SEPTEMBER 2001

STANDARD DRAWING NO. E 802–SNBB–05

ANTHONY L. UREMOVICH REGISTERED No. 18095 STATE OF INDIANA PROFESSIONAL ENGINEER

DESIGN STANDARDS ENGINEER

/s/ Anthony L. Uremovich 9–04–01
DESIGN STANDARDS ENGINEER — DATE

/s/ Firooz Zandi 9–04–01
CHIEF HIGHWAY ENGINEER — DATE

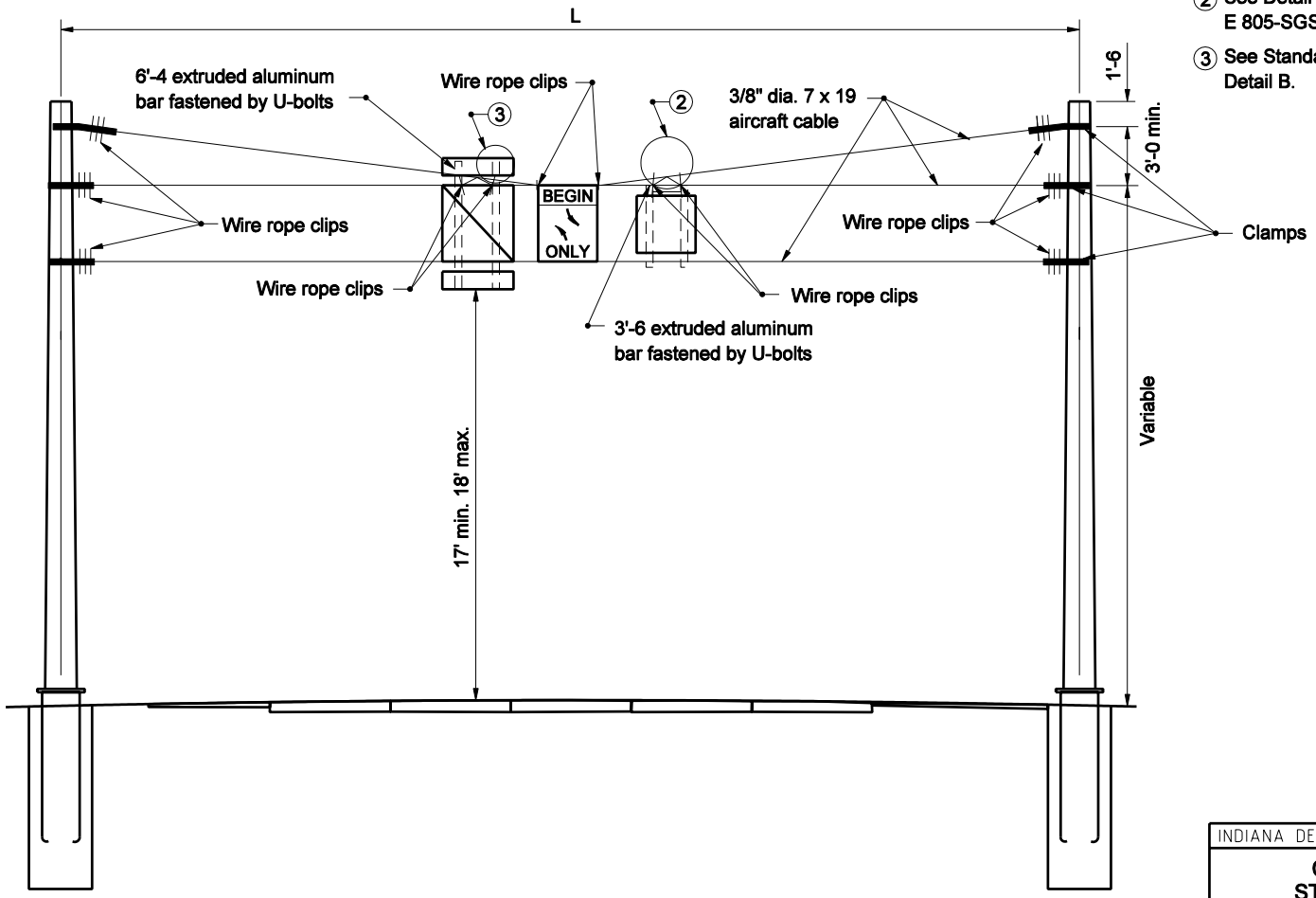

GENERAL NOTES

1. Sign centered over appropiate lane unless otherwise shown on cross section.

(2) See Detail A on Standard Drawing E 805-SGSC-04

(3) See Standard Drawing E 802-SNCS-03 Detail B.

INDIANA DEPARTMENT OF TRANSPORTATION

CABLE SPAN SIGN STRUCTURE DETAILS

SEPTEMBER 2005

STANDARD DRAWING NO. E 802-SNCS-01

ANTHONY L. UREMOVICH REGISTERED No. 18095 STATE OF INDIANA PROFESSIONAL ENGINEER

DESIGN STANDARDS ENGINEER

/s/ Anthony L.Uremovich 9-01-05
DESIGN STANDARDS ENGINEER DATE

/s/ Firooz Zandi 9-01-05
CHIEF HIGHWAY ENGINEER DATE

GENERAL NOTES

① Square nut under base plate for plumbing or raking pole.

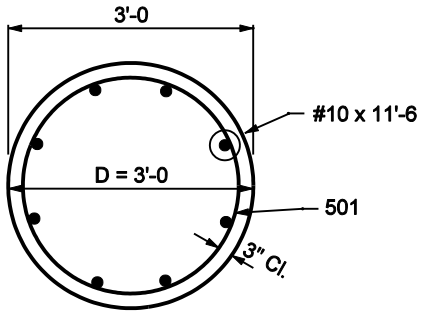

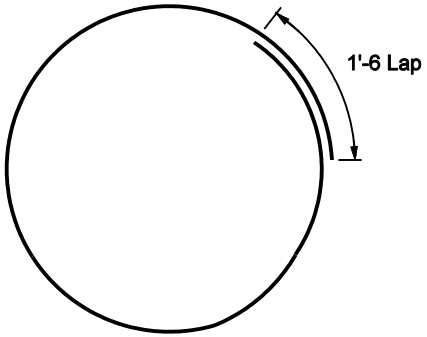

501 x 9'-3

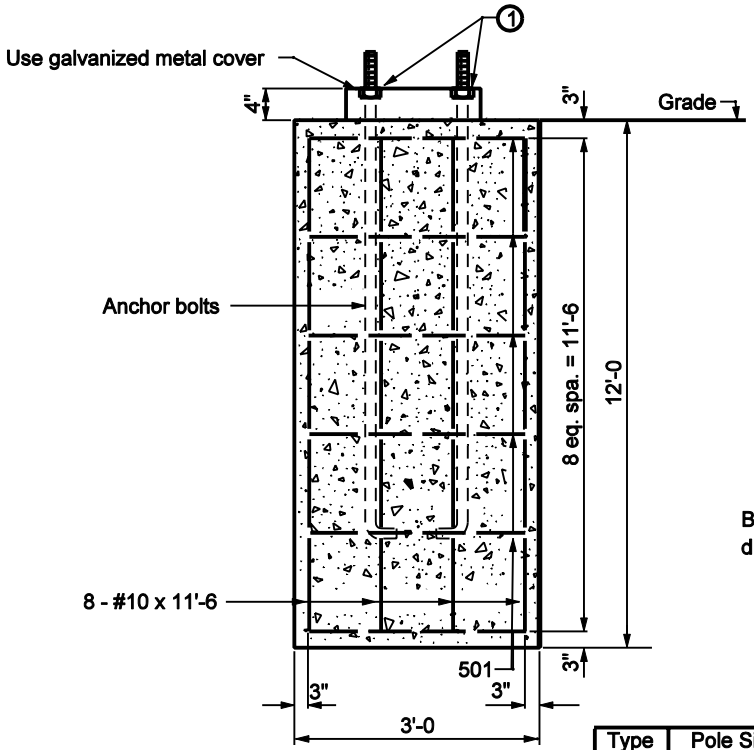

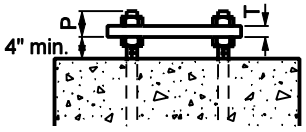

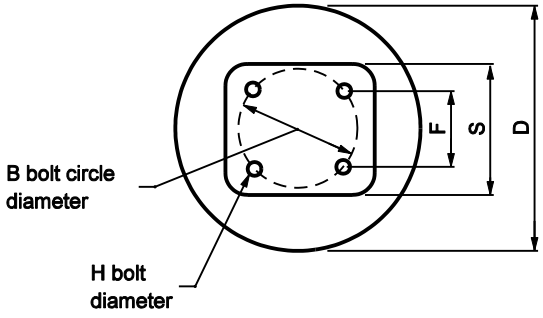

Type	Pole Size	Gauge	D	B	F	H	P	R	S	T	Anchor bolts
IV	12" x 24 ft	0	36"	16"	11"	2"	3"	3"	17"	2"	1" x 7'-6
	14" x 26 ft	0	36"	20"	14"	2"	4"	4"	20"	2"	2" x 8'-0
	15" x 30 ft	0	36"	22"	15"	2"	4"	4"	23"	2"	2" x 8'-0

INDIANA DEPARTMENT OF TRANSPORTATION

CABLE SPAN SIGN FOUNDATION DETAILS

MARCH 2003

STANDARD DRAWING NO. E 802-SNCS-02

RICHARD L. VanCLEAVE REGISTERED No. 9750 STATE OF INDIANA PROFESSIONAL ENGINEER

DESIGN STANDARDS ENGINEER

/s/ Richard L. VanCleave 3-03-03
DESIGN STANDARDS ENGINEER DATE

/s/ Richard K. Smutzer 3-03-03
CHIEF HIGHWAY ENGINEER DATE

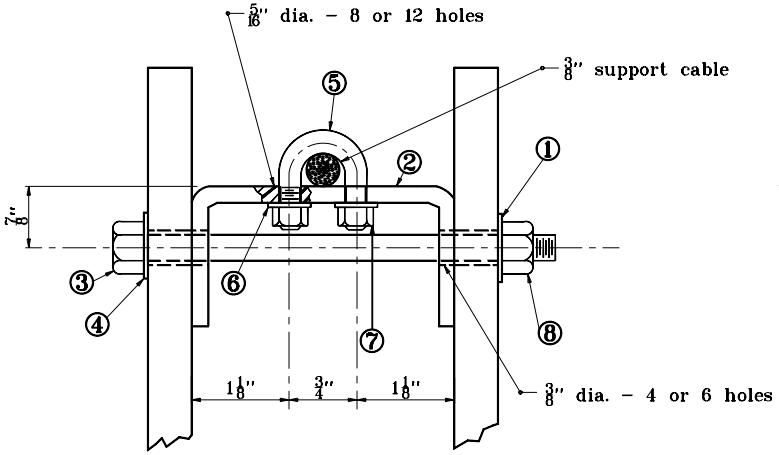

DETAIL A

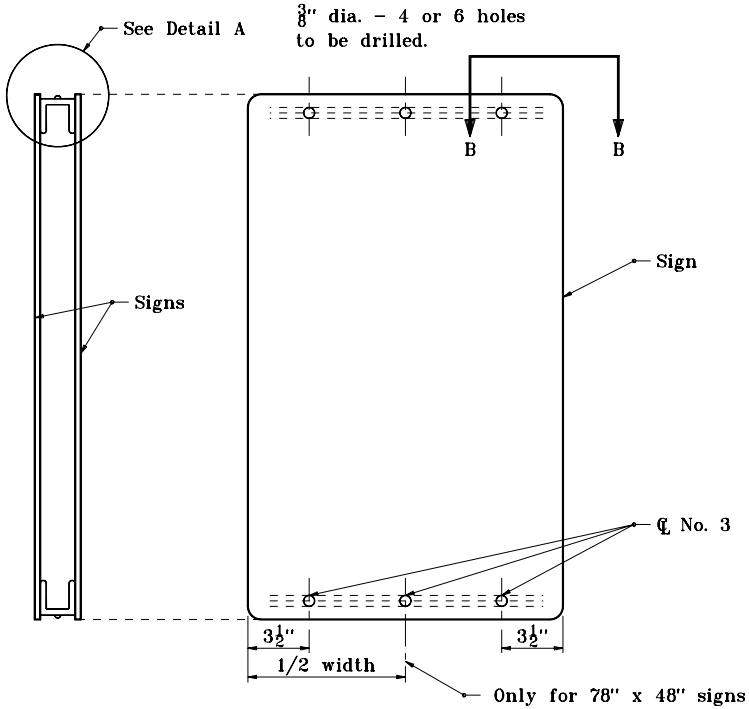

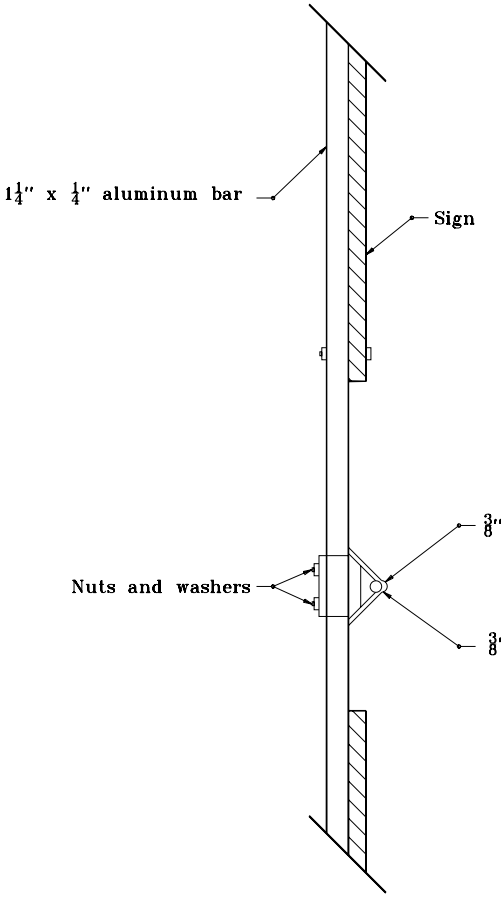

DETAIL B

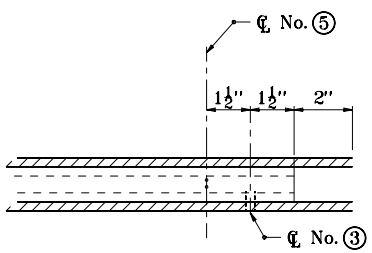

B–B TOP VIEW

PART No.	MATERIAL DESCRIPTION
①	5/16" nylon washer
②	3 x 4.1 steel channel
③	5/16 x 4" bolt
④	5/16" nylon washer
⑤	1/4" x 2 3/4" U bolt
⑥	1/4" lock washer
⑦	1/4" hex nut
⑧	5/16" lock nut

INDIANA DEPARTMENT OF TRANSPORTATION

CABLE SPAN SIGN STRUCTURE DETAILS

SEPTEMBER 2001

STANDARD DRAWING NO. **E 802–SNCS–03**

ANTHONY L. UREMOVICH REGISTERED No. 18095 STATE OF INDIANA PROFESSIONAL ENGINEER

DESIGN STANDARDS ENGINEER

/s/ Anthony L. Uremovich 9-04-01
DESIGN STANDARDS ENGINEER — DATE

/s/ Firooz Zandi 9-04-01
CHIEF HIGHWAY ENGINEER — DATE

INDEX

SHEET NO.	SUBJECT
1	Sign Placement Divided Highway Intersection Index Sheet
2	Sign Placement Divided Highway Intersection Where Left-Turns Do Not Overlap
3	Sign Placement Divided Highway Intersection Where Left-Turns Overlap

INDIANA DEPARTMENT OF TRANSPORTATION

SIGN PLACEMENT DIVIDED HIGHWAY
INTERSECTION INDEX SHEET

SEPTEMBER 2026

STANDARD DRAWING NO. E 802-SNDH-01

DAVID H. BORUFF
REGISTERED
No.
60900348
STATE OF
INDIANA
PROFESSIONAL ENGINEER

David H Boruff 4/28/2026
DESIGN STANDARDS ENGINEER DATE

04/29/2026
CHIEF ENGINEER DATE

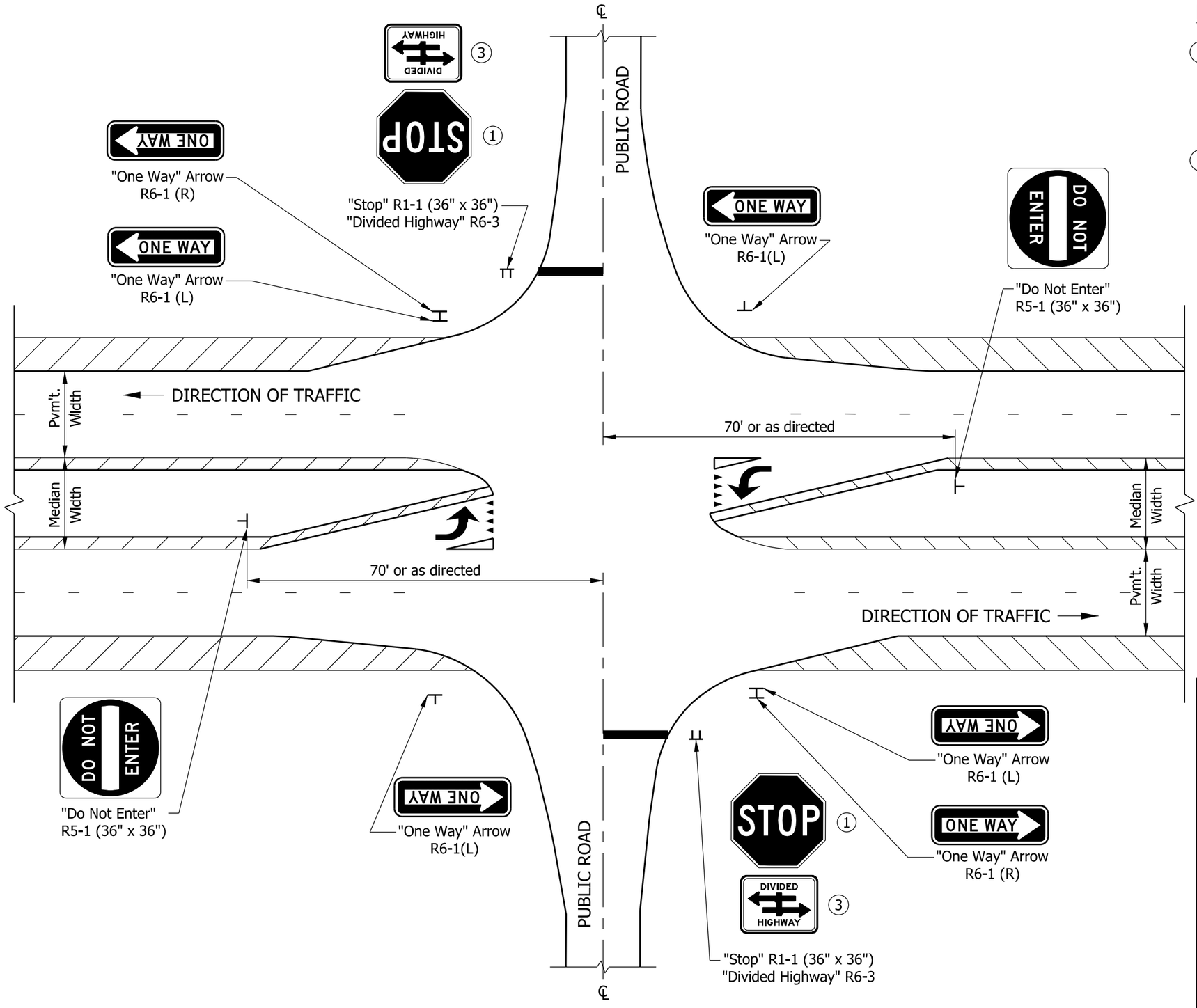

NOTES:

1. "Stop Ahead" sign may be required if there is determined to be poor observation of the "Stop" sign. See plans for locations.
2. This drawing shall apply to intersections with or without turn lanes where the left-turns do not overlap for trucks with semitrailers.
3. R6-3a shall be used in place of R6-3 at T-intersection.

INDIANA DEPARTMENT OF TRANSPORTATION

SIGN PLACEMENT DIVIDED HIGHWAY INTERSECTION WHERE LEFT-TURNS FROM DIVIDED HIGHWAY DO NOT OVERLAP

SEPTEMBER 2026

STANDARD DRAWING NO. E 802-SNDH-02

DAVID H. BORUFF REGISTERED No. 60900348 STATE OF INDIANA PROFESSIONAL ENGINEER

David H Boruff 4/28/2026
DESIGN STANDARDS ENGINEER DATE

04/29/2026
CHIEF ENGINEER DATE

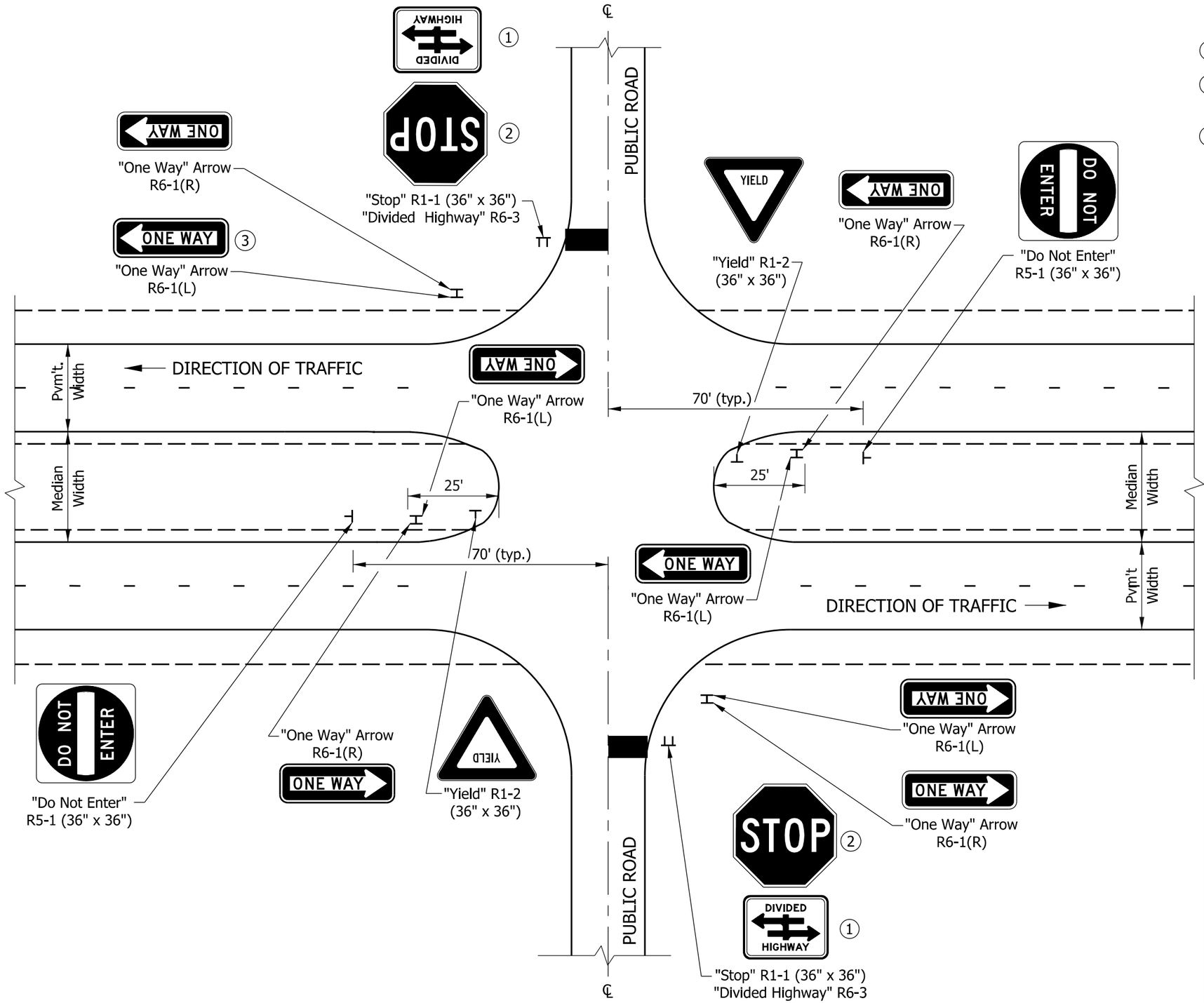

NOTES:

1. R6-3a shall be used in place of R6-3 at T-intersection.
2. "Stop Ahead" sign may be required if there is determined to be poor observation of the "Stop" sign. See plans for locations.
3. Sign shall be placed on centerline of public road approach for T-intersection.
4. This drawing shall apply to intersections with or without turn lanes, where the left-turns for trucks with semitrailers overlap (i.e. the median width is > 24 ft and gap between the medians at the intersection is < 66 ft).

INDIANA DEPARTMENT OF TRANSPORTATION

SIGN PLACEMENT DIVIDED HIGHWAY INTERSECTION WHERE LEFT-TURNS FROM DIVIDED HIGHWAY OVERLAP

SEPTEMBER 2026

STANDARD DRAWING NO. E 802-SNDH-03

DAVID H. BORUFF REGISTERED No. 60900348 STATE OF INDIANA PROFESSIONAL ENGINEER

DESIGN STANDARDS ENGINEER — DATE 4/28/2026

CHIEF ENGINEER — DATE 04/29/2026

INDEX

SHEET NO.	SUBJECT
1	Wide-Flange Sign Support and Panel Sign Drawing Index
2	Wide-Flange Sign Support, Placement and Post Spacing
3	Wide-Flange Sign Support, Base Connection
4	Wide-Flange Sign Support, Base Connection Dimensions
5	Wide-Flange Sign Support, Fuse/Hinge Plate Connection
6	Panel Sign Connection Details
7	Panel Sign Post Clip
8	Wide-Flange Sign Support, Post Selection Table, Clear Height=8 ft
9	Wide-Flange Sign Support, Post Selection Table, Clear Height=10 ft
10	Wide-Flange Sign Support, Post Selection Table, Clear Height=12 ft
11	Wide-Flange Sign Support, Post Selection Table, Clear Height=14 ft
12	Wide-Flange Sign Support, Post Selection Table, Clear Height=16 ft
13	Wide-Flange Sign Support, Post Selection Table, Clear Height=18 ft
14	Wide-Flange Sign Support, Post Selection Table, Clear Height=20 ft
15	Wide-Flange Sign Support, Post Selection Table, Clear Height=22 ft
16	Wide-Flange Sign Support, Foundation

INDIANA DEPARTMENT OF TRANSPORTATION

WIDE-FLANGE SIGN SUPPORT AND PANEL SIGN DRAWING INDEX

SEPTEMBER 2017

STANDARD DRAWING NO. E 802-SNGP-01

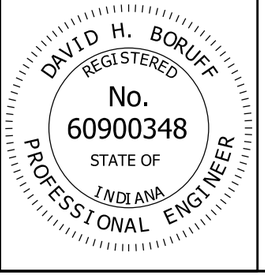

/s/ David H. Boruff *03/17/17*
DESIGN STANDARDS ENGINEER DATE

/s/ John Leckie *04/10/17*
CHIEF ENGINEER DATE

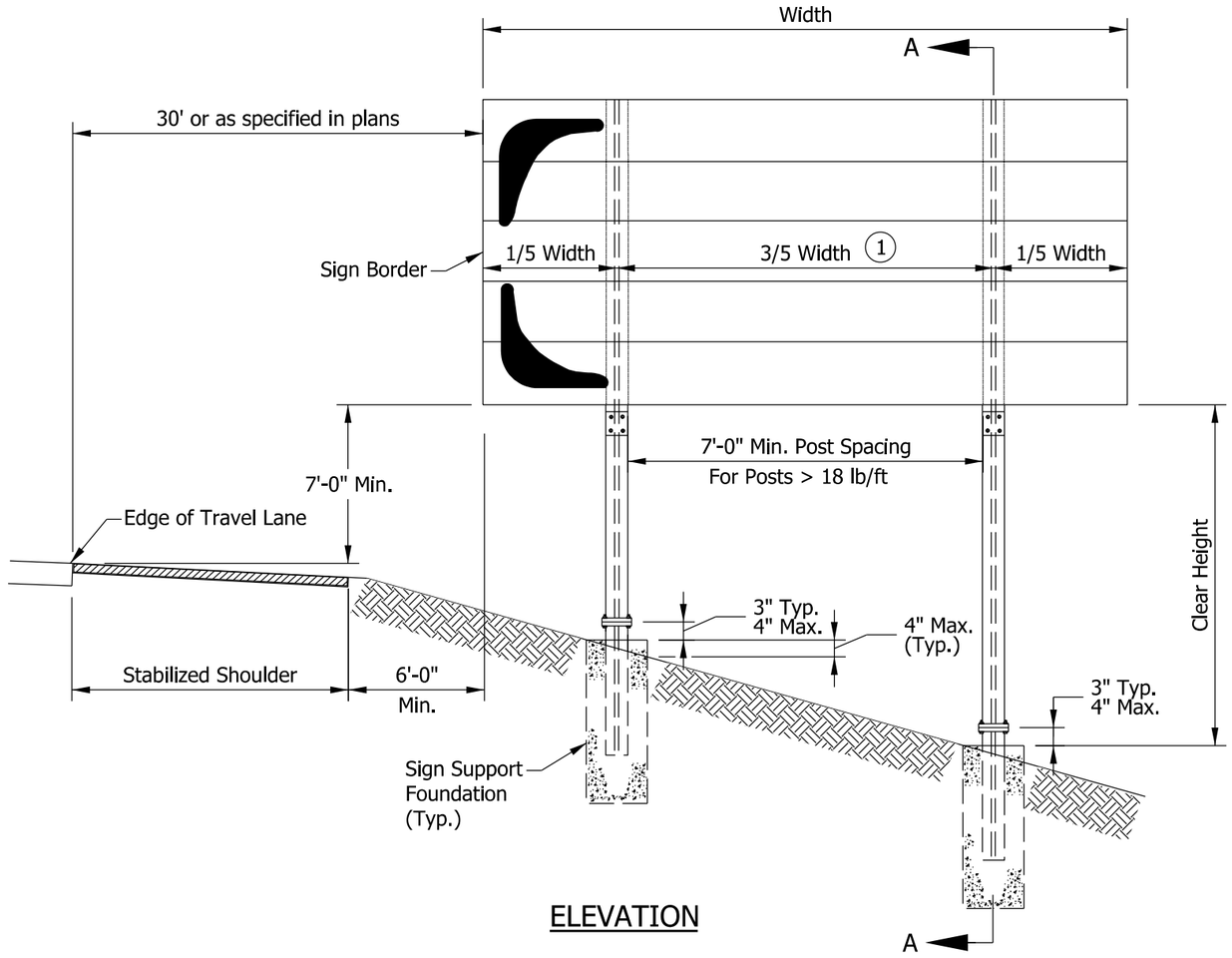

ELEVATION

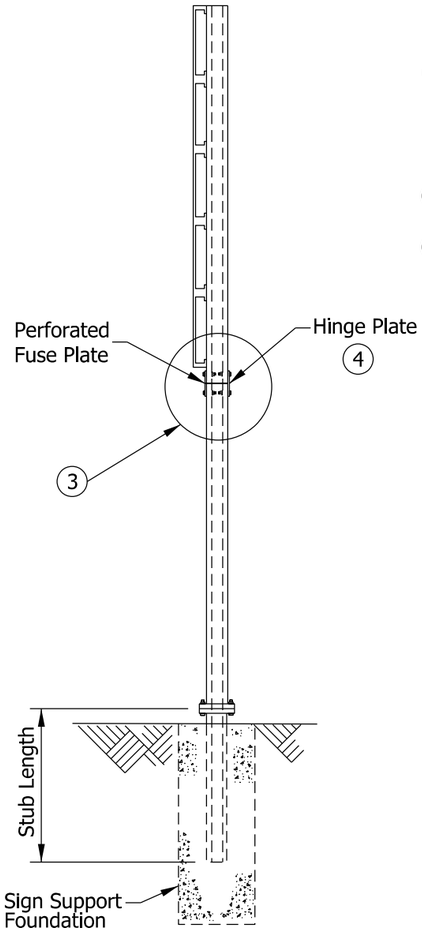

SECTION A-A

NOTES:

1. For beams that have a unit weight greater than 18 lbs per foot the minimum beam spacing shall be 7 ft.
2. For sign post clip details see Standard Drawing E 802-SNGP-07.
3. See Detail A on Standard Drawing E 802-SNGP-05.
4. See keynote 3 on Standard Drawing E 802-SNGP-05.
5. Clear height is based on the longest post.

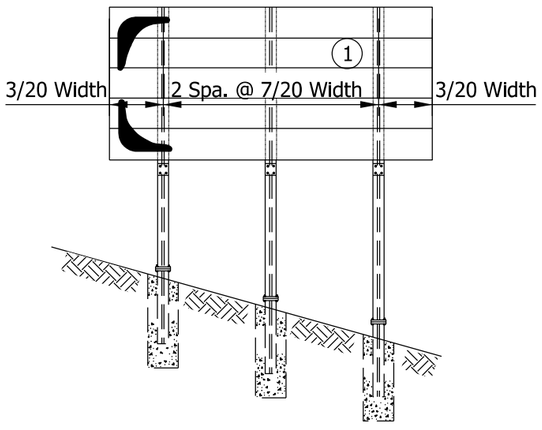

3 BEAM SPACING

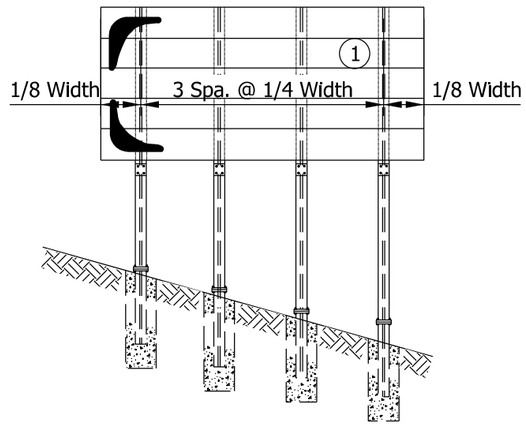

4 BEAM SPACING

INDIANA DEPARTMENT OF TRANSPORTATION

WIDE FLANGE SIGN SUPPORT
PLACEMENT AND POST SPACING

SEPTEMBER 2017

STANDARD DRAWING NO. E 802-SNGP-02

DAVID H. BORUFF
REGISTERED
No. 60900348
STATE OF INDIANA
PROFESSIONAL ENGINEER

/s/ David H. Boruff 03/17/17
DESIGN STANDARDS ENGINEER DATE

/s/ John Leckie 04/10/17
CHIEF ENGINEER DATE

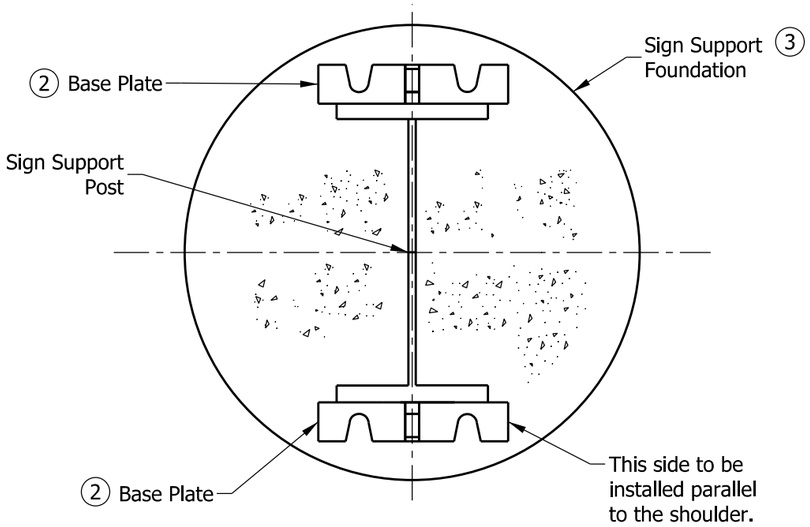

SECTION A-A

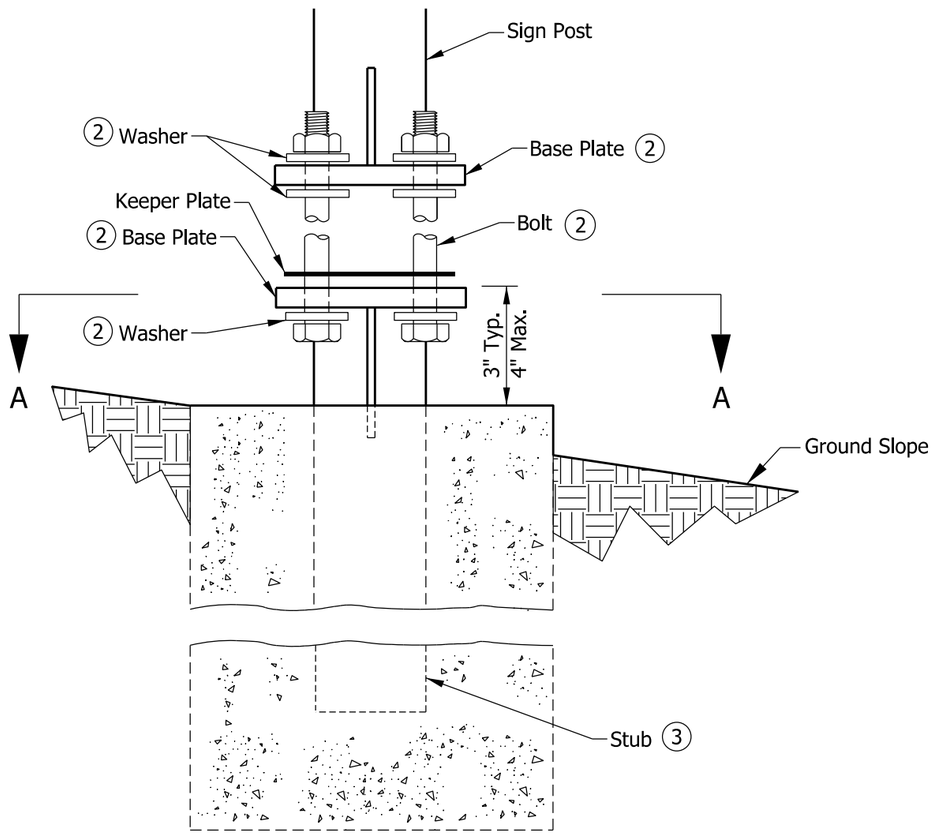

FRONT ELEVATION

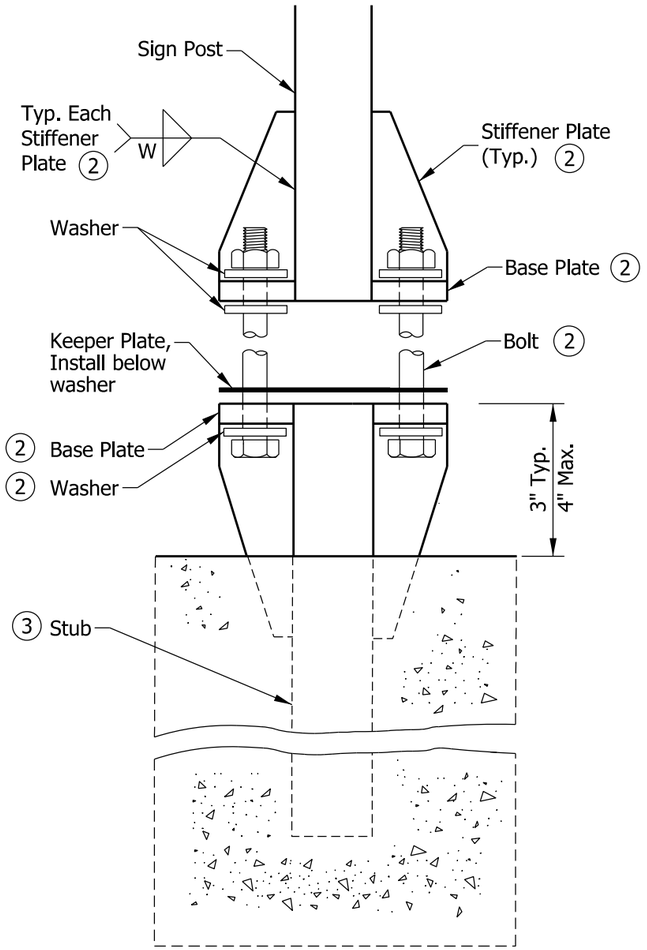

SIDE ELEVATION

NOTES:

1. Stubs shall be plumb and base plate shall be leveled and physically held level until the concrete sets.

(2) See Standard Drawing E 802-SNGP-04 for base plate and stiffener plate details, including weld thickness and bolt diameter.

(3) See Foundation Data table on Standard Drawing E 802-SNGP-16 for stub length and foundation dimensions.

PROCEDURE FOR ASSEMBLY OF BASE CONNECTION:

A. The contractor shall bolt post to stub. One flat washer on each bolt shall be placed between the top of the keeper plate and bottom of the top base plate. Shim as required to plumb post.

B. All bolts shall be tightened in accordance to 711.65(d).

C. Threads at junction with nuts shall be burred using a center punch to prevent nut loosening.

INDIANA DEPARTMENT OF TRANSPORTATION

WIDE-FLANGE SIGN SUPPORT BASE CONNECTION

SEPTEMBER 2017

STANDARD DRAWING NO. E 802-SNGP-03

DAVID H. BORUFF REGISTERED No. 60900348 STATE OF INDIANA PROFESSIONAL ENGINEER

/s/ David H. Boruff 03/17/17
DESIGN STANDARDS ENGINEER DATE

/s/ John Leckie 04/10/17
CHIEF ENGINEER DATE

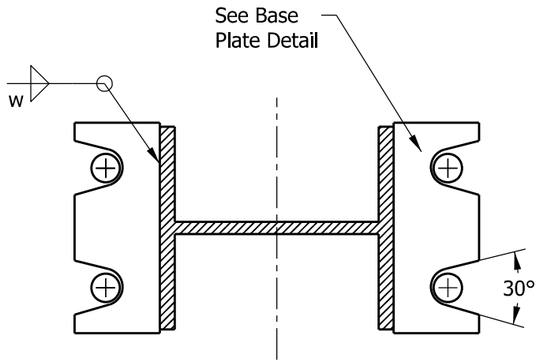

SECTION AT BASE PLATE

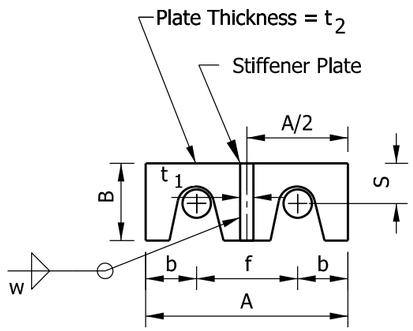

BASE PLATE

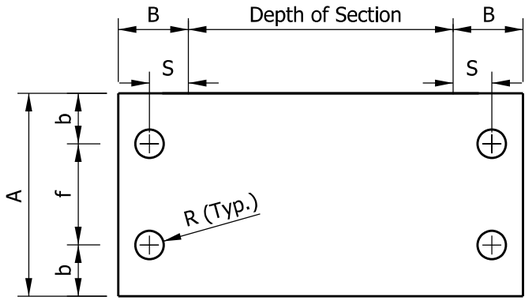

Plate Thickness = 0.0149"
(28 Gauge)

BOLT KEEPER PLATE

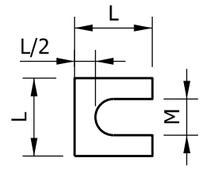

Provide 2 - 0.0149" Thick (28 Gauge)
and 2 - 0.0329" Thick (21 Gauge)
Shims per Post.

SHIM DETAIL

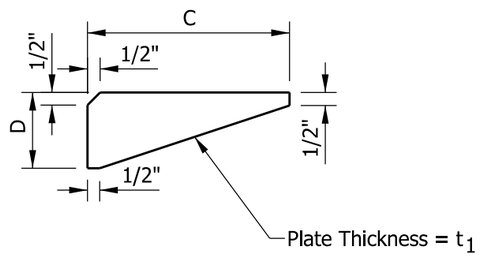

STIFFENER PLATE

BASE CONNECTION DATA													SHIM		Wt. of Base Plate, Stiffener, & Misc. Hardware Per Post (lb)
Post Size	A	B	C	D	Bolt Dia.	Torque (lbf*in)	R	b	f	S	t_1	t_2	w	L	M	
W 6x9	4-1/2"	2"	4-1/2"	2"	1/2"	140 ±20	9/32"	1"	2-1/2"	1-3/8"	1/2"	1/2"	3/16"	1-3/4"	13/16"	8.43
W 6x12	4-3/4"	2"	5-1/8"	2"	5/8"	270 ± 45	3/8"	1-1/8"	2-1/2"	1-3/16"	1/2"	1/2"	1/4"	1-3/8"	11/16"	9.02
W 8x18	5-3/4"	2-3/16"	6-1/4"	2-3/16"	3/4"	445 ± 75	7/16"	1-1/2"	2-3/4"	1-3/8"	1/2"	5/8"	1/4"	1-3/4"	13/16"	13.71
W 8x24	7"	2-3/8"	8"	2-3/8"	3/4"	445 ± 75	7/16"	1-3/4"	3-1/2"	1-3/8"	1/2"	3/4"	5/16"	2-1/8"	13/16"	20.70
W 10x33	8"	2-3/4"	8"	2-3/4"	1"	580 ± 90	9/16"	2"	4"	1-9/16"	1/2"	3/4"	5/16"	2-3/8"	1-1/16"	26.08
W 12x45	8"	3"	8"	3"	1"	580 ± 90	9/16"	2"	4"	1-9/16"	1/2"	3/4"	5/16"	2-3/4"	1-1/16"	28.35

INDIANA DEPARTMENT OF TRANSPORTATION

WIDE-FLANGE SIGN SUPPORT
BASE CONNECTION DIMENSIONS

SEPTEMBER 2017

STANDARD DRAWING NO. E 802-SNGP-04

DAVID H. BORUFF
REGISTERED
No. 60900348
STATE OF INDIANA
PROFESSIONAL ENGINEER

/s/ David H. Boruff 03/17/17
DESIGN STANDARDS ENGINEER DATE

/s/ John Leckie 04/10/17
CHIEF ENGINEER DATE

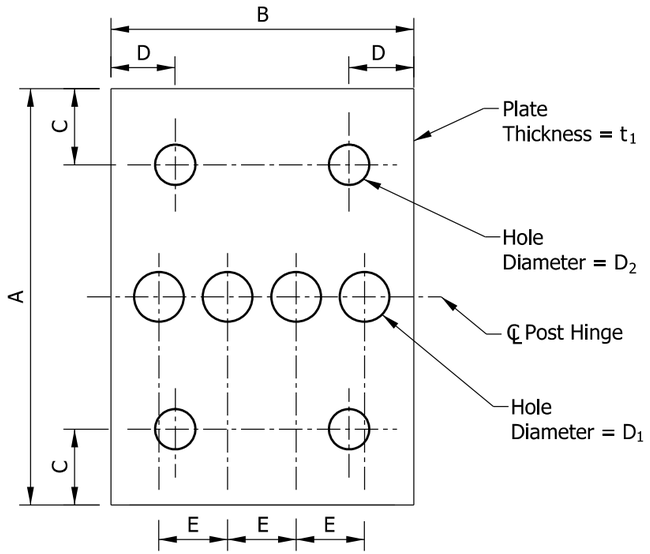

FUSE PLATE

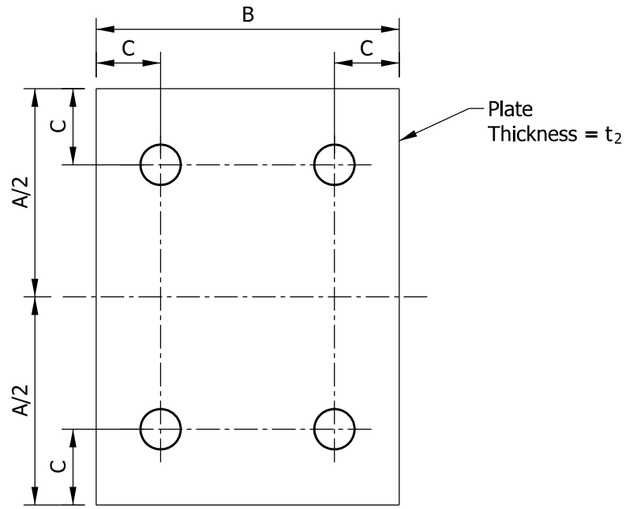

HINGE PLATE

NOTES:

1. The distance from the top of the fuse plate and the hinge plate to the bottom of the sign shall be the same for all posts.
2. The upper and middle W-Beam sections at the fuse plate/hinge plate connection shall fit flush. Any variation shall not exceed 0.0625 in.
3. For assemblies in medians or along undivided highways, perforated fuse plates shall be used on the front and back sides of the upper joint.

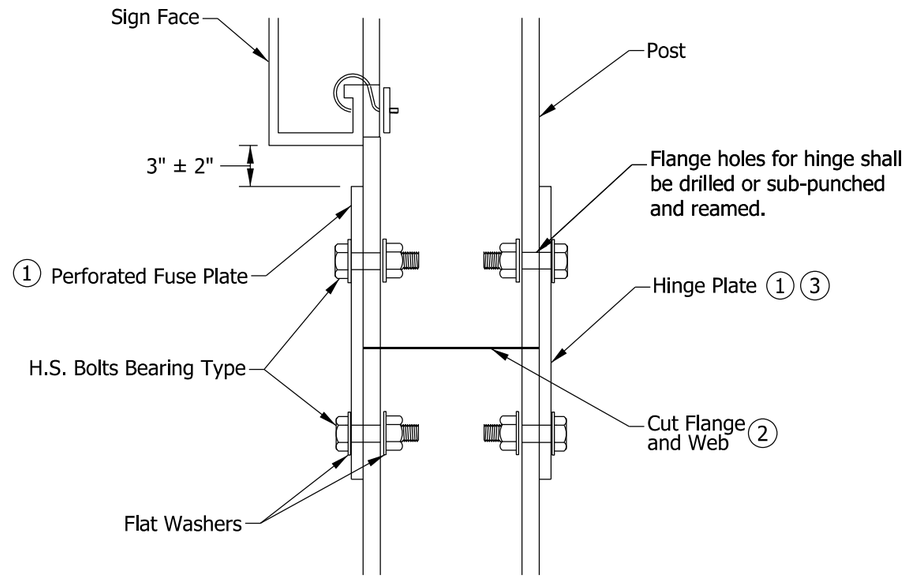

DETAIL A

FUSE AND HINGE PLATE DATA

Post Size	A	B	C	D	E	t_1 fuse plate	t_2 hinge plate	D_1	D_2	Bolt Diameter	Wt. of Fuse Plate & Hinge Plate Per Post (lb)	Bolt Tension (lbs)
W 6x9	4-1/4"	4"	1-1/8"	7/8"	1"	1/4"	1/4"	3/4"	9/16"	1/2"	4.80	12,050
W 6x12	7-1/4"	4"	1-1/4"	7/8"	15/16"	3/8"	3/8"	13/16"	11/16"	5/8"	6.16	19,200
W 8x18	8-1/4"	5-1/4"	1-3/8"	1-1/8"	1-1/4"	3/8"	3/8""	1"	13/16"	3/4"	9.20	28,400
W 8x24	8-1/4"	6-1/2"	1-3/8"	1-1/2"	1-1/2"	1/2"	1/2"	1"	13/16"	3/4"	15.20	28,400
W 10x33	9-1/4"	8"	2"	1-3/4"	1-3/4"	5/8"	5/8"	1-1/8"	1-1/16"	1"	26.20	39,250
W 12x45	11"	8"	2"	1-3/4"	1-3/4"	3/4"	3/4"	1-5/16"	1-1/16"	1"	37.40	51,500

INDIANA DEPARTMENT OF TRANSPORTATION

WIDE-FLANGE SIGN SUPPORT FUSE/HINGE PLATE CONNECTION

SEPTEMBER 2017

STANDARD DRAWING NO. E 802-SNGP-05

DAVID H. BORUFF REGISTERED No. 60900348 STATE OF INDIANA PROFESSIONAL ENGINEER

/s/ David H. Boruff 03/17/17
DESIGN STANDARDS ENGINEER DATE

/s/ John Leckie 04/10/17
CHIEF ENGINEER DATE

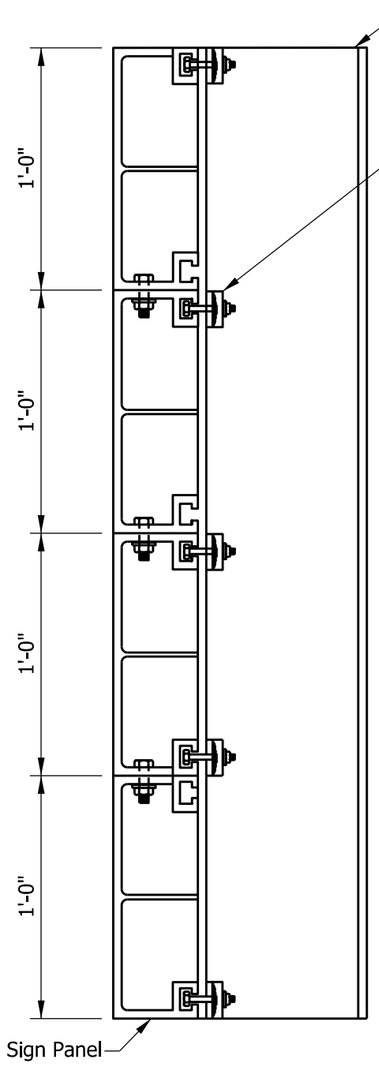

SECTION B-B

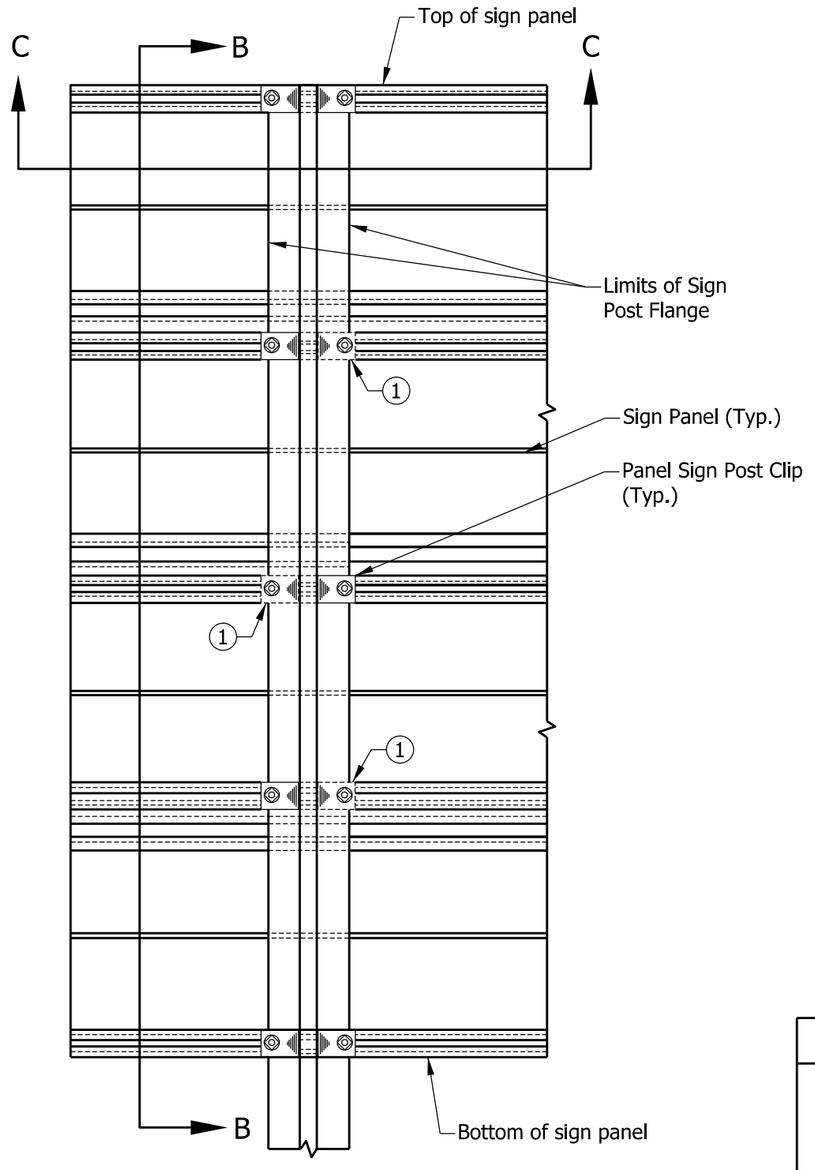

ELEVATION
(View from Back of Sign)

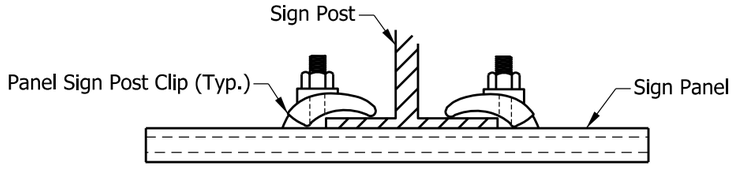

DETAIL A

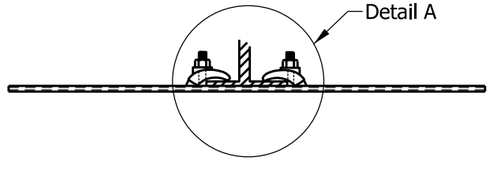

SECTION C-C

NOTES:

1. These clips are not required for signs less than 24 ft. in width. See Standard Drawing E 802-SNGP-07 for Post Clip details.

INDIANA DEPARTMENT OF TRANSPORTATION

PANEL SIGN CONNECTION DETAILS

SEPTEMBER 2017

STANDARD DRAWING NO. E 802-SNGP-06

DAVID H. BORUFF
REGISTERED
No. 60900348
STATE OF INDIANA
PROFESSIONAL ENGINEER

/s/ David H. Boruff 03/17/17
DESIGN STANDARDS ENGINEER DATE

/s/ John Leckie 04/10/17
CHIEF ENGINEER DATE

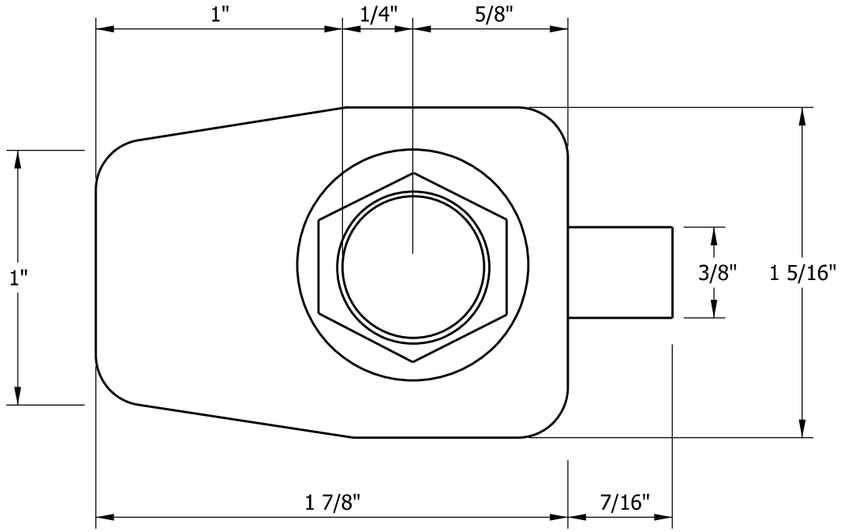

PLAN VIEW

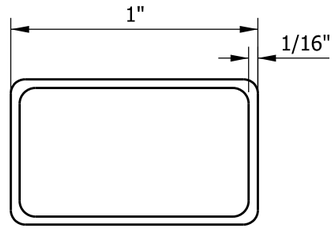

TOP VIEW

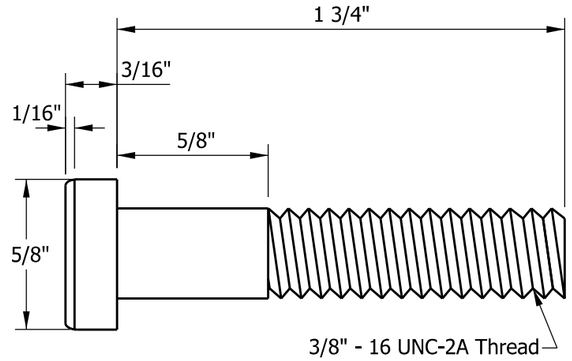

SIDE VIEW

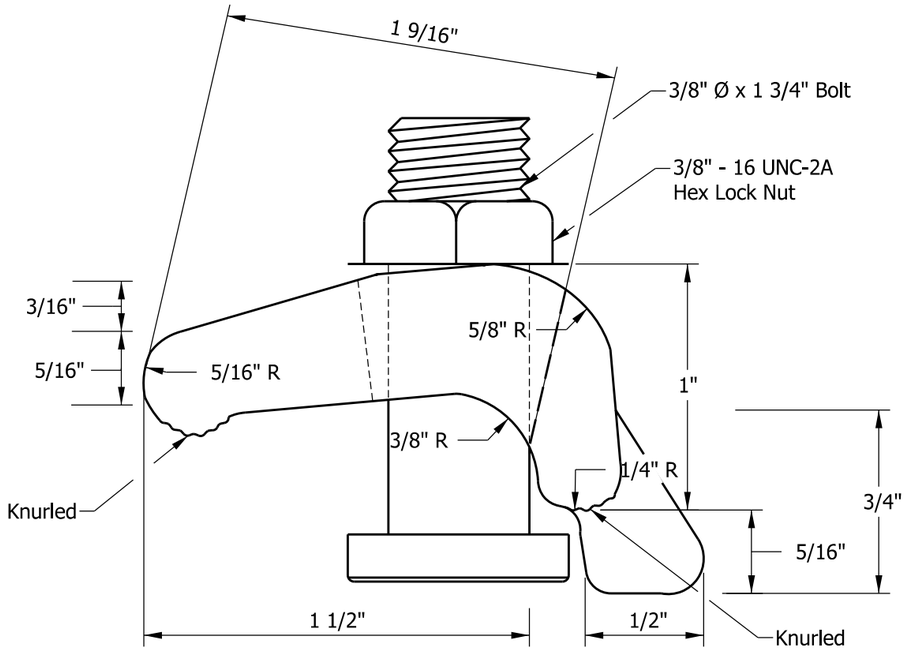

ELEVATION

POST CLIP BOLT

INDIANA DEPARTMENT OF TRANSPORTATION

PANEL SIGN POST CLIP

SEPTEMBER 2017

STANDARD DRAWING NO. E 802-SNGP-07

DAVID H. BORUFF REGISTERED No. 60900348 STATE OF INDIANA PROFESSIONAL ENGINEER

/s/ David H. Boruff 03/17/17
DESIGN STANDARDS ENGINEER DATE

/s/ John Leckie 04/10/17
CHIEF ENGINEER DATE

Sign Width (ft)

Sign Height (ft)

	6	8	10	12	14	16	18	20	22	24	26	28	30
4	2- W6x9	2- W6x9	2- W6x9	2- W6x9	2- W6x9	2- W6x9	2- W6x9	2- W6x9	2- W6x9	2- W6x9	2- W6x9	2- W6x9	2- W6x9
6	2- W6x9	2- W6x9	2- W6x9	2- W6x9	2- W6x9	2- W6x9	2- W6x9	2- W6x9	2- W6x9	2- W6x12	2- W6x12	2- W6x12	2- W6x12
8	2- W6x9	2- W6x9	2- W6x9	2- W6x9	2- W6x9	2- W6x9	2- W8x18	2- W8x18	2- W8x18	2- W8x18	2- W8x18	2- W8x18	2- W8x18
10	2- W6x9	2- W6x9	2- W6x9	2- W8x18	2- W8x18	2- W8x18	2- W8x18	2- W8x18	2- W8x18	2- W8x18	2- W8x18	2- W8x18	2- W8x18
12	2- W6x9	2- W8x18	2- W8x18	2- W8x18	2- W8x18	2- W8x18	2- W8x18	2- W8x18	2- W8x24	2- W8x24	2- W8x24	2- W10x33	2- W10x33
14	2- W8x18	2- W8x18	2- W8x18	2- W8x18	2- W8x18	2- W8x24	2- W8x24	2- W8x24	2- W8x24	2- W10x33	2- W10x33	2- W10x33	2- W10x33
16	2- W8x18	2- W8x18	2- W8x18	2- W8x24	2- W8x24	2- W8x24	2- W10x33	2- W10x33	2- W10x33	2- W10x33	2- W10x33	2- W10x33	2- W10x33
18	2- W8x18	2- W8x18	2- W8x24*	2- W8x24	2- W8x24	2- W10x33	2- W10x33	2- W10x33	2- W10x33	2- W10x33	2- W10x33	2- W10x33	2- W10x33
20	2- W8x18	X	2- W8x24*	2- W8x24	2- W10x33	2- W10x33	2- W10x33	2- W10x33	2- W10x33	2- W10x33	2- W10x33	2- W12x45	2- W12x45
22	X	X	2- W8x24*	2- W10x33	2- W10x33	2- W10x33	2- W10x33	2- W10x33	2- W10x33	2- W12x45	2- W12x45	3- W10x33	3- W10x33
24	X	X	2- W10x33*	2- W10x33	2- W10x33	2- W10x33	2- W10x33	2- W10x33	2- W12x45	2- W12x45	3- W10x33	3- W10x33	4- W10x33
26	X	X	2- W10x33*	2- W10x33	2- W10x33	2- W10x33	2- W12x45	2- W12x45	3- W10x33	3- W10x33	4- W10x33*	4- W10x33	4- W10x33
28	X	X	2- W10x33*	2- W10x33	2- W10x33	2- W12x45	2- W12x45	3- W10x33	X	X	4- W10x33*	4- W10x33*	X
30	X	X	2- W10x33*	2- W10x33	2- W12x45	2- W12x45	X	X	X	X	X	X	X

X Standard size not available

* Post spacing shall be 7'-0"

NOTES:

1. Clear height is the distance from the top of foundation to bottom of sign.
2. Table entries are number of posts- post size.
3. Sign dimensions and clear height should be rounded up to the nearest even number.

INDIANA DEPARTMENT OF TRANSPORTATION

WIDE-FLANGE SIGN SUPPORT
POST SELECTION TABLE
CLEAR HEIGHT = 8 FT

SEPTEMBER 2017

STANDARD DRAWING NO. E 802-SNGP-08

DAVID H. BORUFF
REGISTERED
No. 60900348
STATE OF INDIANA
PROFESSIONAL ENGINEER

/s/ David H. Boruff 03/17/17
DESIGN STANDARDS ENGINEER DATE

/s/ John Leckie 04/10/17
CHIEF ENGINEER DATE

Sign Width (ft)

Sign Height (ft)	6	8	10	12	14	16	18	20	22	24	26	28	30
4	2- W6x9	2- W6x9	2- W6x9	2- W6x9	2- W6x9	2- W6x9	2- W6x9	2- W6x9	2- W6x9	2- W6x9	2- W6x9	2- W6x12	2- W6x12
6	2- W6x9	2- W6x9	2- W6x9	2- W6x9	2- W6x9	2- W6x9	2- W6x12	2- W6x12	2- W6x12	2- W6x12	2- W8x18	2- W8x18	2- W8x18
8	2- W6x9	2- W6x9	2- W6x9	2- W6x12	2- W6x12	2- W6x12	2- W8x18	2- W8x18	2- W8x18	2- W8x18	2- W8x18	2- W8x18	2- W8x18
10	2- W6x9	2- W6x12	2- W6x12	2- W8x18	2- W8x18	2- W8x18	2- W8x18	2- W8x18	2- W8x18	2- W8x18	2- W8x18	2- W8x18	2- W8x18
12	2- W6x12	2- W8x18	2- W8x18	2- W8x18	2- W8x18	2- W8x18	2- W8x18	2- W8x18	2- W8x24	2- W10x33	2- W10x33	2- W10x33	2- W10x33
14	2- W8x18	2- W8x18	2- W8x18	2- W8x18	2- W8x18	2- W8x24	2- W8x24	2- W10x33	2- W10x33	2- W10x33	2- W10x33	2- W10x33	2- W10x33
16	2- W8x18	2- W8x18	2- W8x18	2- W8x24	2- W8x24	2- W8x24	2- W10x33	2- W10x33	2- W10x33	2- W10x33	2- W10x33	2- W10x33	2- W10x33
18	2- W8x18	2- W8x18	2- W8x24*	2- W8x24	2- W10x33	2- W10x33	2- W10x33	2- W10x33	2- W10x33	2- W10x33	2- W10x33	2- W10x33	2- W12x45
20	2- W8x18	X	2- W8x24*	2- W10x33	2- W10x33	2- W10x33	2- W10x33	2- W10x33	2- W10x33	2- W10x33	2- W12x45	2- W12x45	3- W10x33
22	X	X	2- W10x33*	2- W10x33	2- W10x33	2- W10x33	2- W10x33	2- W10x33	2- W10x33	2- W12x45	3- W10x33	3- W10x33	3- W10x33
24	X	X	2- W10x33*	2- W10x33	2- W10x33	2- W10x33	2- W10x33	2- W12x45	3- W10x33	3- W10x33	3- W10x33	4- W10x33	4- W10x33
26	X	X	2- W10x33*	2- W10x33	2- W10x33	2- W12x45	2- W12x45	3- W10x33	3- W10x33	X	4- W10x33*	4- W10x33	4- W10x33
28	X	X	2- W10x33*	2- W10x33	2- W12x45	2- W12x45	3- W10x33*	3- W10x33	X	X	4- W10x33*	4- W10x33	X
30	X	X	2- W10x33*	2- W10x33	2- W12x45	X	X	X	X	X	X	X	X

X Standard size not available

* Post spacing shall be 7'-0"

NOTES:

1. Clear height is the distance from the top of foundation to bottom of sign.
2. Table entries are number of posts- post size.
3. Sign dimensions and clear height should be rounded up to the nearest even number.

INDIANA DEPARTMENT OF TRANSPORTATION

WIDE-FLANGE SIGN SUPPORT
POST SELECTION TABLE
CLEAR HEIGHT = 10 FT
SEPTEMBER 2017

STANDARD DRAWING NO. E 802-SNGP-09

DAVID H. BORUFF REGISTERED No. 60900348 STATE OF INDIANA PROFESSIONAL ENGINEER

/s/ David H. Boruff 03/17/17
DESIGN STANDARDS ENGINEER DATE

/s/ John Leckie 04/10/17
CHIEF ENGINEER DATE

Sign Width (ft)

Sign Height (ft)	6	8	10	12	14	16	18	20	22	24	26	28	30
4	2- W6x9	2- W6x9	2- W6x9	2- W6x9	2- W6x9	2- W6x9	2- W6x9	2- W6x12	2- W6x12	2- W6x12	2- W6x12	2- W6x12	2- W8x18
6	2- W6x9	2- W6x9	2- W6x9	2- W6x12	2- W6x12	2- W6x12	2- W6x12	2- W8x18	2- W8x18	2- W8x18	2- W8x18	2- W8x18	2- W8x18
8	2- W6x9	2- W6x12	2- W6x12	2- W8x18	2- W8x18	2- W8x18	2- W8x18	2- W8x18	2- W8x18	2- W8x18	2- W8x18	2- W8x18	2- W8x18
10	2- W6x12	2- W8x18	2- W8x18	2- W8x18	2- W8x18	2- W8x18	2- W8x18	2- W8x18	2- W8x18	2- W8x24	2- W8x24	2- W10x33	2- W10x33
12	2- W8x18	2- W8x18	2- W8x18	2- W8x18	2- W8x18	2- W8x18	2- W8x24	2- W8x24	2- W10x33	2- W10x33	2- W10x33	2- W10x33	2- W10x33
14	2- W8x18	2- W8x18	2- W8x18	2- W8x18	2- W8x24	2- W8x24	2- W10x33	2- W10x33	2- W10x33	2- W10x33	2- W10x33	2- W10x33	2- W10x33
16	2- W8x18	2- W8x18	2- W8x24*	2- W8x24	2- W10x33	2- W10x33	2- W10x33	2- W10x33	2- W10x33	2- W10x33	2- W10x33	2- W10x33	2- W10x33
18	2- W8x18	X	2- W8x24*	2- W10x33	2- W10x33	2- W10x33	2- W10x33	2- W10x33	2- W10x33	2- W10x33	2- W12x45	2- W12x45	3- W10x33
20	X	X	2- W8x33*	2- W10x33	2- W10x33	2- W10x33	2- W10x33	2- W10x33	2- W12x45	2- W12x45	3- W10x33	3- W10x33	3- W10x33
22	X	X	2- W10x33*	2- W10x33	2- W10x33	2- W10x33	2- W10x33	2- W12x45	2- W12x45	3- W10x33	3- W10x33	3- W12x45	3- W12x45
24	X	X	2- W10x33*	2- W10x33	2- W10x33	2- W10x33	2- W12x45	3- W10x33	3- W10x33	3- W10x33	4- W10x33*	4- W10x33	4- W10x33
26	X	X	2- W10x33*	2- W10x33	2- W10x33	2- W12x45	3 W10x33*	3- W10x33	X	X	4- W10x33*	4- W10x33	4- W12x45
28	X	X	2- W10x33*	2- W10x33	2- W12x45	X	X	X	X	X	X	X	X
30	X	X	2- W10x33*	2- W12x45	X	X	X	X	X	X	X	X	X

X Standard size not available

* Post spacing shall be 7'-0"

NOTES:

1. Clear height is the distance from the top of foundation to bottom of sign.
2. Table entries are number of posts- post size.
3. Sign dimensions and clear height should be rounded up to the nearest even number.

INDIANA DEPARTMENT OF TRANSPORTATION

WIDE-FLANGE SIGN SUPPORT
POST SELECTION TABLE
CLEAR HEIGHT = 12 FT
SEPTEMBER 2017

STANDARD DRAWING NO. E 802-SNGP-10

DAVID H. BORUFF
REGISTERED
No.
60900348
STATE OF
INDIANA
PROFESSIONAL ENGINEER

/s/ David H. Boruff 03/17/17
DESIGN STANDARDS ENGINEER DATE

/s/ John Leckie 04/10/17
CHIEF ENGINEER DATE

Sign Width (ft)

Sign Height (ft)

	6	8	10	12	14	16	18	20	22	24	26	28	30
4	2- W6x9	2- W6x9	2- W6x9	2- W6x12	2- W6x12	2- W6x12	2- W6x12	2- W6x12	2- W8x18	2- W8x18	2- W8x18	2- W8x18	2- W8x18
6	2- W6x9	2- W6x12	2- W6x12	2- W8x18	2- W8x18	2- W8x18	2- W8x18	2- W8x18	2- W8x18	2- W8x18	2- W8x18	2- W8x18	2- W8x18
8	2- W6x12	2- W8x18	2- W8x18	2- W8x18	2- W8x18	2- W8x18	2- W8x18	2- W8x18	2- W8x18	2- W8x24	2- W8x24	2- W8x24	2- W8x24
10	2- W8x18	2- W8x18	2- W8x18	2- W8x18	2- W8x18	2- W8x18	2- W8x24	2- W8x24	2- W8x24	2- W10x33	2- W10x33	2- W10x33	2- W10x33
12	2- W8x18	2- W8x18	2- W8x18	2- W8x18	2- W8x24	2- W8x24	2- W8x24	2- W10x33	2- W10x33	2- W10x33	2- W10x33	2- W10x33	2- W10x33
14	2- W8x18	2- W8x18	2- W8x24*	2- W8x24	2- W8x24	2- W10x33	2- W10x33	2- W10x33	2- W10x33	2- W10x33	2- W10x33	2- W10x33	2- W10x33
16	2- W8x18		2- W8x24*	2- W8x24*	2- W10x33	2- W10x33	2- W10x33	2- W10x33	2- W10x33	2- W10x33	2- W10x33	3- W10x33	3- W10x33
18			2- W8x24*	2- W10x33	2- 10x33	2- W10x33	2- W10x33	2- W10x33	2- W10x33	3- W10x33	3- W10x33	3- W10x33	3- W10x33
20			2- W10x33*	2- W10x33	2- W10x33	2- W10x33	2- W10x33	2- W10x33	3- W10x33	3- W10x33	3- W10x33	3- W10x33	4- W10x33
22			2- W10x33*	2- W10x33	2- W10x33	2- W10x33	3- W10x33*	2- W10x33	3- W10x33	3- W10x33	4- W10x33*	4- W10x33	4- W10x33
24			2- W10x33*	2- W10x33	2- W10x33		3- W10x33*	3- W10x33			4- W10x33*	4- W10x33	
26			2- W10x33*	2- W10x33									
28			2- W10x33*										

⨯ Standard size not available

* Post spacing shall be 7'-0"

NOTES:

1. Clear height is the distance from the top of foundation to bottom of sign.
2. Table entries are number of posts- post size.
3. Sign dimensions and clear height should be rounded up to the nearest even number.

INDIANA DEPARTMENT OF TRANSPORTATION

WIDE-FLANGE SIGN SUPPORT
POST SELECTION TABLE
CLEAR HEIGHT = 14 FT
SEPTEMBER 2017

STANDARD DRAWING NO. E 802-SNGP-11

DAVID H. BORUFF REGISTERED No. 60900348 STATE OF INDIANA PROFESSIONAL ENGINEER

/s/ David H. Boruff 03/17/17
DESIGN STANDARDS ENGINEER DATE

/s/ John Leckie 04/10/17
CHIEF ENGINEER DATE

Sign Width (ft)

Sign Height (ft)	6	8	10	12	14	16	18	20	22	24	26	28	30
4	2- W6x12	2- W6x12	2- W6x12	2- W6x12	2- W8x18	2- W8x18	2- W8x18	2- W8x18	2- W8x18	2- W8x18	2- W8x18	2- W8x18	2- W8x18
6	2- W6x12	2- W8x18	2- W8x18	2- W8x18	2- W8x18	2- W8x18	2- W8x18	2- W8x18	2- W8x18	2- W8x18	2- W8x24	2- W8x24	2- W8x24
8	2- W8x18	2- W8x18	2- W8x18	2- W8x18	2- W8x18	2- W8x24	2- W8x24	2- W8x24	2- W8x24	2- W8x24	2- W8x24	2- W10x33	2- W10x33
10	2- W8x18	2- W8x18	2- W8x18	2- W8x24	2- W8x24	2- W8x24	2- W8x24	2- W8x24	2- W10x33	2- W10x33	2- W10x33	2- W10x33	2- W10x33
12	2- W8x18		2- W8x24*	2- W8x24	2- W8x24	2- W8x24	2- W10x33	2- W10x33	2- W10x33	2- W10x33	2- W10x33	2- W10x33	2- W10x33
14			2- W8x24*	2- W8x24	2- W10x33	2- W10x33	2- W10x33	2- W10x33	2- W10x33	2- W10x33	2- W10x33	2- W10x33	3- W10x33
16			2- W8x24*	2- W10x33	2- W10x33	2- W10x33	2- W10x33	2- W10x33	2- W10x33	2- W10x33	3- W10x33	3- W10x33	3- W10x33
18			2- W10x33*	2- W10x33	2- W10x33	2- W10x33	2- W10x33	2- W10x33	3- W10x33	3- W10x33	3- W10x33	3- W10x33	4- W10x33
20			2- W10x33*	2- W10x33	2- W10x33	2- W10x33	3- W10x33*	3- W10x33	3- W10x33		4- W10x33*	4- W10x33	4- W10x33
22			2- W10x33*	2- W10x33	2- W10x33								
24			2- W10x33*										

⨯ Standard size not available
* Post spacing shall be 7'-0"

NOTES:

1. Clear height is the distance from the top of foundation to bottom of sign.
2. Table entries are number of posts- post size.
3. Sign dimensions and clear height should be rounded up to the nearest even number.

INDIANA DEPARTMENT OF TRANSPORTATION

WIDE-FLANGE SIGN SUPPORT
POST SELECTION TABLE
CLEAR HEIGHT = 16 FT

SEPTEMBER 2017

STANDARD DRAWING NO. E 802-SNGP-12

DAVID H. BORUFF REGISTERED No. 60900348 STATE OF INDIANA PROFESSIONAL ENGINEER

/s/ David H. Boruff 03/17/17
DESIGN STANDARDS ENGINEER DATE

/s/ John Leckie 04/10/17
CHIEF ENGINEER DATE

Sign Width (ft)

Sign Height (ft)	6	8	10	12	14	16	18	20	22	24	26	28	30
4	2- W6x12	2- W8x18	2- W8x18	2- W8x18	2- W8x18	2- W8x18	2- W8x18	2- W8x18	2- W8x18	2- W8x18	2- W8x18	2- W8x18	2- W8x24
6	2- W8x18	2- W8x18	2- W8x18	2- W8x18	2- W8x18	2- W8x18	2- W8x24	2- W8x24	2- W8x24	2- W8x24	2- W8x24	2- W8x24	2- W8x24
8	2- W8x18	2- W8x18	2- W8x18	2- W8x24	2- W8x24	2- W8x24	2- W8x24	2- W8x24	2- W10x33	2- W10x33	2- W10x33	2- W10x33	2- W10x33
10	2- W8x18	X	2- W8x24*	2- W8x24	2- W8x24	2- W8x24	2- W8x24	2- W10x33	2- W10x33	2- W10x33	2- W10x33	2- W10x33	2- W10x33
12	X	X	2- W8x24*	2- W8x24	2- W8x24	2- W10x33	2- W10x33	2- W10x33	2- W10x33	2- W10x33	2- W10x33	2- W10x33	2- W10x33
14	X	X	2- W8x24*	2- W10x33	2- W10x33	2- W10x33	2- W10x33	2- W10x33	2- W10x33	2- W10x33	3- W10x33	3- W10x33	3- W10x33
16	X	X	2- W10x33*	2- W10x33	2- W10x33	2- W10x33	2- W10x33	2- W10x33	2- W10x33	2- W10x33	3- W10x33	3- W10x33	4- W10x33
18	X	X	2- W10x33*	2- W10x33	2- W10x33	2- W10x33	3- W10x33*	3- W10x33	3- W10x33	X	4- W10x33*	4- W10x33	4- W10x33
20	X	X	2- W10x33*	2- W10x33	2- W10x33	X	X	X	X	X	X	X	X
22	X	X	2- W10x33*	X	X	X	X	X	X	X	X	X	X

X Standard size not available

* Post spacing shall be 7'-0"

NOTES:

1. Clear height is the distance from the top of foundation to bottom of sign.
2. Table entries are number of posts- post size.
3. Sign dimensions and clear height should be rounded up to the nearest even number.

INDIANA DEPARTMENT OF TRANSPORTATION

WIDE-FLANGE SIGN SUPPORT
POST SELECTION TABLE
CLEAR HEIGHT = 18 FT

SEPTEMBER 2017

STANDARD DRAWING NO. E 802-SNGP-13

DAVID H. BORUFF REGISTERED No. 60900348 STATE OF INDIANA PROFESSIONAL ENGINEER

/s/ David H. Boruff 03/17/17
DESIGN STANDARDS ENGINEER DATE

/s/ John Leckie 04/10/17
CHIEF ENGINEER DATE

Sign Width (ft)

Sign Height (ft)	6	8	10	12	14	16	18	20	22	24	26	28	30
4	2- W8x18	2- W8x18	2- W8x18	2- W8x18	2- W8x18	2- W8x18	2- W8x18	2- W8x24	2- W8x24	2- W8x24	2- W8x24	2- W8x24	2- W8x24
6	2- W8x18	2- W8x18	2- W8x18	2- W8x24	2- W8x24	2- W8x24	2- W8x24	2- W8x24	2- W8x24	2- W8x24	2- W8x24	2- W8x24	3- W8x24
8	2- W8x18	⨯	2- W8x24*	2- W8x24	2- W8x24	2- W8x24	2- W8x24	2- W8x24	3- W8x24	3- W8x24	3- W8x24	3- W8x24	4- W8x24
10	⨯	⨯	2- W8x24*	2- W8x24	2- W8x24	3- W8x24*	3- W8x24*	3- W8x24	⨯	⨯	⨯	⨯	⨯
12	⨯	⨯	2- W8x24*	2- W8x24	⨯	⨯	⨯	⨯	⨯	⨯	⨯	⨯	⨯

⨯ Standard size not available
* Post spacing shall be 7'-0"

NOTES:

1. Clear height is the distance from the top of foundation to bottom of sign.
2. Table entries are number of posts- post size.
3. Sign dimensions and clear height should be rounded up to the nearest even number.

INDIANA DEPARTMENT OF TRANSPORTATION

WIDE-FLANGE SIGN SUPPORT
POST SELECTION TABLE
CLEAR HEIGHT = 20 FT
SEPTEMBER 2017

STANDARD DRAWING NO. E 802-SNGP-14

DAVID H. BORUFF REGISTERED No. 60900348 STATE OF INDIANA PROFESSIONAL ENGINEER

/s/ David H. Boruff 03/17/17
DESIGN STANDARDS ENGINEER DATE

/s/ John Leckie 04/10/17
CHIEF ENGINEER DATE

Sign Width (ft)

Sign Height (ft)	6	8	10	12	14	16	18	20	22	24	26	28	30
4	2- W8x18	2- W8x18	2- W8x18	2- W8x24	2- W8x24	2- W8x24	2- W8x24	2- W8x24	2- W8x24	2- W8x24	2- W8x24	2- W8x24	2- W8x24
6			2- W8x24*	2- W8x24	2- W8x24	2- W8x24	2- W8x24	2- W8x24	2- W8x24	2- W8x24	3- W8x24	3- W8x24	3- W8x24
8			2- W8x24*	2- W8x24	2- W8x24	2- W8x24	3- W8x24*	3- W8x24					
10			2- W8x24*										

⨯ Standard size not available
* Post spacing shall be 7'-0"

NOTES:

1. Clear height is the distance from the top of foundation to bottom of sign.
2. Table entries are number of posts- post size.
3. Sign dimensions and clear height should be rounded up to the nearest even number.

INDIANA DEPARTMENT OF TRANSPORTATION

WIDE-FLANGE SIGN SUPPORT
POST SELECTION TABLE
CLEAR HEIGHT = 22 FT

SEPTEMBER 2017

STANDARD DRAWING NO. E 802-SNGP-15

DAVID H. BORUFF
REGISTERED
No. 60900348
STATE OF INDIANA
PROFESSIONAL ENGINEER

/s/ David H. Boruff 03/17/17
DESIGN STANDARDS ENGINEER DATE

/s/ John Leckie 04/10/17
CHIEF ENGINEER DATE

FOUNDATION DATA					
Type	Post Size	Diameter	Depth	Stub Length	Reinforcement Bars
A	W6x9	2'	7'	4'	8 - #8
A	W6x12	2'	7'	4'	8 - #8
B	W8x18	2'	10'	4'	8 - #8
B	W8x24	2'	10'	4'	8 - #8
C	W10x33	2'-6"	12'	5'	10 - #8
C	W12x45	2'-6"	12'	5'	10 - #8

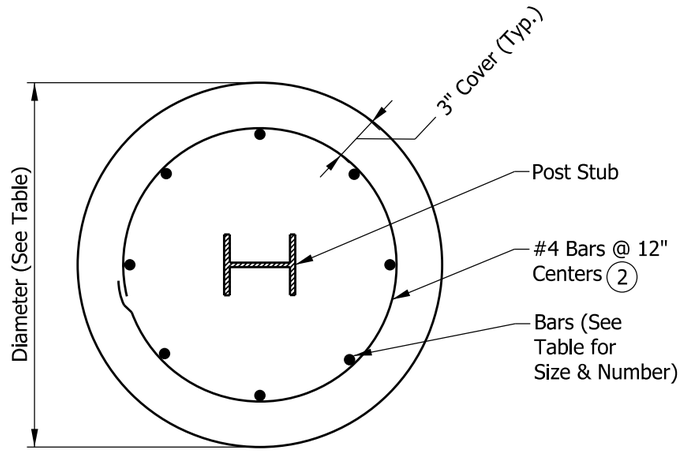

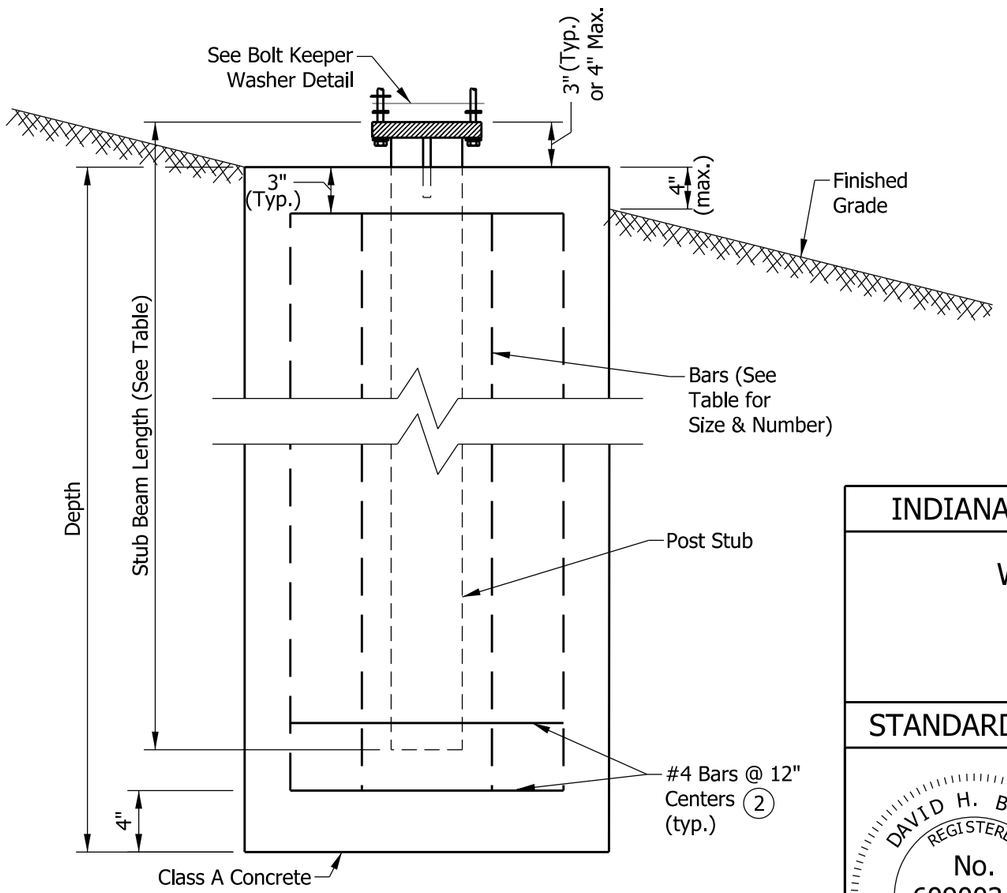

NOTES:

1. All reinforcing shall be grade 60.

(2) At the option of the contractor, D10 spiral wire @ 6" pitch, three flat turns top and one flat turn bottom may be utilized in lieu of #4 bars.

3. Where shop-welded assemblies of foundation stirrup reinforcing bars are used, reinforcing bars shall be in accordance with ASTM Specification A706/706M and holding wires shall be in accordance with ASTM Specification A1064.

INDIANA DEPARTMENT OF TRANSPORTATION

WIDE-FLANGE SIGN SUPPORT FOUNDATION

SEPTEMBER 2017

STANDARD DRAWING NO. E 802-SNGP-16

DAVID H. BORUFF REGISTERED No. 60900348 STATE OF INDIANA PROFESSIONAL ENGINEER

/s/ David H. Boruff 03/17/17
DESIGN STANDARDS ENGINEER DATE

/s/ John Leckie 04/10/17
CHIEF ENGINEER DATE

INDEX

SHEET NO.	SUBJECT
1	Signs Drawing Index and General Notes
2	Route Marker Details, Sheilds and Auxillary Signs
3	Route Marker Details, Arrow and Cardinal Direction Signs
4	Sign Reflectorization Schedule
5	Sign Reflectorization Schedule
6	Miscellaneous Sign Details
7	Steel Sign Posts, Selection Table
8	Steel Sign Posts, Bracing for Signs Greater Than 90"
9	Steel Sign Posts, Anchor Base Details
10	Sign Identification Marking

GENERAL NOTES:

1. Characters sometimes cannot be accommodated within the space available on guide signs. For this situation, the standard series D characters may be reduced to series C. As a second choice, use the next smaller height commonly available.

2. For independent use of sheet signs, a nylon and metal washer shall be placed between each bolt head and the face of the metal sign. See Sign Bolt Detail on Standard Drawing E 802-SNGS-06.

3. Fabrication details for the signs shown shall be found in the Standard Highway Signs and Markings Book. Shop drawings will be supplied on all other signs not found in the publication.

4. See Standard Drawing E 802-SNPL-02 for mounting height and lateral locations of signs.

5. Splicing of flanged channel post will not be permitted.

6. Wherever white is specified as a color, it is understood to include silver-colored reflecting coatings or elements the reflect white light.

INDIANA DEPARTMENT OF TRANSPORTATION

SIGNS
DRAWING INDEX AND GENERAL NOTES

SEPTEMBER 2026

STANDARD DRAWING NO. E 802-SNGS-01

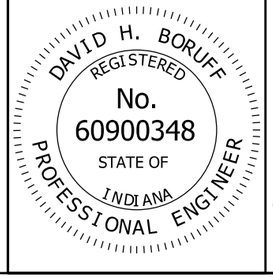

DESIGN STANDARDS ENGINEER — DATE 4/28/2026

CHIEF ENGINEER — DATE 04/29/2026

WHITE BACKGROUND WITH BLACK BORDER AND NUMERALS

M1-4(I)

FOR INDEPENDENT USE ONLY

WHITE BACKGROUND WITH BLACK NUMERALS

M1-4(G)

(G) INDICATES SHIELD TO BE USED ON ALL GUIDE SIGNS AND DOES NOT REQUIRE BLACK BORDER

FOR GUIDE SIGN USE

WHITE BACKGROUND WITH BLACK LETTERS, NUMERALS AND BORDER

M1-5

STATE ROUTE MARKER

WHITE LETTERS, NUMERALS, AND BORDER

M1-1

INTERSTATE SHIELD

M1-4(I), M1-4(G), M1-5, M1-1					
12" NUMERALS		18" NUMERALS		24" NUMERALS	
2 DIGITS	3 DIGITS	2 DIGITS	3 DIGITS	2 DIGITS	3 DIGITS
24" x 24"	30" x 24"	36" x 36"	45" x 36"	48" x 48"	60" x 48"

M2-1P(S)
M2-1P(I)

M4-5P(I)
M4-5P(S)

M4-6P(S)
M4-6P(I)

M4-4P(S)

(I) INDICATES WHITE LEGEND ON BLUE BACKGROUND (INTERSTATE)
(S) INDICATES BLACK LEGEND ON WHITE BACKGROUND (STATE)

STATE	M2-1P(S)		M4-4P(S)		M4-5P(S)		M4-6P(S)	
INTERSTATE	M2-1P(I)				M4-5P(I)		M4-6P(I)	
SHIELD SIZES	24" x 24" 30" x 24"	36" x 36" 45" x 36"	24" x 24" 30" x 24"	36" x 36" 45" x 36"	24" x 24" 30" x 24"	36" x 36" 45" x 36"	24" x 24" 30" x 24"	36" x 36" 45" x 36"
CORRESPONDING SIGN SIZE	21" x 15"		24" x 12"	36" x 18"	24" x 12"	36" x 18"	24" x 12"	36" x 18"

NOTES:

1. All series M(S) "JCT", "TO", "TRUCK", and "END" shall be white background with black legend and border.
2. All series M(I) "JCT", "TO", "TRUCK", and "END" shall be blue background with white legend and border.
3. Center align numbers about vertical centerline of shield.

INDIANA DEPARTMENT OF TRANSPORTATION

ROUTE MARKER DETAILS
SHIELDS AND AUXILLARY SIGNS

SEPTEMBER 2026

STANDARD DRAWING NO. E 802-SNGS-02

DAVID H. BORUFF REGISTERED No. 60900348 STATE OF INDIANA PROFESSIONAL ENGINEER

David H Boruff 4/28/2026
DESIGN STANDARDS ENGINEER DATE

04/29/2026
CHIEF ENGINEER DATE

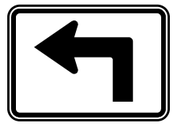

M5-1P (R or L) (I or S)

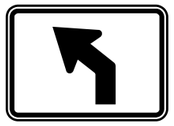

M5-2P (R or L) (I or S)

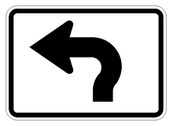

M5-3P (R or L) (I or S)

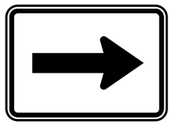

M6-1P (R or L) (I or S)

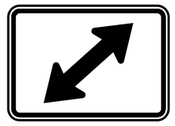

M6-5P (R or L) (I or S)

M6-2P (R or L) (I or S)

M6-3P (I or S)

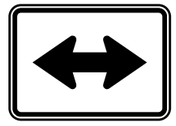

M6-4P (I or S)

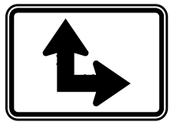

M6-6P (R or L) (I or S)

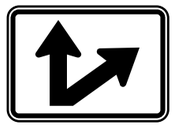

M6-7P (R or L) (I or S)

NOTES:

1. All series M(S) cardinal directions and arrows shall be white background with black legend and border.
2. All series M(I) cardinal directions and arrows shall be blue background with white legend and border.

(3) Make 1st letter 10% taller.

STATE	M5-1P(S) M6-1P(S) M6-3P(S) M6-5P(S) M6-7P(S) M5-2P(S) M5-3P(S) M6-2P(S) M6-4P(S) M6-6P(S)	
INTERSTATE	M5-1P(I) M6-1P(I) M6-3P(I) M6-5P(I) M6-7P(I) M5-2P(I) M5-3P(I) M6-2P(I) M6-4P(I) M6-6P(I)	
SHIELD SIZES	24" x 24" 30" x 24"	36" x 36" 45" x 36"
CORRESPONDING SIGN SIZE	21" x 15"	30" x 21"

M3-1P (3)
(S or I)

M3-2P (3)
(S or I)

M3-3P (3)
(S or I)

M3-4P (3)
(S or I)

STATE	M3-1P(S) M3-2P(S) M3-3P(S) M3-4P(S)			
INTERSTATE	M3-1P(I) M3-2P(I) M3-3P(I) M3-4P(I)			
SHIELD SIZES	24" x 24"	30" x 24"	36" x 36"	45" x 36"
CORRESPONDING SIGN SIZE	24" x 12"	24" x 12"	36" x 18"	36" x 18"

INDIANA DEPARTMENT OF TRANSPORTATION

ROUTE MARKER DETAILS
ARROW AND CARDINAL DIRECTION SIGNS

SEPTEMBER 2026

STANDARD DRAWING NO. E 802-SNGS-03

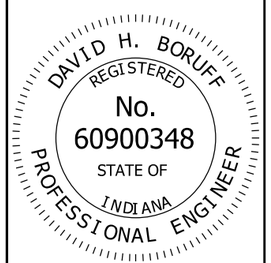

David H Boruff 4/28/2026
DESIGN STANDARDS ENGINEER DATE

04/29/2026
CHIEF ENGINEER DATE

SIGN	REMARKS	BACKGROUND	COPY & BORDER
IGD, IGDO, GD	Directional	S-3-H	B
IGI	Information	S-4-H	B
IGS	Services	S-4-H	B
IGDO, GDO Special Panel	Warning Panel	S-10-H	A
R1-1, R1-3P	Stop Sign and All Way Plaque	S-5-H	S-2-H
R1-2	Yield Sign	S-2-H	S-5-H
R1-5	Yield Here to Pedestrians	S-2-H	S-5-H, O-1-H
R1-6	In-Street Yield Here to Pedestrians	S-10-H	S-2-H, S-5-H, O-1-H
R1-9	Overhead Yield to Pedestrians	S-2-H	S-10-H, O-1-H
R2-3P	Night Speed Limit Plaque	0-1-H	S-2-H
R3-1, R3-2, R3-4, R3-18, R3-27	Movement Prohibition Signs	S-2-H	S-5-H, 0-1-H
R5-1	Do Not Enter	S-5-H	S-2-H
R5-1a	Wrong Way	S-5-H	S-2-H
R5-2, R5-6, R9-13 thru R9-16	Selective Exclusion Signs	S-2-H	S-5-H, 0-1-H
R7-1, R7-4, R7-107, R7-201P	No Parking (Urban)	S-2-H	S-5-H
R7-2a, R7-107a	No Parking (Urban)	S-2-H	S-5-H, 0-1-H
R7-5, R7-5a, R7-108	Restricted Parking	S-2-H	S-7-H
R7-8	Reserved Parking	S-2-H	S-7-H, S-6-H
R8-1, R8-1a, R8-2, R8-3, R8-3b, R8-3c, R8-8	No Parking (Rural)	S-2-H	S-5-H
R8-3a	No Parking (Rural)	S-2-H	S-5-H, 0-1-H
R9-3, R9-4	Pedestrian Signs	S-2-H	S-5-H, 0-1-H
R10-3b thru R10-3i	Pedestrian Pushbutton Signs	S-2-H	S-9-H, 0-1-H
All other regulatory signs		S-2-H	0-1-H
W3-1a, W3-2a	Stop & Yield Ahead	S-10-H	S-2-H, S-5-H, O-1-H
W3-3	Signal Ahead	S-10-H	S-5-H S-7-H, O-1-H
All School Warning Signs		S-11-H	O-1-H
All other warning signs	Except Construction Signs, School Warning Signs	S-10-H	O-1-H
M1-1	Interstate Shields	S-8-H	S-2-H
M1-2, M1-3	Business Shields	S-7-H	S-2-H
M1-4	U.S. Shields	S-2-H	O-1-H
M1-5	State Shields	S-2-H	O-1-H
M1-6	County Shields	S-4-H	S-1-H
M1-7	National Forest	△	S-2-H

BACKGROUND, COPY & BORDER KEY

CODE	DESCRIPTION
0-1-H	Paint (Black) For Use With Prismatic Reflective Sheeting
S-1-H	Prismatic Reflective Sheeting (Yellow)
S-2-H	Prismatic Reflective Sheeting (Silver)
S-3-H	Prismatic Reflective Sheeting (Green)
S-4-H	Prismatic Reflective Sheeting (Blue)
S-5-H	Prismatic Reflective Sheeting (Silver with reverse screen transparent Red)
S-6-H	Prismatic Reflective Sheeting (Silver with reverse screen transparent Blue)
S-7-H	Prismatic Reflective Sheeting (Silver with reverse screen transparent Green)
S-8-H	Prismatic Reflective Sheeting (Silver with reverse screen transparent Red and Blue)
S-9-H	Prismatic Reflective Sheeting (Fluorescent Orange)
S-10-H	Prismatic Reflective Sheeting (Fluorescent Yellow)
S-11-H	Prismatic Reflective Sheeting (Fluorescent Yellow-Green)
A	Cut - Out Letters Which Are Painted Black
B	Cut - Out Letters and Border - White Prismatic Reflective Sheeting
△	Brown Background with Prismatic Reflective Sheeting

SIGN IDENTIFICATION CODES

IGDO	Interstate Guide Directional Overhead
IGD	Interstate Guide Directional
IGS	Interstate Guide Service and Rest Area
IGI	Interstate Guide Information
GDO	Guide Directional Overhead
GD	Guide Directional
R	Regulatory Sign
W	Warning, Construction and Maint. Signs
M	Route Markers and Aux. Markers for Assemblies
D	Destination Sign
I	Information

INDIANA DEPARTMENT OF TRANSPORTATION

SIGN REFLECTORIZATION SCHEDULE

SEPTEMBER 2026

STANDARD DRAWING NO. E 802-SNGS-04

DAVID H. BORUFF REGISTERED No. 60900348 STATE OF INDIANA PROFESSIONAL ENGINEER

DESIGN STANDARDS ENGINEER — DATE 4/28/2026

CHIEF ENGINEER — DATE 04/29/2026

SIGN	REMARKS	BACKGROUND	COPY & BORDER
M2-1P (I), M3-1P (I), M3-2P (I), M3-3P (I), M3-4P (I)	Auxiliary Markers	S-6-H	S-2-H
M4-5P (I), M4-7P (I), M5-1P (I), M5-2P (I)	Auxiliary Markers	S-6-H	S-2-H
M6-1P thru M6-7P	Auxiliary Markers	S-6-H	S-2-H
M4-5P, M4-6P	Auxiliary Markers	S-7-H	S-2-H
M4-8, M4-9	Detour Marker	S-9-H	O-1-H
All Other Marker Auxiliaries		S-2-H	O-1-H
D4-1	Parking	S-2-H	S-7-H
D5 Series, D9 Series, D12 Series	Rest Area, Service, Info	S-6-H	S-2-H
D7-2	Recreation Area	△	S-2-H
All Other Destination Signs		S-3-H	S-2-H
I-17, I-18, I-19		S-6-H	S-2-H
I-20, I-21		S-2-H	O-1-H
All Other I-Signs		S-7-H	S-2-H
All Construction Signs		S-9-H	O-1-H
All Maintenance Signs		S-9-H	O-1-H

BACKGROUND, COPY AND BORDER KEY

CODE	DESCRIPTION
O-1-H	Paint (Black) For Use With Prismatic Reflective Sheeting
S-1-H	Prismatic Reflective Sheeting (Yellow)
S-2-H	Prismatic Reflective Sheeting (Silver)
S-3-H	Prismatic Reflective Sheeting (Green)
S-4-H	Prismatic Reflective Sheeting (Blue)
S-5-H	Prismatic Reflective Sheeting (Silver with reverse screen transparent Red)
S-6-H	Prismatic Reflective Sheeting (Silver with reverse screen transparent Blue)
S-7-H	Prismatic Reflective Sheeting (Silver with reverse screen transparent Green)
S-8-H	Prismatic Reflective Sheeting (Silver with reverse screen transparent Red and Blue)
S-9-H	Prismatic Reflective Sheeting (Fluorescent Orange)
A	Cut - Out Letters Which Are Painted Black
B	Cut - Out Letters And Border - White Prismatic Reflective Sheeting
△	Brown Background With Prismatic Reflective Sheeting

SIGN IDENTIFICATION CODES

IGDO	Interstate Guide Directional Overhead
IGD	Interstate Guide Directional
IGS	Interstate Guide Service and Rest Area
IGI	Interstate Guide Information
GDO	Guide Directional Overhead
GD	Guide Directional
R	Regulatory Sign
W	Warning, Construction and Maint. Signs
M	Route Markers and Aux. Markers for Assemblies
D	Destination Sign
I	Information

INDIANA DEPARTMENT OF TRANSPORTATION

SIGN REFLECTORIZATION SCHEDULE

SEPTEMBER 2026

STANDARD DRAWING NO. E 802-SNGS-05

DAVID H. BORUFF REGISTERED No. 60900348 STATE OF INDIANA PROFESSIONAL ENGINEER

4/28/2026
DESIGN STANDARDS ENGINEER DATE

04/29/2026
CHIEF ENGINEER DATE

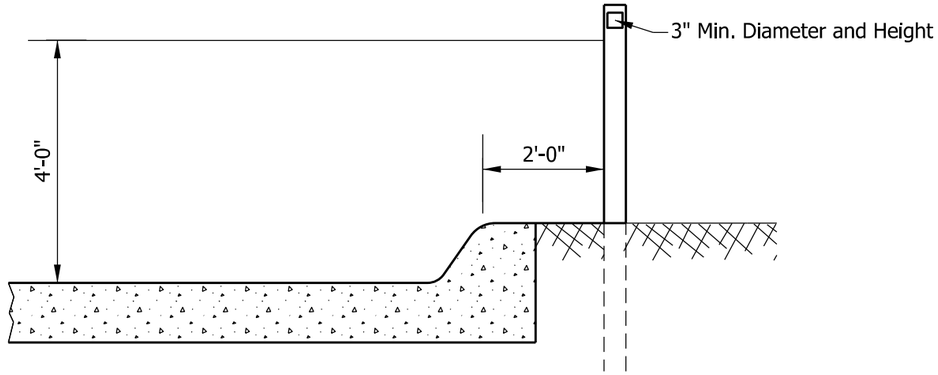

CURB SECTION

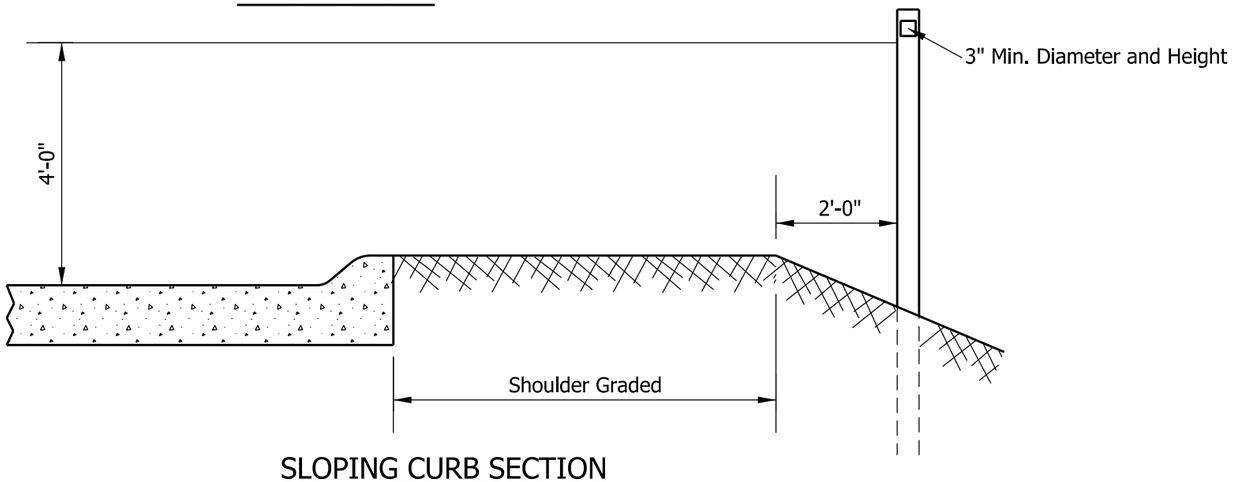

SLOPING CURB SECTION

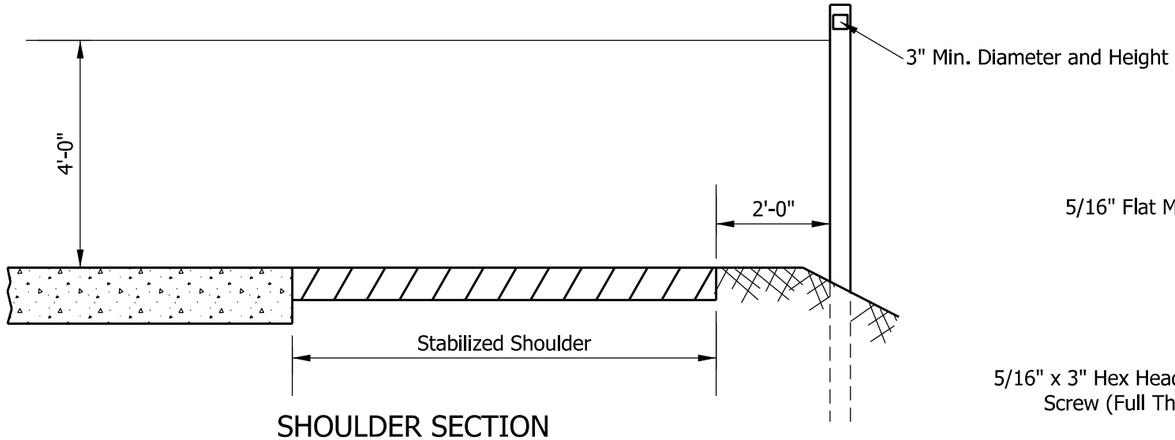

SHOULDER SECTION

DELINEATOR DETAILS (2)

NOTES:

(1) Reference markers shall be installed in accordance with MUTCD.

(2) Delineators shall be selected from the INDOT Qualified Products List.

3. Signs shall be fastened to the posts with bolts, metal and nylon washers and locknut. The nylon washer and the metal washer shall be placed between each bolt head and the face of the sign.

4. Nut shall be tightened sufficiently so that the sign is firmly against the post. However, there shall be no deformation of aluminum sheeting or twisting or damage to the reflective sheeting.

5. Bolt can either be stainless steel or galvanized steel bolt.

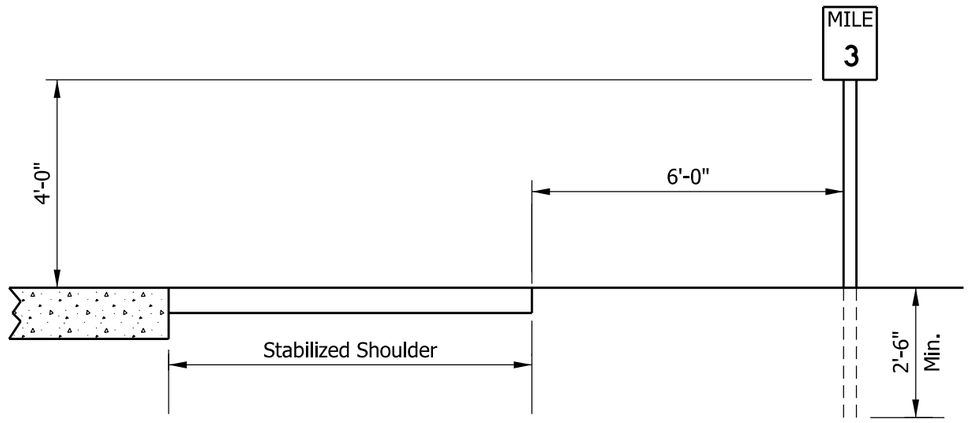

TYPICAL MILE OR REFERENCE POST (1)

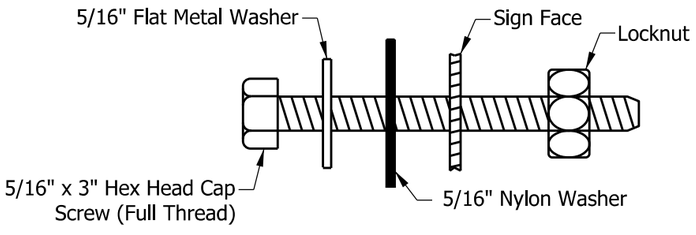

SIGN BOLT DETAIL

INDIANA DEPARTMENT OF TRANSPORTATION

MISCELLANEOUS SIGN DETAILS

SEPTEMBER 2026

STANDARD DRAWING NO. E 802-SNGS-06

DAVID H. BORUFF REGISTERED No. 60900348 STATE OF INDIANA PROFESSIONAL ENGINEER

David H Boruff 4/28/2026

DESIGN STANDARDS ENGINEER DATE

04/29/2026

CHIEF ENGINEER DATE

WIDTH X HEIGHT ("W X H")	MOUNTING HEIGHT							
	5 FT		6 FT		7 FT		8 FT	
	U CHANNEL	SQUARE POST	U CHANNEL	SQUARE POST	U CHANNEL	SQUARE POST	U CHANNEL	SQUARE POST
12 x 12, 12 x 6, 12 x 9 12 x 12, 12 x 18, 12 x 30	1-A	1-Type 1	1-A	1-Type 1	1-A	1-Type 1	1-A	1-Type 1
12 x 36	1-A		1-A		1-A		1-A	
18 x 6, 18 x 12, 18 x 18	1-A		1-A		1-A		1-A	
18 x 24	1-A		1-A		1-A		1-A	
18 x 30	1-A		1-A		1-A		1-A	
18 x 48	1-A		1-A		1-A		1-A	
24 x 12, 24 x 18, 24 x 24	1-A		1-A		1-A		1-A	
24 x 30	1-A		1-A		1-A		1-A	
24 x 36	1-A		1-A		1-A		1-A	
30 x 18	1-A		1-A		1-A		1-A	
30 x 24	1-A		1-A		1-A		1-A	
30 x 30	1-A		1-A		1-A		1-A	
30 x 36	1-A		1-A		1-A		1-A	
30 x 42	1-B		1-B		1-B		1-B	
30 x 48	1-B		1-B		1-B		1-B	
36 x 12	2-A		2-A		2-A		2-A	
36 x 18	2-A		2-A		2-A		2-A	
36 x 24	2-A		2-A		2-A		2-A	
36 x 36	2-A		2-A		2-A		2-A	
36 x 48	2-A		2-A		2-A		2-A	
42 x 18	2-A		2-A		2-A		2-B	
42 x 24	2-A		2-A		2-A		2-A	
42 x 30	2-A		2-A		2-A		2-A	
42 x 36	2-A		2-A		2-A		2-A	
48 x 16	2-A		2-A		2-A		2-A	
48 x 18	2-A		2-A		2-A		2-A	
48 x 24	2-A		2-A		2-A		2-A	
48 x 30	2-A		2-A		2-A		2-A	
48 x 36	2-A	2-Type 2	2-A	2-Type 2	2-A	2-Type 2	2-A	2-Type 2
48 x 48	2-A		2-B		2-B		2-B	
48 x 60	2-B		2-B		2-B		2-B	
60 x 24	2-A		2-A		2-A		2-A	
60 x 30	2-A		2-A		2-A		2-A	
60 x 36	2-A		2-A		2-B		2-B	
60 x 48	2-B		2-B		2-B		2-B	
72 x 24	2-A		2-A		2-A		2-A	
72 x 36	2-B		2-B		2-B		2-B	
90 x 36 120 x 36	2-B	2-Type 3	2-B	2-Type 3	2-B	2-Type 3	2-B	2-Type 3

NOTES:

1. See Standard Drawing E 802-SNGS-08 and -09 for square steel sign post installation details.
2. The Type 1 post shall be 2 1/4 in. x 2 1/4 in. x 12 ga. wall thickness.
3. The Type 2 post shall be 2 in. x 2 in. x 12 ga. wall thickness.
4. The Type 3 post shall be 2 1/2 in. x 2 1/2 in. x 12 ga. wall thickness.
5. Flanged channel posts are as specified and as shown on the plans.

INDIANA DEPARTMENT OF TRANSPORTATION

STEEL SIGN
POST SELECTION TABLE

SEPTEMBER 2017

STANDARD DRAWING NO. E 802-SNGS-07

DAVID H. BORUFF
REGISTERED
No.
60900348
STATE OF
INDIANA
PROFESSIONAL ENGINEER

/s/ David H. Boruff 03/16/17
DESIGN STANDARDS ENGINEER DATE

/s/ John Leckie 04/10/17
CHIEF ENGINEER DATE

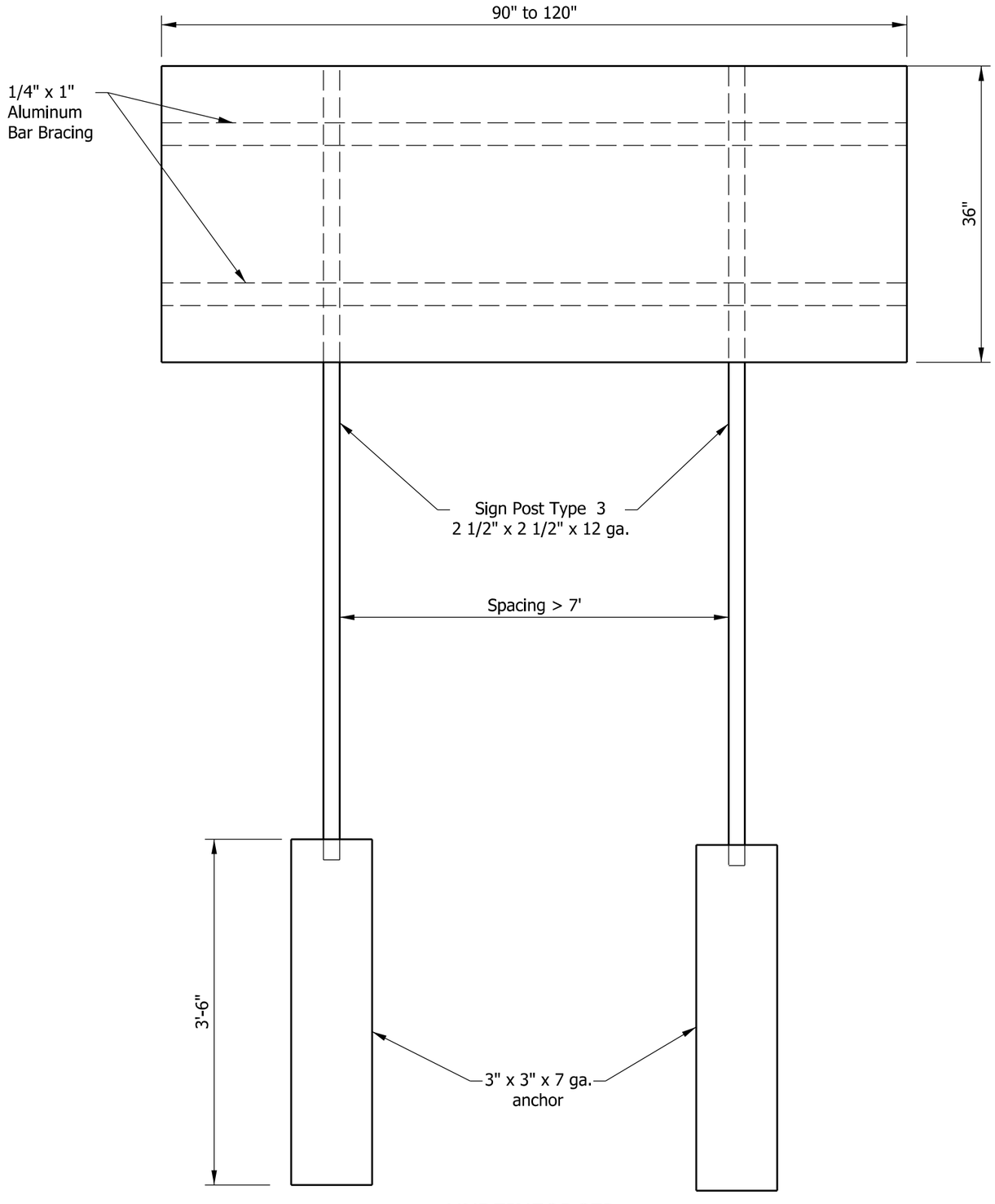

UNREINFORCED
ANCHOR BASE

NOTES:

1. Maximum sign width 120", maximum sign area 30 sq. ft.

INDIANA DEPARTMENT OF TRANSPORTATION

STEEL SIGN POSTS
BRACING FOR SIGNS GREATER THAN 90"

SEPTEMBER 2017

STANDARD DRAWING NO. E 802-SNGS-08

DAVID H. BORUFF
REGISTERED
No.
60900348
STATE OF
INDIANA
PROFESSIONAL ENGINEER

/s/ David H. Boruff 03/16/17
DESIGN STANDARDS ENGINEER DATE

/s/ John Leckie 04/10/17
CHIEF ENGINEER DATE

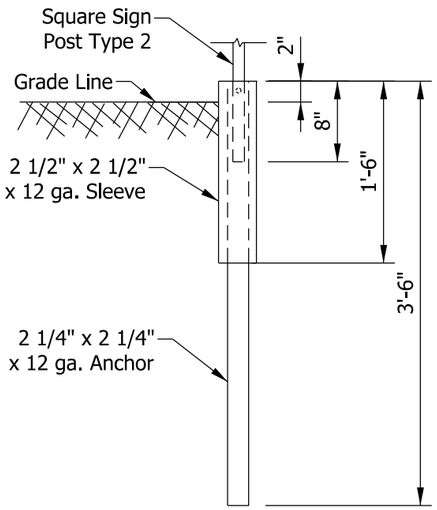

REINFORCED ANCHOR BASE

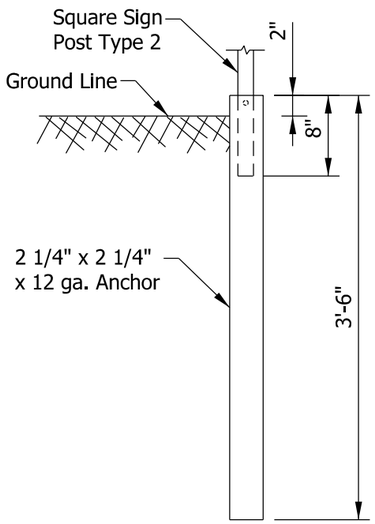

UNREINFORCED ANCHOR BASE

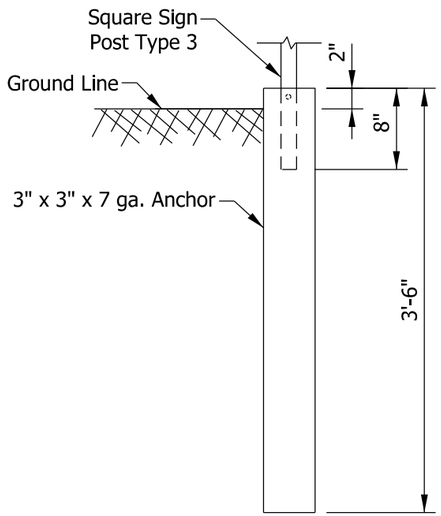

UNREINFORCED ANCHOR BASE

NOTES:

(1) See Standard Drawing E 802-SNGS-07 for sign size and E 802-SNPL-02 for horizontal and vertical sheet sign clearance.

POST	TYPE	WALL THICKNESS	NO. OF POSTS PERMITTED IN 7 ft PATH	EMBEDMENT LENGTH
U-CHANNEL	A, B		1 OR 2	3'-6"
SQUARE	1	12 ga.	1	Anchor Base
	2	12 ga.	1 OR 2	
	3	12 ga.	1	

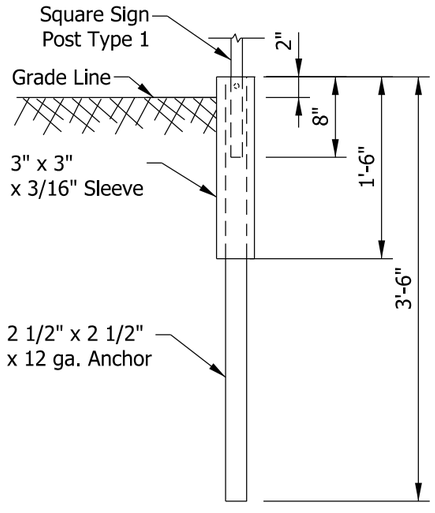

REINFORCED ANCHOR BASE

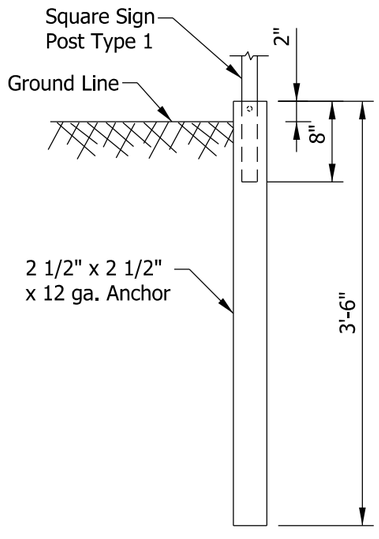

UNREINFORCED ANCHOR BASE

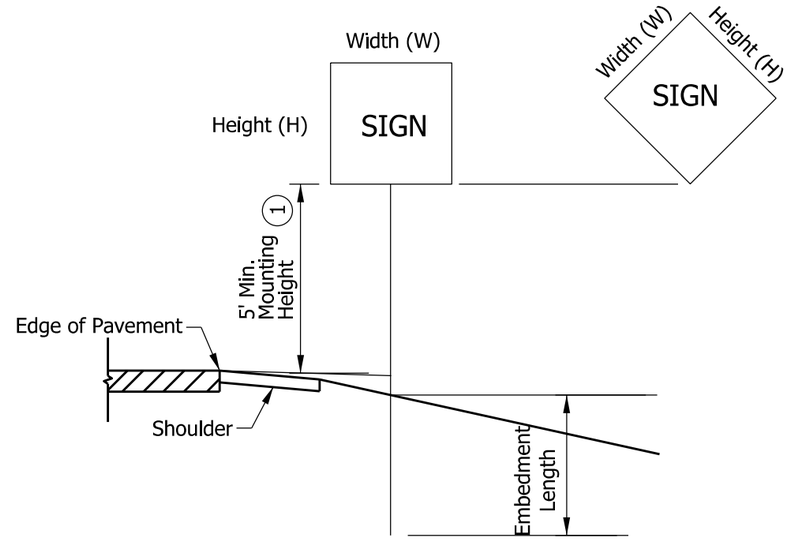

INDIANA DEPARTMENT OF TRANSPORTATION

STEEL SIGN POSTS
ANCHOR BASE DETAILS

SEPTEMBER 2017

STANDARD DRAWING NO. E 802-SNGS-09

DAVID H. BORUFF
REGISTERED
No. 60900348
STATE OF INDIANA
PROFESSIONAL ENGINEER

/s/ David H. Boruff 03/16/17
DESIGN STANDARDS ENGINEER DATE

/s/ John Leckie 04/10/17
CHIEF ENGINEER DATE

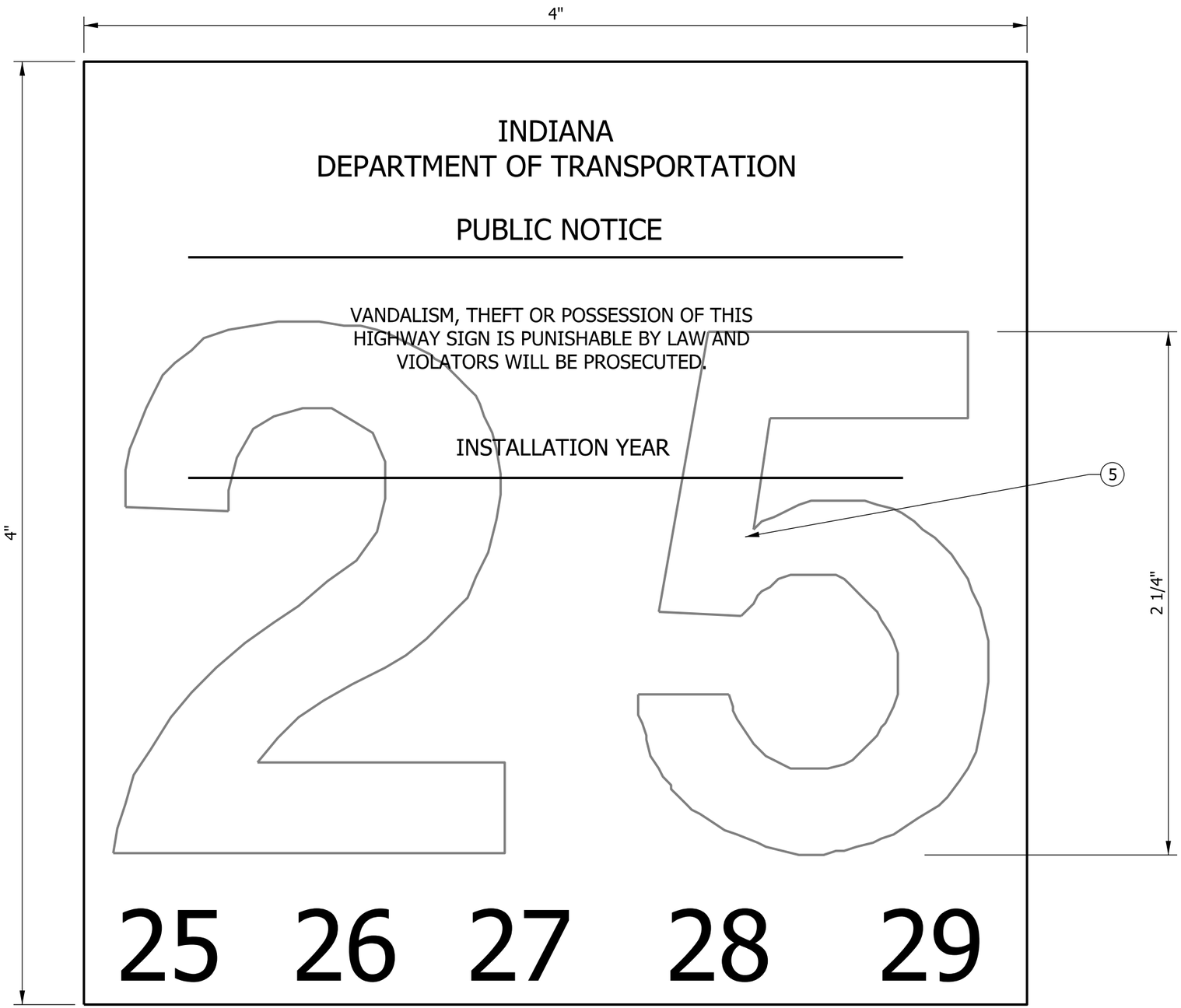

NOTES:

1. Height of lettering shall be 1/8" to 1/4". The height of the dates along the bottom shall be 1/2".
2. Copy shall be black on reflectorized white background.
3. The number of dates along the bottom need not be five, and the first date need not be 25. However, the installation year shall be shown.
4. The overlay number is to be of colored transparent sheeting to indicate the last two digits of the year of installation.

(5) The decade of installation shall be indicated by color of transparent sheeting:

2020 - 2029 Brown
2030 - 2039 Orange

INDIANA DEPARTMENT OF TRANSPORTATION

SIGN IDENTIFICATION
MARKING

SEPTEMBER 2026

STANDARD DRAWING NO. E 802-SNGS-10

DAVID H. BORUFF
REGISTERED
No. 60900348
STATE OF INDIANA
PROFESSIONAL ENGINEER

DESIGN STANDARDS ENGINEER — 4/28/2026 DATE

CHIEF ENGINEER — 04/29/2026 DATE

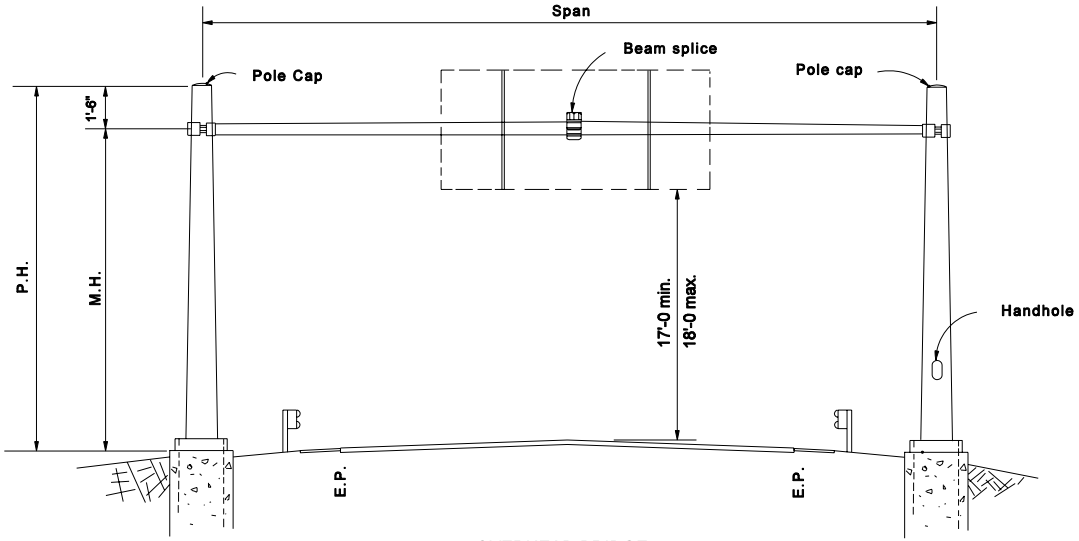

OVERHEAD BRIDGE

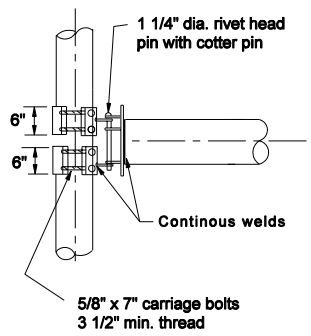

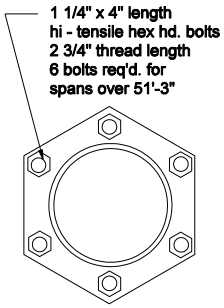

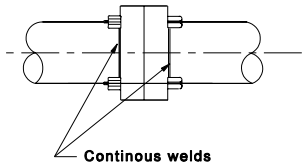

BEAM SPLICE

INDIANA DEPARTMENT OF TRANSPORTATION

OVERHEAD SIGN BRIDGE SPANS

MARCH 2004

STANDARD DRAWING NO. E 802-SNOB-01

RICHARD L. VanCLEAVE REGISTERED No. 9750 STATE OF INDIANA PROFESSIONAL ENGINEER

DESIGN STANDARDS ENGINEER

/s/ Richard L.VanCleave 3-01-04
DESIGN STANDARDS ENGINEER DATE

/s/ Richard K.Smutzer 3-01-04
CHIEF HIGHWAY ENGINEER DATE

INDEX

SHEET NO.	SUBJECT
1	Sign Placement Index Sheet
2	Sign Placement at Exit Ramp Intersections
3	Sign Placement, Horizontal and Vertical Sign Clearance

INDIANA DEPARTMENT OF TRANSPORTATION

SIGN PLACEMENT
INDEX SHEET

SEPTEMBER 2026

STANDARD DRAWING NO. E 802-SNPL-01

DAVID H. BORUFF
REGISTERED
No.
60900348
STATE OF
INDIANA
PROFESSIONAL ENGINEER

David H Boruff 4/28/2026
DESIGN STANDARDS ENGINEER DATE

04/29/2026
CHIEF ENGINEER DATE

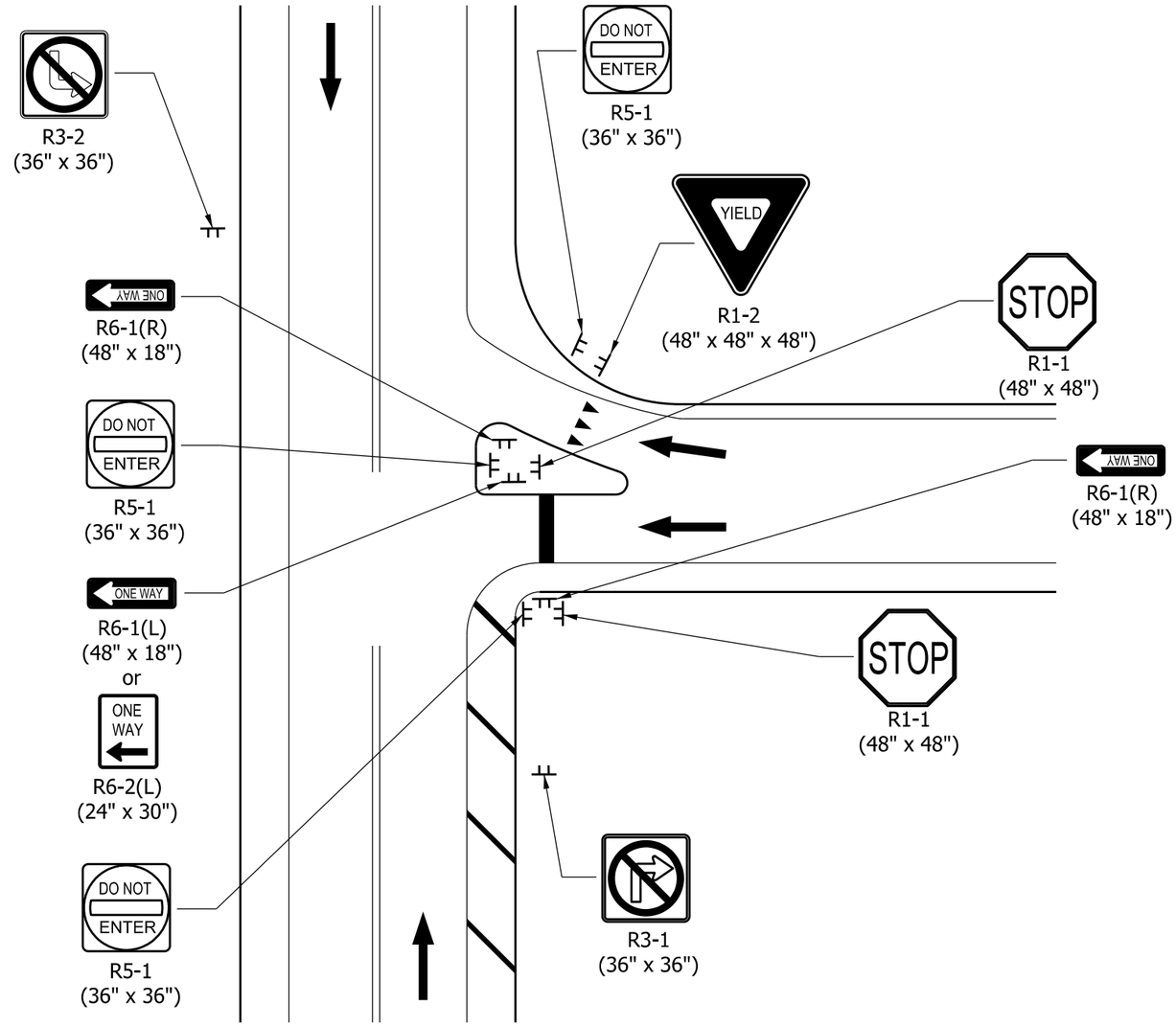

NOTES:

1. Diagonal lines shall be 12 in. wide and spaced 20 ft apart.
2. Sign locations shall be as shown on the plans or as directed.
3. R1-2 yield sign shall be at least 7 ft away from R5-3 signs.

INDIANA DEPARTMENT OF TRANSPORTATION

SIGN PLACEMENT AT EXIT RAMP INTERSECTIONS

SEPTEMBER 2026

STANDARD DRAWING NO. E 802-SNPL-02

DAVID H. BORUFF
REGISTERED
No. 60900348
STATE OF INDIANA
PROFESSIONAL ENGINEER

David H Boruff 4/28/2026
DESIGN STANDARDS ENGINEER DATE

04/29/2026
CHIEF ENGINEER DATE

TYPE OF ROADWAY CLEARANCE	INTERSTATE AND DIVIDED HIGHWAY WITH SHOULDER, RURAL & URBAN	DIVIDED HIGHWAY WITH CURB, RURAL & URBAN	NON-DIVIDED HIGHWAY, RURAL OR CITY STREET	NON-DIVIDED HIGHWAY, URBAN
VERTICAL: EDGE OF TRAVELED WAY PAVEMENT TO BOTTOM OF SIGN OR SIGNS	7 ft TO 7.5 ft (1)	7 ft TO 7.5 ft (2)	5 ft (2) TO 5.5 ft (4)	7 ft TO 7.5 ft (2)
HORIZONTAL: EDGE OF TRAVELED WAY PAVEMENT TO EDGE OF SIGN OR SIGNS	12 ft min. or 6 ft min. from the shoulder, whichever is greater	6 ft min. (3)	12 ft min. or 6 ft min. from the shoulder, whichever is greater	12 ft min. or 6 ft min. from the shoulder, whichever is greater (3)

NOTES:

(1) If a secondary sign is mounted below another sign, the secondary sign shall be installed at least 5 ft above the level of the pavement edge.

(2) The height to the bottom of a secondary sign mounted below another sign may be 1 ft less than the height specified above.

(3) In urban areas where lateral offsets are limited, a minimum later offset of 2 ft may be used. A minimum offset of 1 ft from the face of the curb may be used in urban areas where sidewalk width is limited or where existing poles are close to the curb.

(4) Where parking, sidewalk, or pedestrian movements are present, the clearance to the bottom of the sign shall be at least 7 ft.

INDIANA DEPARTMENT OF TRANSPORTATION

HORIZONTAL AND VERTICAL
GROUND MOUNTED SIGN CLEARANCE

SEPTEMBER 2026

STANDARD DRAWING NO. E 802-SNPL-03

DAVID H. BORUFF REGISTERED No. 60900348 STATE OF INDIANA PROFESSIONAL ENGINEER

David H Boruff 4/28/2026
DESIGN STANDARDS ENGINEER DATE

04/29/2026
CHIEF ENGINEER DATE

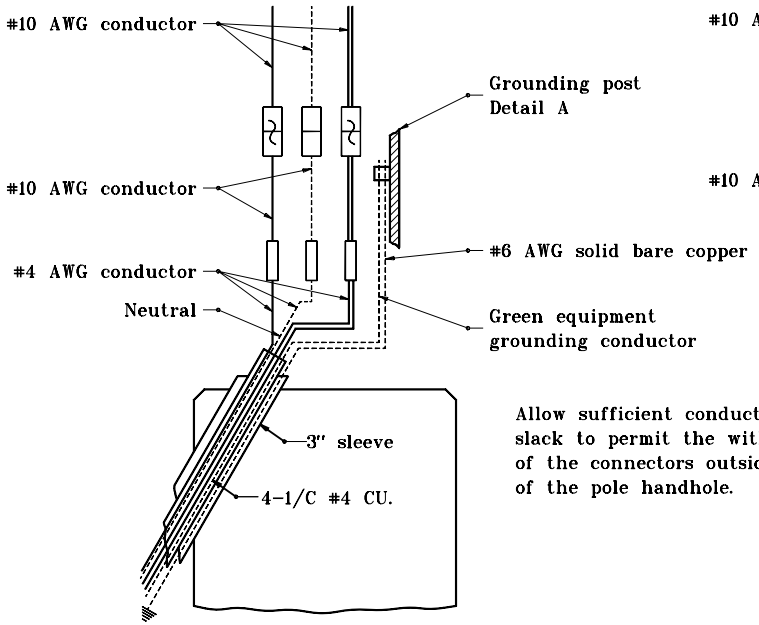

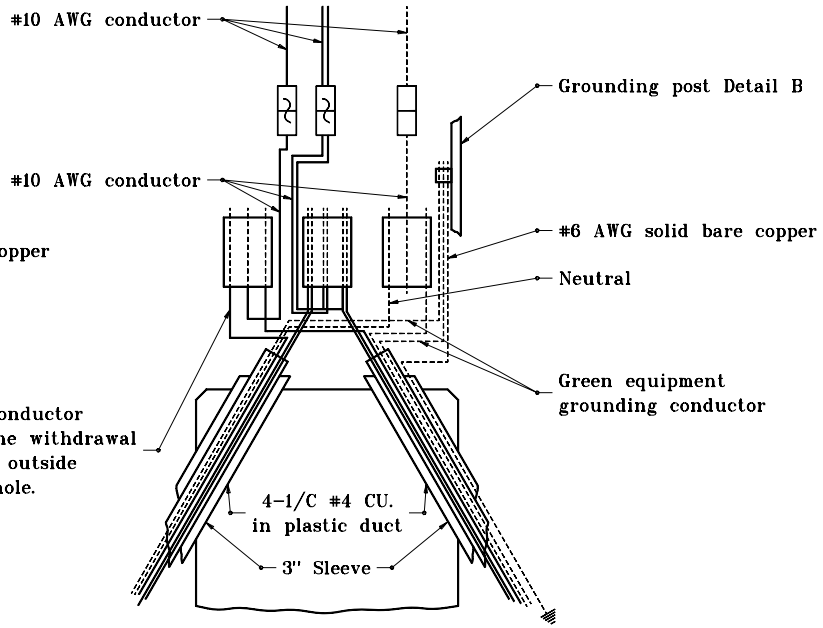

OVERHEAD SIGN SERVICE DETAIL
(UNDERGROUND CONNECTIONS)

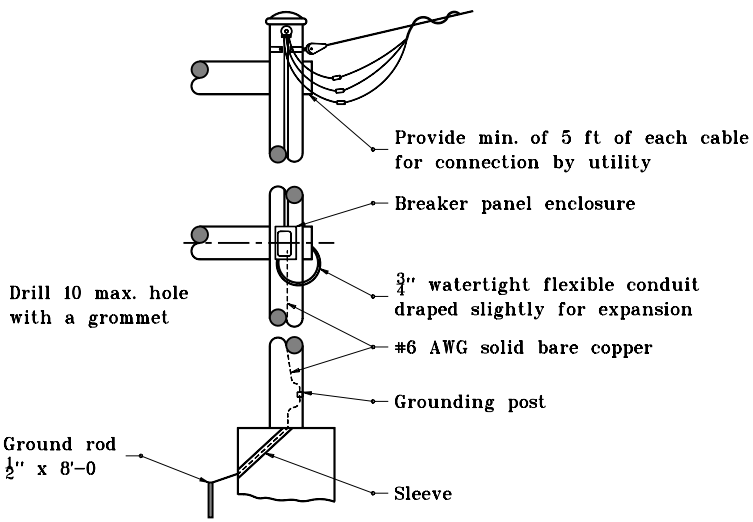

OVERHEAD SIGN SERVICE DETAIL
(AERIAL CONNECTION)

GENERAL NOTES

1. Breaker panel wiring to be used with bridge bracket sign illumination, or when lighting overhead sign is not part of a roadway lighting system.

2. Oxidation inhibitor shall be liberally applied to all surfaces that mate with a dissimilar material.

LEGEND

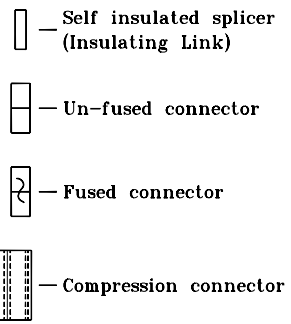

INDIANA DEPARTMENT OF TRANSPORTATION

SIGN WIRING DETAILS

SEPTEMBER 2001

STANDARD DRAWING NO. E 802-SNWR-01

ANTHONY L. UREMOVICH REGISTERED No. 18095 STATE OF INDIANA PROFESSIONAL ENGINEER

DESIGN STANDARDS ENGINEER

/s/ Anthony L. Uremovich 9-04-01
DESIGN STANDARDS ENGINEER — DATE

/s/ Firooz Zandi 9-04-01
CHIEF HIGHWAY ENGINEER — DATE

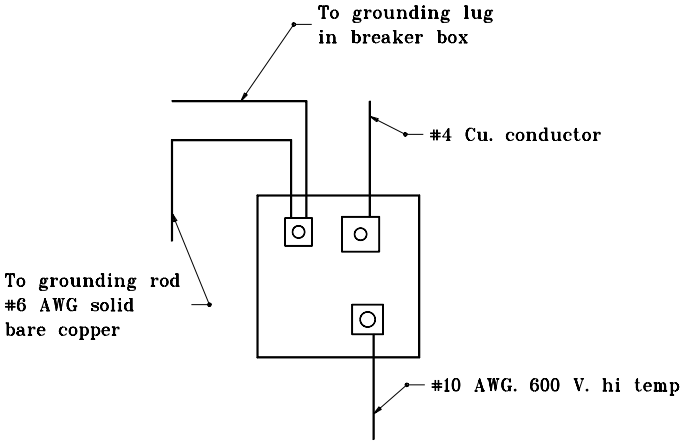

NEUTRAL GROUND LUG DETAIL B

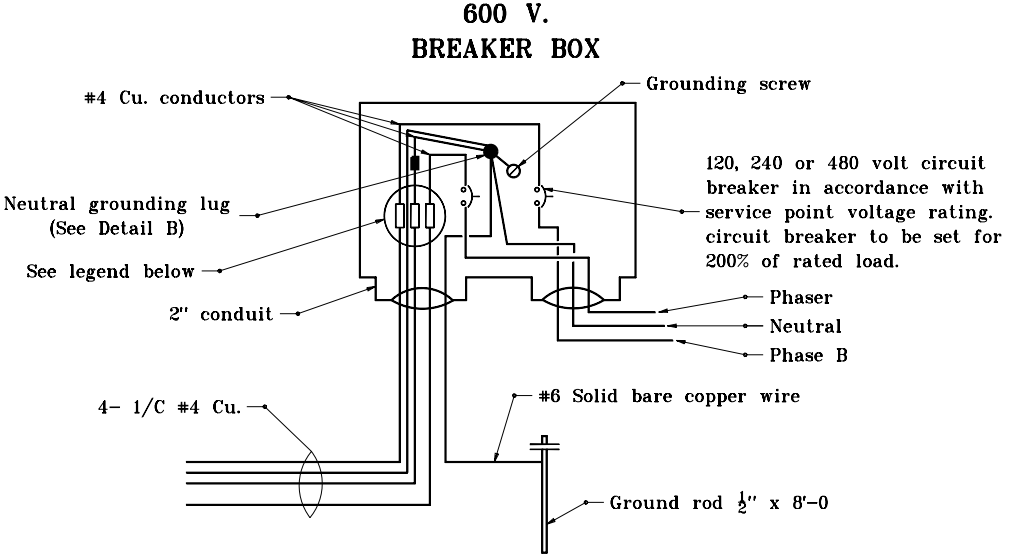

BREAKER BOX WIRING DETAIL

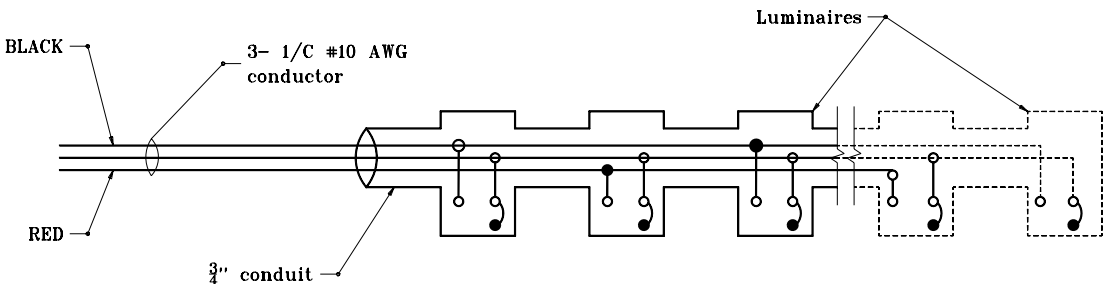

Alternate connections to balance load.

(For connection to 120 V. or 240 V. phase to neutral)

LUMINAIRE WIRING DETAIL

LEGEND

GENERAL NOTES

1. Breaker panel wiring to be used with bridge bracket sign illumination, or when lighting overhead sign is not a roadway lighting system.
2. Oxidation inhibitor shall be liberally applied to all surfaces that mate with a dissimilar material.

INDIANA DEPARTMENT OF TRANSPORTATION

SIGN WIRING DETAILS

SEPTEMBER 2001

STANDARD DRAWING NO. E 802-SNWR-02

ANTHONY L. UREMOVICH REGISTERED No. 18095 STATE OF INDIANA PROFESSIONAL ENGINEER

DESIGN STANDARDS ENGINEER

/s/ Anthony L. Uremovich 9-04-01
DESIGN STANDARDS ENGINEER — DATE

/s/ Firooz Zandi 9-04-01
CHIEF HIGHWAY ENGINEER — DATE

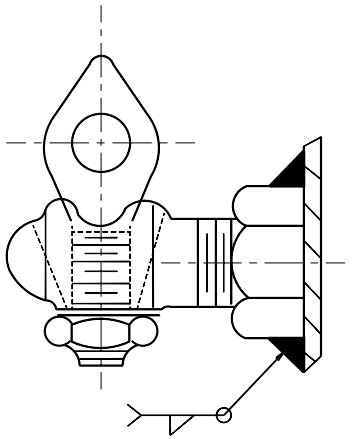

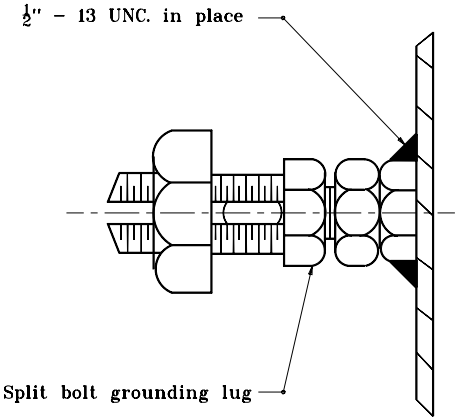

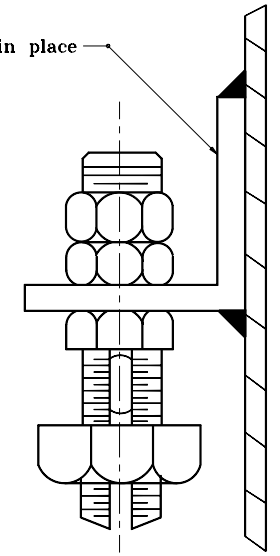

GENERAL NOTES

1. Oxidation inhibitor shall be liberally applied to all surfaces that mate with a dissimilar material.

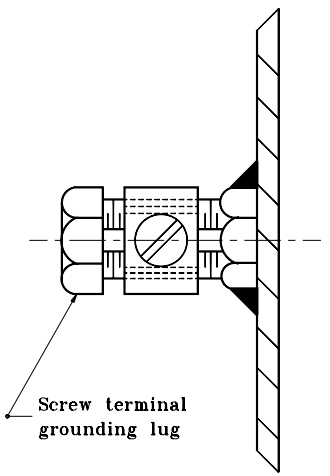

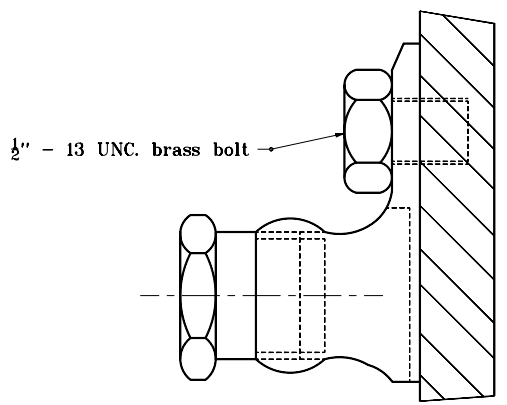

ALTERNATIVE GROUNDING POSTS DETAIL A

INDIANA DEPARTMENT OF TRANSPORTATION

SIGN WIRING DETAILS

SEPTEMBER 2001

STANDARD DRAWING NO. **E 802-SNWR-03**

ANTHONY L. UREMOVICH REGISTERED No. 18095 STATE OF INDIANA PROFESSIONAL ENGINEER

DESIGN STANDARDS ENGINEER

/s/ Anthony L. Uremovich 9-04-01
DESIGN STANDARDS ENGINEER — DATE

/s/ Firooz Zandi 9-04-01
CHIEF HIGHWAY ENGINEER — DATE

GENERAL NOTES

1. Oxidation inhibitor shall be liberally applied to all surfaces that mate with a dissimilar material.
2. Grooves A & B to receive 1 #4 Cu. conductor.
3. Groove C to receive 1 #10 conductor.
4. Use of inhibiting compound is mandatory for all connections.
5. Multiple compression fitting shall be covered with snap-on fiber or plastic covers. Taping shall not be permitted.

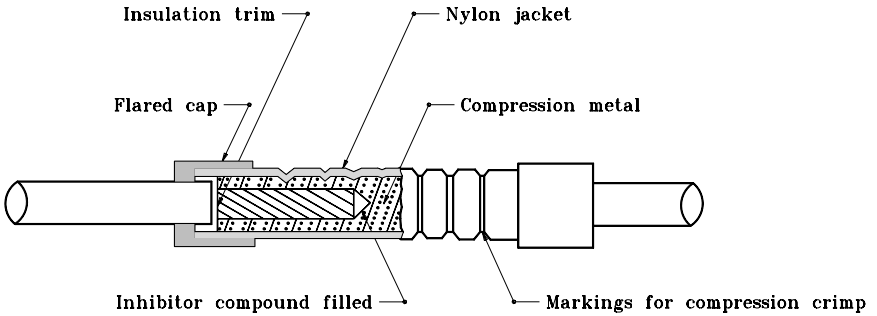

INSULATING LINK DETAIL

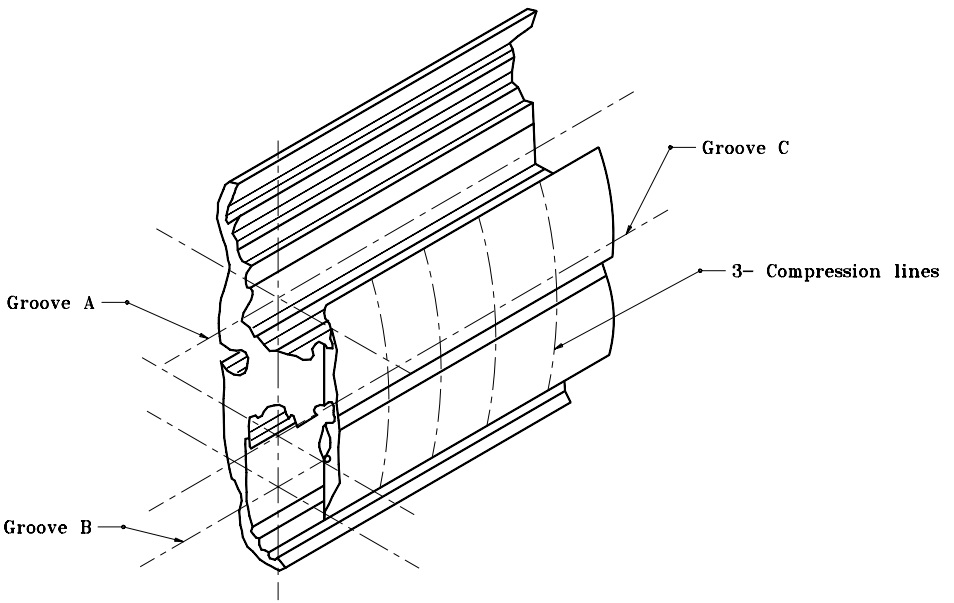

MULTIPLE COMPRESSION FITTING DETAIL

INDIANA DEPARTMENT OF TRANSPORTATION

SIGN WIRING DETAILS

SEPTEMBER 2001

STANDARD DRAWING NO. **E 802-SNWR-04**

ANTHONY L. UREMOVICH REGISTERED No. 18095 STATE OF INDIANA PROFESSIONAL ENGINEER

DESIGN STANDARDS ENGINEER

/s/ Anthony L. Uremovich 9-04-01
DESIGN STANDARDS ENGINEER — DATE

/s/ Firooz Zandi 9-04-01
CHIEF HIGHWAY ENGINEER — DATE

INDEX	
SHEET NO.	SUBJECT
1	Index
2	Plan & Elevation
3	Isometric Views
4	Panel Dimensions, Spans 36' thru 83'
5	Panel Dimensions, Spans 84' thru 130'
6	Member Sizes and Camber
7	Connection Details
8	Connection and Welding Details
9	Chord Flange Details
10	Top Cap and Chord End Plate Details
11	Sign Attachment Details
12	Base Plate, Anchor Bolt, and I.D. Tag Details
13	Handhole Details
14	Drilled Shaft Foundation
15	Spread Foundation

INDIANA DEPARTMENT OF TRANSPORTATION

TRI-CHORD SIGN STRUCTURE
DRAWING INDEX

SEPTEMBER 2013

STANDARD DRAWING NO. E 802-TCSS-01

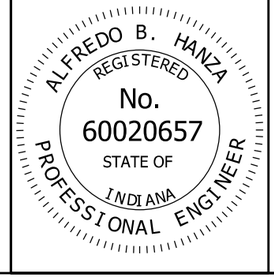

/s/ Alfredo B. Hanza *02/22/13*
DESIGN STANDARDS ENGINEER DATE

/s/ Mark A. Miller *03/27/13*
CHIEF ENGINEER DATE

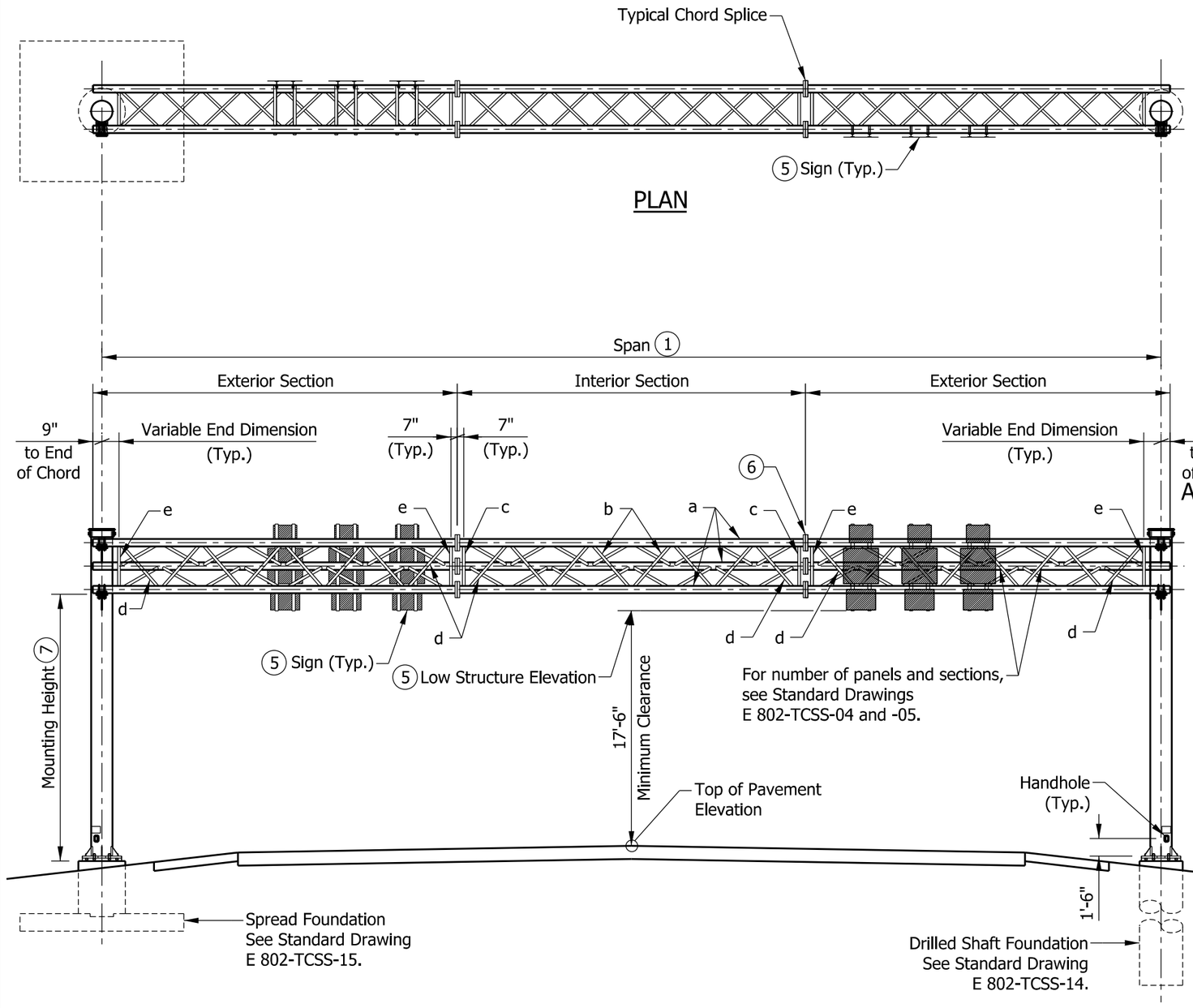

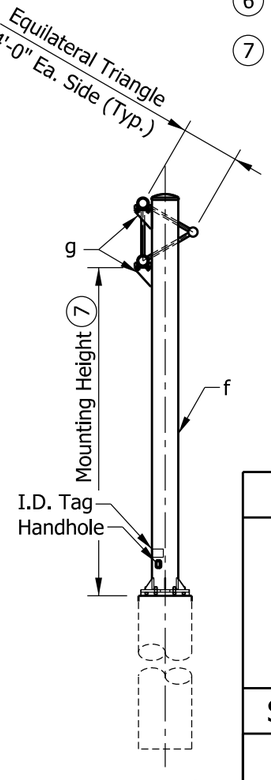

NOTES:

1. Tri-chord truss structures are for various maximum sign areas and span lengths. See Standard Drawings E 802-TCSS-04 through -06 for panel dimensions, member sizes, and camber.
2. Maximum deviation of any chord from a straight line in any section shall be less than 1/8". Maximum horizontal deviation over the entrie length of the tri-chord truss shall be less than 3/8" from a straight line.
3. See Standard Drawings E 802-TCSS-07 and -08 for connection and welding details.
4. See Standard Drawing E 802-TCSS-12 for base plate, anchor bolt, and I.D. tag details.
5. See Standard Drawing E 802-TCSS-11 for sign attachment details.
6. See Standard Drawing E 802-TCSS-09 for chord flange details.
7. Maximum mounting height is 23'-0".

LEGEND:

a - Chord
b - Interior Diagonal
c - Interior Section Vertical
d - End Diagonal
e - Exterior Section Vertical
f - Column
g - W-Beam Supports

INDIANA DEPARTMENT OF TRANSPORTATION

TRI-CHORD SIGN STRUCTURE PLAN AND ELEVATION

SEPTEMBER 2013

STANDARD DRAWING NO. E 802-TCSS-02

ALFREDO B. HANZA REGISTERED No. 60020657 STATE OF INDIANA PROFESSIONAL ENGINEER

/s/ Alfredo B. Hanza 02/22/13
DESIGN STANDARDS ENGINEER DATE

/s/ Mark A. Miller 03/27/13
CHIEF ENGINEER DATE

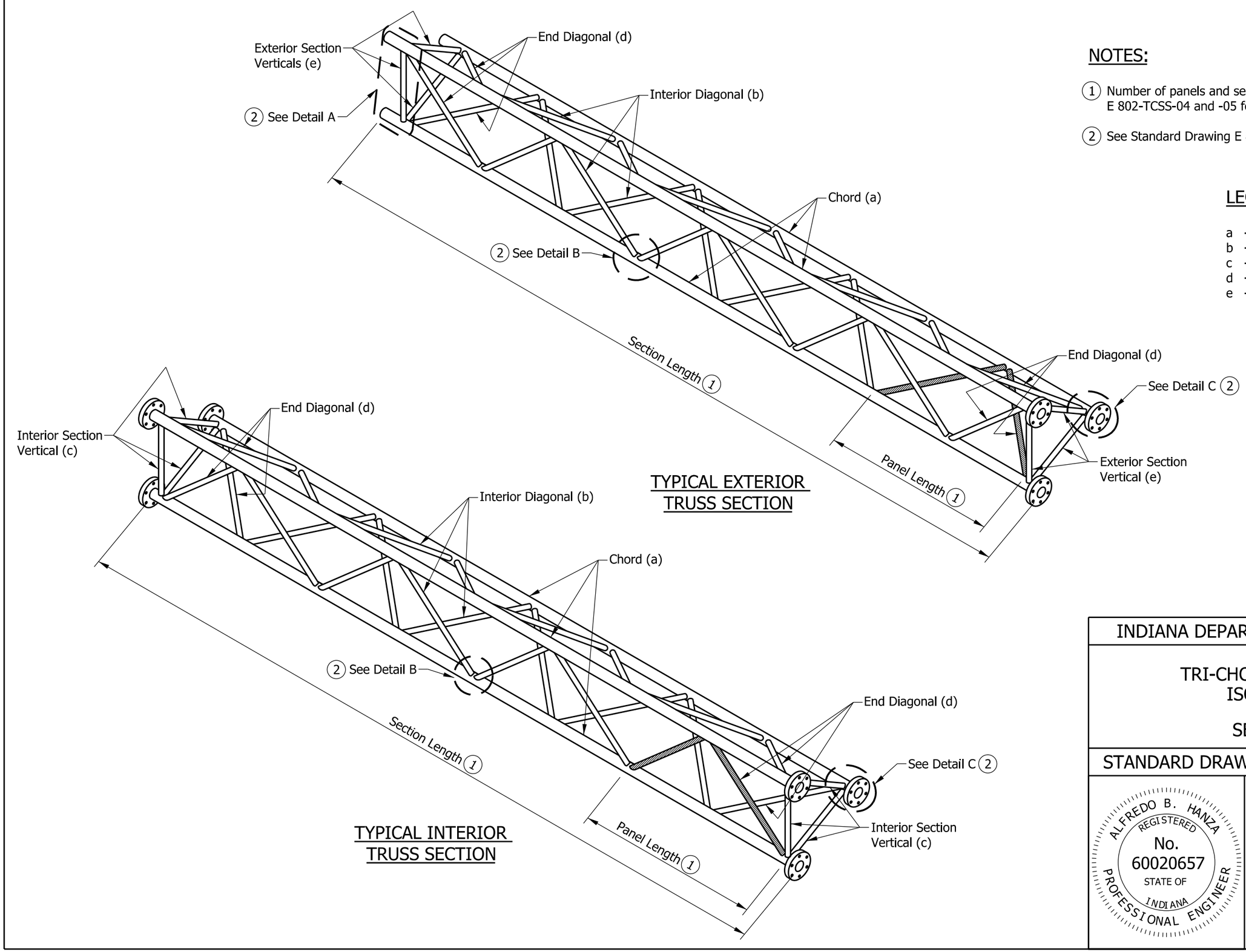

TYPICAL EXTERIOR TRUSS SECTION

TYPICAL INTERIOR TRUSS SECTION

NOTES:

1. Number of panels and sections varies. See Standard Drawings E 802-TCSS-04 and -05 for recommended dimensions.
2. See Standard Drawing E 802-TCSS-08 for Details A, B, and C.

LEGEND:

a - Chord
b - Interior Diagonal
c - Interior Section Vertical
d - End Diagonal
e - Exterior Section Vertical

INDIANA DEPARTMENT OF TRANSPORTATION

TRI-CHORD SIGN STRUCTURE ISOMETRIC VIEWS

SEPTEMBER 2013

STANDARD DRAWING NO. E 802-TCSS-03

ALFREDO B. HANZA REGISTERED No. 60020657 STATE OF INDIANA PROFESSIONAL ENGINEER

/s/ Alfredo B. Hanza 02/22/13
DESIGN STANDARDS ENGINEER DATE

/s/ Mark A. Miller 03/27/13
CHIEF ENGINEER DATE

RECOMMENDED PANEL DIMENSIONS FOR TRI-CHORD (36' THROUGH 83')

SPAN	EXTERIOR SECTIONS					INTERIOR SECTIONS			
SPAN-TRUSS LENGTH (FT)	NO. OF EXT. SEC.	NO. OF EXT. PANELS PER SEC.	VARIABLE END DIMENSION	PANEL LENGTH	SECTION LENGTH	NO. OF INT. SEC.	NO. OF INT. PANELS PER SEC.	PANEL LENGTH	SECTION LENGTH
36	2	5	1'-2"	3'-3"	18'-9"				
37	2	5	1'-3"	3'-4"	19'-3"				
38	2	5	1'-4"	3'-5"	19'-9"				
39	2	5	1'-5"	3'-6"	20'-3"				
40	2	5	1'-6"	3'-7"	20'-9"				
41	2	5	1'-7"	3'-8"	21'-3"				
42	2	6	1'-5"	3'-2"	21'-9"				
43	2	6	1'-5"	3'-3"	22'-3"				
44	2	6	1'-5"	3'-4"	22'-9"				
45	2	6	1'-5"	3'-5"	23'-3"				
46	2	7	1'-5"	3'-0"	23'-9"				
47	2	7	1'-4"	3'-1"	24'-3"				
48	2	7	1'-6 1/2"	3'-1 1/2"	24'-9"				
49	2	7	1'-5 1/2"	3'-2 1/2"	25'-3"				
50	2	7	1'-4 1/2"	3'-3 1/2"	25'-9"				
51	2	7	1'-7"	3'-4"	26'-3"				
52	2	7	1'-6"	3'-5"	26'-9"				
53	2	7	1'-5"	3'-6"	27'-3"				
54	2	7	1'-4"	3'-7"	27'-9"				
55	2	7	1'-6 1/2"	3'-7 1/2"	28'-3"				
56	2	7	1'-5 1/2"	3'-8 1/2"	28'-9"				
57	2	7	1'-4 1/2"	3'-9 1/2"	29'-3"				
58	2	7	1'-7"	3'-10"	29'-9"				
59	2	6	1'-4"	3'-0"	20'-8"	1	6	3'-0"	19'-2"
60	2	6	1'-5 1/2"	3'-1/2"	21'-1/2"	1	6	3'-1/2"	19'-5"
61	2	6	1'-7"	3'-1"	21'-5"	1	6	3'-1"	19'-8"
62	2	6	1'-8 1/2"	3'-1 1/2"	21'-9 1/2"	1	6	3'-1 1/2"	19'-11"
63	2	6	1'-10"	3'-2"	22'-2"	1	6	3'-2"	20'-2"
64	2	6	1'-7"	3'-3"	22'-5"	1	6	3'-3"	20'-8"
65	2	6	1'-8 1/2"	3'-3 1/2"	22'-9 1/2"	1	6	3'-3 1/2"	20'-11"
66	2	6	1'-10"	3'-4"	23'-2"	1	6	3'-4"	21'-2"
67	2	6	1'-7"	3'-5"	23'-5"	1	6	3'-5"	21'-8"
68	2	6	1'-8 1/2"	3'-5 1/2"	23'-9 1/2"	1	6	3'-5 1/2"	21'-11"
69	2	6	1'-10"	3'-6"	24'-2"	1	6	3'-6"	22'-2"
70	2	6	1'-9"	3'-2 1/2"	22'-4"	1	8	3'-2 1/2"	26'-10"
71	2	6	1'-5"	3'-3 1/2"	22'-6"	1	8	3'-3 1/2"	27'-6"
72	2	6	1'-6"	3'-4"	22'-10"	1	8	3'-4"	27'-10"
73	2	6	1'-7"	3'-4 1/2"	23'-2"	1	8	3'-4 1/2"	28'-2"
74	2	6	1'-8"	3'-5"	23'-6"	1	8	3'-5"	28'-6"
75	2	6	1'-4"	3'-6"	23'-8"	1	8	3'-6"	29'-2"
76	2	6	1'-5"	3'-6 1/2"	24'-0"	1	8	3'-6 1/2"	29'-6"
77	2	6	1'-6"	3'-7"	24'-4"	1	8	3'-7"	29'-10"
78	2	6	1'-7"	3'-7 1/2"	24'-8"	1	8	3'-7 1/2"	30'-2"
79	2	6	1'-8"	3'-8"	25'-0"	1	8	3'-8"	30'-6"
80	2	6	1'-4"	3'-9"	25'-2"	1	8	3'-9"	31'-2"
81	2	6	1'-5"	3'-9 1/2"	25'-6"	1	8	3'-9 1/2"	31'-6"
82	2	6	1'-6"	3'-10"	25'-10"	1	8	3'-10"	31'-10"
83	2	6	1'-7"	3'-10 1/2"	26'-2"	1	8	3'-10 1/2"	32'-2"

NOTES:

1. All panels on a truss shall be the same length. The minimum panel length is 3'-0" and the maximum is 4'-0".
2. A single interior unit shall have an even number of panels to maintain the pattern of the diagonals.
3. Use minimum number of sections for each truss. Keep the maximum section length at 35'-0".
4. See Standard Drawing E 802-TCSS-05 for required camber.

INDIANA DEPARTMENT OF TRANSPORTATION

TRI-CHORD SIGN STRUCTURE
PANEL DIMENSIONS
SPANS 36' THRU 83'

SEPTEMBER 2013

STANDARD DRAWING NO. E 802-TCSS-04

ALFREDO B. HANZA
REGISTERED
No. 60020657
STATE OF INDIANA
PROFESSIONAL ENGINEER

/s/ Alfredo B. Hanza 02/22/13
DESIGN STANDARDS ENGINEER DATE

/s/ Mark A. Miller 03/27/13
CHIEF ENGINEER DATE

RECOMMENDED PANEL DIMENSIONS FOR TRI-CHORD (84' THROUGH 130')

SPAN	EXTERIOR SECTIONS					INTERIOR SECTIONS			
SPAN-TRUSS LENGTH (FT)	NO. OF EXT. SEC.	NO. OF EXT. PANELS PER SEC.	VARIABLE END DIMENSION	PANEL LENGTH	SECTION LENGTH	NO. OF INT. SEC.	NO. OF INT. PANELS PER SEC.	PANEL LENGTH	SECTION LENGTH
84	2	6	1'-8"	3'-11"	26'-6"	1	8	3'-11"	32'-6"
85	2	6	1'-9"	3'-11 1/2"	26'-10"	1	8	3'-11 1/2"	32'-10"
86	2	6	1'-10"	4'-0"	27'-2"	1	8	4'-0"	33'-2"
87	2	7	1'-6 1/2"	3'-8 1/2"	28'-10"	1	8	3'-8 1/2"	33'-10"
88	2	7	1'-7"	3'-9"	29'-2"	1	8	3'-9"	31'-2"
89	2	7	1'-7 1/2"	3'-9 1/2"	29'-6"	1	8	3'-9 1/2"	31'-6"
90	2	7	1'-8"	3'-10"	29'-10"	1	8	3'-10"	31'-10"
91	2	7	1'-8 1/2"	3'-10 1/2"	30'-2"	1	8	3'-10 1/2"	32'-2"
92	2	8	1'-8"	3'-8"	32'-4"	1	8	3'-5 1/2"	28'-10"
93	2	8	1'-8"	3'-8 1/2"	32'-8"	1	8	3'-6"	29'-2"
94	2	8	1'-8"	3'-9"	33'-0"	1	8	3'-6 1/2"	29'-6"
95	2	8	1'-8"	3'-9 1/2"	33'-4"	1	8	3'-7"	29'-10"
96	2	8	1'-8"	3'-10"	33'-8"	1	8	3'-7 1/2"	30'-2"
97	2	8	1'-8"	3'-10 1/2"	34'-0"	1	8	3'-8"	30'-6"
98	2	8	1'-8"	3'-11"	34'-4"	1	8	3'-8 1/2"	30'-10"
99	2	8	1'-8"	3'-11 1/2"	34'-8"	1	8	3'-9"	31'-2"
100	2	8	1'-8"	4'-0"	35'-0"	1	8	3'-9 1/2"	31'-6"
101	2	8	1'-10 1/2"	3'-1 1/2"	28'-2 1/2"	1	7	3'-1 1/2"	23'-1/2"
102	2	8	1'-9"	3'-2"	28'-5"	1	7	3'-2"	23'-4"
103	2	8	1'-7 1/2"	3'-2 1/2"	28'-7 1/2"	1	7	3'-2 1/2"	23'-7 1/2"
104	2	8	1'-6"	3'-3"	28'-10"	1	7	3'-3"	23'-11"
105	2	8	1'-4 1/2"	3'-3 1/2"	29'-0 1/2"	1	7	3'-3 1/2"	24'-2 1/2"
106	2	8	1'-10 1/2"	3'-3 1/2"	29'-6 1/2"	1	7	3'-3 1/2"	24'-2 1/2"
107	2	8	1'-9"	3'-3 1/2"	29'-9"	1	7	3'-4"	24'-6"
108	2	8	1'-7 1/2"	3'-4 1/2"	29'-11 1/2"	1	7	3'-4 1/2"	24'-9 1/2"
109	2	8	1'-6"	3'-5"	30'-2"	1	7	3'-5"	25'-1"
110	2	8	1'-8 1/4"	3'-5 1/4"	30'-6 1/4"	1	7	3'-5 1/4"	25'-2 3/4"
111	2	8	1'-10 1/2"	3'-5 1/2"	30'-5 1/4"	1	7	3'-5 1/2"	25'-4 1/2"
112	2	8	1'-9"	3'-6"	31'-1"	1	7	3'-6"	25'-8"
113	2	8	1'-7 1/2"	3'-6 1/2"	31'-3 1/2"	1	7	3'-6 1/2"	25'-11 1/2"
114	2	8	1'-6"	3'-7"	31'-6"	1	7	3'-7"	26'-3"
115	2	8	1'-8 1/4"	3'-7 1/4"	31'-10 1/4"	1	7	3'-7 1/4"	26'-4 3/4"
116	2	8	1'-10 1/2"	3'-7 1/2"	32'-2 1/2"	1	7	3'-7 1/2"	26'-6 1/2"
117	2	8	1'-9"	3'-8"	32'-5"	1	7	3'-8"	26'-10"
118	2	8	1'-7 1/2"	3'-8 1/2"	32'-7 1/2"	1	7	3'-8 1/2"	27'-1 1/2"
119	2	8	1'-6"	3'-9"	32'-10"	1	7	3'-9"	27'-5"
120	2	8	1'-8 1/4"	3'-9 1/4"	33'-2 1/4"	1	7	3'-9 1/4"	27'-6 3/4"
121	2	8	1'-10 1/2"	3'-9 1/2"	33'-6 1/2"	1	7	3'-9 1/2"	27'-8 1/2"
122	2	8	1'-9"	3'-10"	33'-9"	1	7	3'-10"	28'-0"
123	2	8	1'-9"	3'-5 1/2"	30'-9"	1	8	3'-9 1/2"	31'-6"
124	2	8	1'-11"	3'-5 1/2"	30'-11"	1	8	3'-10"	31'-10"
125	2	8	1'-9"	3'-6"	31'-1"	1	8	3'-10 1/2"	32'-2"
126	2	8	1'-7"	3'-6 1/2"	31'-3"	1	8	3'-11"	32'-6"
127	2	8	1'-9"	3'-7"	31'-9"	1	8	3'-11"	32'-6"
128	2	8	1'-11"	3'-7 1/2"	32'-3"	1	8	3'-11"	32'-6"
129	2	8	1'-9"	3'-8"	32'-5"	1	8	3'-11 1/2"	32'-10"
130	2	8	1'-7"	3'-8 1/2"	32'-7"	1	8	4'-0"	33'-2"

NOTES:

1. All panels on a truss shall be the same length. The minimum panel length is 3'-0" and the maximum is 4'-0".
2. A single interior unit shall have an even number of panels to maintain the pattern of the diagonals.
3. Use minimum number of sections for each truss. Keep the maximum section length at 35'-0".
4. See Standard Drawing E 802-TCSS-05 for required camber.

INDIANA DEPARTMENT OF TRANSPORTATION

TRI-CHORD SIGN STRUCTURE
PANEL DIMENSIONS
SPANS 84' THRU 130'
SEPTEMBER 2013

STANDARD DRAWING NO. E 802-TCSS-05

ALFREDO B. HANZA
REGISTERED
No. 60020657
STATE OF INDIANA
PROFESSIONAL ENGINEER

/s/ Alfredo B. Hanza 02/22/13
DESIGN STANDARDS ENGINEER DATE

/s/ Mark A. Miller 03/27/13
CHIEF ENGINEER DATE

TRI-CHORD SIGN STRUCTURE MEMBER SIZES

TRUSS TYPE	MAX SIGN AREA (SQ FT)	MAX MOUNTING HEIGHT, H	MAX SPAN (FT)	TRUSS MEMBERS										END SUPPORT MEMBERS		
				CHORD a		INT. DIAGONALS b		INT. SECTION VERT. c		END DIAGONALS d		EXT. SECTION VERT. e		COLUMN f		W-BEAM g
				DIAM. (IN.)	THICK (IN.)	DIAM. (IN.)	THICK (IN.)	DIAM. (IN.)	THICK (IN.)	DIAM. (IN.)	THICK (IN.)	DIAM. (IN.)	THICK (IN.)	DIAM. (IN.)	THICK (IN.)	
A	120	23'-0"	80	5.563	0.375	1.900	0.145	1.900	0.200	2.875	0.276	1.900	0.145	18.000	0.562	W 12 x 35
B			100	5.563	0.375	2.375	0.218	1.900	0.200	2.875	0.375	2.375	0.218	18.000	0.562	W 12 x 35
C			130	5.563	0.500	2.375	0.218	1.900	0.200	2.875	0.375	2.375	0.218	20.000	0.500	W 12 x 58
D	240	23'-0"	80	5.563	0.625	2.375	0.343	1.900	0.200	2.875	0.552	2.375	0.343	18.000	0.750	W 12 x 35
E			100	5.563	0.625	2.375	0.343	1.900	0.200	2.875	0.552	2.375	0.343	20.000	0.812	W 12 x 35
F			130	6.625	0.562	2.375	0.343	1.900	0.200	3.500	0.437	2.375	0.343	22.000	0.875	W 12 x 58

LEGEND:

a - Chord
b - Interior Diagonal
c - Interior Section Vertical
d - End Diagonal
e - Exterior Section Vertical
f - Column
g - W-Beam Support

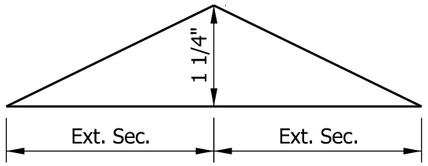

CAMBER DIAGRAM (2-Section Truss)

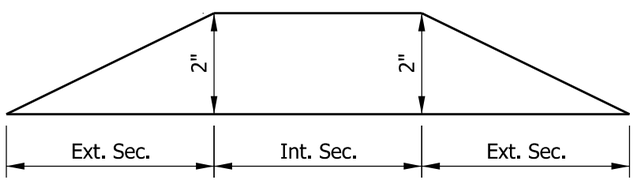

CAMBER DIAGRAM (3-Section Truss)

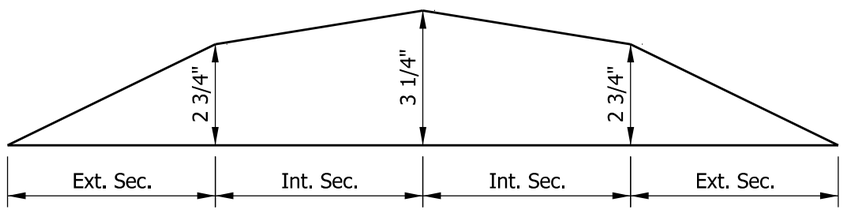

CAMBER DIAGRAM (4-Section Truss)

INDIANA DEPARTMENT OF TRANSPORTATION

TRI-CHORD SIGN STRUCTURE
MEMBER SIZES AND CAMBER

SEPTEMBER 2013

STANDARD DRAWING NO. E 802-TCSS-06

ALFREDO B. HANZA
REGISTERED
No. 60020657
STATE OF INDIANA
PROFESSIONAL ENGINEER

/s/ Alfredo B. Hanza 02/22/13
DESIGN STANDARDS ENGINEER DATE

/s/ Mark A. Miller 03/27/13
CHIEF ENGINEER DATE

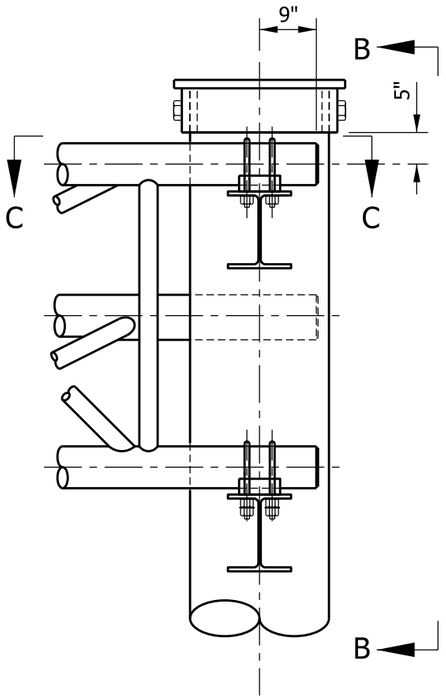

TRUSS SEAT DETAIL

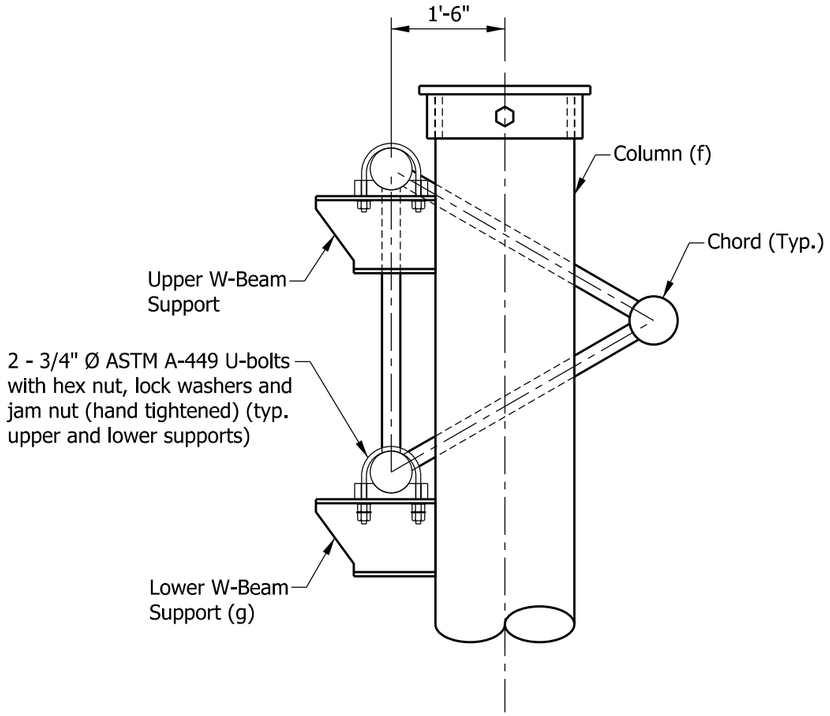

VIEW B-B

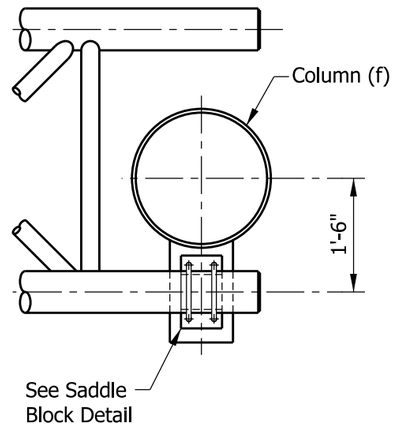

VIEW C-C

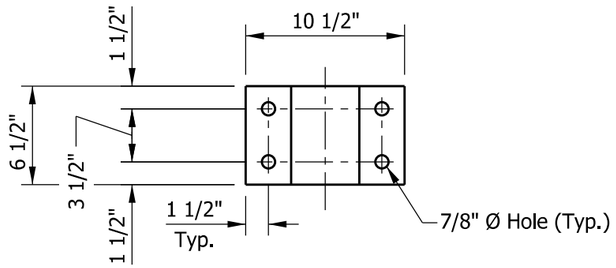

PLAN

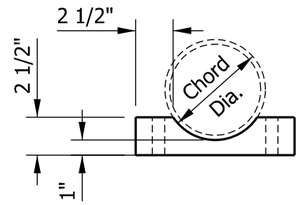

SADDLE BLOCK DETAIL

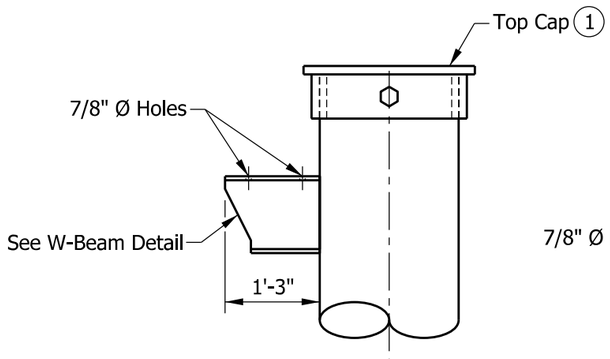

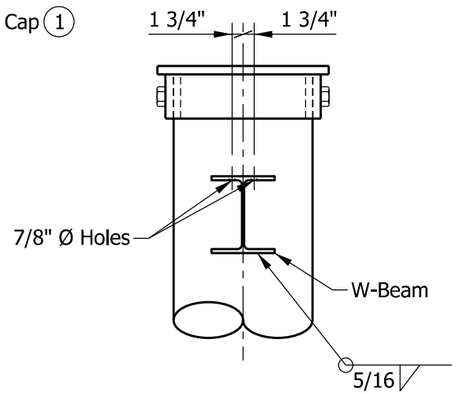

TRUSS SEAT DETAIL

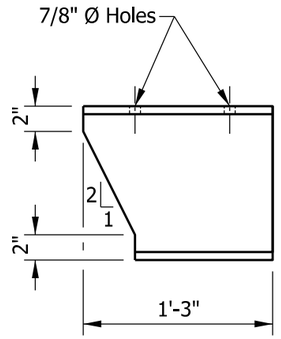

W-BEAM DETAIL

NOTE: Upper and lower W-beam details are the same.

NOTE:

(1) See Standard Drawing E 802-TCSS-10 for top cap detail.

INDIANA DEPARTMENT OF TRANSPORTATION

TRI-CHORD SIGN STRUCTURE CONNECTION DETAILS

SEPTEMBER 2013

STANDARD DRAWING NO. E 802-TCSS-07

ALFREDO B. HANZA REGISTERED No. 60020657 STATE OF INDIANA PROFESSIONAL ENGINEER

/s/ Alfredo B. Hanza 02/22/13
DESIGN STANDARDS ENGINEER DATE

/s/ Mark A. Miller 03/27/13
CHIEF ENGINEER DATE

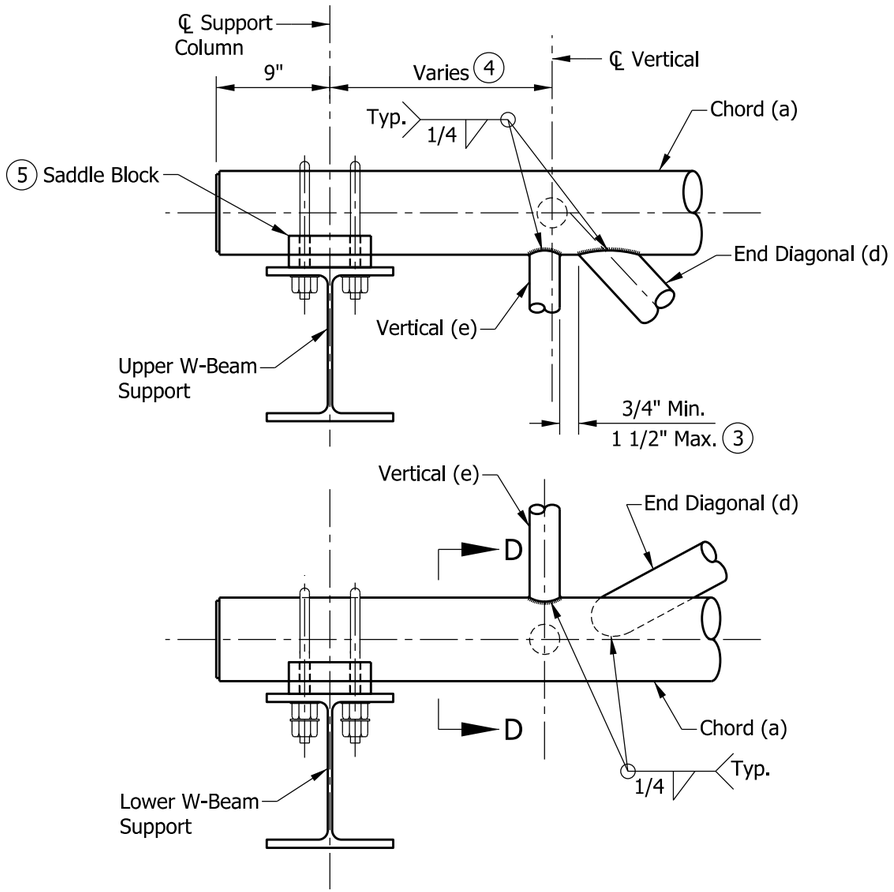

DETAIL A
SUPPORT END DETAIL FOR EXTERIOR SECTION

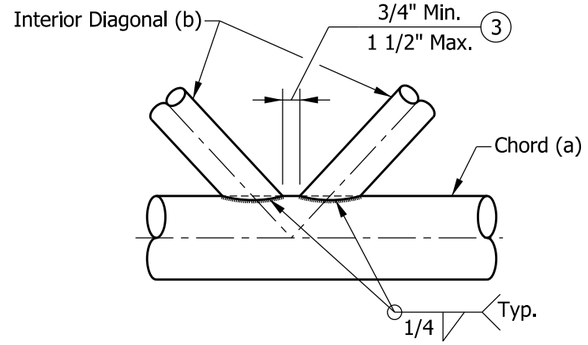

DETAIL B
TYPICAL PANEL CONNECTION

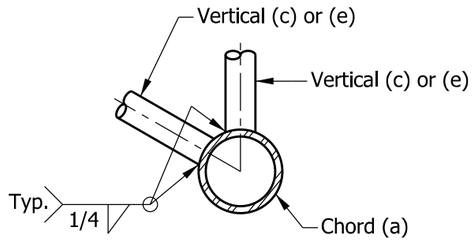

SECTION D-D
TYPICAL JOINT DETAILS

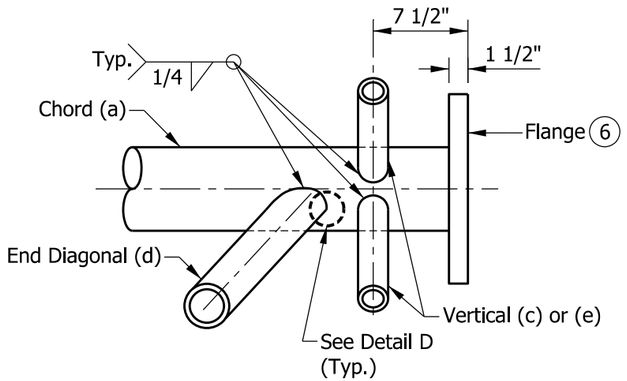

DETAIL C
TYPICAL PANEL CONNECTION

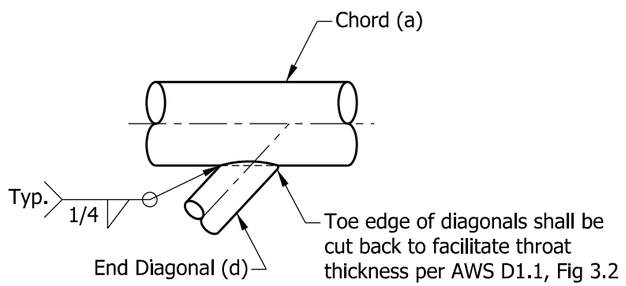

DETAIL D

NOTES:

1. All bracing members shall be machined to provide a snug fit to the chord members along the entire edge of bracing members before welding.
2. See Standard Drawing E 802-TCSS-03 for member location and see Standard Drawing E 802-TCSS-06 for member sizes.

(3) Vertical and horizontal diagonals shall be detailed for minimum offset from the panel point based on the following: offset shall provide a 3/4" minimum to 1 1/2" maximum clearance between any diagonal and any horizontal or vertical member, and to provide clearance for U-bolt connections of signs.

(4) Variable end dimension. See Standard Drawings E 802-TCSS-04 and -05 for table of recommended dimensions.

(5) See Standard Drawing E 802-TCSS-07 for saddle block details.

(6) See Standard Drawing E 802-TCSS-09 for chord flange details.

INDIANA DEPARTMENT OF TRANSPORTATION

TRI-CHORD SIGN STRUCTURE
CONNECTION AND WELDING DETAILS

SEPTEMBER 2013

STANDARD DRAWING NO. E 802-TCSS-08

ALFREDO B. HANZA
REGISTERED
No. 60020657
STATE OF INDIANA
PROFESSIONAL ENGINEER

/s/ Alfredo B. Hanza 03/26/13
DESIGN STANDARDS ENGINEER DATE

/s/ Mark A. Miller 03/27/13
CHIEF ENGINEER DATE

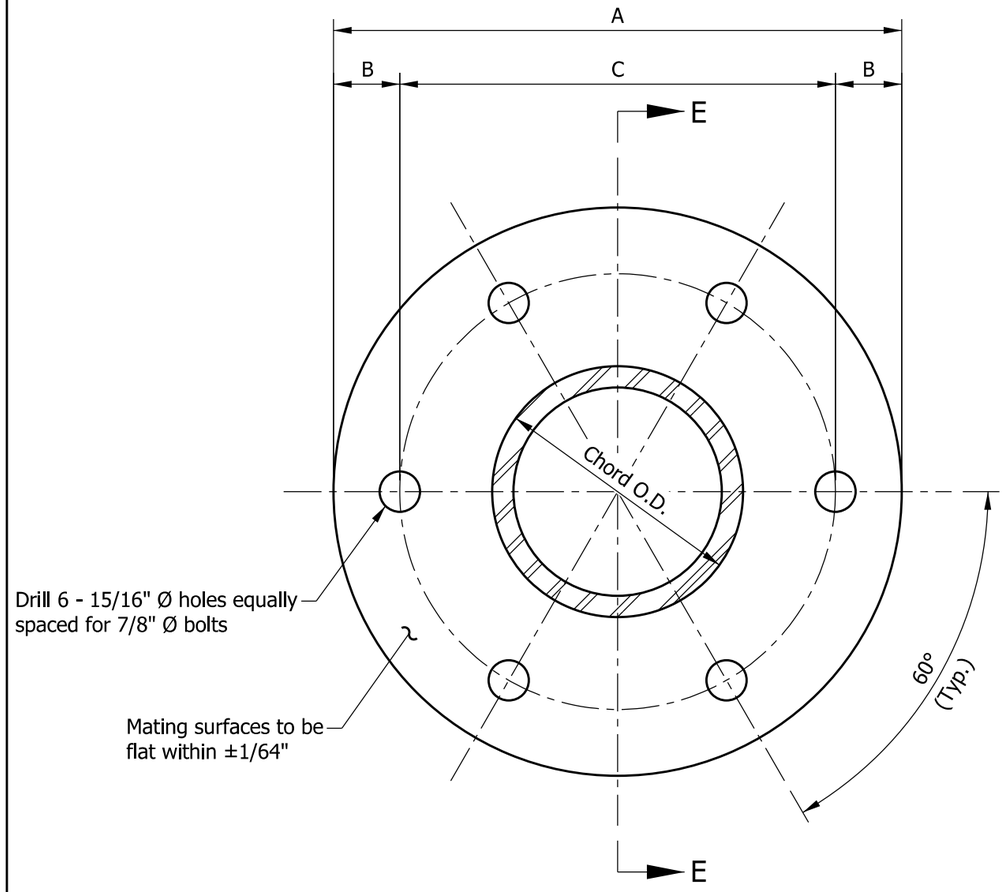

FLANGE DETAIL

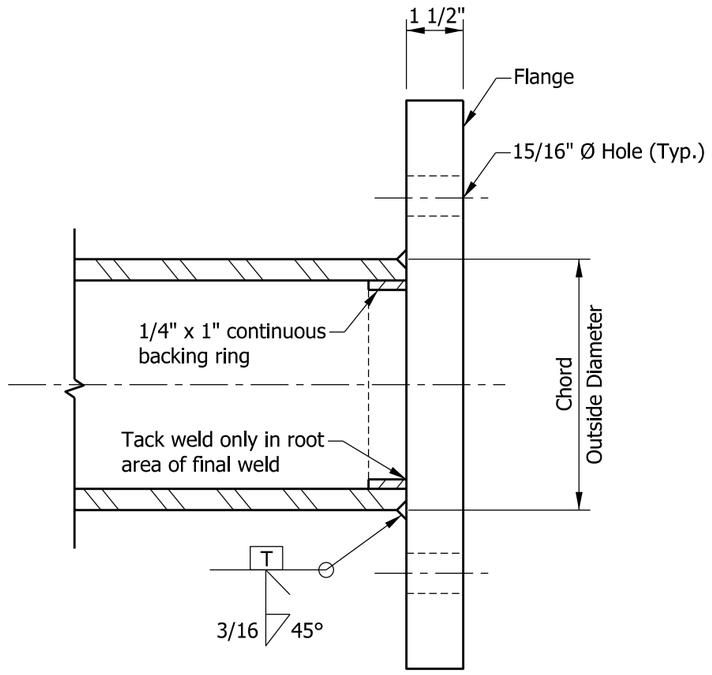

SECTION E-E

NOTES:

1. Mating surfaces to be flat within ±1/64". Flange shall be given additional finish if necessary to ensure contact between plates.
2. Use Type I ASTM A325 bolts with matching lock nuts. Lock nuts shall have steel inserts.
3. Bolts and lock nuts shall be hot dip galvanized in accordance with AASHTO M 232.
4. Install high strength bolts in accordance with 711.65.

DIMENSION TABLE				
TRUSS CHORD O.D.	BOLT SIZE	A	B	C
6.625"	7/8"	14"	2"	10"
5.625"	7/8"	13"	2"	9"

INDIANA DEPARTMENT OF TRANSPORTATION

TRI-CHORD SIGN STRUCTURE
CHORD FLANGE DETAILS

SEPTEMBER 2013

STANDARD DRAWING NO. E 802-TCSS-09

ALFREDO B. HANZA
REGISTERED
No. 60020657
STATE OF INDIANA
PROFESSIONAL ENGINEER

/s/ Alfredo B. Hanza 03/26/13
DESIGN STANDARDS ENGINEER DATE

/s/ Mark A. Miller 03/27/13
CHIEF ENGINEER DATE

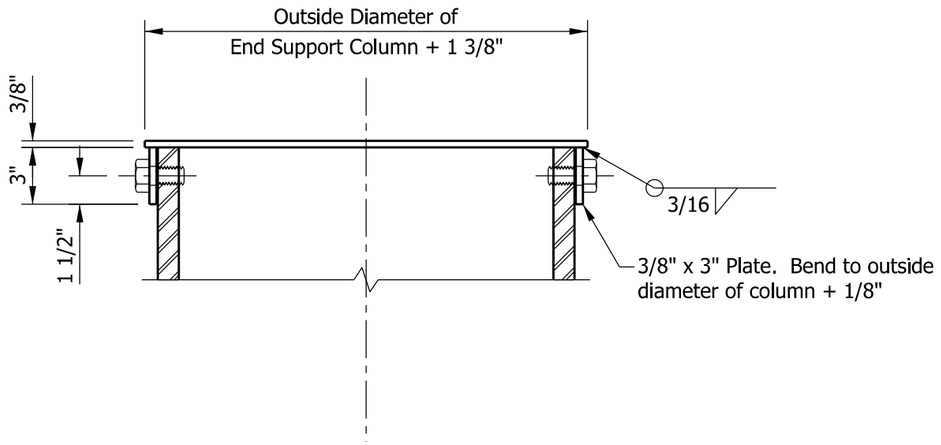

SECTION F-F

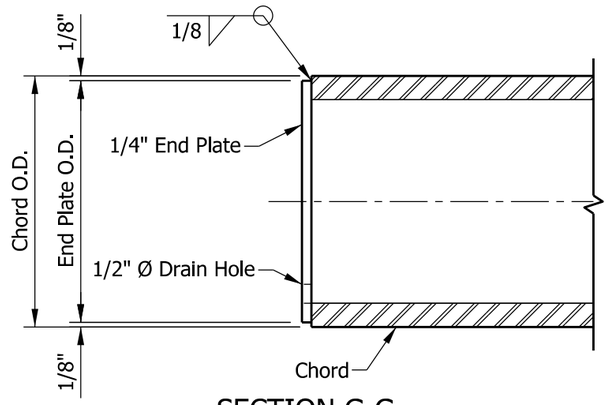

SECTION G-G

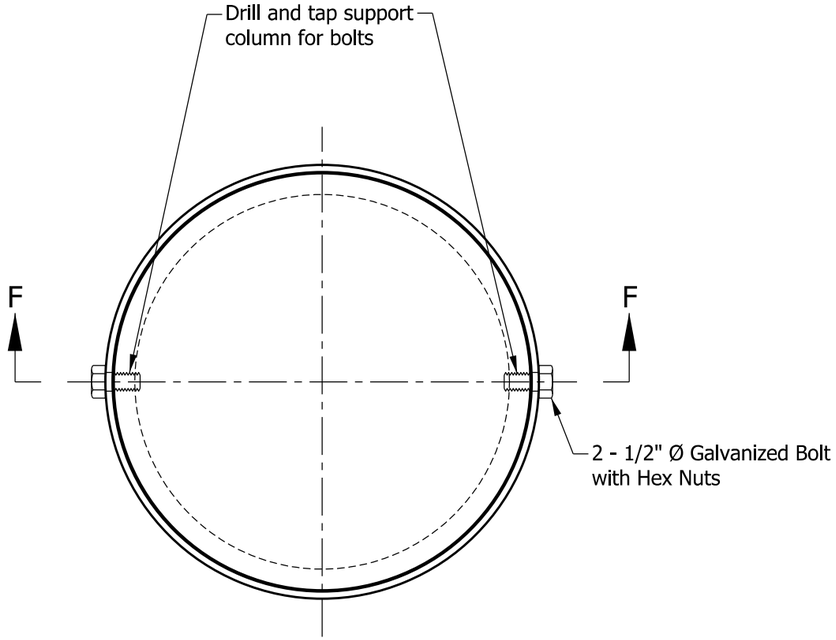

PLAN

COLUMN TOP CAP DETAIL

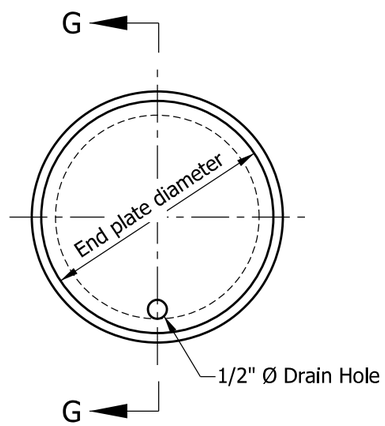

END VIEW

CHORD END PLATE DETAIL

INDIANA DEPARTMENT OF TRANSPORTATION

TRI-CHORD SIGN STRUCTURE
TOP CAP AND CHORD END PLATE DETAILS

SEPTEMBER 2013

STANDARD DRAWING NO. E 802-TCSS-10

ALFREDO B. HANZA
REGISTERED
No.
60020657
STATE OF
INDIANA
PROFESSIONAL ENGINEER

/s/ Alfredo B. Hanza 02/22/13
DESIGN STANDARDS ENGINEER DATE

/s/ Mark A. Miller 03/27/13
CHIEF ENGINEER DATE

NOTES:

1. Dimension A to be determined by Contractor to fit required signs.
2. A minimum of two truss chord attachment points to be used for each bracket.
3. The chords shall be at the vertices of an equilateral triangle having sides of length 4'-0".

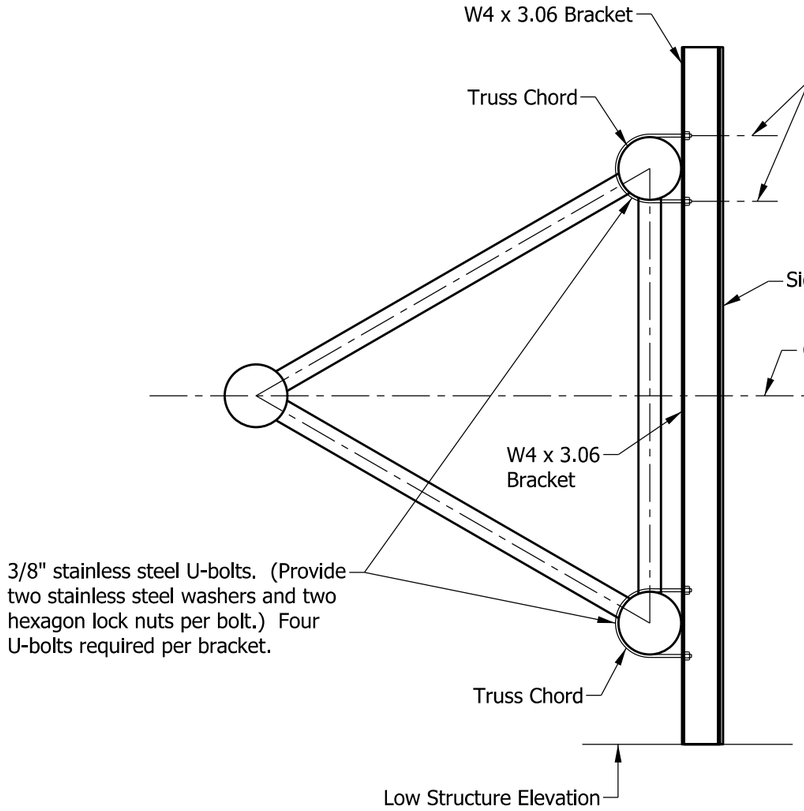

FRONT SIGN MOUNTING DETAIL

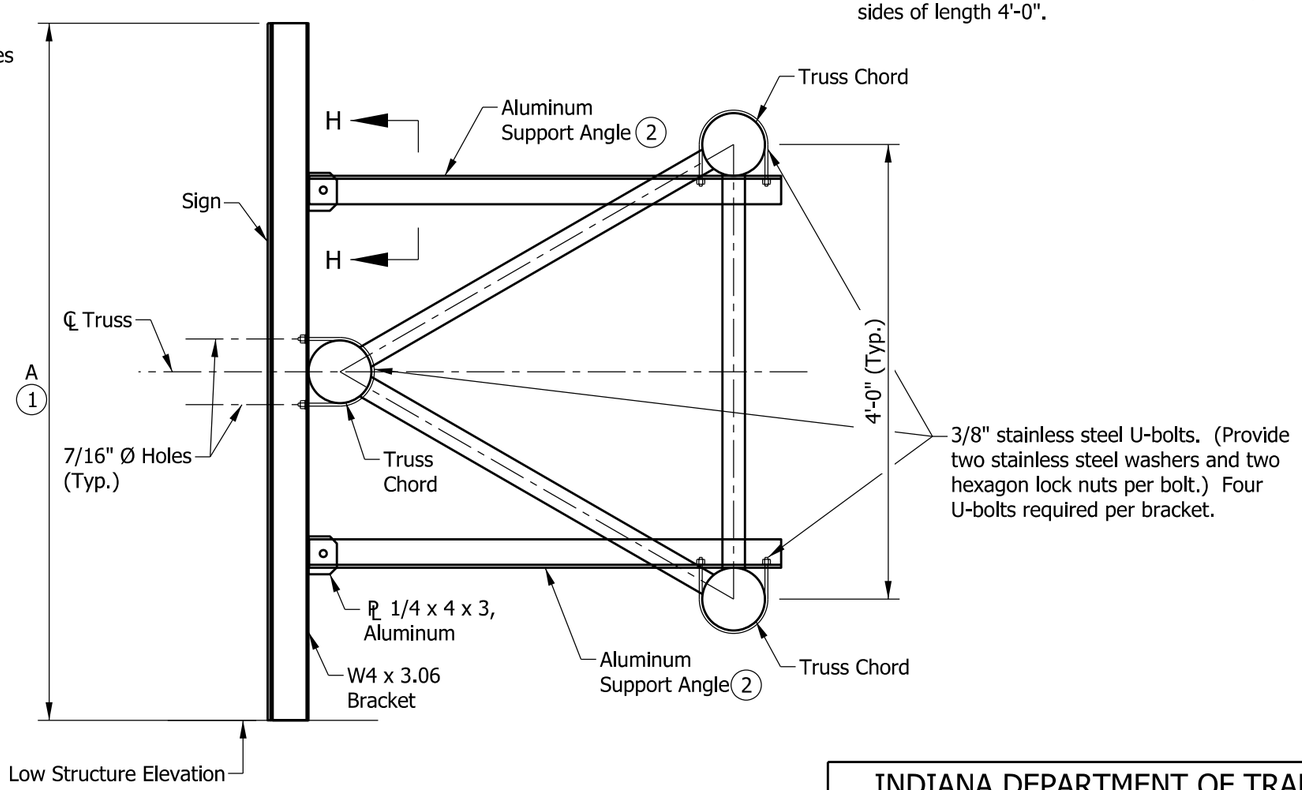

REAR SIGN MOUNTING DETAIL

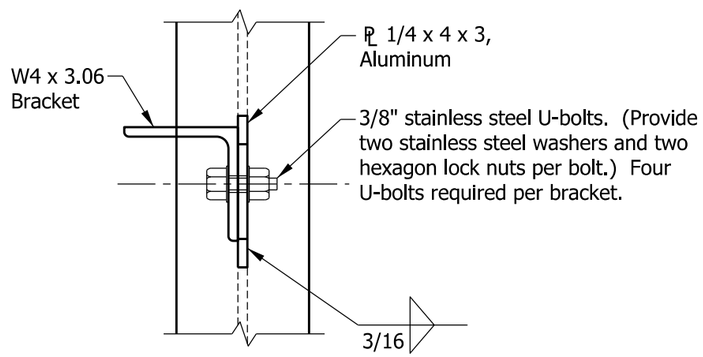

VIEW H-H

INDIANA DEPARTMENT OF TRANSPORTATION

TRI-CHORD SIGN STRUCTURE
SIGN ATTACHMENT DETAILS

SEPTEMBER 2013

STANDARD DRAWING NO. E 802-TCSS-11

ALFREDO B. HANZA
REGISTERED
No. 60020657
STATE OF INDIANA
PROFESSIONAL ENGINEER

/s/ Alfredo B. Hanza 02/22/13
DESIGN STANDARDS ENGINEER DATE

/s/ Mark A. Miller 03/27/13
CHIEF ENGINEER DATE

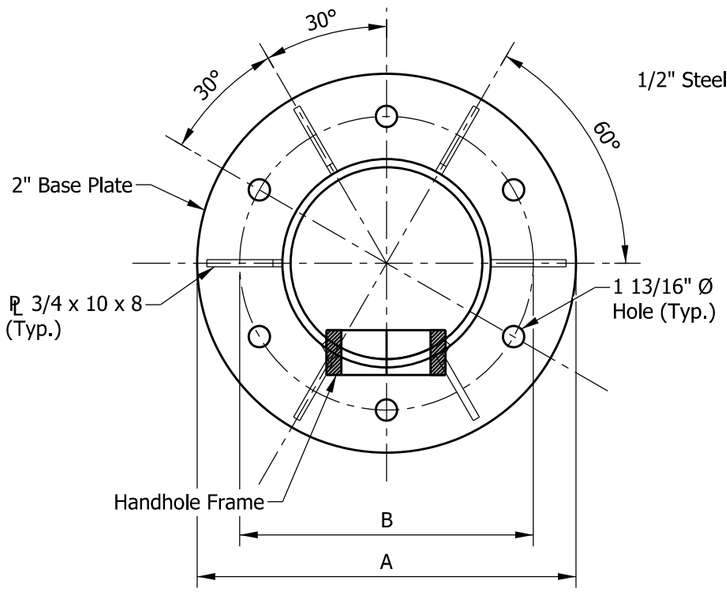

COLUMN BASE PLAN VIEW

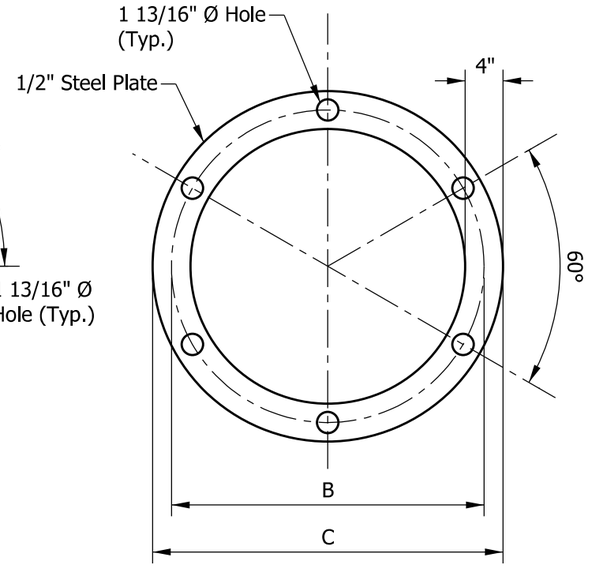

ANCHOR AND POSITIONING PLATE (1)

BASE PLATE DIMENSIONS			
COLUMN DIAMETER	A	B	C
18"	3'-0"	2'-3"	2'-7"
20"	3'-2"	2'-5"	2'-9"
22"	3'-4"	2'-7"	2'-11"

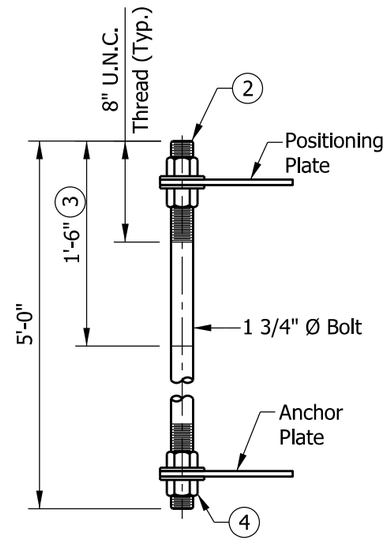

ANCHOR BOLT DETAIL

NOTES:

1. Utilize temporary positioning plate and leveling nuts or other Engineer-approved methods to maintain anchor bolt alignment during concrete placement. Positioning plate and associated nuts shall be removed upon completion of the foundation.
2. Protect threads during concreting with tape, sleeves, or other means.
3. 1'-6" is minimum to be galvanized. Entire bolt may be galvanized at Contractor's option.
4. Provide uncoated nut at bottom of anchor plate. Deform thread or use chemical thread lock to secure.
5. Use 1/4" x 1" minimum continuous backer ring. Tack weld only in root area of final weld. See Detail G this page for base plate weld detail.
6. Anchor bolt nuts shall be tightened against the base plate by turning the nut 1/6 turn (minimum) from snug tight condition.
7. See Standard Drawing E 802-TCSS-06 for column wall thickness.
8. I.D. tag is a 1/8" stainless steel plate with the following information stamped in 1/2" black letters:

   Manufacturer _____, Drawing/Order #_____
   Contract #_____, Structure Type _____
   Fabrication Date _____, Structure Length _____
   Column Mounting Height _____

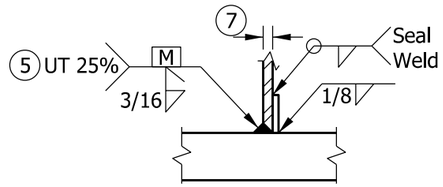

DETAIL G
BASE PLATE WELD

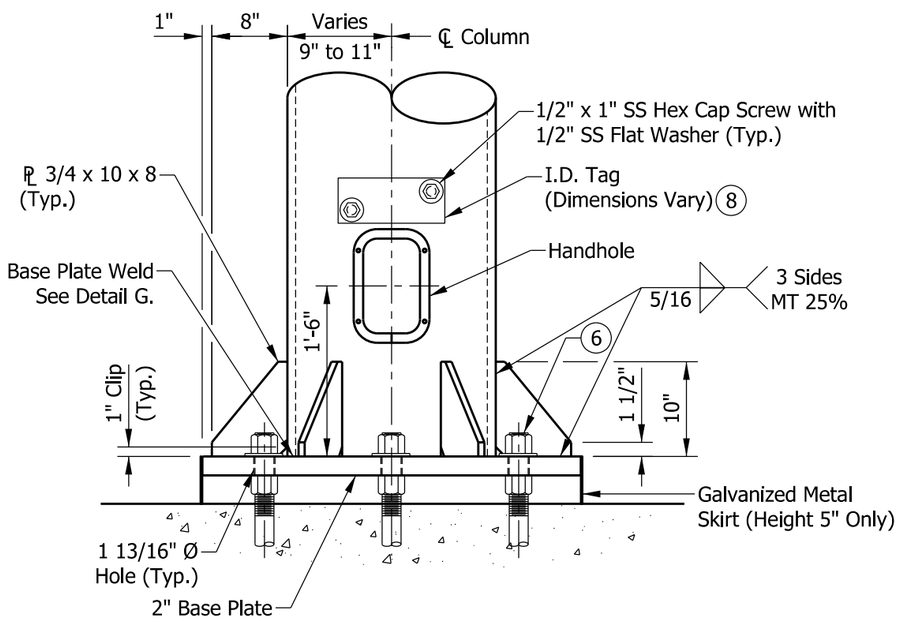

ELEVATION

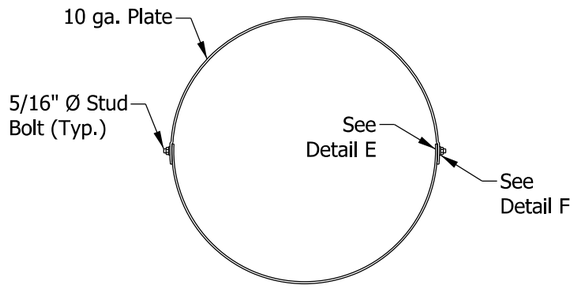

SKIRT DETAIL

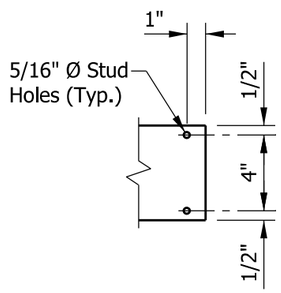

DETAIL E

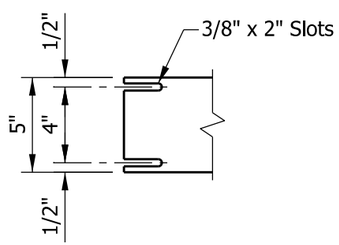

DETAIL F

INDIANA DEPARTMENT OF TRANSPORTATION

TRI-CHORD SIGN STRUCTURE BASE PLATE, ANCHOR BOLT, AND I.D. TAG DETAILS

SEPTEMBER 2013

STANDARD DRAWING NO. E 802-TCSS-12

ALFREDO B. HANZA REGISTERED No. 60020657 STATE OF INDIANA PROFESSIONAL ENGINEER

/s/ Alfredo B. Hanza 03/26/13
DESIGN STANDARDS ENGINEER DATE

/s/ Mark A. Miller 03/27/13
CHIEF ENGINEER DATE

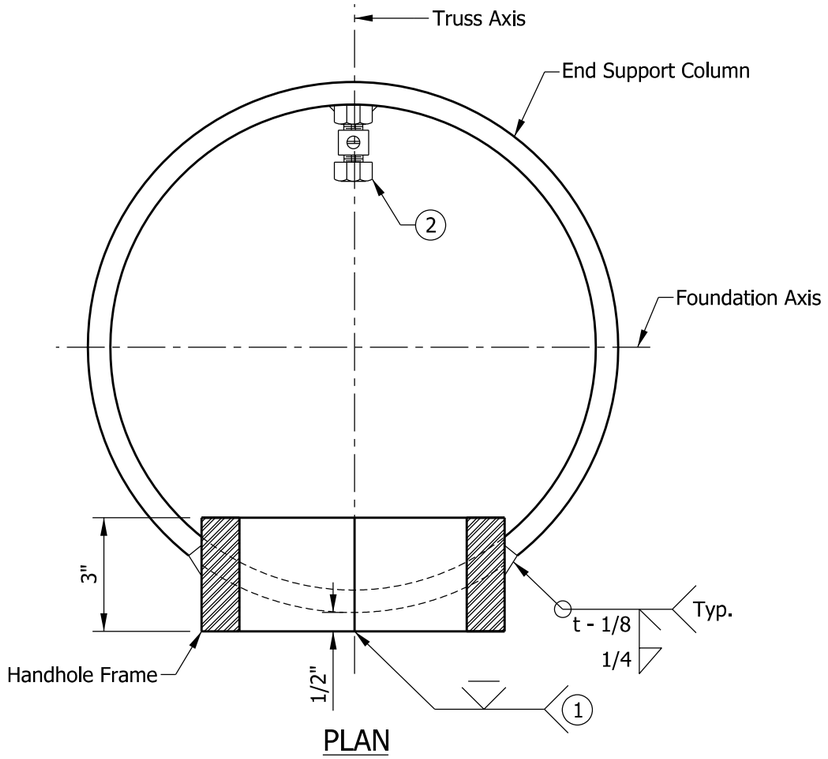

PLAN

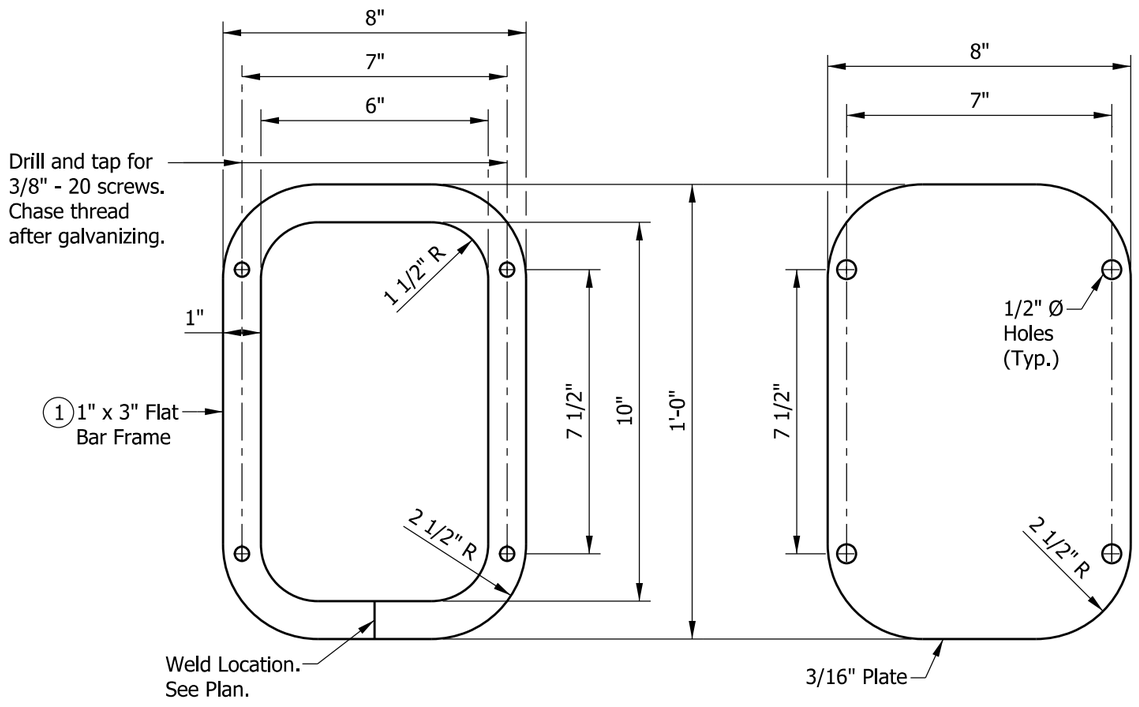

HANDHOLE FRAME DETAIL

HANDHOLE COVER

NOTES:

1. In lieu of fabricated handhole frame as shown, frame may be cut from 3" plate (rolling direction vertical).
2. Grounding clamp to be placed on far side of support directly opposite center of handhole.
3. See Standard Drawing E 802-TCSS-12 for handhole locations.

INDIANA DEPARTMENT OF TRANSPORTATION

TRI-CHORD SIGN STRUCTURE
HANDHOLE DETAILS

SEPTEMBER 2013

STANDARD DRAWING NO. E 802-TCSS-13

ALFREDO B. HANZA
REGISTERED
No.
60020657
STATE OF
INDIANA
PROFESSIONAL ENGINEER

/s/ Alfredo B. Hanza 02/22/13
DESIGN STANDARDS ENGINEER DATE

/s/ Mark A. Miller 03/27/13
CHIEF ENGINEER DATE

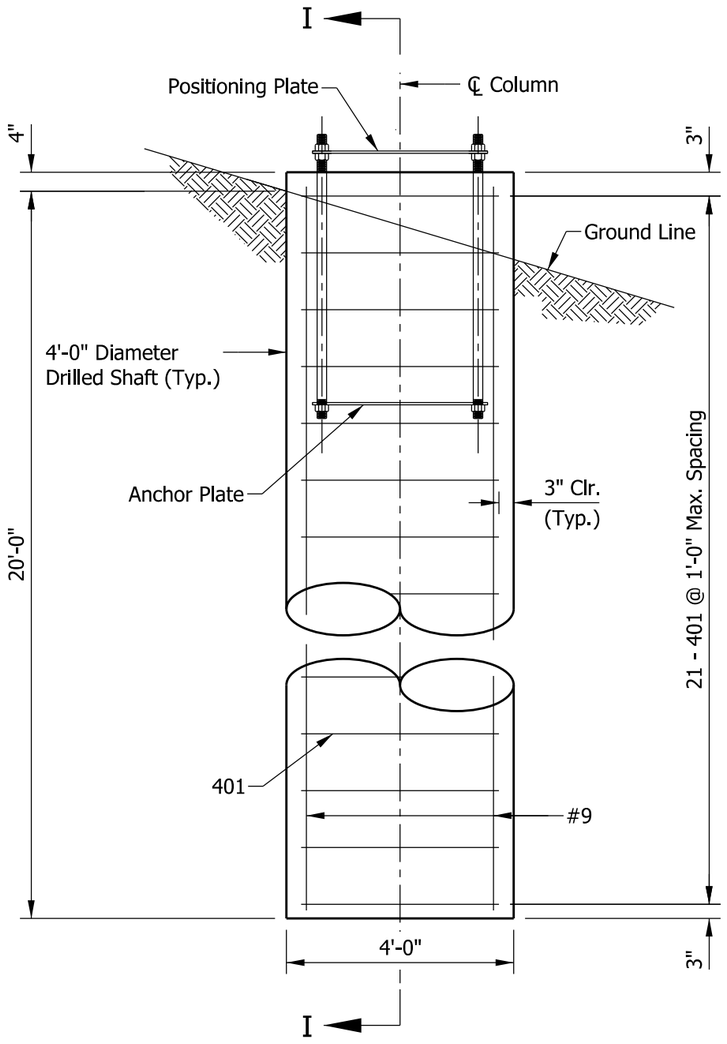

ELEVATION

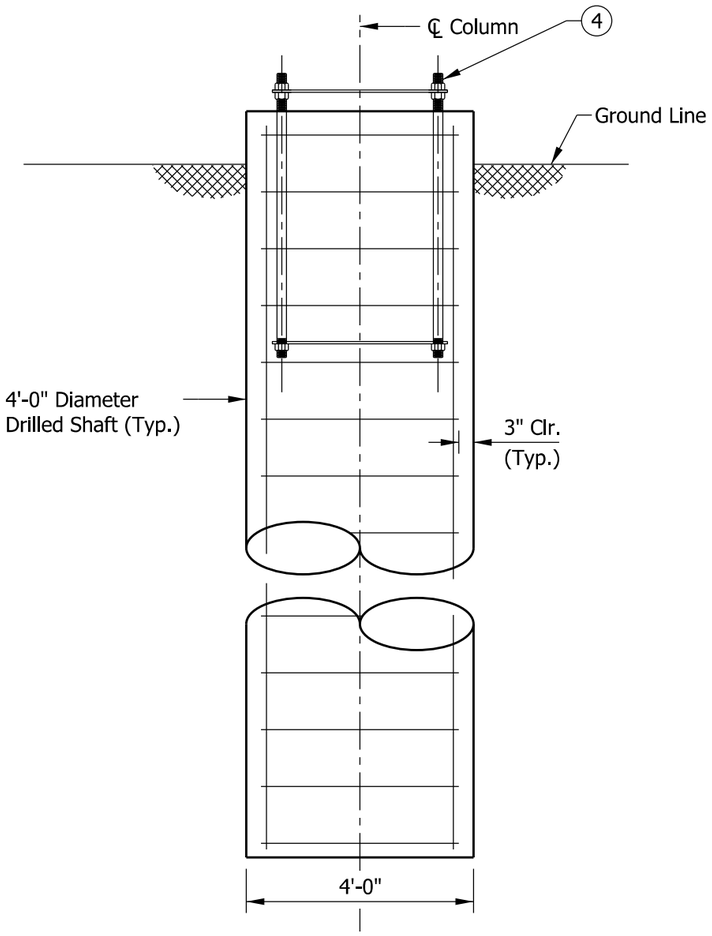

SECTION I-I

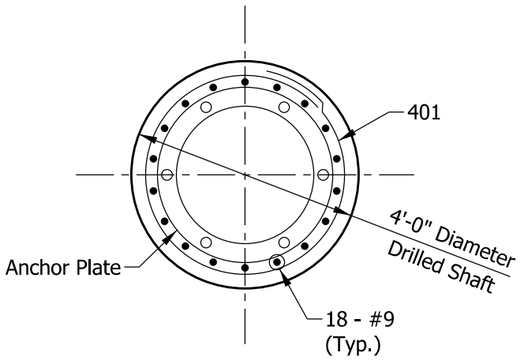

PLAN

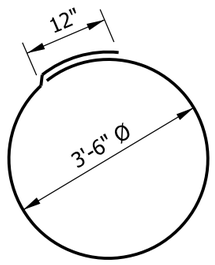

401 X 12'-0"

NOTES:

1. This standard foundation design is applicable for all tri-chord sign structures.
2. The design is based on clay soil with minimum unconfined shear strength of 750 psf or sandy soil with minimum friction angle of 30°.
3. All reinforcing bars to be epoxy coated.

(4) See Standard Drawing E 802-TCSS-12 for anchor bolts.

BILL OF MATERIALS			
EPOXY-COATED REINFORCING BARS			
MARK OR SIZE	NO. OF BARS	LENGTH	WEIGHT
901	18	20'-0"	
Total #9			1224 LBS
#4	21	12'-0"	
Total #4			168 LBS
Total Epoxy-Coated Reinforcing Bars			1392 LBS
MISCELLANEOUS			
Concrete, Class A			9.5 CYS
Surface Seal			0.5 SYS

INDIANA DEPARTMENT OF TRANSPORTATION

TRI-CHORD SIGN STRUCTURE DRILLED SHAFT FOUNDATION

SEPTEMBER 2013

STANDARD DRAWING NO. E 802-TCSS-14

ALFREDO B. HANZA REGISTERED No. 60020657 STATE OF INDIANA PROFESSIONAL ENGINEER

/s/ Alfredo B. Hanza 02/22/13
DESIGN STANDARDS ENGINEER DATE

/s/ Mark A. Miller 03/27/13
CHIEF ENGINEER DATE

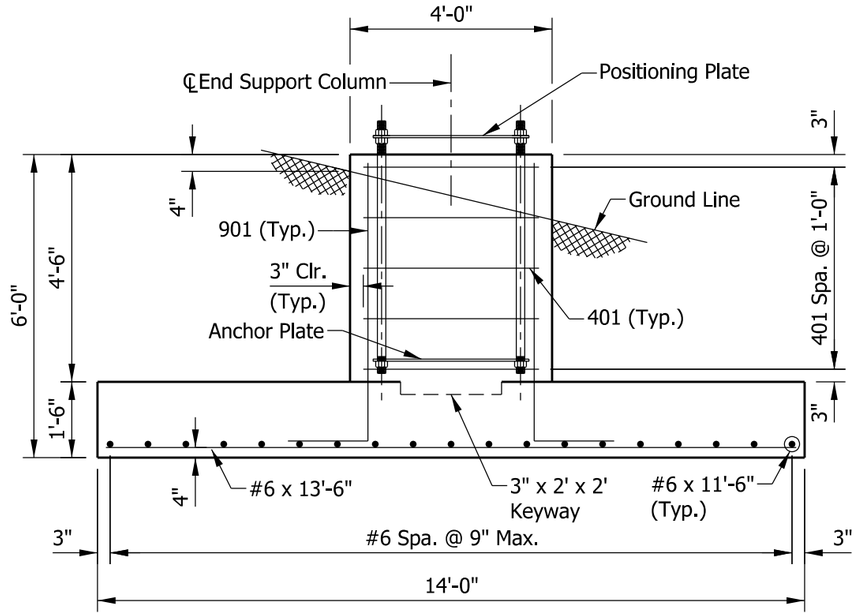

SECTION J-J

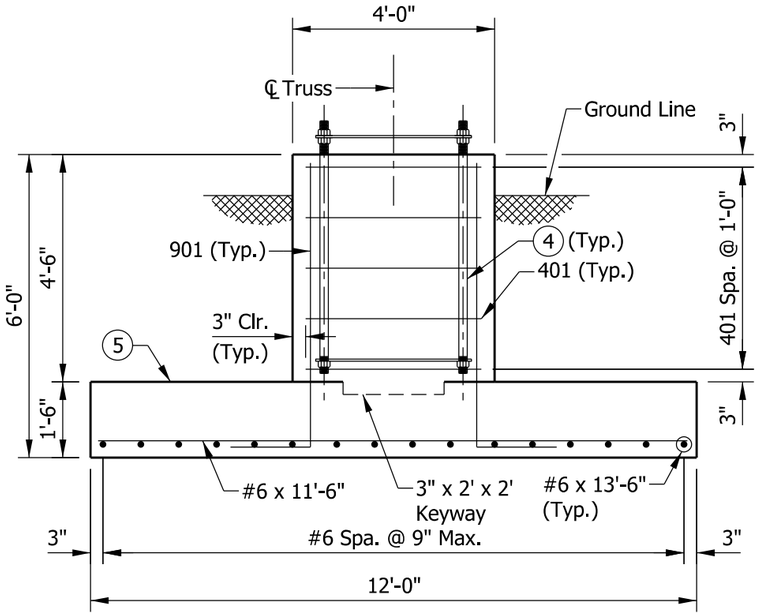

SECTION K-K

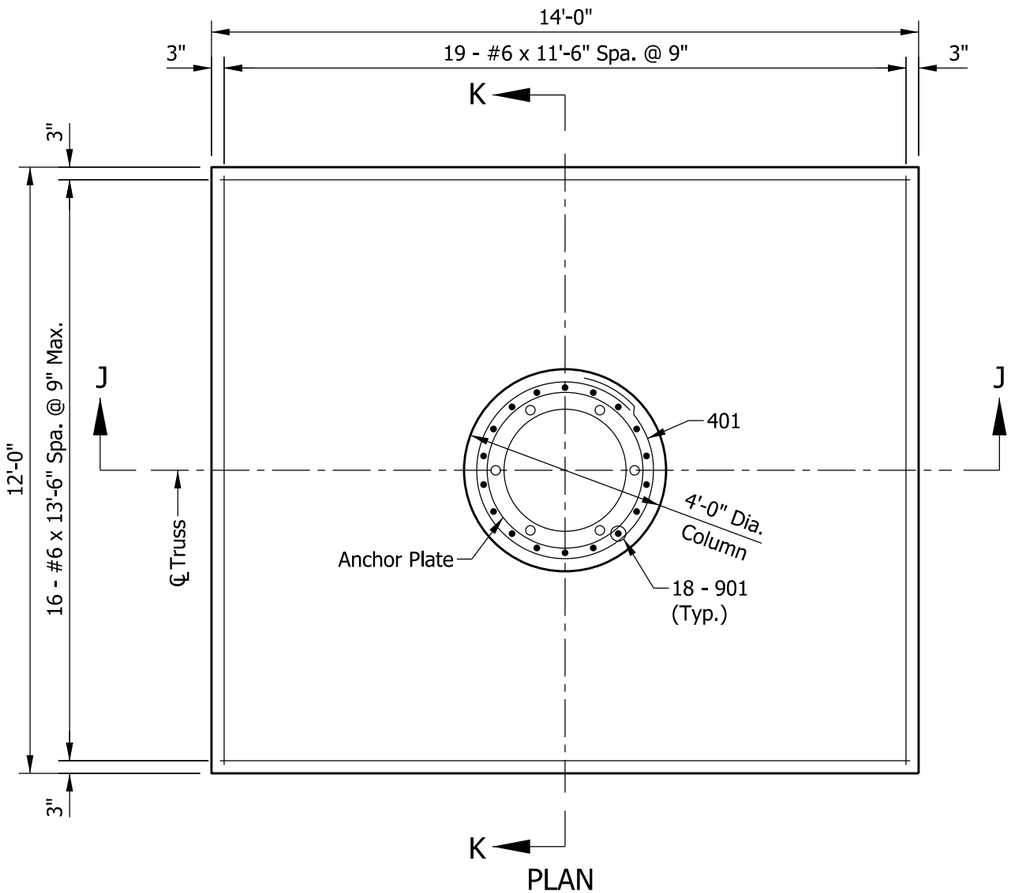

PLAN

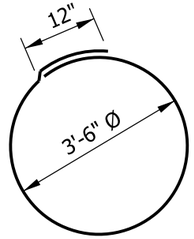

401 X 12'-0"

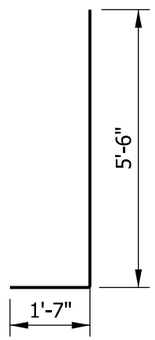

901 X 7'-1"

NOTES:

1. This standard foundation design is applicable for all tri-chord sign structures.
2. The design is based on allowable gross soil bearing pressure of 1500 psf.
3. All reinforcing bars to be epoxy coated.

(4) See Standard Drawing E 802-TCSS-12 for anchor bolts.

(5) Top of the footing shall be a minimum of 4'-0" below the pavement or ground line.

BILL OF MATERIALS			
EPOXY-COATED REINFORCING BARS			
MARK OR SIZE	NO. OF BARS	LENGTH	WEIGHT
901	18	7'-1"	
Total #9			434 LBS
#6	19	11'-6"	
#6	16	13'-6"	
Total #6			652 LBS
401	5	12'-0"	
Total #4			40 LBS
Total Epoxy-Coated Reinforcing Bars			1126 LBS
MISCELLANEOUS			
Concrete, Class A			11.4 CYS
Surface Seal			0.5 SYS

INDIANA DEPARTMENT OF TRANSPORTATION

TRI-CHORD SIGN STRUCTURE SPREAD FOUNDATION

SEPTEMBER 2013

STANDARD DRAWING NO. E 802-TCSS-15

ALFREDO B. HANZA
REGISTERED
No. 60020657
STATE OF INDIANA
PROFESSIONAL ENGINEER

/s/ Alfredo B. Hanza 02/22/13
DESIGN STANDARDS ENGINEER DATE

/s/ Mark A. Miller 03/27/13
CHIEF ENGINEER DATE

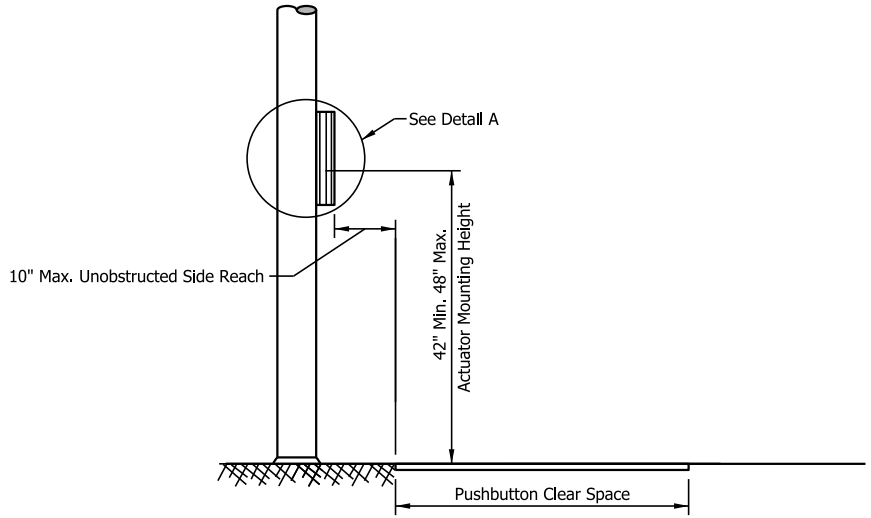

APPROACH TO PEDESTRIAN PUSHBUTTON ASSEMBLY MOUNTING

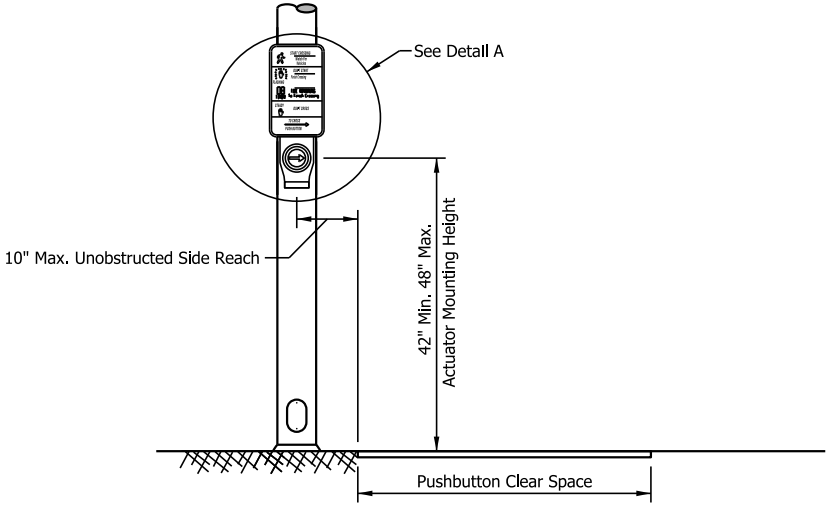

APPROACH TO PEDESTRIAN PUSHBUTTON ASSEMBLY MOUNTING

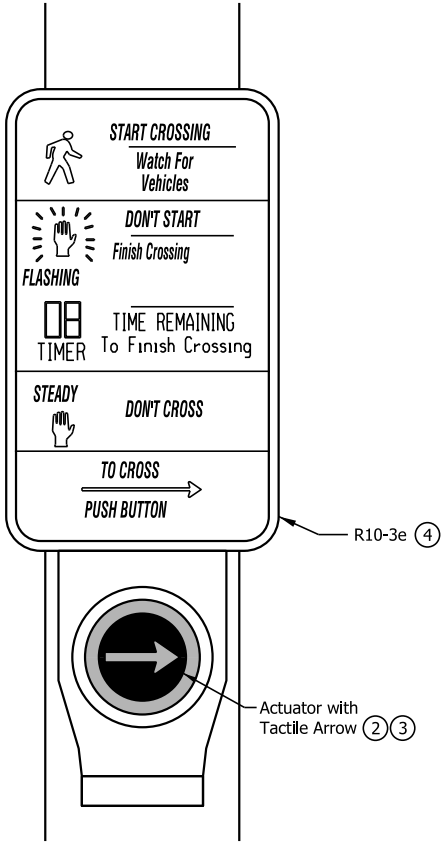

DETAIL A

NOTES:

1. The face of a pedestrian pushbutton assembly shall be aligned parallel to the direction of pedestrian travel on the associated crosswalk.
2. The actuator shall be a 2-in. minimum diameter and the color shall contrast with the housing or mounting. The actuator for an accessible pedestrian signal shall vibrate during the walk interval.
3. For an accessible pedestrian signal, a tactile arrow shall be provided. The tactile arrow can be part of the actuator or can be directly above or below the actuator. The tactile arrow color shall contrast with the background.
4. Pedestrian signal signs applicable to pedestrian actuation shall be mounted immediately above or incorporated into the pedestrian pushbutton assembly. For an extended actuator press function, the R10-32P sign shall be mounted adjacent to or integral with the pedestrian pushbutton assembly.
5. Where pole placement is limited, a 6 in. or 12 in. pushbutton assembly extension may be used to meet the side reach requirements.
6. See Standard Drawing E 805-PPBA-02 and -03 for Typical Pedestrian Pushbutton Assembly Locations.

INDIANA DEPARTMENT OF TRANSPORTATION

PEDESTRIAN PUSHBUTTON ASSEMBLY DETAILS

SEPTEMBER 2017

STANDARD DRAWING NO. E 805-PPBA-01

DAVID H. BORUFF REGISTERED No. 60900348 STATE OF INDIANA PROFESSIONAL ENGINEER

/s/ David H. Boruff 10/26/16
DESIGN STANDARDS ENGINEER DATE

/s/ Mark A. Miller 11/01/16
CHIEF ENGINEER DATE

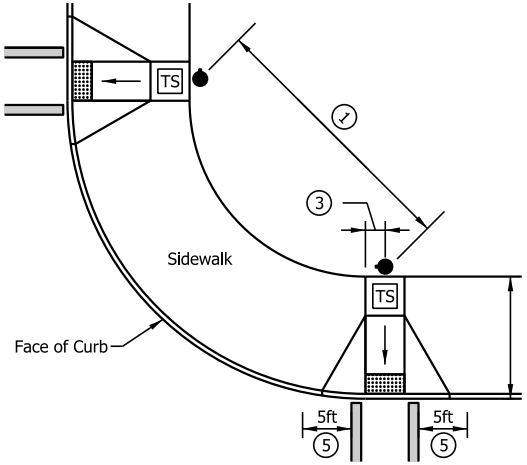

PERPENDICULAR RAMPS
ROADWAY TO BACK OF SIDEWALK
10 FT OR LESS

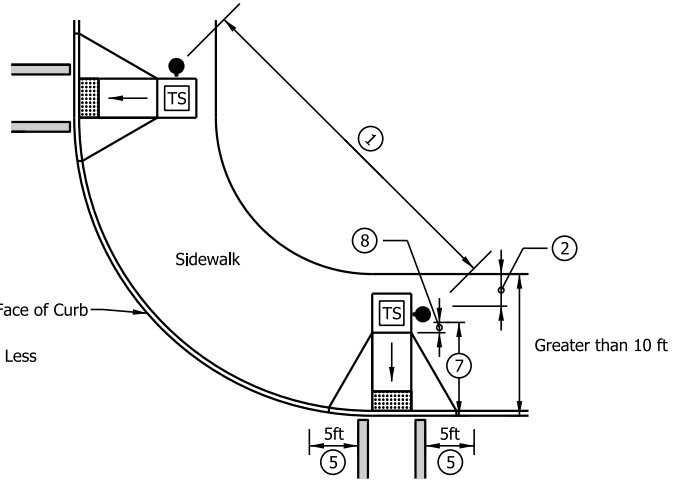

PERPENDICULAR RAMPS,
ROADWAY TO BACK OF SIDEWALK
GREATER THAN 10 FT

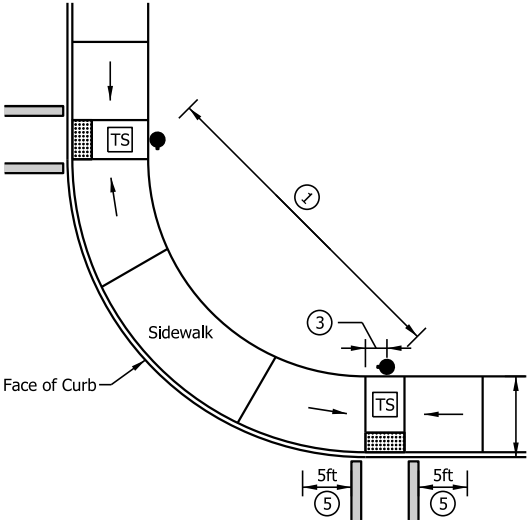

PARALLEL RAMP
ROADWAY TO BACK OF SIDEWALK
10 FT OR LESS

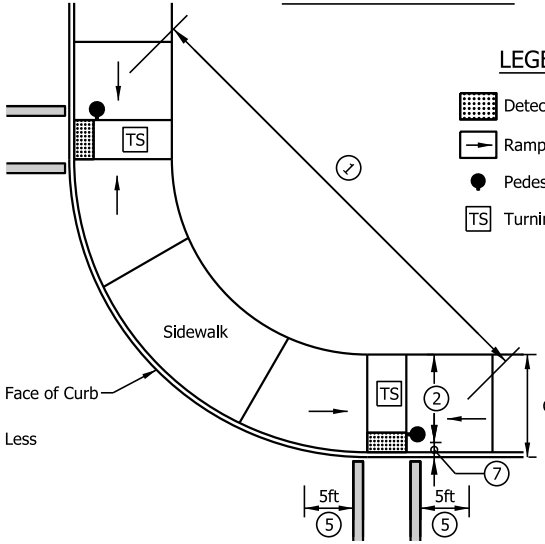

PARALLEL RAMP
ROADWAY TO BACK OF SIDEWALK
GREATER THAN 10 FT

LEGEND:

- Detectable Warning Surface
- Ramp
- Pedestrian Pushbutton Assembly
- TS Turning Space\Pushbutton Clear Space

NOTES:

1. Where two pedestrian pushbutton assemblies are provided on the same corner or median, the pedestrain pushbutton assemblies should be separated by at least 10 ft. Where constraints prevent a 10 ft separation, pedestrian pushbutton assemblies may be placed closer together or on the same pole. Where accessible pedestrian signal pushbutton assemblies are closer than 10 ft, the assemblies shall be in accordance with IMUTCD 4E.10.
2. A 4-ft minimum sidewalk clear width shall be provided where a pedestrian pushbutton assembly is placed within a sidewalk. A pedestrian pushbutton assembly should be adjacent a pushbutton clear space.
3. A pedestrian pushbutton assembly should be centered and adjacent a pushbutton clear space.
4. A pushbutton clear space shall have minimum clear dimension of 4 ft x 4 ft.
5. A pedestrian pushbutton assembly should not be placed more than 5 ft outside the crosswalk.
6. A pedestrian pushbutton assembly should not be placed adjacent a ramp with a running slope greater than 2%.
7. The distance from the nearest face of a pedestrian pushbutton assembly to face of the curb or edge of pavement should be between 1.5 ft and 6 ft and should not be greater than 10 ft.
8. The distance from the nearest face of a pedestrain pushbutton assembly to a grade break should not be less than 1.5 ft.
9. See Standard Drawing E 805-PPBA-01 for Pedestrian Pushbutton Assembly Details.

INDIANA DEPARTMENT OF TRANSPORTATION

TYPICAL PEDESTRIAN PUSHBUTTON ASSEMBLY LOCATIONS

SEPTEMBER 2017

STANDARD DRAWING NO. E 805-PPBA-02

DAVID H. BORUFF REGISTERED No. 60900348 STATE OF INDIANA PROFESSIONAL ENGINEER

/s/ David H. Boruff 10/26/16
DESIGN STANDARDS ENGINEER DATE

/s/ Mark A. Miller 11/01/16
CHIEF ENGINEER DATE

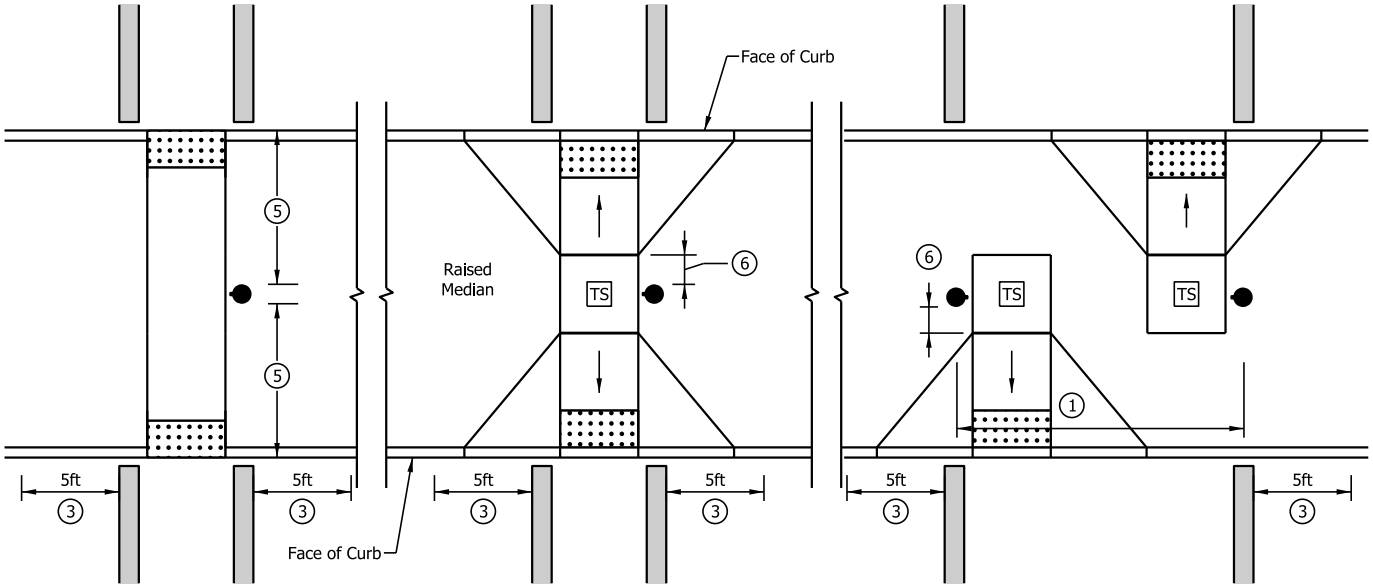

MEDIAN CROSSING

NOTES:

1. Where two pedestrian pushbutton assemblies are provided on the same corner or median, the pedestrain pushbutton assemblies should be separated by at least 10 ft. Where constraints prevent a 10 ft separation, pedestrian pushbutton assemblies may be placed closer together or on the same pole. Where accessible pedestrian signal pushbutton assemblies are closer than 10 ft, the assemblies shall be in accordance with IMUTCD 4E.10.
2. A pedestrian pushbutton assembly should be adjacent a pushbutton clear space. A pushbutton clear space shall have a minimum clear dimension of 4 ft x 4 ft.
3. The pedestrian pushbutton assembly should not be placed more than 5 ft outside the crosswalk.
4. A pedestrian pushbutton assembly should not be placed adjacent a ramp with a running slope greater than 2%.
5. The distance from the nearest face of a pedestrian pushbutton assembly to face of the curb or edge of pavement should be between 1.5 ft and 6 ft and should not be greater than 10 ft.
6. The distance from the nearest face of a pedestrian pushbutton assembly to a grade break should not be less than 1.5 ft.
7. See Standard Drawing E 805-PPBA-01 for Pedestrian Pushbutton Assembly Details.

LEGEND:

- Detectable Warning Surface
- Ramp
- Pedestrian Pushbutton Assembly
- TS Turning Space\Pushbutton Clear Space

INDIANA DEPARTMENT OF TRANSPORTATION

TYPICAL PEDESTRIAN PUSHBUTTON ASSEMBLY LOCATIONS

SEPTEMBER 2017

STANDARD DRAWING NO. E 805-PPBA-03

DAVID H. BORUFF REGISTERED No. 60900348 STATE OF INDIANA PROFESSIONAL ENGINEER

/s/ David H. Boruff 10/26/16
DESIGN STANDARDS ENGINEER DATE

/s/ Mark A. Miller 11/01/16
CHIEF ENGINEER DATE

INDEX	
SHEET NO.	SUBJECT
1	Index
2	Pole Dimensions and Details
3	Arm Dimensions and Details
4	Base Plate and Pole Top Cover Details
5	Arm Connection Details
6	Handhole and I.D. Tag Details
7	Loading Diagrams
8	Foundation, Drilled Shaft Type E, for Dual Arms 35' or Less
9	Foundation, Drilled Shaft Type F, for Dual Arms Greater Than 35' to 45'

INDIANA DEPARTMENT OF TRANSPORTATION

SIGNAL DUAL ARM CANTILEVERS
DRAWING INDEX

SEPTEMBER 2013

STANDARD DRAWING NO. E 805-SDAC-01

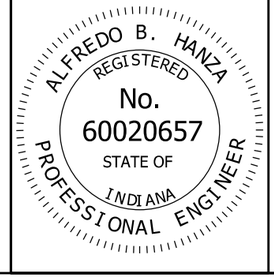

/s/ Alfredo B. Hanza *02/05/13*
DESIGN STANDARDS ENGINEER DATE

/s/ Mark A. Miller *03/27/13*
CHIEF ENGINEER DATE

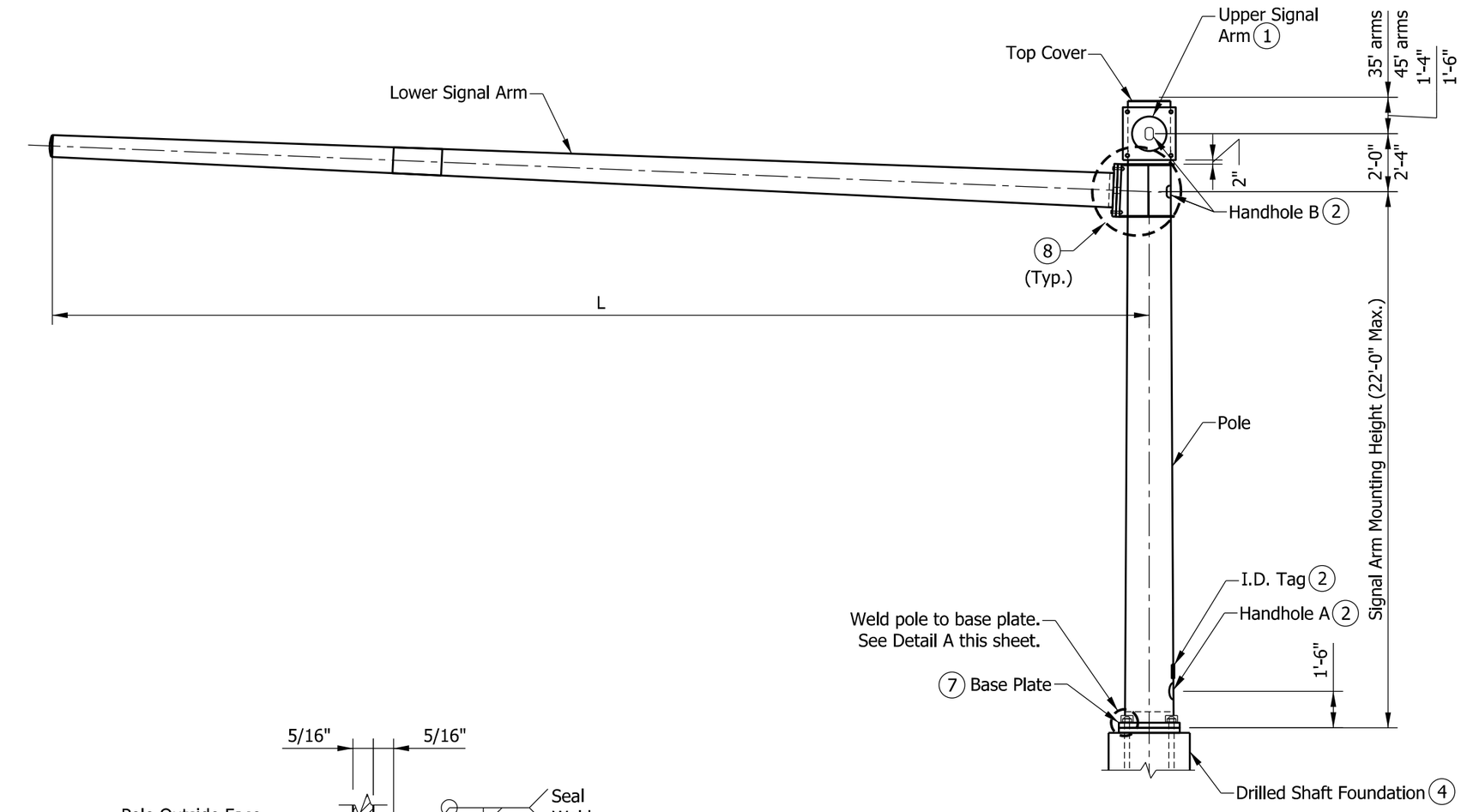

ELEVATION

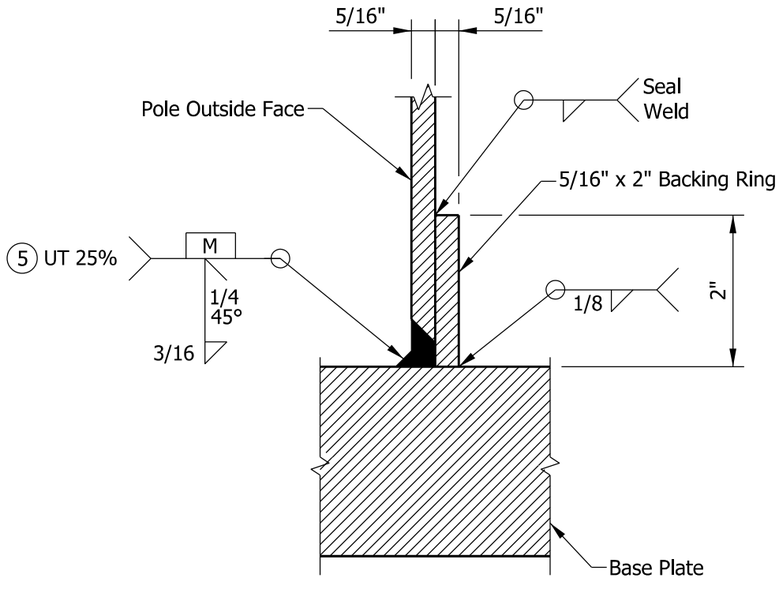

POLE/BASE PLATE WELD DETAIL A

POLE DIMENSIONS (6)		
CANTILEVER ARM LENGTHS L (FT)	BASE DIAMETER (IN.)	WALL THICKNESS (IN.)
15' to 35'	18	5/16
> 35' to 45'	24	5/16

NOTES:

(1) This structure is a dual arm cantilever design for traffic signals. Cantilever arms can be positioned at 20° to 180° to each other.

(2) See Standard Drawing E 805-SDAC-06 for handhole and I.D. tag details.

3. See Standard Drawings E 805-SGGR-01 through -03 for grounding details.

(4) See Standard Drawings E 805-SDAC-08 and -09 for foundation details.

(5) A minimum of 25% of the pole to base plate welds shall be ultransonically tested (UT).

(6) Pole and arms may be octagonal or circular shaped and shall have a 0.14 in./ft taper. All member diameters shown are outside diameter.

(7) See Standard Drawing E 805-SDAC-04 for base plate details.

(8) See Standard Drawing E 805-SDAC-05 for arm connection details.

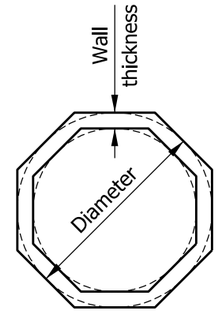

OCTAGON AND CIRCULAR TUBULAR SHAPE (6)

INDIANA DEPARTMENT OF TRANSPORTATION

SIGNAL DUAL ARM CANTILEVERS
POLE DIMENSIONS AND DETAILS

SEPTEMBER 2013

STANDARD DRAWING NO. E 805-SDAC-02

ALFREDO B. HANZA REGISTERED No. 60020657 STATE OF INDIANA PROFESSIONAL ENGINEER

/s/ Alfredo B. Hanza 02/05/13
DESIGN STANDARDS ENGINEER DATE

/s/ Mark A. Miller 03/27/13
CHIEF ENGINEER DATE

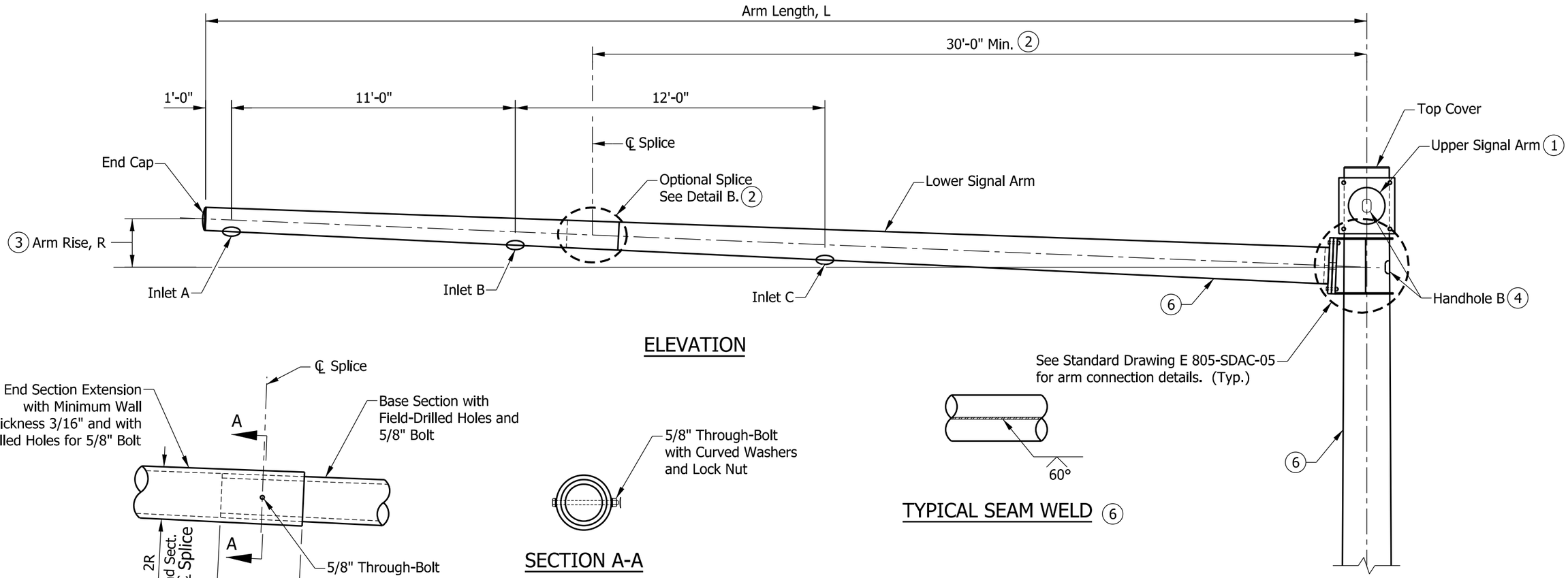

ELEVATION

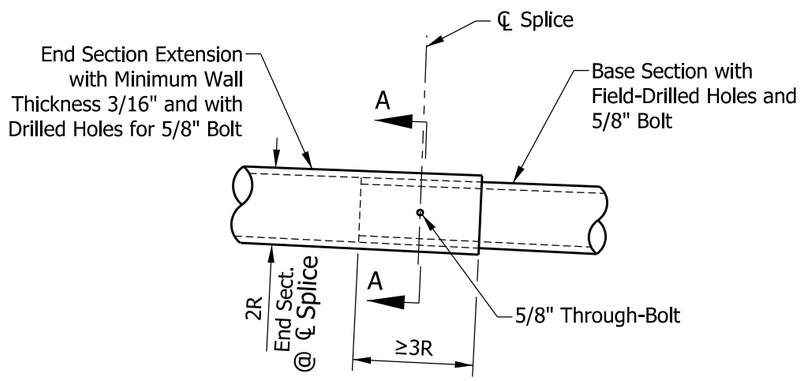

DETAIL B

SECTION A-A

TYPICAL SEAM WELD (6)

SIGNAL DUAL ARM CANTILEVER DATA				
ARM LENGTH L (FT.)	ARM DIAMETER AT POLE (IN.)	ARM WALL THICKNESS (IN.)	ARM RISE R (IN.) (3)	CABLE INLETS
15	14	5/16	7 1/2	A, B
20	14	5/16	10	A, B
25	14	5/16	12 1/2	A, B
30	14	5/16	15	A, B
35	14	5/16	17 1/2	A, B, C
40	17	5/16	20	A, B, C
45	17	5/16	22 1/2	A, B, C

NOTES:

(1) Upper signal arm can be oriented 20° to 180° from lower signal arm. The dimensions and details shall be as shown on this drawing.

(2) Optional splices can be used for greater than 40' mast arms. The splice shall be located a minimum of 30' from the pole. The end extension section of the arm shall have a wall thickness of 3/16" or greater. Field assembly to achieve a snug tight joint (min. overlap not less than 3 times the inside radius ofthe end section).

(3) Arm rise is measured in the undeflected position without vertical loads on the arm.

(4) See Standard Drawing E 805-SDAC-06 for handhole B details.

5. See Standard Drawing E 805-SDAC-07 for loading diagrams.

(6) If seam welds are used, the weld location shall be along the bottom for the arms, and on the side of pole as shown. All pole and arm seam welds shall be 100% ultrasonically tested.

7. Number of cable inlets depends on arm L (see table on this sheet). The inlet diameter shall be 1 3/4" with rubber grommet (typ.).

INDIANA DEPARTMENT OF TRANSPORTATION

SIGNAL DUAL ARM CANTILEVERS
ARM DIMENSIONS AND DETAILS

SEPTEMBER 2013

STANDARD DRAWING NO. E 805-SDAC-03

/s/ Alfredo B. Hanza 02/05/13
DESIGN STANDARDS ENGINEER DATE

/s/ Mark A. Miller 03/27/13
CHIEF ENGINEER DATE

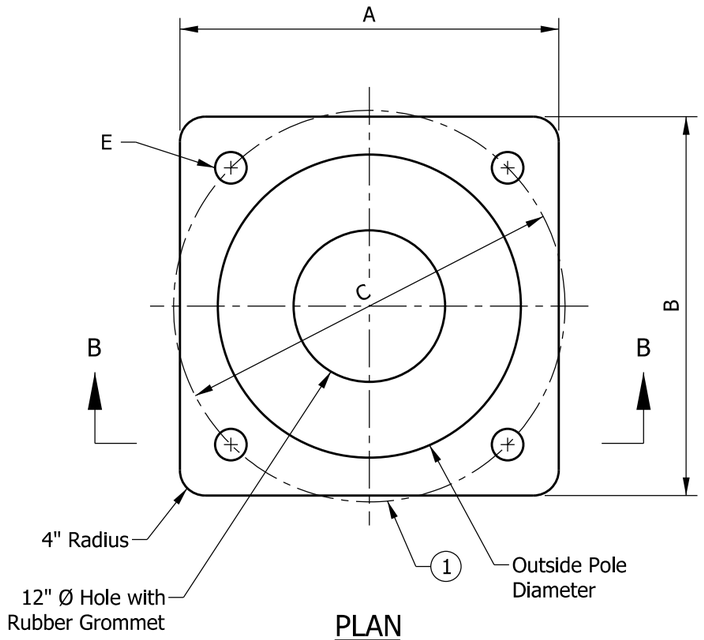

PLAN

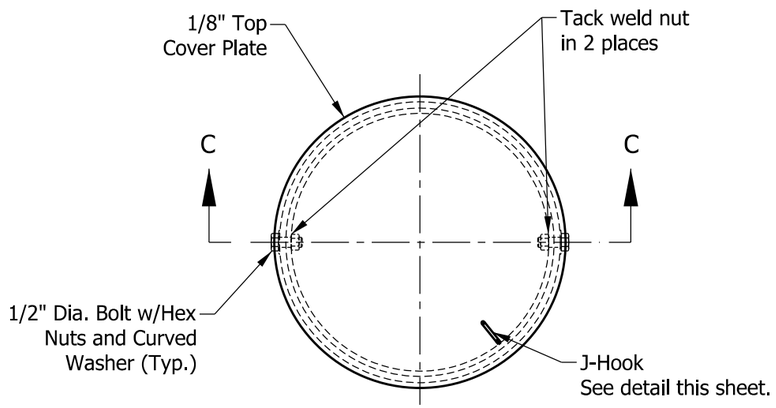

PLAN
TOP COVER - STEEL COLUMN

NOTES:

1. Anchor bolt circle shall allow clearance for the anchor bolt washers. Cutting or trimming of the washers will not be allowed.
2. See Standard Drawing E 805-SDAC-02 for handhole locations.
3. See Standard Drawing E 805-SDAC-06 for handhole details.

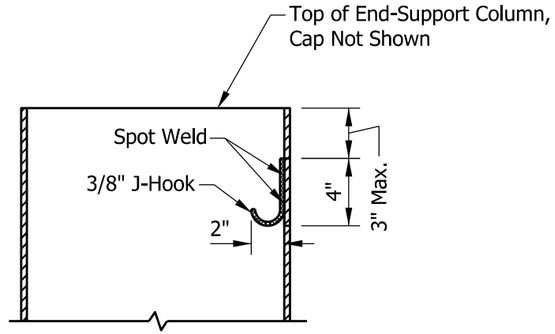

CABLE J-HOOK

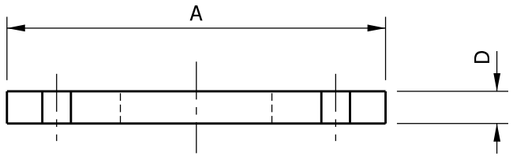

SECTION B-B
BASE PLATE

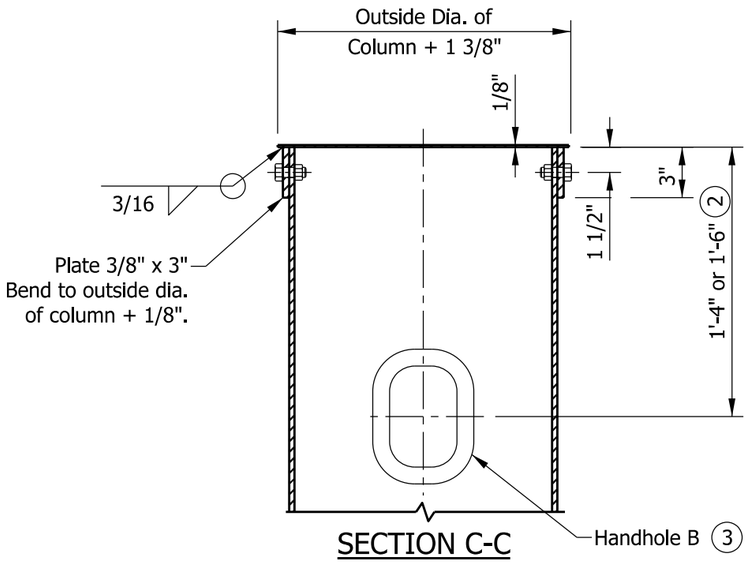

SECTION C-C

BASE PLATE DATA				
POLE DIAMETER (IN.)	PLATE DIMENSIONS A X B (IN. X IN.)	ANCHOR BOLTS CIRCLE C (IN.)	PLATE THICKNESS D (IN.)	BOLT HOLE DIAMETER E (IN.)
18	26 x 26	25	2 1/4	2 9/16
24	30 x 30	31	2 1/2	2 13/16

INDIANA DEPARTMENT OF TRANSPORTATION

SIGNAL DUAL ARM CANTILEVERS
BASE PLATE AND POLE TOP COVER DETAILS

SEPTEMBER 2013

STANDARD DRAWING NO. E 805-SDAC-04

ALFREDO B. HANZA
REGISTERED
No. 60020657
STATE OF INDIANA
PROFESSIONAL ENGINEER

/s/ Alfredo B. Hanza 02/05/13
DESIGN STANDARDS ENGINEER DATE

/s/ Mark A. Miller 03/27/13
CHIEF ENGINEER DATE

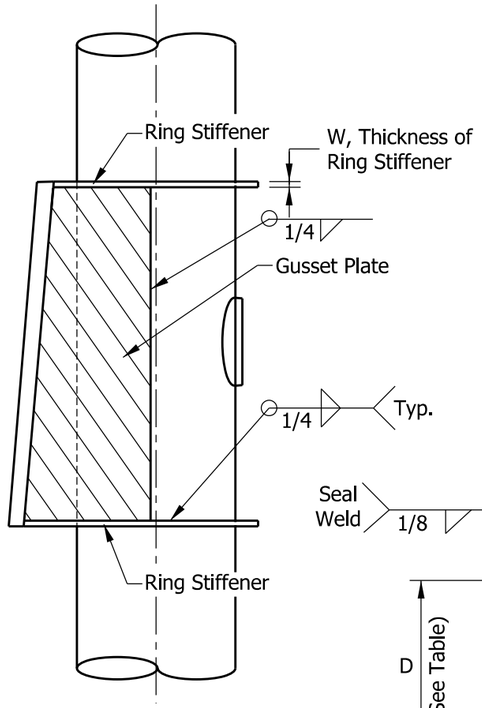

ELEVATION OF GUSSET PLATE

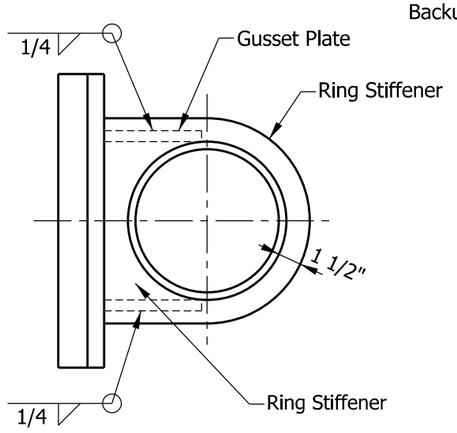

TOP OF GUSSET PLATE

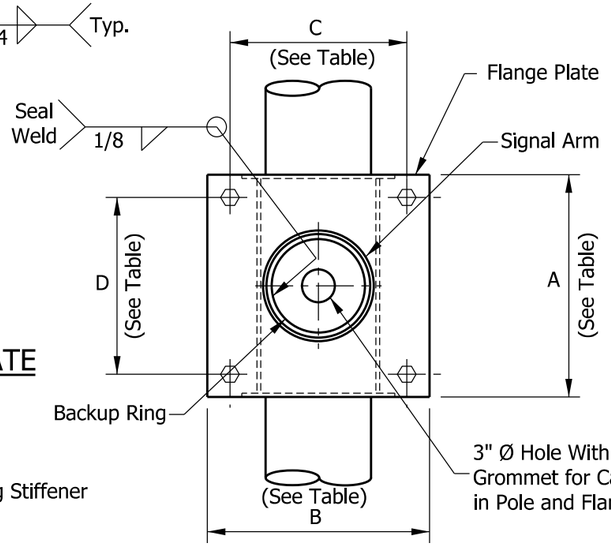

SECTION D-D

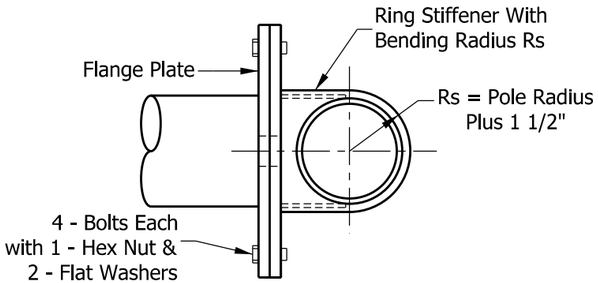

SECTION E-E

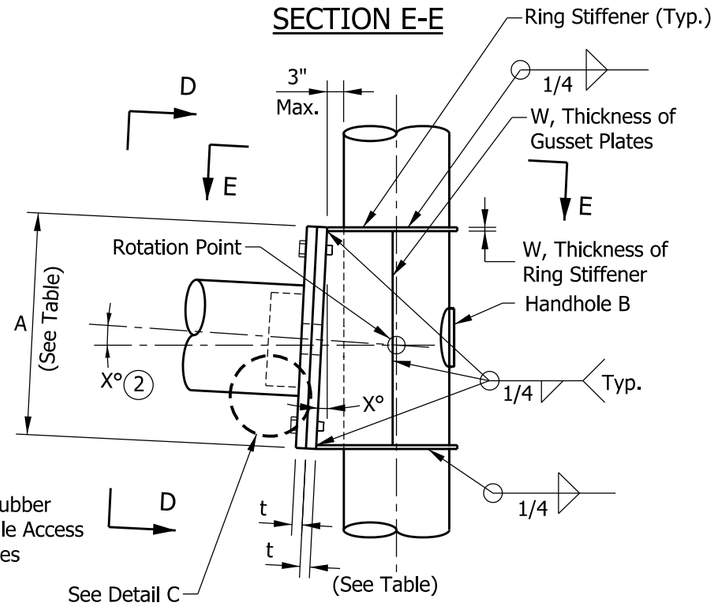

ELEVATION

SIGNAL ARM CONNECTION DETAIL

NOTES:

1. See Standard Drawing E 805-SDAC-06 for Handhole B details.
2. The required signal arm rise shall be built into the gusset plate at the angle X. The angle X is described as arc tan R/L, where R is the arm rise and L is the arm length. Both R and L vary and are listed in the Signal Dual Arm Cantilever Data table on Standard Drawing E 805-SDAC-03.

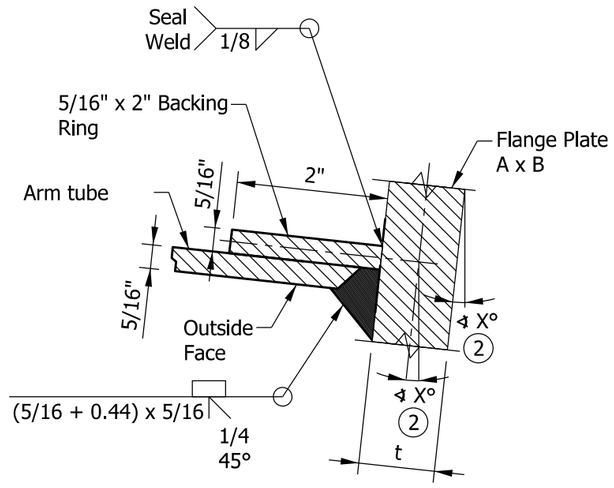

DETAIL C
ARM WELD

TABLE OF PLATES AND BOLTS FOR SIGNAL DUAL ARM CANTILEVER						
ARM LENGTH (FT)	FLANGE PLATE A X B (IN.)	BOLT PATTERN C X D (IN. X IN.)	RING STIFFENER & GUSSET PLATE THICKNESS W (IN.)	FLANGE PLATE THICKNESS t (IN.)	BOLT DIAMETER (IN.)	BOLT LENGTH (IN.)
15 to 35	22 x 22	17 1/2 x 17 1/2	3/8	1 1/2	1 1/4	5
> 35 to 45	26 x 26	21 1/2 x 21 1/2	1/2	2	1 1/2	6

INDIANA DEPARTMENT OF TRANSPORTATION

SIGNAL DUAL ARM CANTILEVERS
ARM CONNECTION DETAILS

SEPTEMBER 2013

STANDARD DRAWING NO. E 805-SDAC-05

ALFREDO B. HANZA
REGISTERED
No. 60020657
STATE OF INDIANA
PROFESSIONAL ENGINEER

/s/ Alfredo B. Hanza 02/05/13
DESIGN STANDARDS ENGINEER DATE

/s/ Mark A. Miller 03/27/13
CHIEF ENGINEER DATE

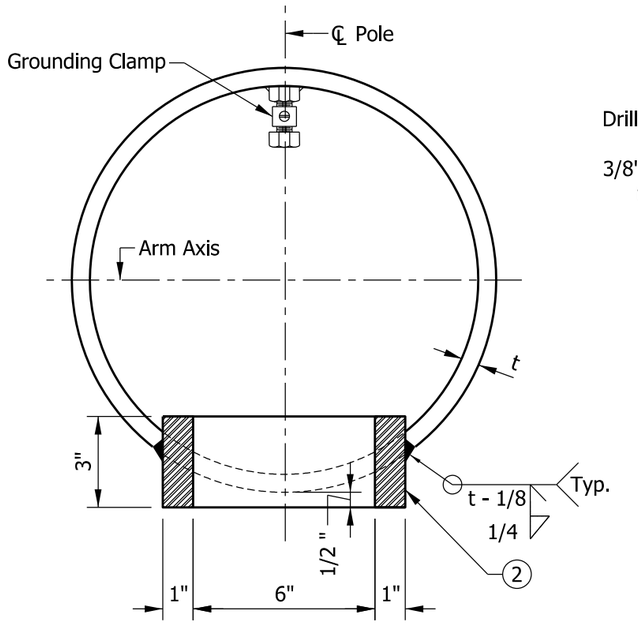

HANDHOLE A
SECTION ACROSS POLE

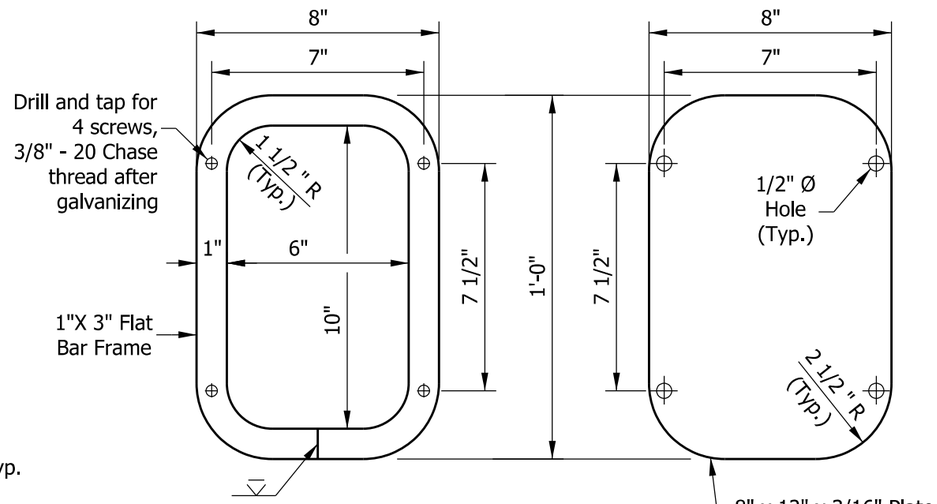

FRAME DETAIL COVER

HANDHOLE A

NOTES:

1. Handhole A to be used at the base of the pole. Handhole B to be used at all other locations.
2. In lieu of fabricated handhole frame as shown, frame may be cut from 3" plate (rolling direction vertical).
3. See Standard Drawing E 805-SDAC-02 for handhole locations.
4. I.D. tag is a 1/8" stainless steel plate with the following information stamped in 1/2" black letters:

Manufacturer _____, Drawing/Order #_____
Contract #_____, Structure Type _____
Fabrication Date _____, Pole Mounting Height _____

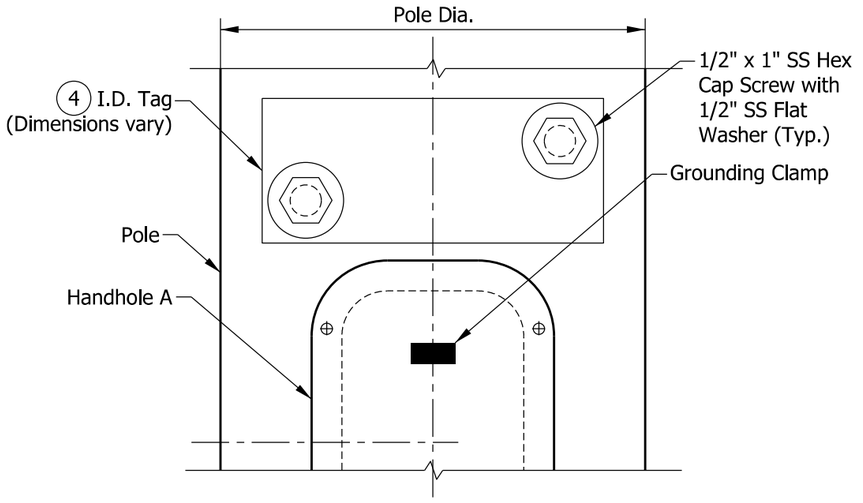

PARTIAL ELEVATION
AT HANDHOLE A

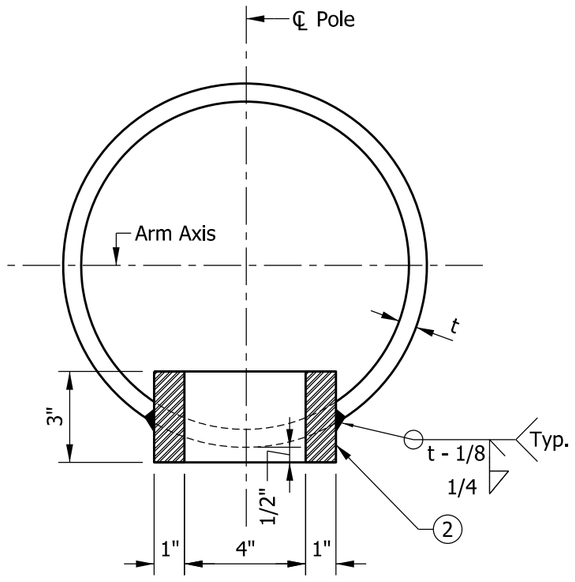

HANDHOLE B
SECTION ACROSS POLE

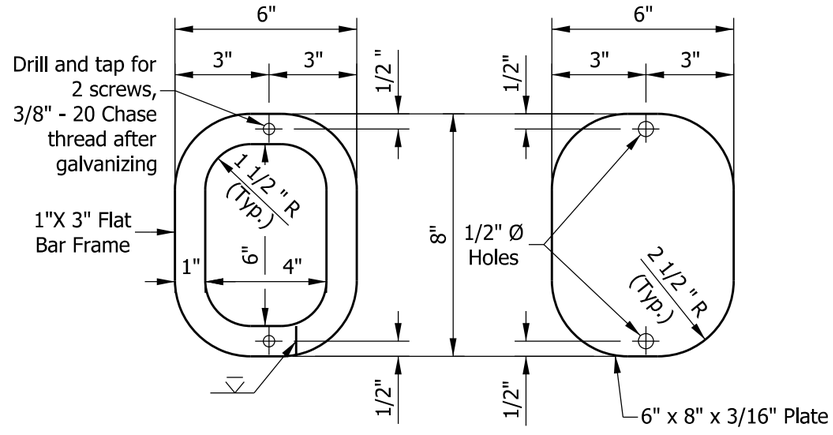

FRAME DETAIL COVER

HANDHOLE B

INDIANA DEPARTMENT OF TRANSPORTATION

SIGNAL DUAL ARM CANTILEVERS
HANDHOLE AND I.D. TAG DETAILS

SEPTEMBER 2013

STANDARD DRAWING NO. E 805-SDAC-06

ALFREDO B. HANZA
REGISTERED
No.
60020657
STATE OF
INDIANA
PROFESSIONAL ENGINEER

/s/ Alfredo B. Hanza 02/05/13
DESIGN STANDARDS ENGINEER DATE

/s/ Mark A. Miller 03/27/13
CHIEF ENGINEER DATE

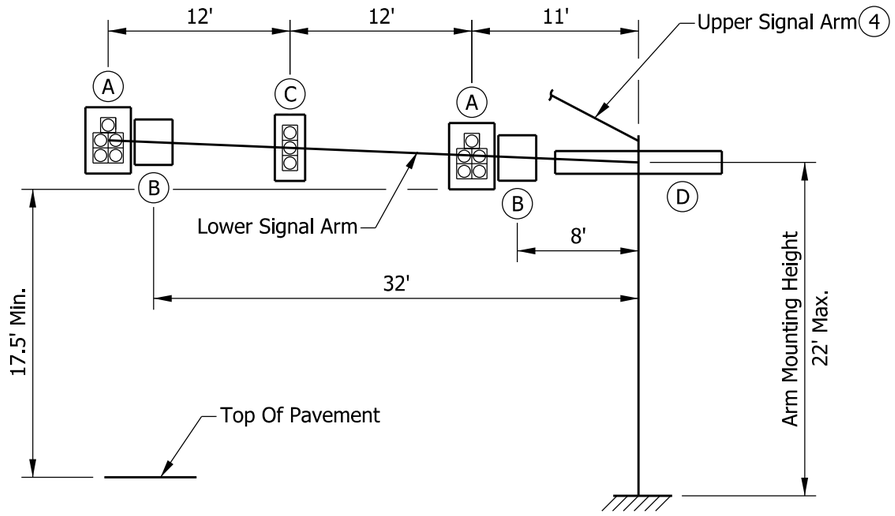

35' ARMS

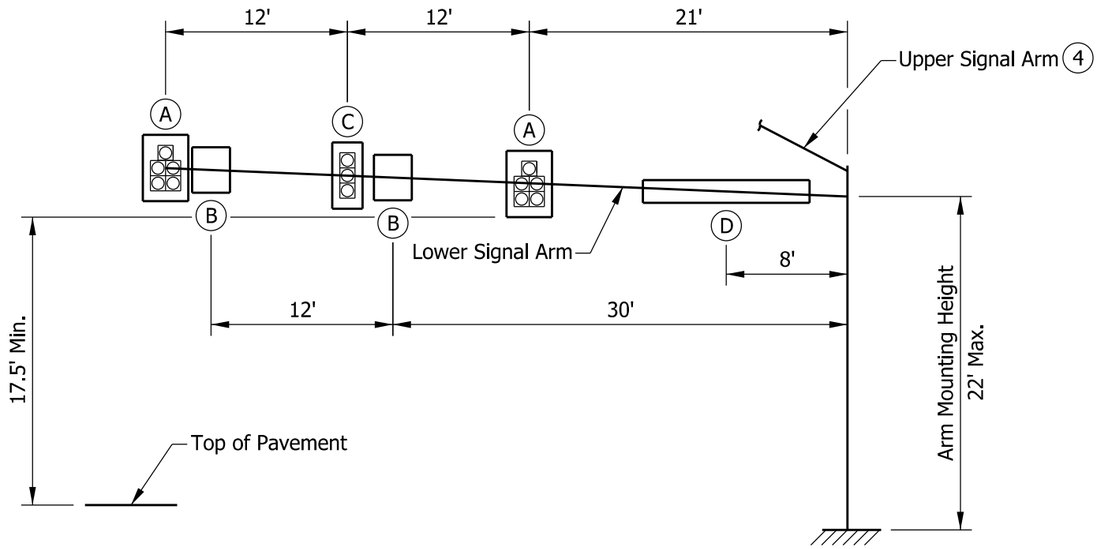

45' ARMS

NOTES:

1. The arms and pole are designed for the loading conditions shown. For arm lengths shorter than 35', the loading shall not exceed the loading shown for the 35' arm length.
2. Foundation Type E is designed for arm length of 35' or less. See Standard Drawing E 805-SDAC-08.
3. Foundation Type F is designed for arm length of greater than 35' to 45'. See Standard Drawing E 805-SDAC-09.

(4) Both arms can be loaded as shown in loading diagrams.

SIGNAL AND SIGN LOADING INFORMATION TABLE			
DEVICE	DESCRIPTION	DEVICE AREA (SQ FT)	WEIGHT (LBS)
(A)	12" - 5 section signal head with backplates	14.5	69
(B)	36" x 30" regulatory sign	7.5	19
(C)	12" - 3 section signal head with backplates	10.1	55
(D)	18" x 11'-0" street name sign	16.5	41

INDIANA DEPARTMENT OF TRANSPORTATION

SIGNAL DUAL ARM CANTILEVERS
LOADING DIAGRAMS

SEPTEMBER 2013

STANDARD DRAWING NO. E 805-SDAC-07

ALFREDO B. HANZA REGISTERED No. 60020657 STATE OF INDIANA PROFESSIONAL ENGINEER

/s/ Alfredo B. Hanza 02/05/13
DESIGN STANDARDS ENGINEER DATE

/s/ Mark A. Miller 03/27/13
CHIEF ENGINEER DATE

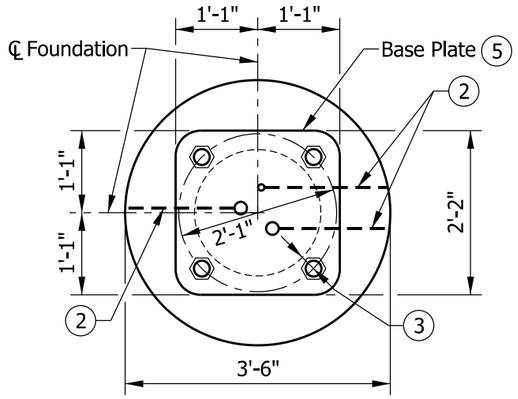

PLAN

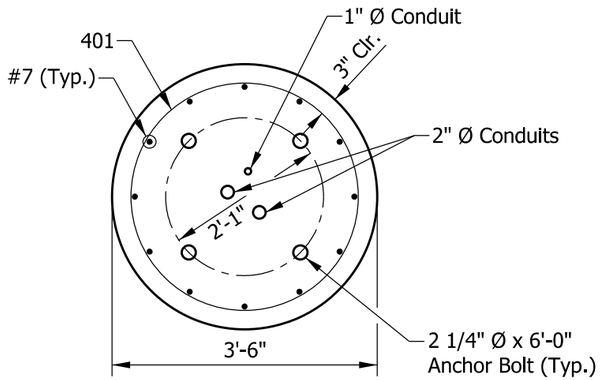

SECTION F-F

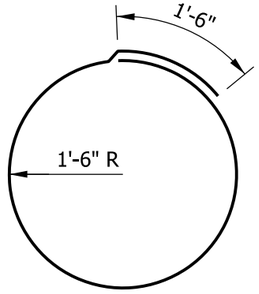

401 X 11'-0"

NOTES:

1. The Type E foundations are to be used for 35' dual arm structures and cohesive soil with minimum Q_u = 750 lb/ft or sand with minimum friction angle 30°.
2. A tooled line or other permanent marking shall be provided on the top of the foundation to indicate the direction of the conduits' exit ends.
3. 2 1/2" minimum clearance to weld at pole. Anchor bolt circle shall allow clearance for the anchor bolt washers. Cutting or trimming of the washers will not be allowed.
4. The foundation shall be poured monolithically and shall have no construction joint.
5. See Standard Drawing E 805-SDAC-04 for base plate details.

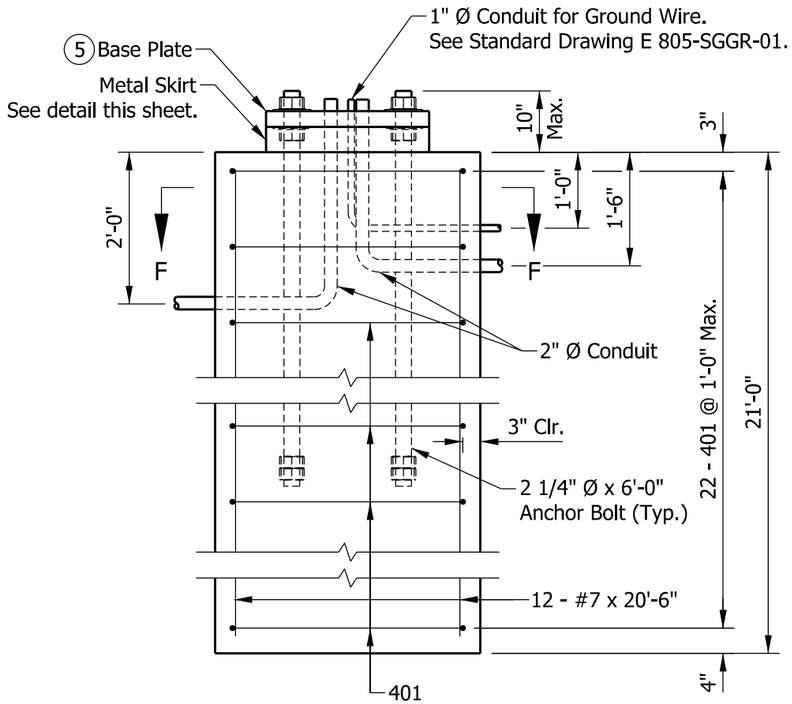

DRILLED SHAFT
ELEVATION

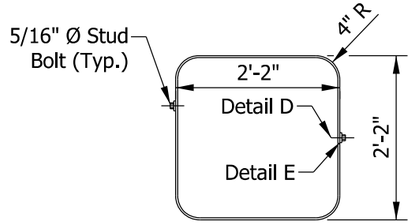

PLAN

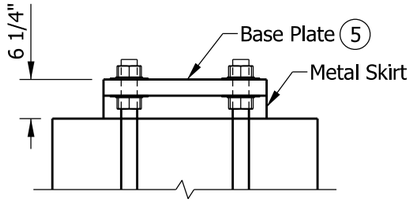

ELEVATION

METAL SKIRT DETAIL

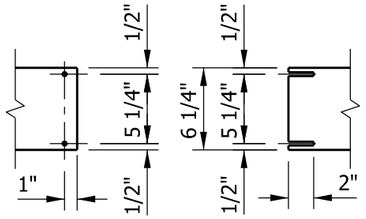

DETAIL D DETAIL E

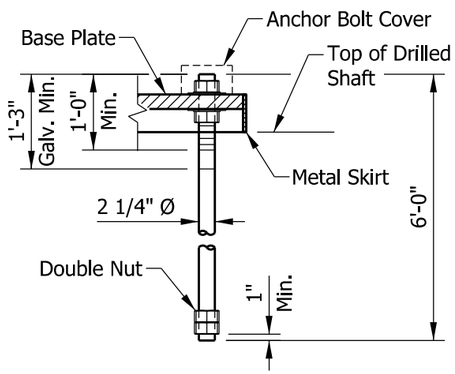

ANCHOR BOLT DETAIL

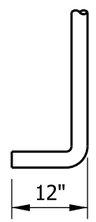

ALTERNATE ANCHOR BOLT HOOK

BILL OF MATERIALS			
REINFORCING BARS			
MARK OR SIZE	NO. OF BARS	LENGTH	WEIGHT
#7	12	20'-6"	
Total #7			503 LBS
401	22	11'-0"	
Total #4			162 LBS
Total Reinforcing Bars			665 LBS
CONCRETE			
Concrete, Class A			7.5 CYS

INDIANA DEPARTMENT OF TRANSPORTATION

SIGNAL DUAL ARM CANTILEVERS FOUNDATION, DRILLED SHAFT TYPE E FOR DUAL ARMS 35' OR LESS

SEPTEMBER 2013

STANDARD DRAWING NO. E 805-SDAC-08

ALFREDO B. HANZA REGISTERED No. 60020657 STATE OF INDIANA PROFESSIONAL ENGINEER

/s/ Alfredo B. Hanza 02/05/13
DESIGN STANDARDS ENGINEER DATE

/s/ Mark A. Miller 03/27/13
CHIEF ENGINEER DATE

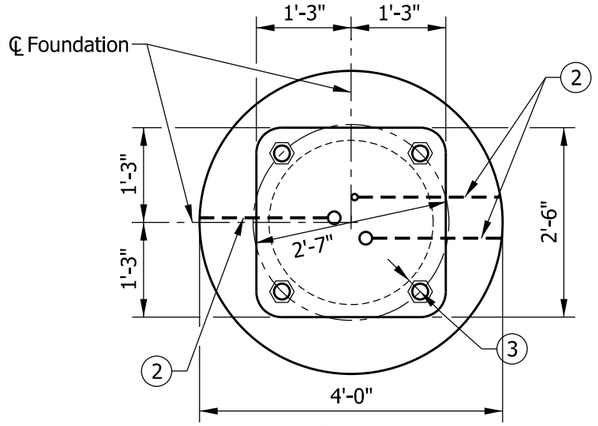

PLAN

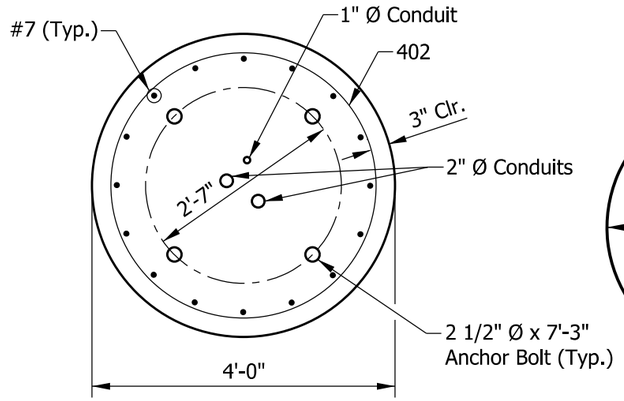

SECTION G-G

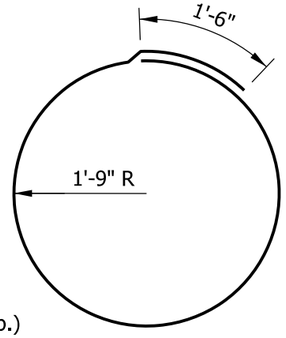

402 X 12'-6"

NOTES:

1. The Type E foundations are to be used for 35' dual arm structures and cohesive soil with minimum Q_u = 750 lb/ft or sand with minimum friction angle 30°.
2. A tooled line or other permanent marking shall be provided on the top of the foundation to indicate the direction of the conduits' exit ends.
3. 2 1/2" minimum clearance to weld at pole. Anchor bolt circle shall allow clearance for the anchor bolt washers. Cutting or trimming of the washers will not be allowed.
4. The foundation shall be poured monolithically and shall have no construction joint.
5. See Standard Drawing E 805-SDAC-04 for base plate details.

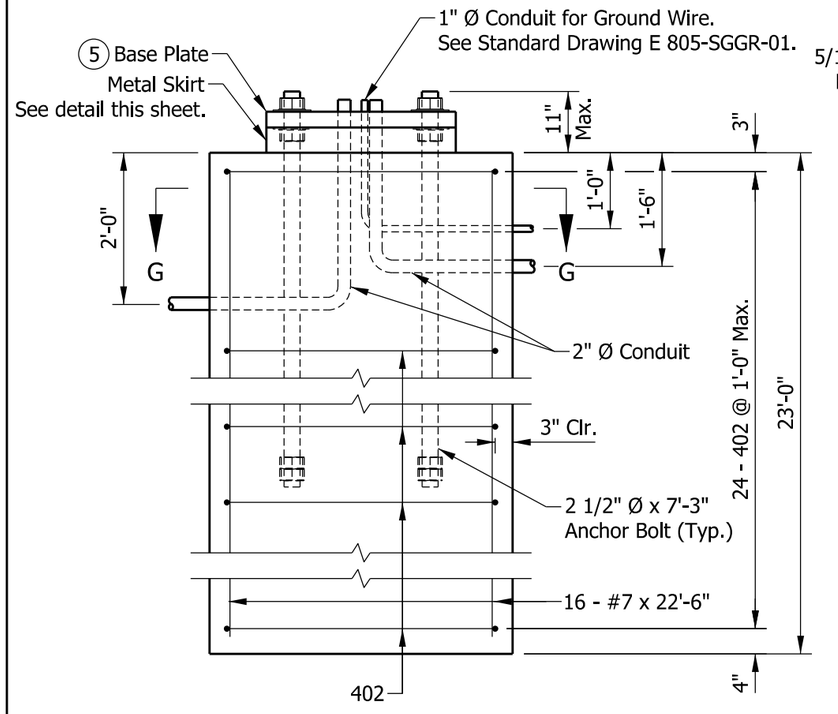

DRILLED SHAFT
ELEVATION

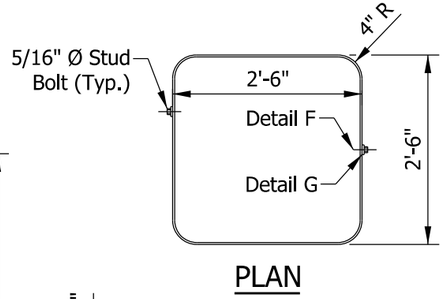

PLAN

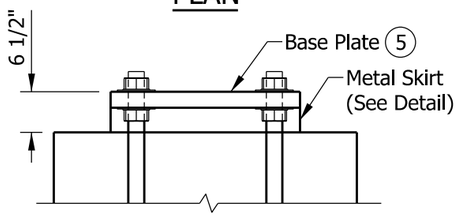

ELEVATION

METAL SKIRT DETAIL

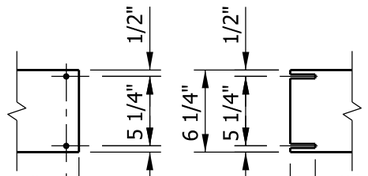

DETAIL F DETAIL G

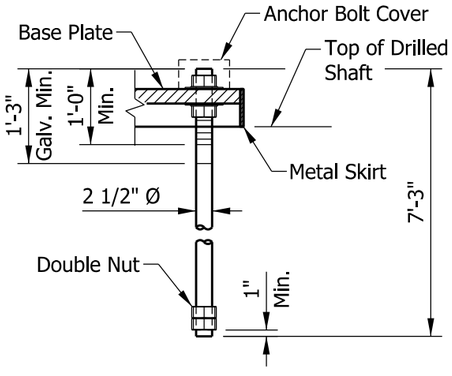

ANCHOR BOLT DETAIL

ALTERNATE ANCHOR BOLT HOOK

BILL OF MATERIALS			
REINFORCING BARS			
MARK OR SIZE	NO. OF BARS	LENGTH	WEIGHT
#7	16	22'-6"	
Total #7			736 LBS
402	24	12'-6"	
Total #4			201 LBS
Total Reinforcing Bars			937 LBS
CONCRETE			
Concrete, Class A			10.7 CYS

INDIANA DEPARTMENT OF TRANSPORTATION

SIGNAL DUAL ARM CANTILEVERS FOUNDATION, DRILLED SHAFT TYPE F FOR DUAL ARMS GREATER THAN 35' TO 45'

SEPTEMBER 2013

STANDARD DRAWING NO. E 805-SDAC-09

ALFREDO B. HANZA
REGISTERED
No. 60020657
STATE OF INDIANA
PROFESSIONAL ENGINEER

/s/ Alfredo B. Hanza 02/05/13
DESIGN STANDARDS ENGINEER DATE

/s/ Mark A. Miller 03/27/13
CHIEF ENGINEER DATE

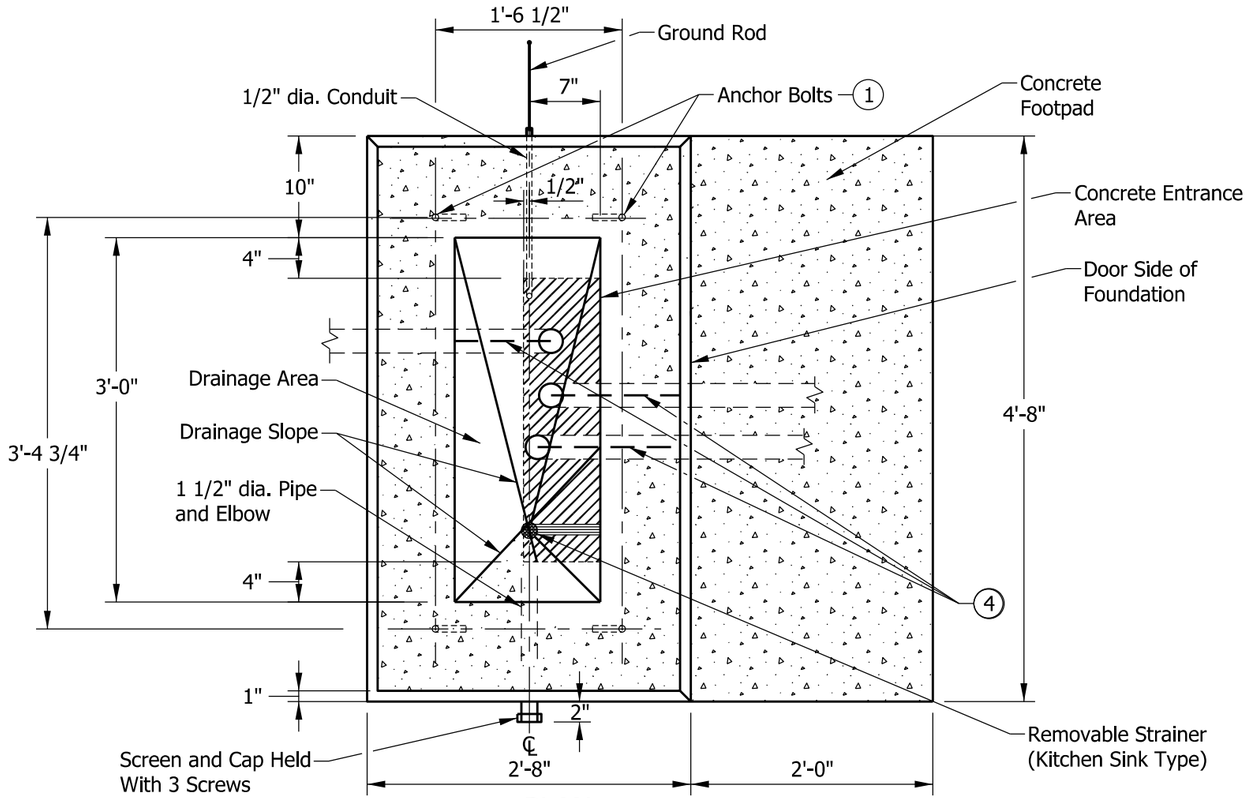

PLAN

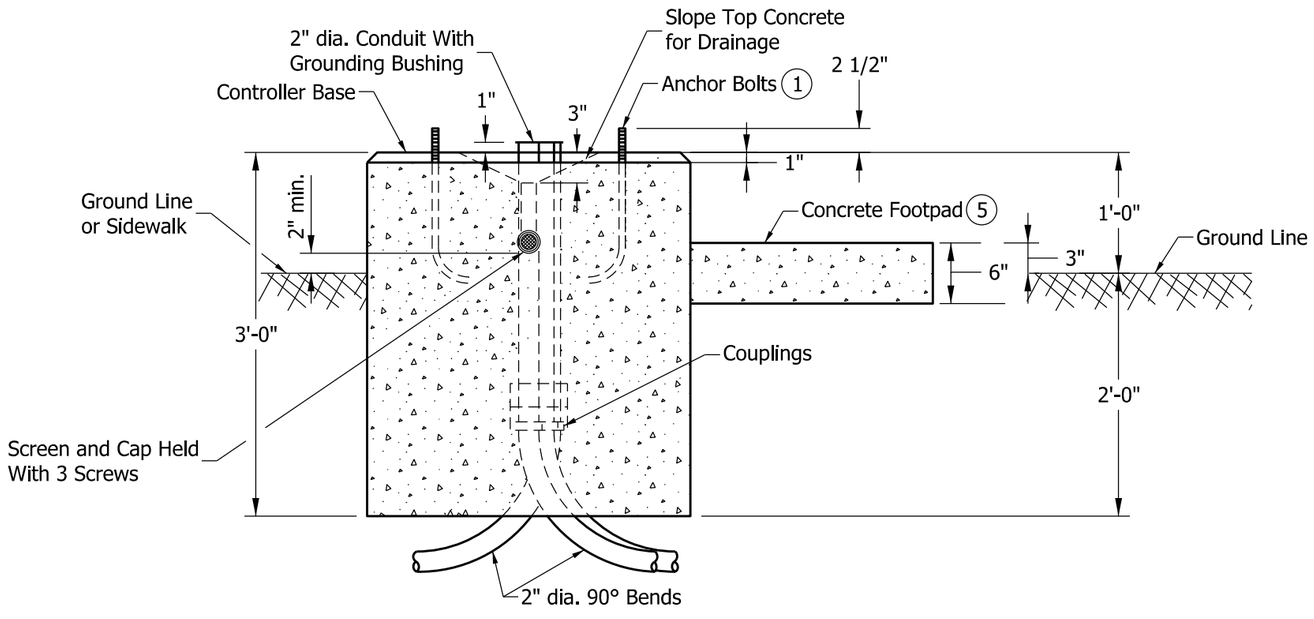

ELEVATION

NOTES:

(1) See Standard Drawing E 805-SGPB-01 for anchor bolt details.

2. Install minimum 3 - 2" dia. conduits for each foundation.

3. Conduits not used shall be capped below grade. More inlets shall be installed as required on plans.

(4) Make a permanent line on top of the concrete foundation indicating the direction of the 2" conduits' exit.

(5) Concrete footpad shall be constructed of the same class concrete as the foundation.

INDIANA DEPARTMENT OF TRANSPORTATION

SIGNAL CONTROLLER CABINET FOUNDATION TYPE P-1

SEPTEMBER 2013

STANDARD DRAWING NO. E 805-SGCF-01

ALFREDO B. HANZA
REGISTERED
No. 60020657
STATE OF INDIANA
PROFESSIONAL ENGINEER

/s/ Alfredo B. Hanza 02/22/13
DESIGN STANDARDS ENGINEER DATE

/s/ Mark A. Miller 03/27/13
CHIEF ENGINEER DATE

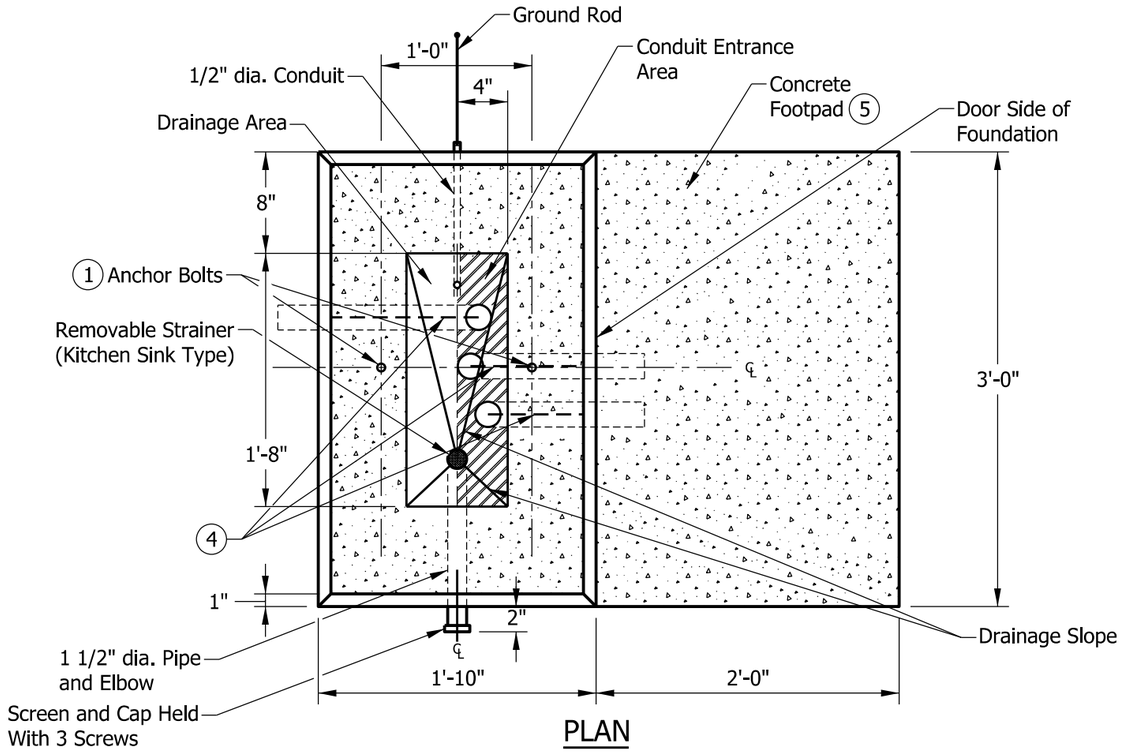

PLAN

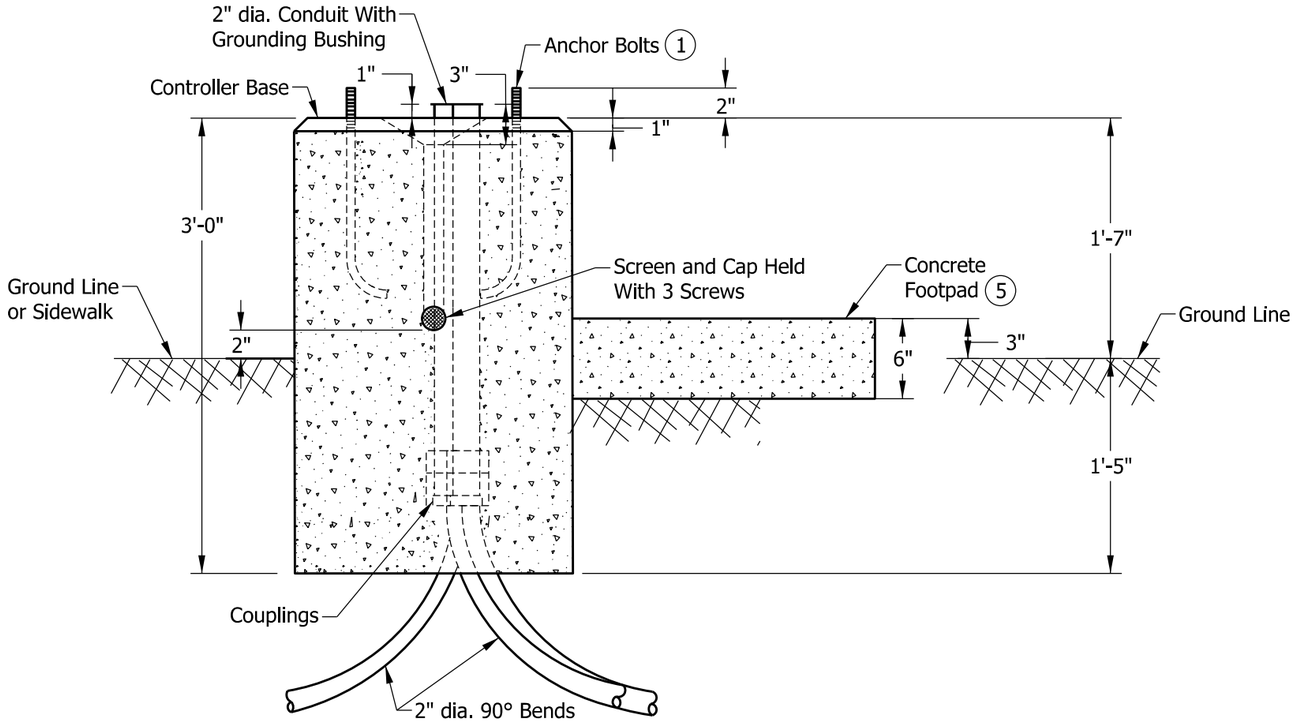

ELEVATION

NOTES:

(1) See Standard Drawing E 805-SGPB-01 for anchor bolt details.

2. Install minimum 3 - 2" dia. conduits for each foundation.

3. Conduits not used shall be capped below grade. More inlets shall be installed as required on plans.

(4) Make a permanent line on top of the concrete foundation indicating the direction of the 2" conduits' exit.

(5) Concrete footpad shall be constructed of the same class concrete as the foundation.

INDIANA DEPARTMENT OF TRANSPORTATION

SIGNAL CONTROLLER CABINET FOUNDATION TYPE M

SEPTEMBER 2013

STANDARD DRAWING NO. E 805-SGCF-02

ALFREDO B. HANZA REGISTERED No. 60020657 STATE OF INDIANA PROFESSIONAL ENGINEER

/s/ Alfredo B. Hanza	*02/22/13*
DESIGN STANDARDS ENGINEER	DATE
/s/ Mark A. Miller	*03/27/13*
CHIEF ENGINEER	DATE

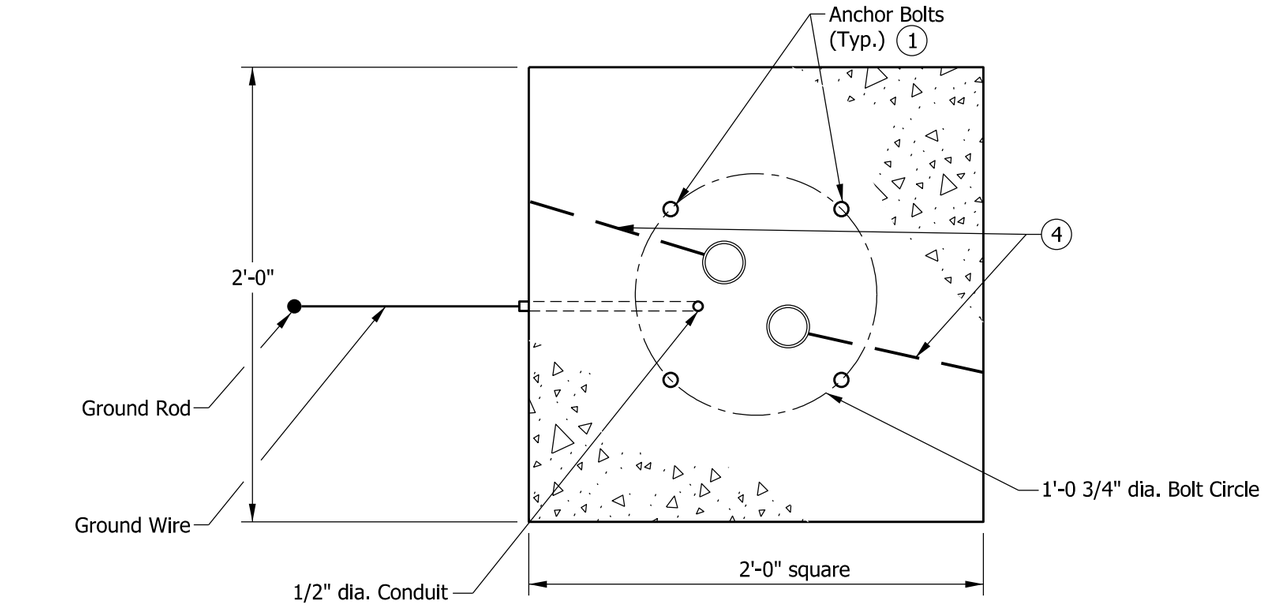

PLAN

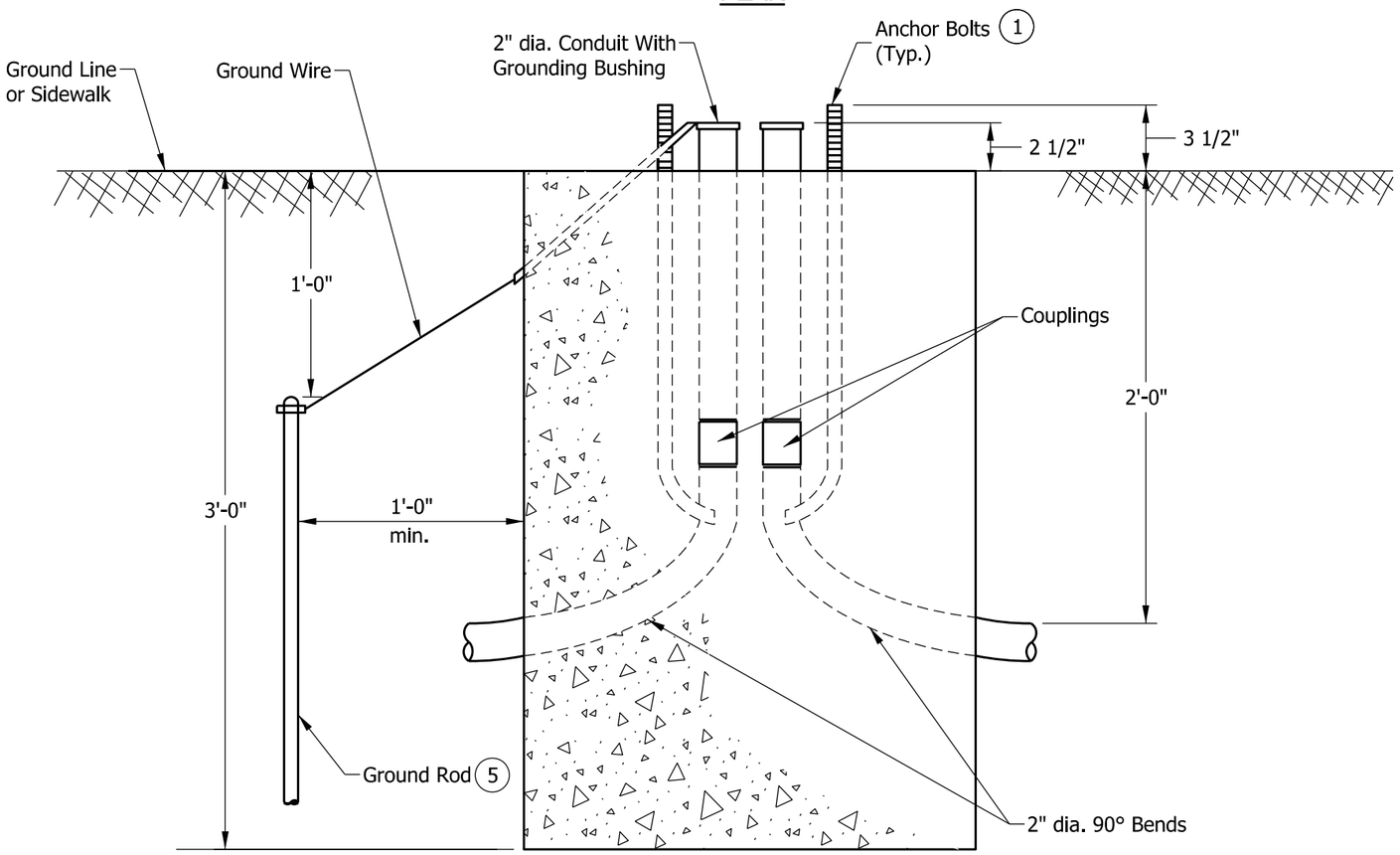

ELEVATION

GENERAL NOTES:

1. See Standard Drawing E 805-SGPB-01 for anchor bolt details.
2. A minimum of two 2-in. dia. conduit inlets shall be installed for each foundation.
3. Conduit inlets not used shall be capped below grade. More inlets shall be installed as required on plans.
4. Make a permanent line on top of the concrete foundation indicating the direction of the 2-in. conduits' exit.
5. The ground rod has length 8 ft.
6. The signal pole foundation, 24 in. x 24 in. x 36 in. is also known as a type A foundation.

INDIANA DEPARTMENT OF TRANSPORTATION

SIGNAL POLE FOUNDATION,
24 IN. X 24 IN. X 36 IN.

SEPTEMBER 2013

STANDARD DRAWING NO. E 805-SGCF-03

ALFREDO B. HANZA
REGISTERED
No. 60020657
STATE OF INDIANA
PROFESSIONAL ENGINEER

/s/ Alfredo B. Hanza 02/27/13
DESIGN STANDARDS ENGINEER DATE

/s/ Mark A. Miller 03/27/13
CHIEF ENGINEER DATE

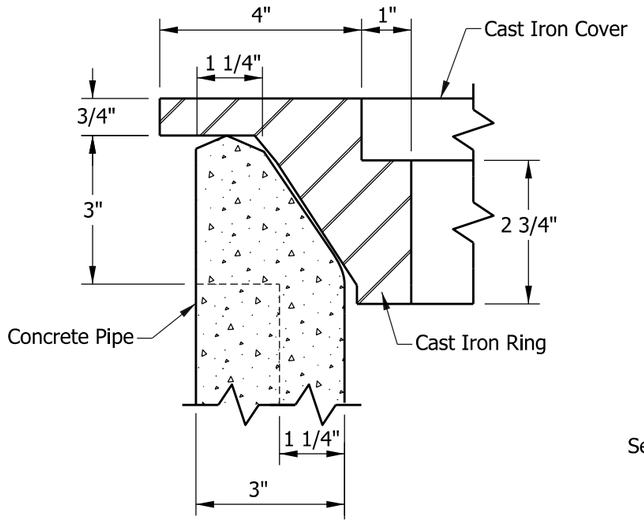

DETAIL A

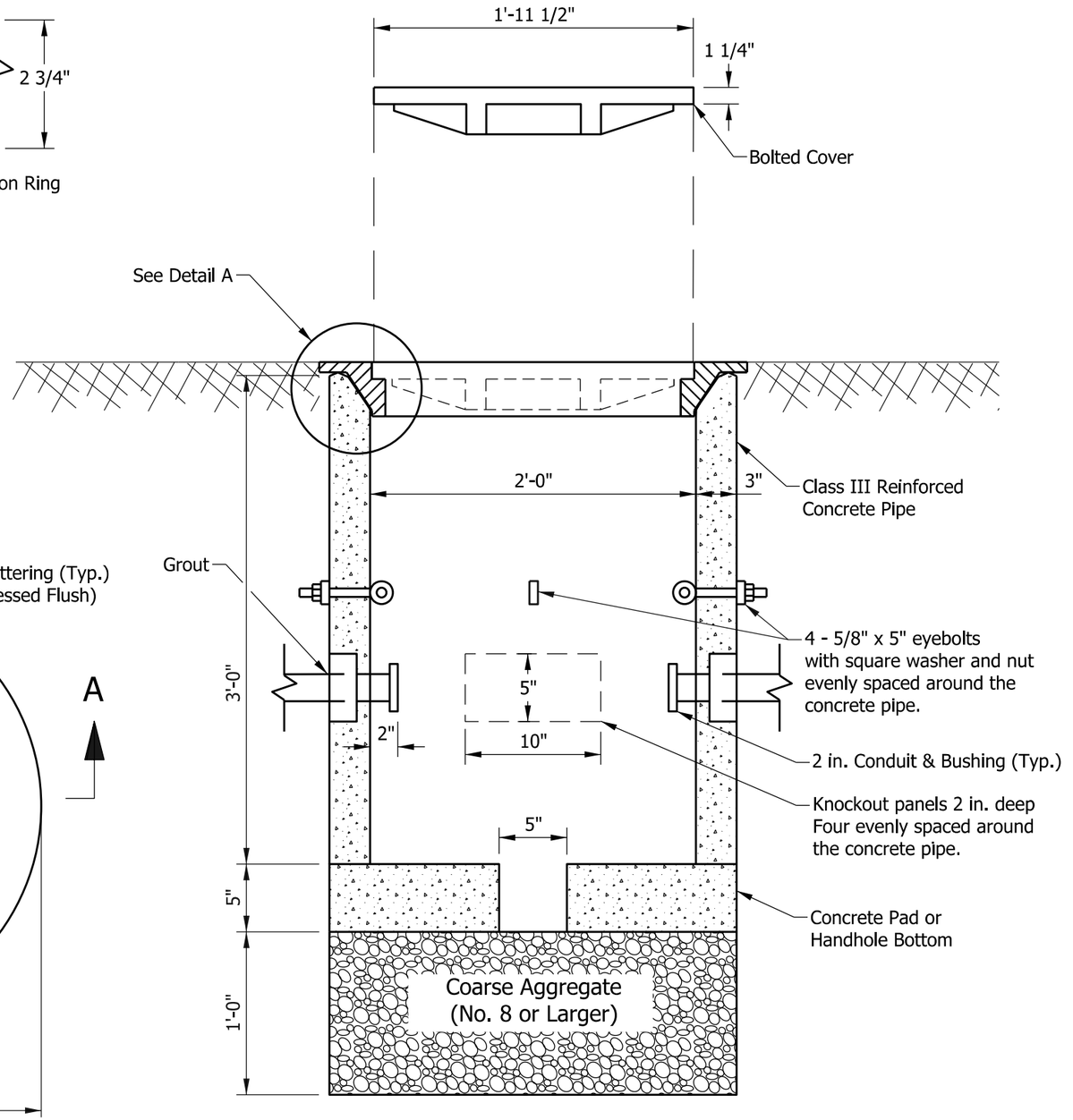

SECTION A-A

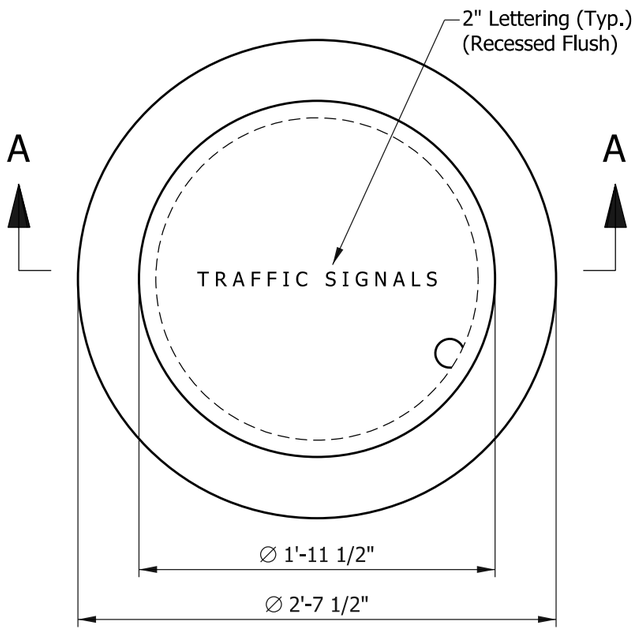

PLAN

NOTES:

1. Approximate weight for cast iron ring and cover shall be 320 lb.
2. The ring and cover shall be secure. Attachment hardware shall be countersunk.
3. See Standard Drawing E 805-SGCF-06 for Signal Handhole, Type II, Polymer Concrete and cover.

INDIANA DEPARTMENT OF TRANSPORTATION

SIGNAL HANDHOLE, TYPE I
CONCRETE

SEPTEMBER 2013

STANDARD DRAWING NO. E 805-SGCF-04

ALFREDO B. HANZA
REGISTERED
No. 60020657
STATE OF INDIANA
PROFESSIONAL ENGINEER

/s/ Alfredo B. Hanza 02/22/13
DESIGN STANDARDS ENGINEER DATE

/s/ Mark A. Miller 03/27/13
CHIEF ENGINEER DATE

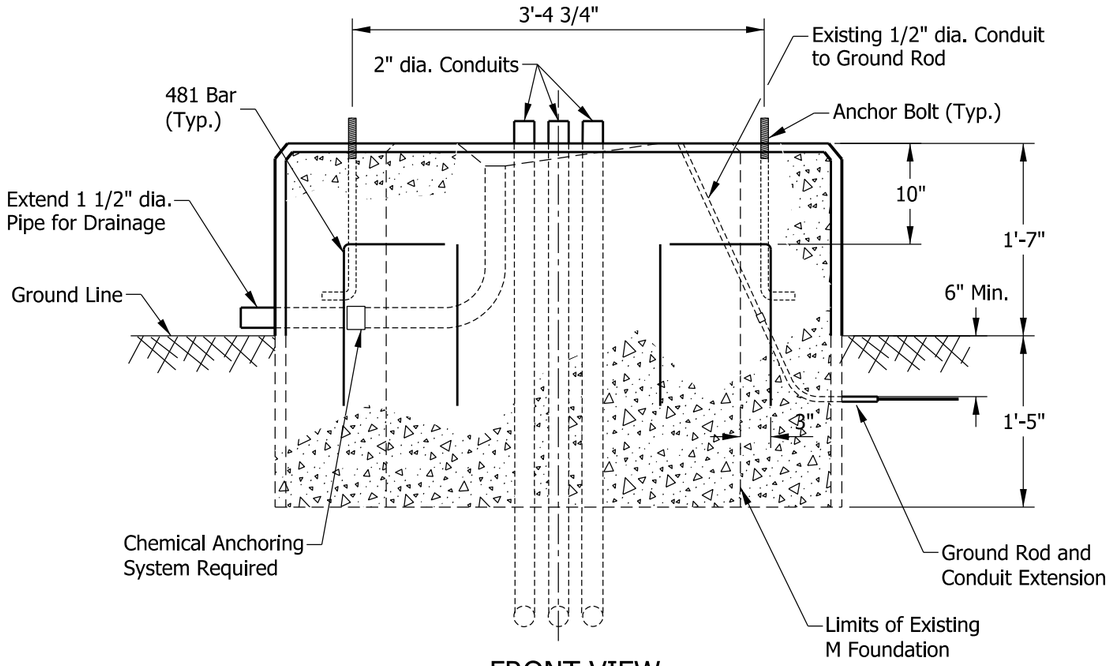

FRONT VIEW

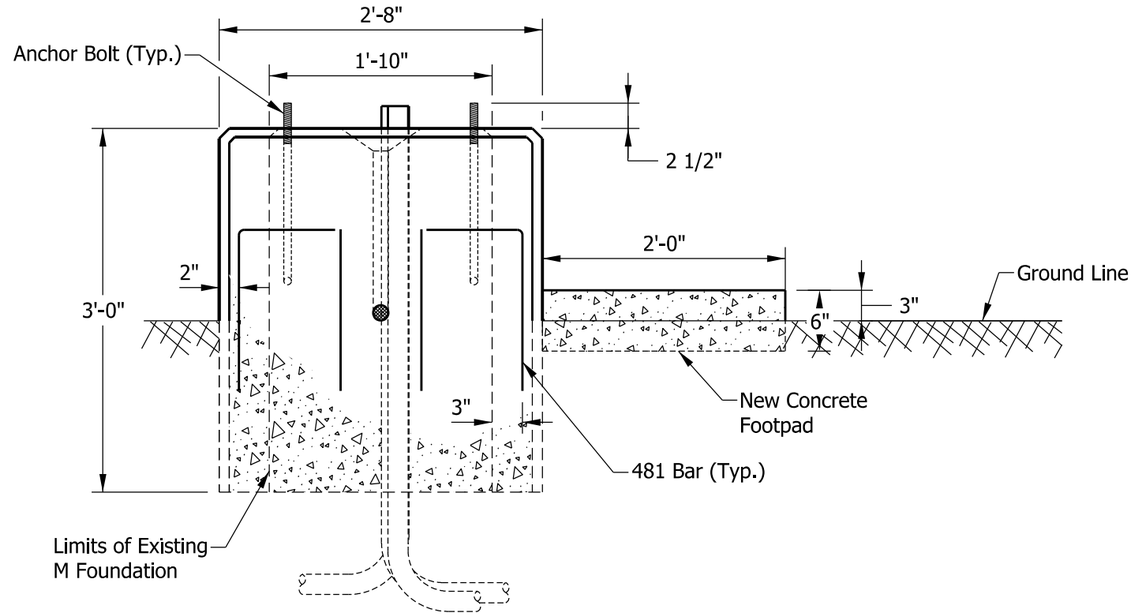

SIDE VIEW A-A

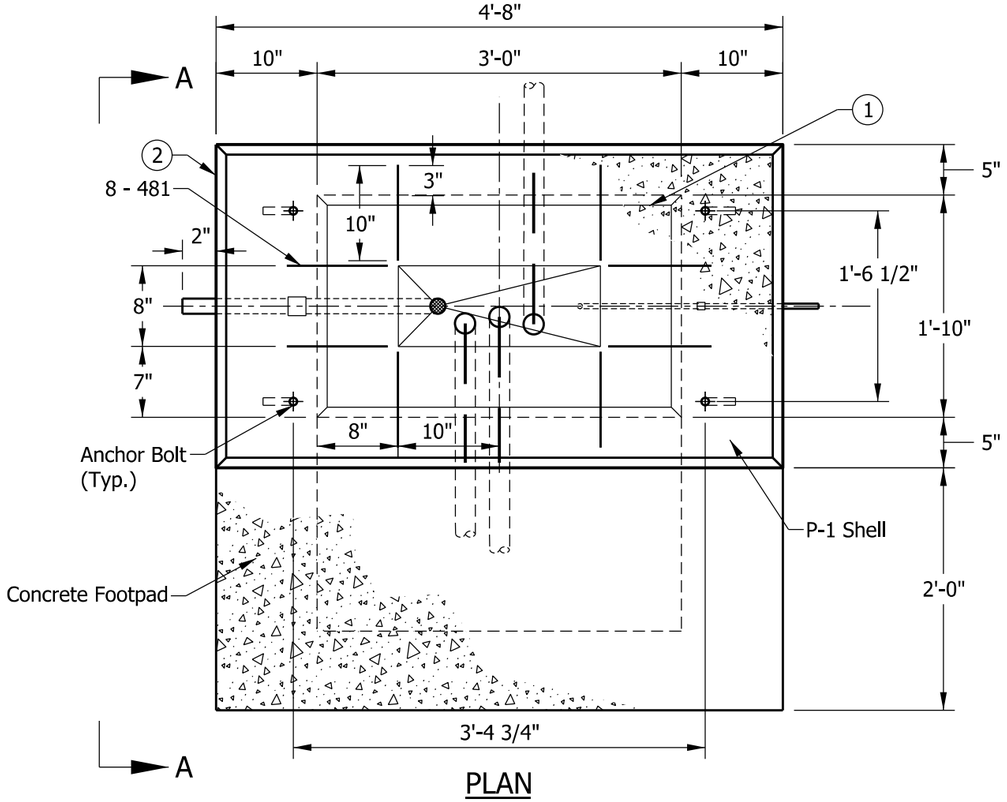

PLAN

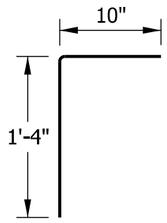

481 x 2'-2"

NOTES:

(1) See Standard Drawing E 805-SGCF-02 for Type M foundation details.

(2) See Standard Drawing E 805-SGCF-01 for Type P-1 foundation details.

3. Existing anchor bolts shall be cut at or below top of existing foundation.

4. See Standard Drawing E 805-SGCF-03 for General Notes.

INDIANA DEPARTMENT OF TRANSPORTATION

EXISTING M FOUNDATION MODIFIED TO P-1 FOUNDATION

SEPTEMBER 2013

STANDARD DRAWING NO. E 805-SGCF-05

ALFREDO B. HANZA REGISTERED No. 60020657 STATE OF INDIANA PROFESSIONAL ENGINEER

/s/ Alfredo B. Hanza 02/28/13
DESIGN STANDARDS ENGINEER DATE

/s/ Mark A. Miller 03/27/13
CHIEF ENGINEER DATE

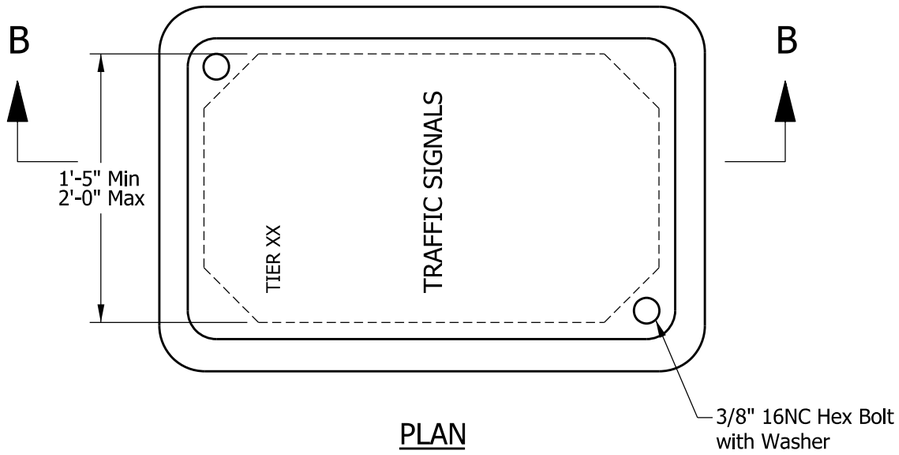

PLAN

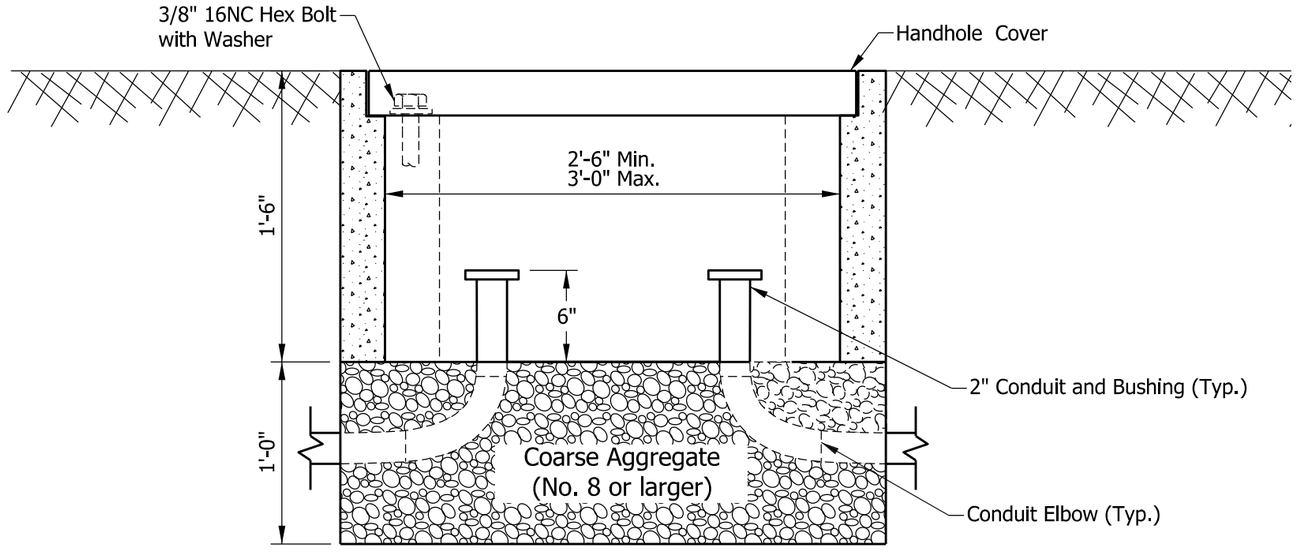

SECTION B-B

NOTE:

1. See Standard Drawing E 805-SGCF-04 for Signal Handhole, Type I, Concrete and cover.

INDIANA DEPARTMENT OF TRANSPORTATION

SIGNAL HANDHOLE, TYPE II
POLYMER CONCRETE

SEPTEMBER 2013

STANDARD DRAWING NO. E 805-SGCF-06

ALFREDO B. HANZA
REGISTERED
No.
60020657
STATE OF
INDIANA
PROFESSIONAL ENGINEER

/s/ Alfredo B. Hanza 02/22/13
DESIGN STANDARDS ENGINEER DATE

/s/ Mark A. Miller 03/27/13
CHIEF ENGINEER DATE

INDEX	
SHEET NO.	SUBJECT
1	Signal Index and General Notes
2	Signal Service & Controller Mounted on Wood Pole
3	Signal Service & Controller Mounted on Steel Pole
4	Signal Service On Wood Pole
5	Signal Indication Mounted on Steel Pole
6	Signal Indication Mounted on Wood Pole
7	Pedestal Mounted Signal Indications
8	Controller Cabinet Type G On Pedestal

INDIANA DEPARTMENT OF TRANSPORTATION

SIGNAL INDEX AND
GENERAL NOTES

SEPTEMBER 2017

STANDARD DRAWING NO. E 805-SGCO-01

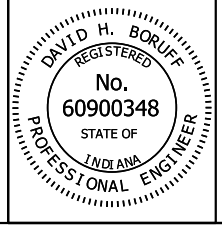

/s/ David H. Boruff 10/26/16
DESIGN STANDARDS ENGINEER DATE

/s/ Mark A. Miller 11/02/16
CHIEF ENGINEER DATE

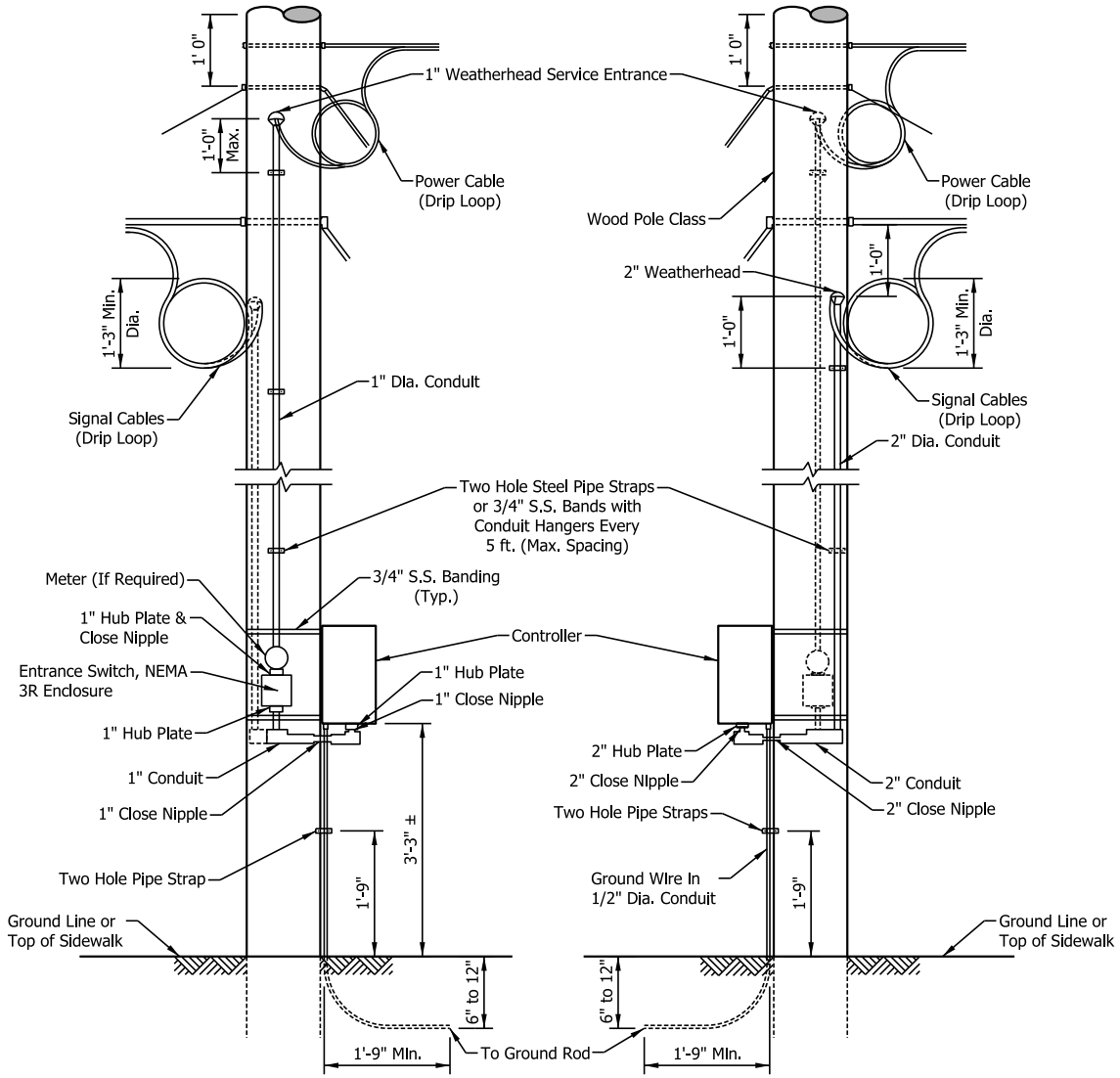

INDIANA DEPARTMENT OF TRANSPORTATION

SIGNAL SERVICE & CONTROLLER MOUNTED ON WOOD POLE

SEPTEMBER 2017

STANDARD DRAWING NO. E 805-SGCO-02

DAVID H. BORUFF REGISTERED No. 60900348 STATE OF INDIANA PROFESSIONAL ENGINEER

/s/ David H. Boruff 10/26/16
DESIGN STANDARDS ENGINEER DATE

/s/ Mark A. Miller 11/02/16
CHIEF ENGINEER DATE

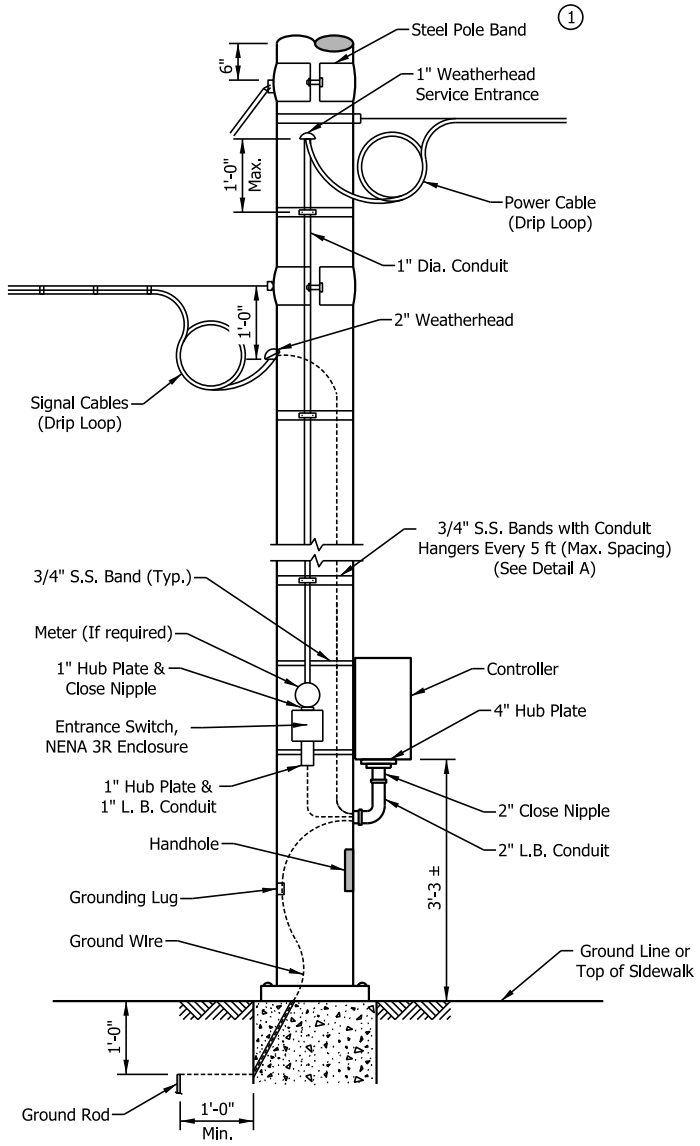

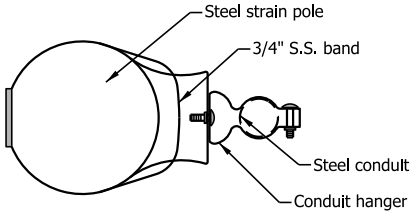

DETAIL A

NOTES:

① See Standard Drawing E 805-SGSP-03 for details of bands.

INDIANA DEPARTMENT OF TRANSPORTATION

SIGNAL SERVICE & CONTROLLER
MOUNTED ON STEEL POLE

SEPTEMBER 2017

STANDARD DRAWING NO. E 805-SGCO-03

DAVID H. BORUFF REGISTERED No. 60900348 STATE OF INDIANA PROFESSIONAL ENGINEER

/s/ David H. Boruff 10/26/16
DESIGN STANDARDS ENGINEER DATE

/s/ Mark A. Miller 11/02/16
CHIEF ENGINEER DATE

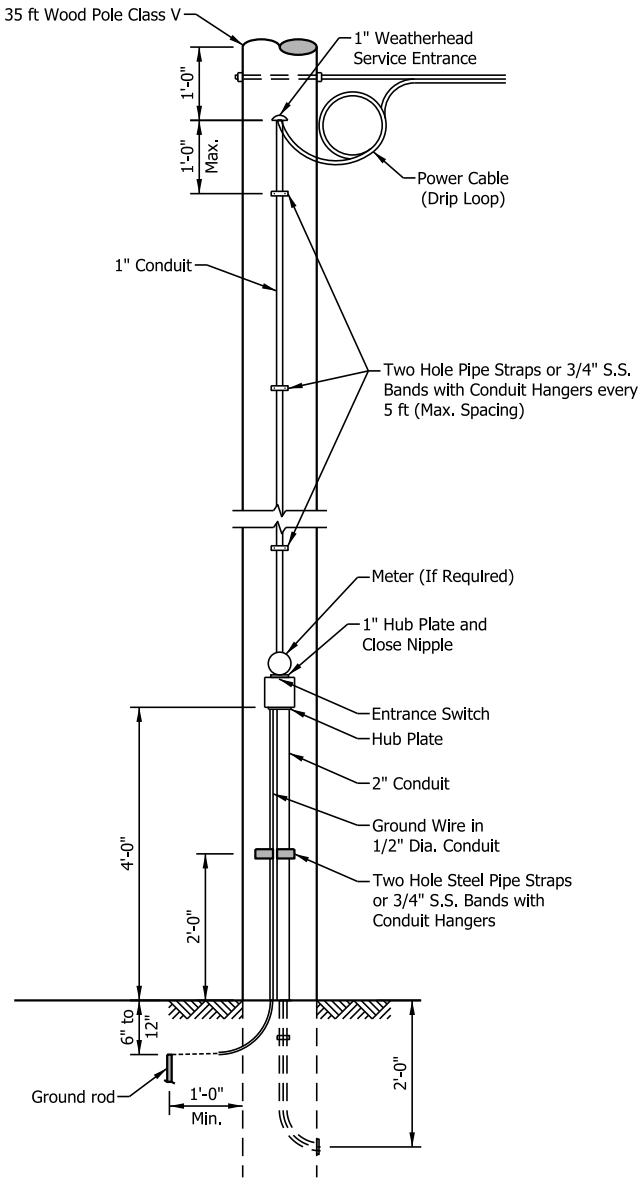

INDIANA DEPARTMENT OF TRANSPORTATION

SIGNAL SERVICE
ON WOOD POLE

SEPTEMBER 2017

STANDARD DRAWING NO. E 805-SGCO-04

DAVID H. BORUFF
REGISTERED
No.
60900348
STATE OF
INDIANA
PROFESSIONAL ENGINEER

/s/ David H. Boruff 10/26/16
DESIGN STANDARDS ENGINEER DATE

/s/ Mark A. Miller 11/02/16
CHIEF ENGINEER DATE

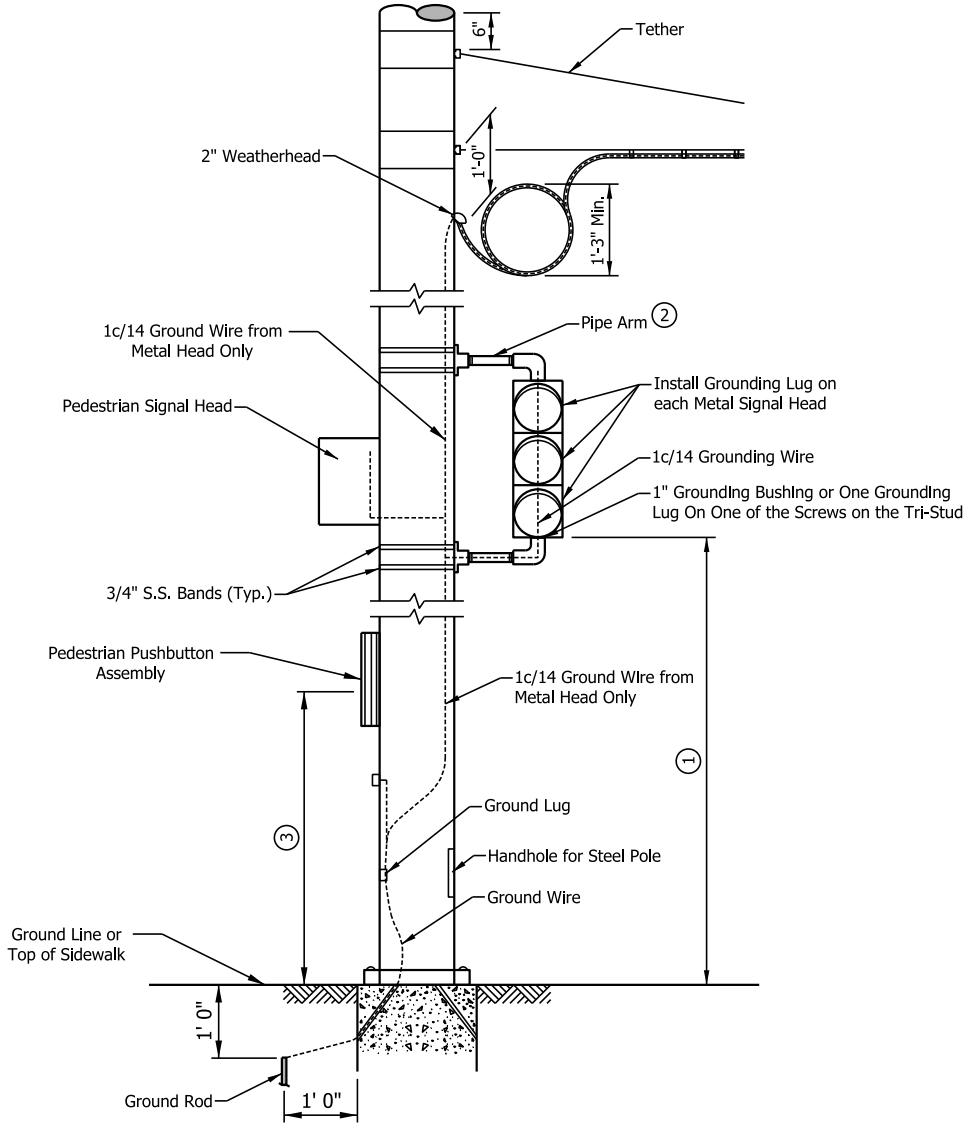

NOTES:

(1) This distance shall be 10'-0" to 15'-0" above centerline of pavement for vehicular signals and from 7'-0" to 10'-0" above top of sidewalk for pedestrian signals.

(2) Each pedestrian signal and each vehicular signal requires 2 pole plates and 2 pipe arms.

(3) See Standard Drawing E 805-PPBA-01 for pedestrian pushbutton assembly mounting height and unobstructed side reach.

INDIANA DEPARTMENT OF TRANSPORTATION

SIGNAL INDICATION MOUNTED
ON STEEL POLE

SEPTEMBER 2017

STANDARD DRAWING NO. E 805-SGCO-05

DAVID H. BORUFF
REGISTERED
No.
60900348
STATE OF
INDIANA
PROFESSIONAL ENGINEER

/s/ David H. Boruff 10/26/16
DESIGN STANDARDS ENGINEER DATE

/s/ Mark A. Miller 11/02/16
CHIEF ENGINEER DATE

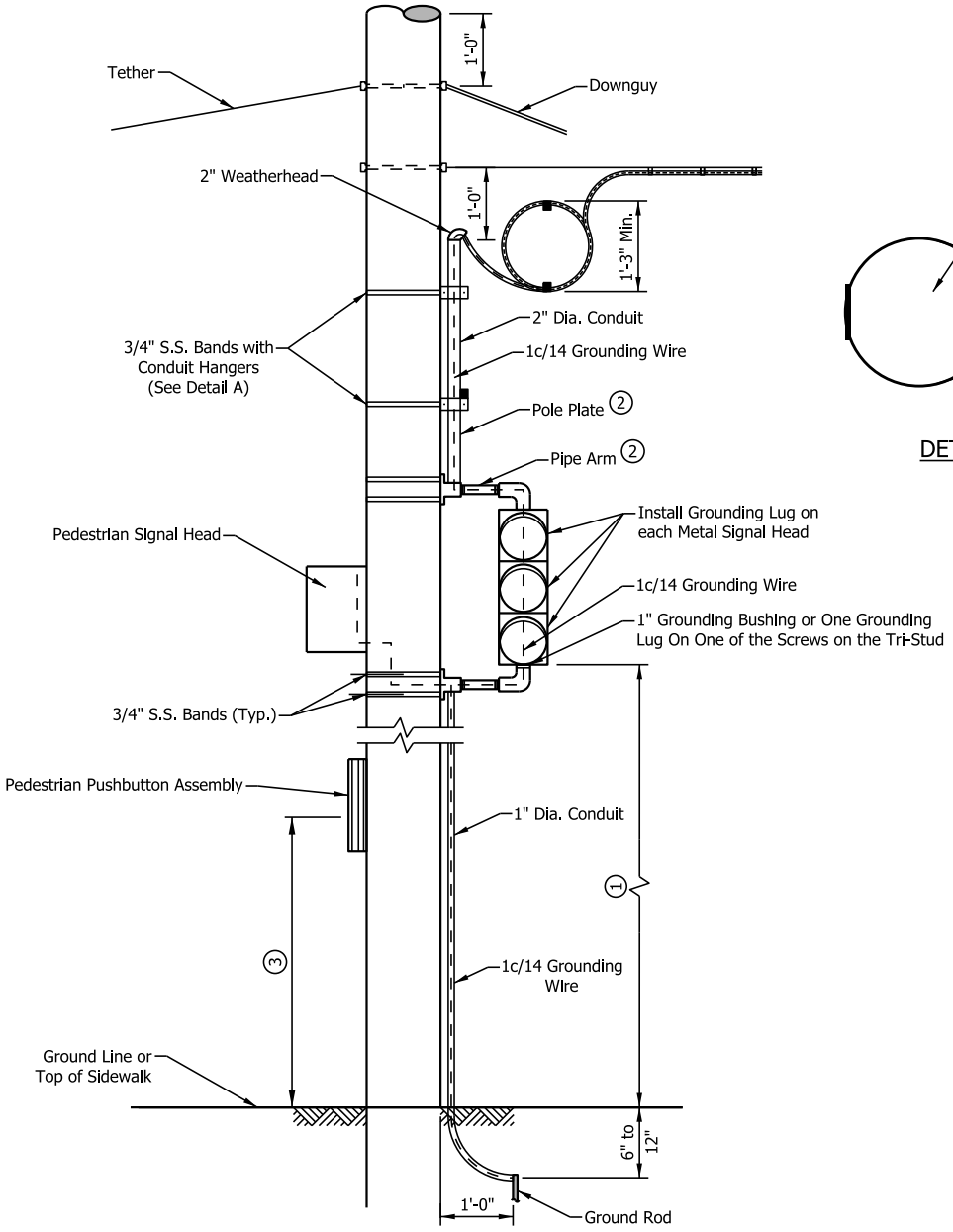

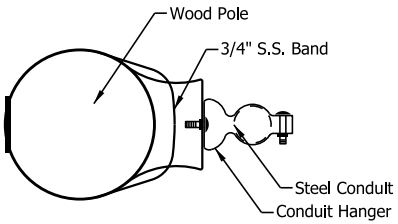

DETAIL A

NOTES:

(1) This distance shall be 10'-0" to 15'-0" above centerline of pavement for vehicular signals and from 7'-0" to 10'-0" above top of sidewalk for pedestrian signals.

(2) Each pedestrian signal and each vehicular signal requires 2 pole plates and 2 pipe arms.

(3) See Standard Drawing E 805-PPBA-01 for pedestrian pushbutton assembly mounting height and unobstructed side reach.

INDIANA DEPARTMENT OF TRANSPORTATION

SIGNAL INDCATION MOUNTED
ON WOOD POLES

SEPTEMBER 2017

STANDARD DRAWING NO. E 805-SGCO-06

DAVID H. BORUFF
REGISTERED
No.
60900348
STATE OF
INDIANA
PROFESSIONAL ENGINEER

/s/ David H. Boruff 10/26/16
DESIGN STANDARDS ENGINEER DATE

/s/ Mark A. Miller 11/02/16
CHIEF ENGINEER DATE

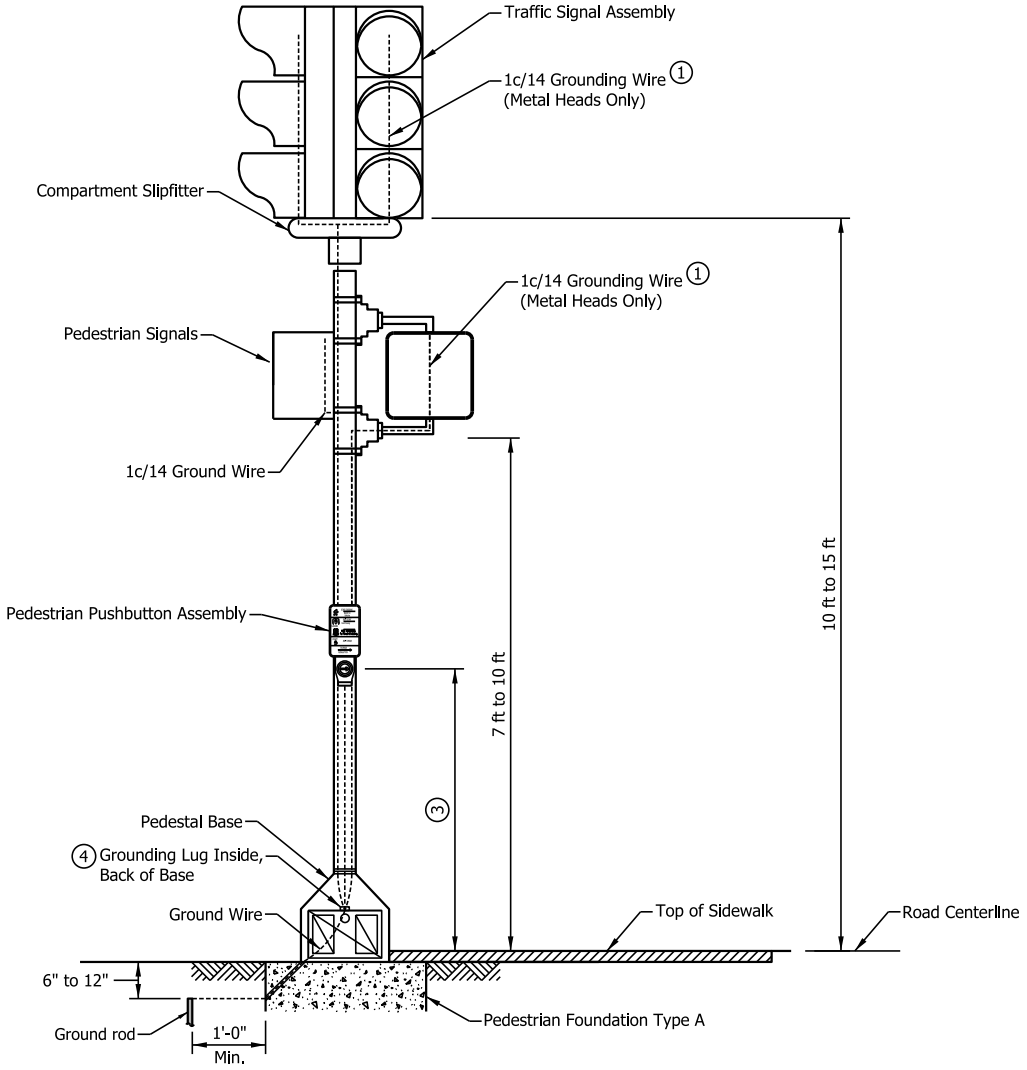

NOTES:

(1) On metal signal heads grounding wire shall connect each signal head and the bottom grounding bushing of the assembly to the grounding lug.

2. Single conductor (hookup) shall be used from slipfitter terminal block to signal indications.

(3) See Standard Drawing E 805-PPBA-01 for pedestrian pushbutton assembly mounting height and unobstructed side reach.

(4) See Standard Drawing E 805-SGGR-03 for grounding lug details.

INDIANA DEPARTMENT OF TRANSPORTATION

PEDESTAL MOUNTED
SIGNAL INDICATIONS

SEPTEMBER 2017

STANDARD DRAWING NO. E 805-SGCO-07

DAVID H. BORUFF REGISTERED No. 60900348 STATE OF INDIANA PROFESSIONAL ENGINEER

/s/ David H. Boruff 10/26/16
DESIGN STANDARDS ENGINEER DATE

/s/ Mark A. Miller 11/02/16
CHIEF ENGINEER DATE

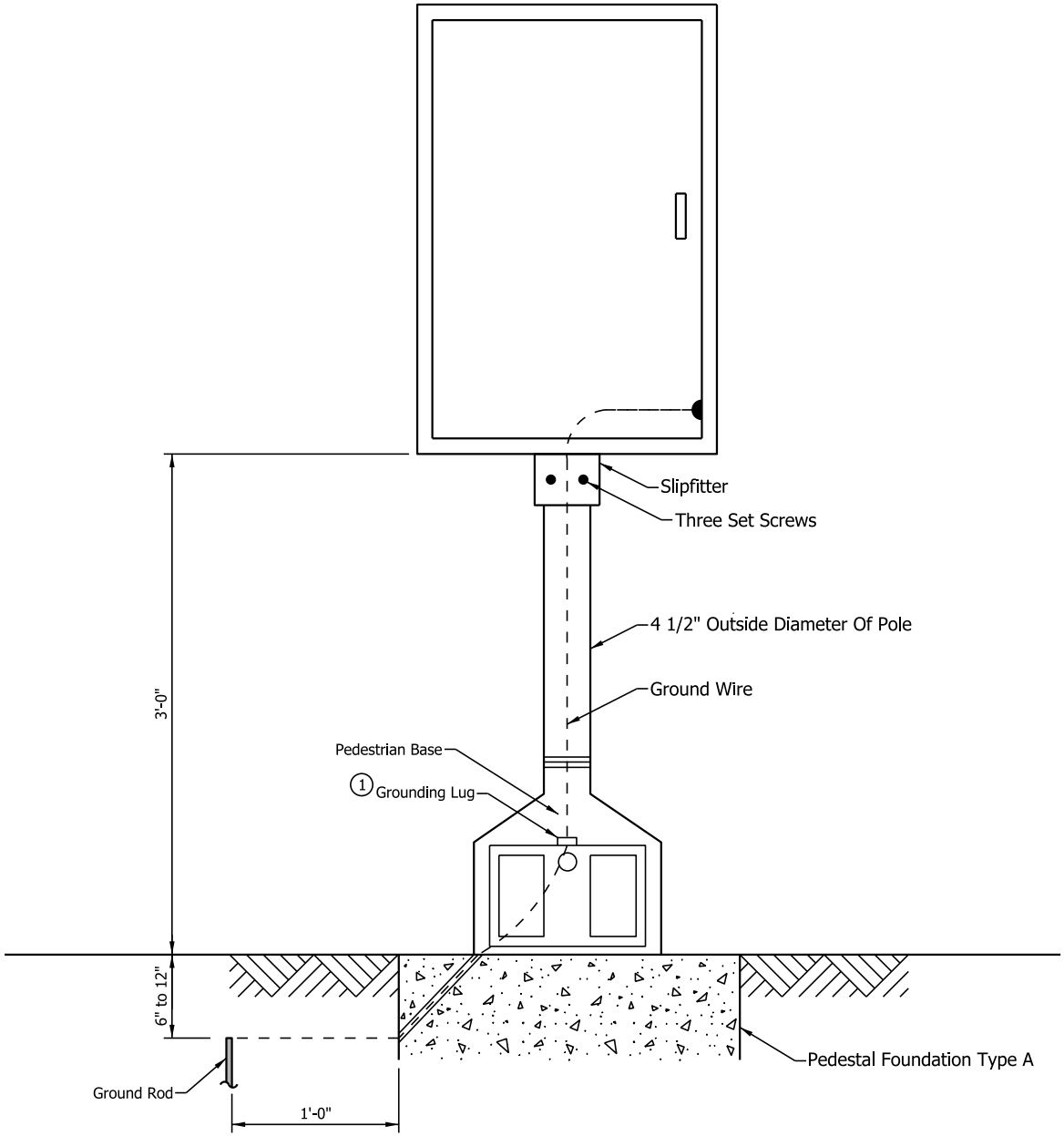

NOTES:

1. See Standard Drawing E 805-SGGR-03 for grounding lug details.

INDIANA DEPARTMENT OF TRANSPORTATION

CONTROLLER CABINET
TYPE G ON PEDESTAL

SEPTEMBER 2017

STANDARD DRAWING NO. E 805-SGCO-08

DAVID H. BORUFF REGISTERED No. 60900348 STATE OF INDIANA PROFESSIONAL ENGINEER

/s/ David H. Boruff 10/26/16
DESIGN STANDARDS ENGINEER DATE

/s/ Mark A. Miller 11/02/16
CHIEF ENGINEER DATE

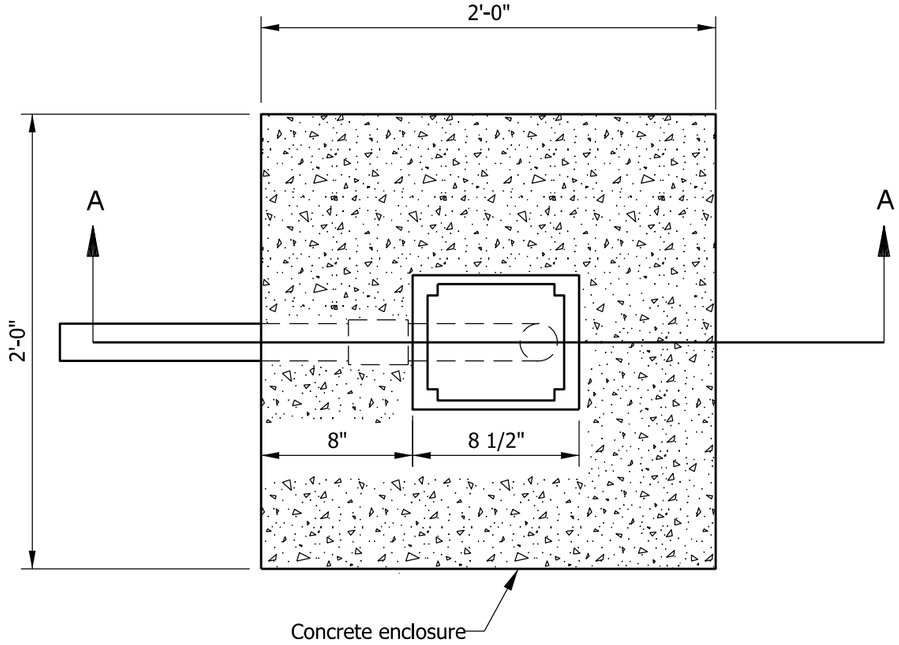

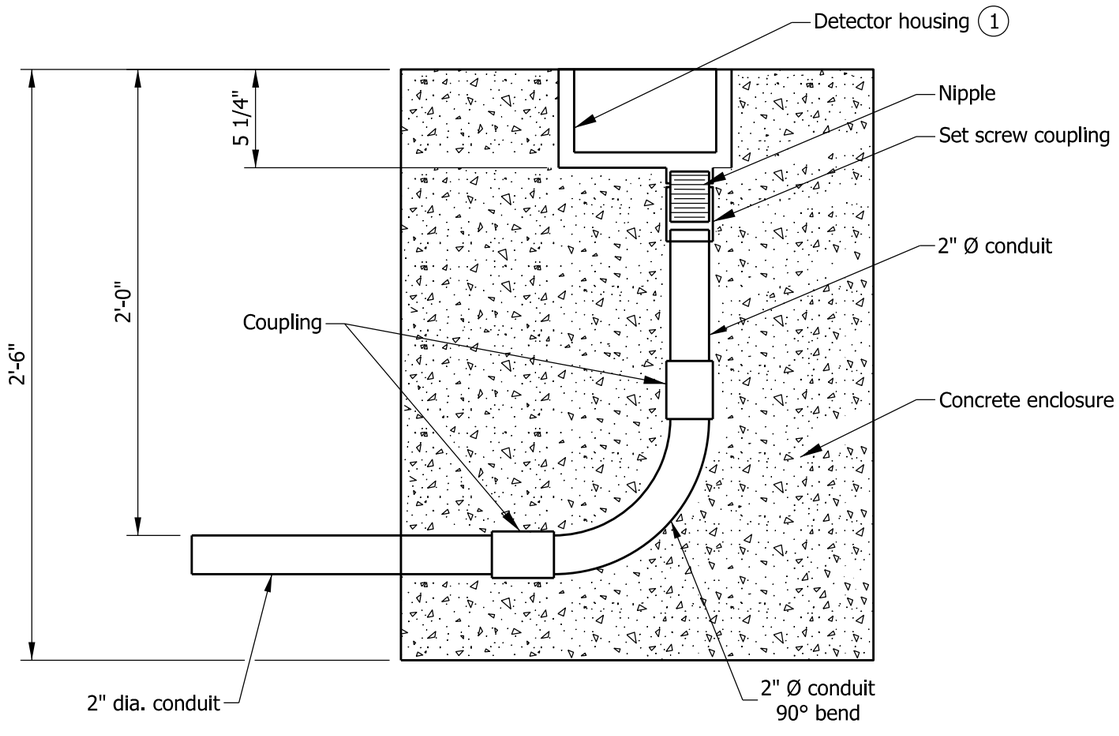

SECTION A-A

NOTE

(1) See Standard Drawing E 805-SGDH-02 for detector housing detail.

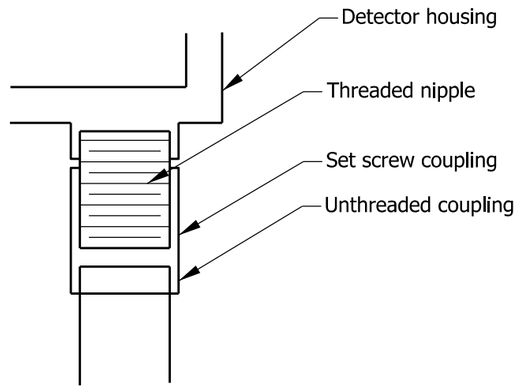

DETECTOR HOUSING
COUPLING DETAIL

INDIANA DEPARTMENT OF TRANSPORTATION

INSTALLATION DETAIL
DETECTOR HOUSING

SEPTEMBER 2012

STANDARD DRAWING NO. E 805-SGDH-01

RICHARD L. VanCLEAVE
REGISTERED
No. 9750
STATE OF INDIANA
PROFESSIONAL ENGINEER

/s/ Richard L. VanCleave 09/04/12
SUPERVISOR, ROADWAY STANDARDS DATE

/s/ Mark A. Miller 09/04/12
CHIEF ENGINEER DATE

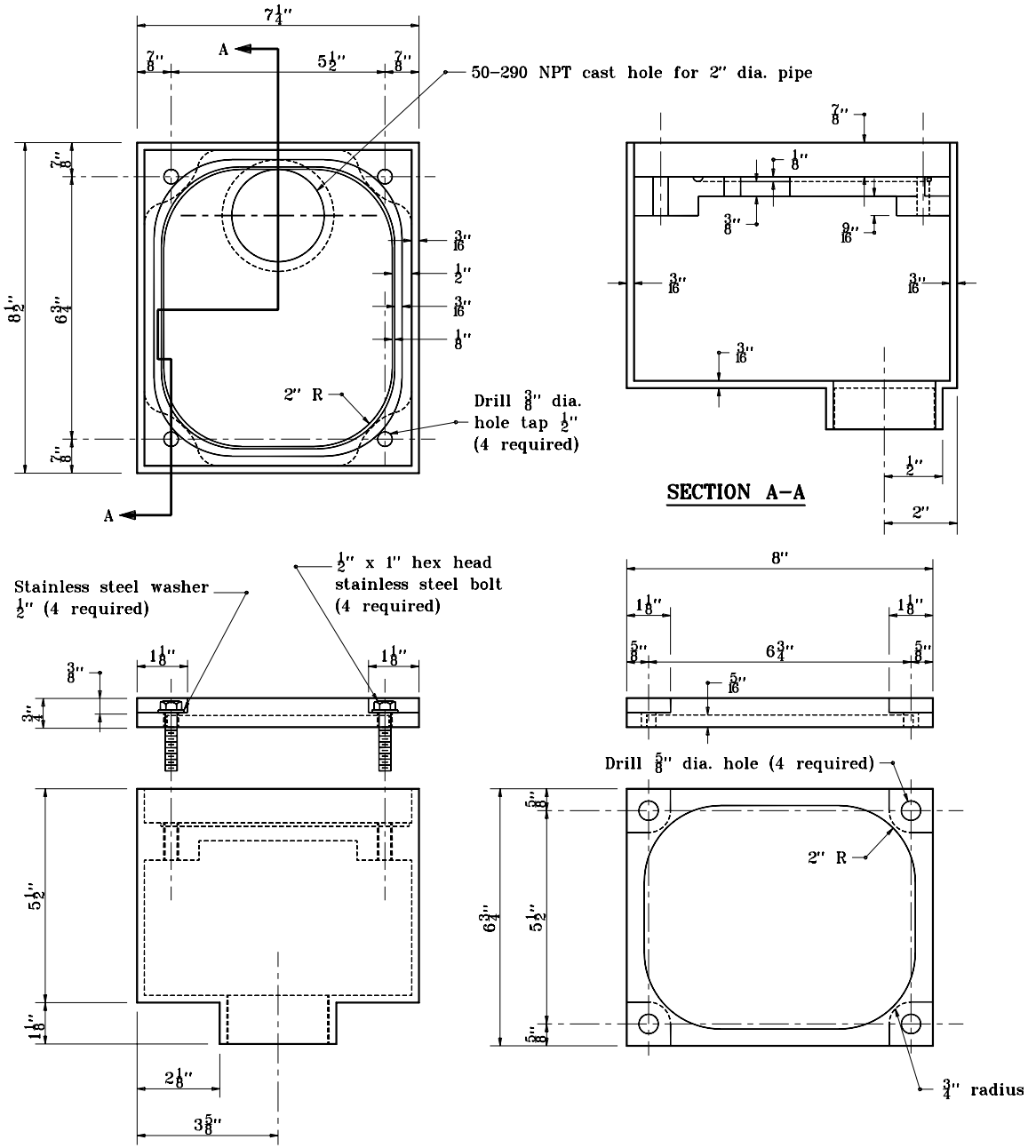

INDIANA DEPARTMENT OF TRANSPORTATION

DETAIL OF DETECTOR HOUSING

MAY 1998

STANDARD DRAWING NO. **E 805-SGDH-02**

ANTHONY L. UREMOVICH REGISTERED No. 18095 STATE OF INDIANA PROFESSIONAL ENGINEER

DESIGN STANDARDS ENGINEER

DETAILS PLACED IN THIS FORMAT	11-15-99
/s/ Anthony L. Uremovich	11-15-99
DESIGN STANDARDS ENGINEER	DATE
/s/ Firooz Zandi	11-15-99
CHIEF HIGHWAY ENGINEER	DATE
ORIGINALLY APPROVED	5-01-98

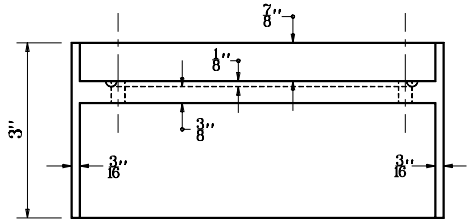

CROSS SECTION OF HOUSING ADAPTOR

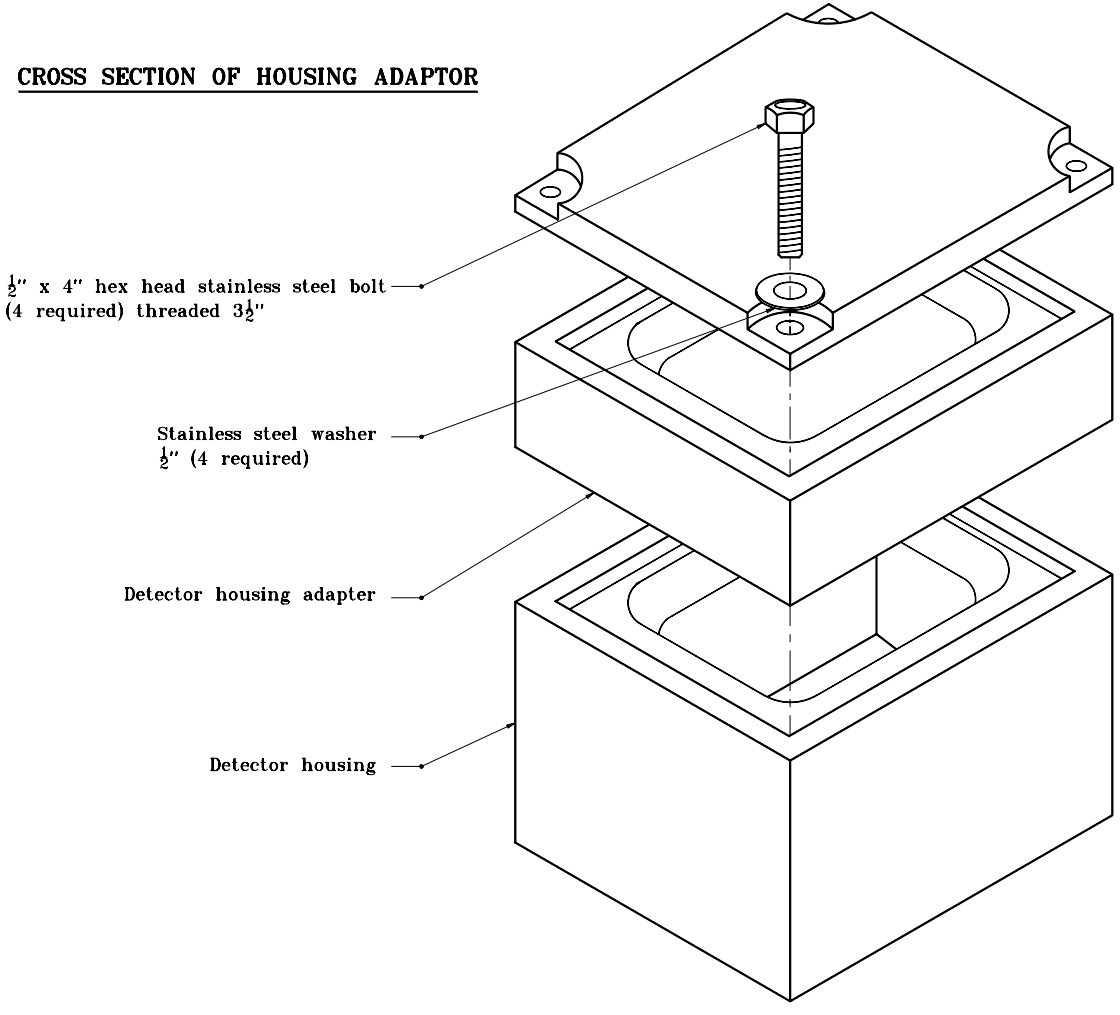

INDIANA DEPARTMENT OF TRANSPORTATION

DETAILS OF DETECTOR HOUSING ADAPTER

MARCH 1995

STANDARD DRAWING NO. **E 805-SGDH-03**

ANTHONY L. UREMOVICH REGISTERED No. 18095 STATE OF INDIANA PROFESSIONAL ENGINEER

DESIGN STANDARDS ENGINEER

DETAILS PLACED IN THIS FORMAT 11-15-99

/s/ Anthony L. Uremovich 11-15-99
DESIGN STANDARDS ENGINEER DATE

/s/ Firooz Zandi 11-15-99
CHIEF HIGHWAY ENGINEER DATE

ORIGINALLY APPROVED 3-01-95

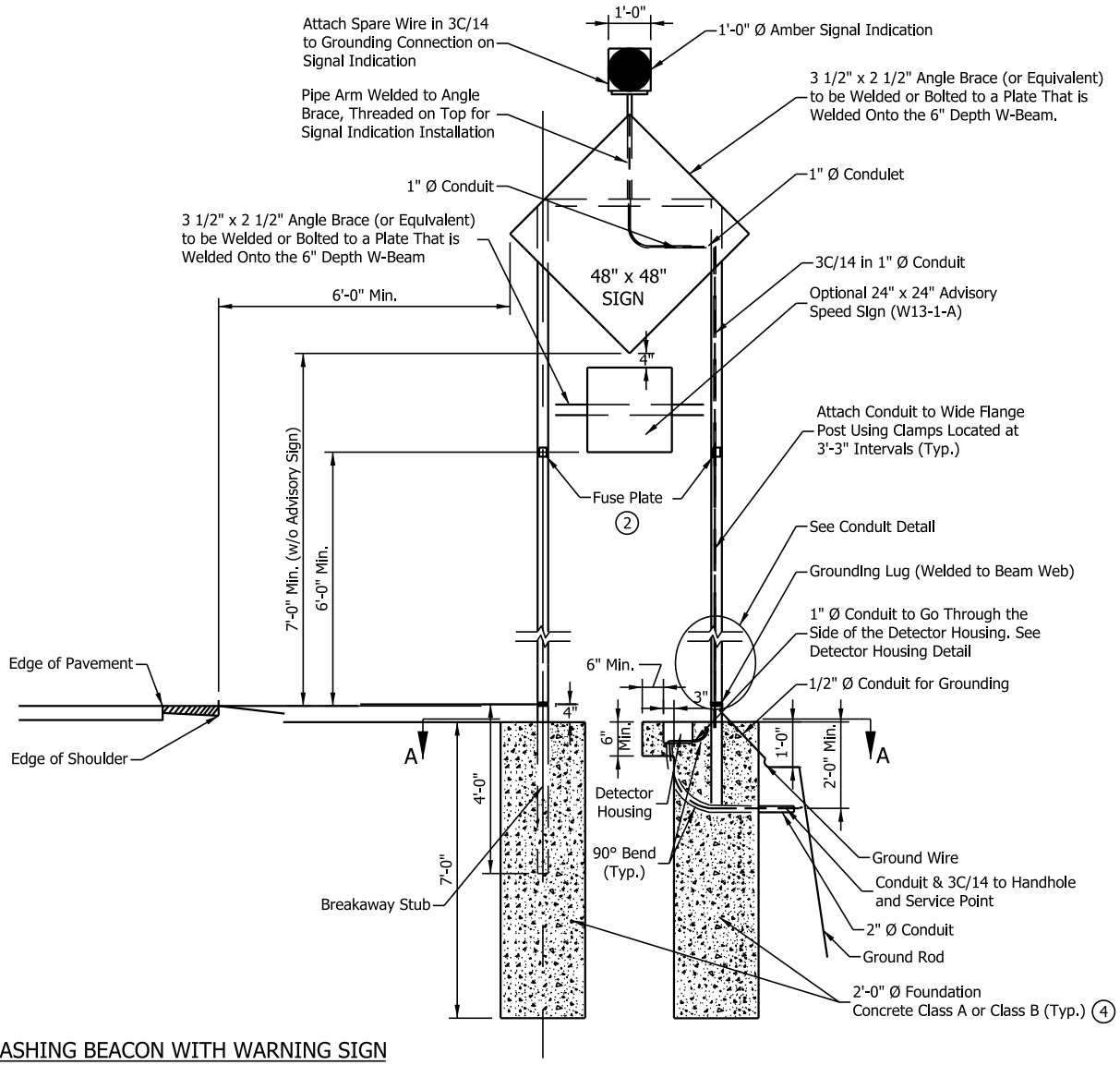

FLASHING BEACON WITH WARNING SIGN ON W 6 x 9 BEAM

NOTES:

1. See Standard Drawing E 802-SNGP-03 through -05 for breakaway details and dimensions. Use beam size W 6 x 9.
2. The fuse plate shall be 6 in. below the lowest fastener of the sign. Fuse plate shall be used on both the front and back sides.
3. See Standard Drawing E 805-SGFB-02 for conduit and detector housing details.
4. See Standard Drawing E 802-SNGP-16 for foundation details.

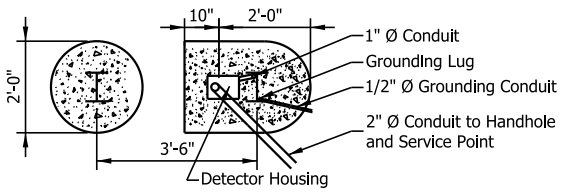

SECTION A-A

INDIANA DEPARTMENT OF TRANSPORTATION

FLASHING BEACON WITH WARNING SIGN

SEPTEMBER 2017

STANDARD DRAWING NO. E 805-SGFB-01

DAVID H. BORUFF REGISTERED No. 60900348 STATE OF INDIANA PROFESSIONAL ENGINEER

/s/ David H. Boruff 03/15/17
DESIGN STANDARDS ENGINEER DATE

/s/ John Leckie 04/10/17
CHIEF ENGINEER DATE

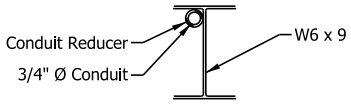

SECTION A-A

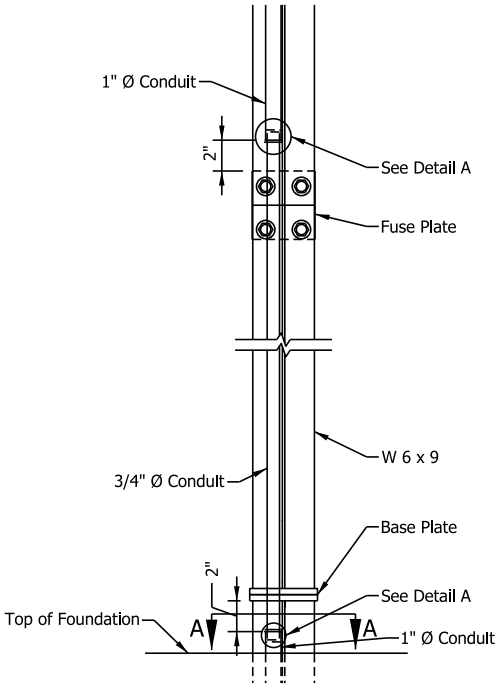

CONDUIT DETAIL

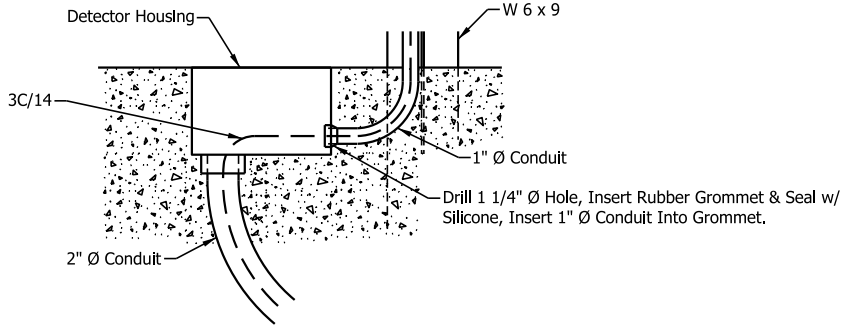

DETECTOR HOUSING DETAIL

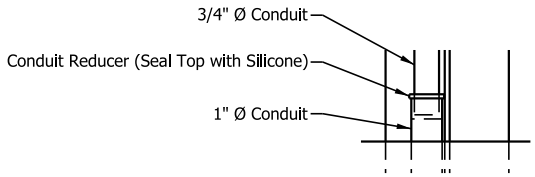

DETAIL A
INVERT FOR TOP CONDUIT JOINT

INDIANA DEPARTMENT OF TRANSPORTATION

FLASHING BEACON WITH WARNING SIGN DETAILS

SEPTEMBER 2017

STANDARD DRAWING NO. E 805-SGFB-02

DAVID H. BORUFF REGISTERED No. 60900348 STATE OF INDIANA PROFESSIONAL ENGINEER

/s/ David H. Boruff 03/15/17
DESIGN STANDARDS ENGINEER DATE

/s/ John Leckie 04/10/17
CHIEF ENGINEER DATE

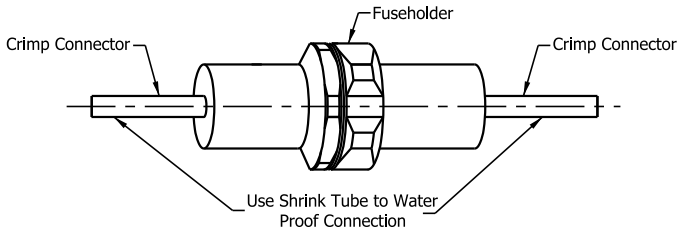

FUSEHOLDER KIT
TO BE USED IN DETECTOR HOUSING

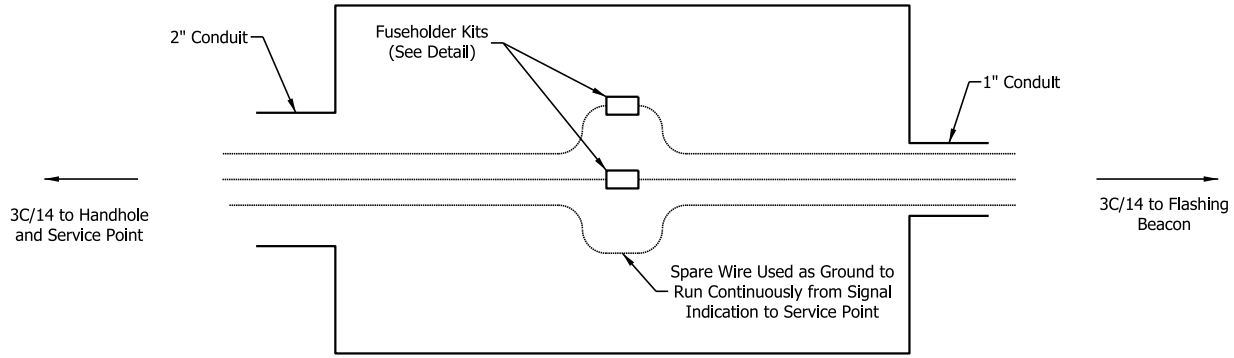

DETECTOR HOUSING CONNECTIONS DETAIL

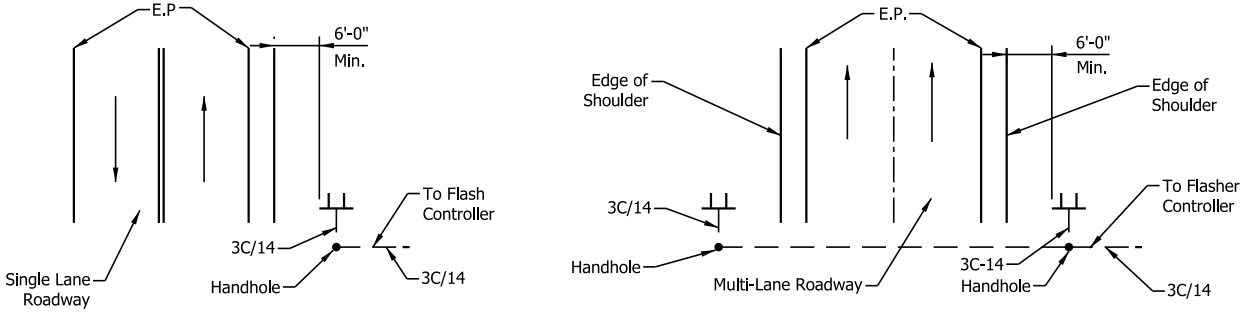

TYPICAL FLASHING BEACON CONFIGURATION

INDIANA DEPARTMENT OF TRANSPORTATION

FLASHING BEACON WITH
WARNING SIGN DETAILS

SEPTEMBER 2017

STANDARD DRAWING NO. E 805-SGFB-03

DAVID H. BORUFF
REGISTERED
No.
60900348
STATE OF
INDIANA
PROFESSIONAL ENGINEER

/s/ David H. Boruff 03/15/17
DESIGN STANDARDS ENGINEER DATE

/s/ John Leckie 04/10/17
CHIEF ENGINEER DATE

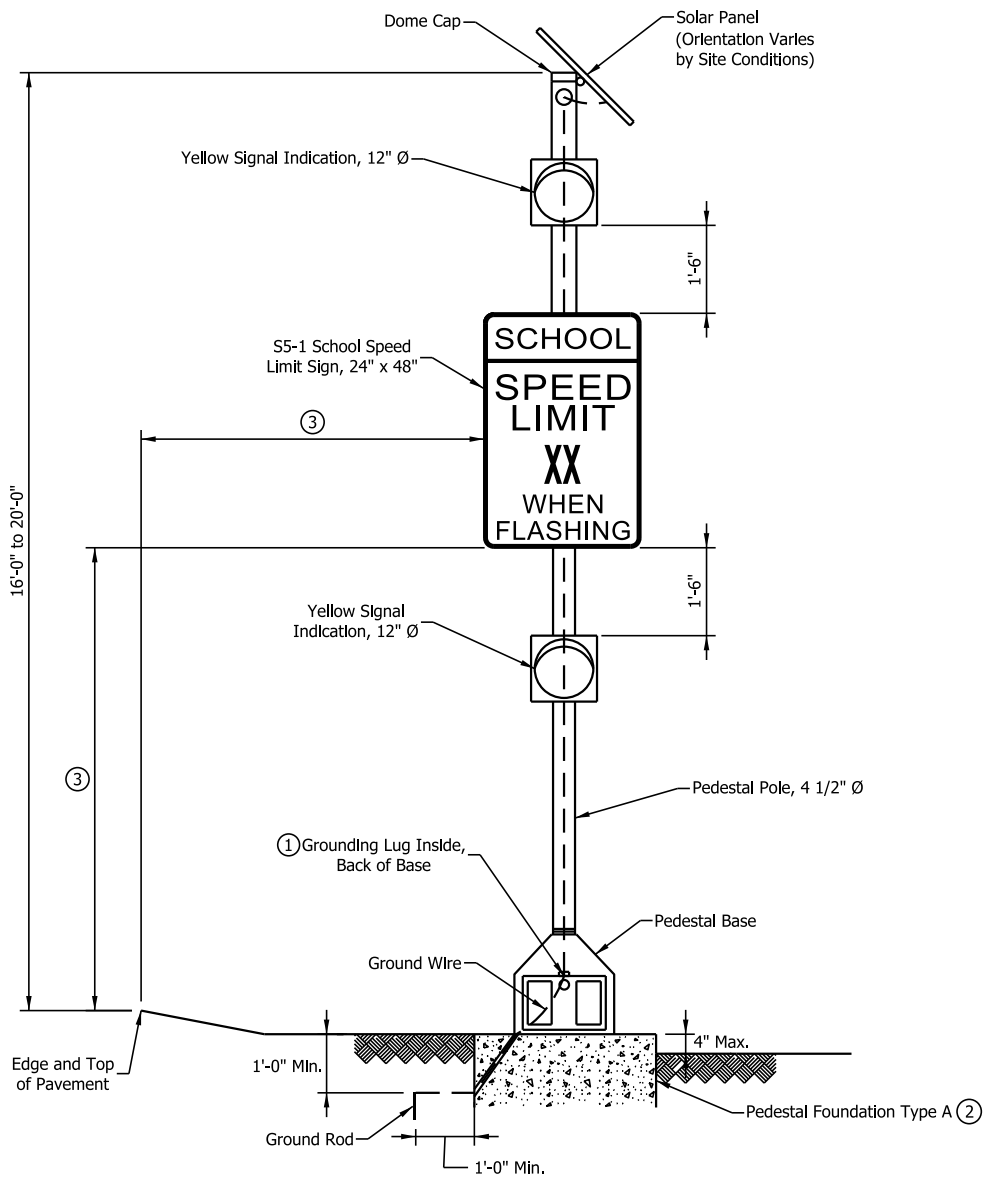

FRONT VIEW

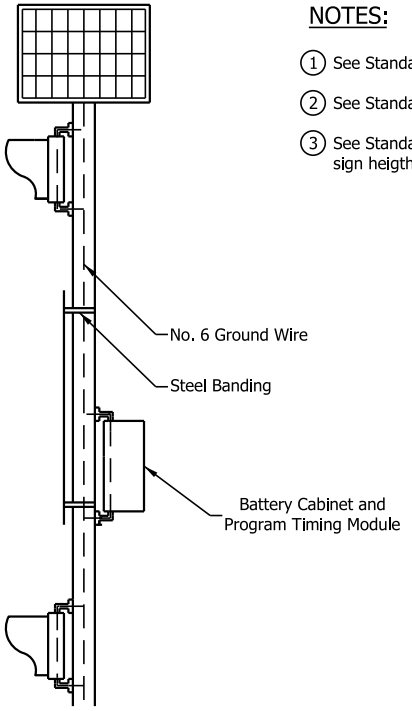

SIDE VIEW

NOTES:

1. See Standard Drawing E 805-SGGR-03 for grounding lug details.
2. See Standard Drawing E 805-SGCF-03 for Foundation Type A.
3. See Standard Drawing E 802-SNPL-02 for edge of pavement offset and sign heigth.

INDIANA DEPARTMENT OF TRANSPORTATION

PEDESTAL MOUNTED SOLAR POWERED SCHOOL SPEED LIMIT FLASHING BEACON ASSEMBLY

SEPTEMBER 2017

STANDARD DRAWING NO. E 805-SGFB-04

DAVID H. BORUFF REGISTERED No. 60900348 STATE OF INDIANA PROFESSIONAL ENGINEER

/s/ David H. Boruff 03/15/17
DESIGN STANDARDS ENGINEER DATE

/s/ John Leckie 04/10/17
CHIEF ENGINEER DATE

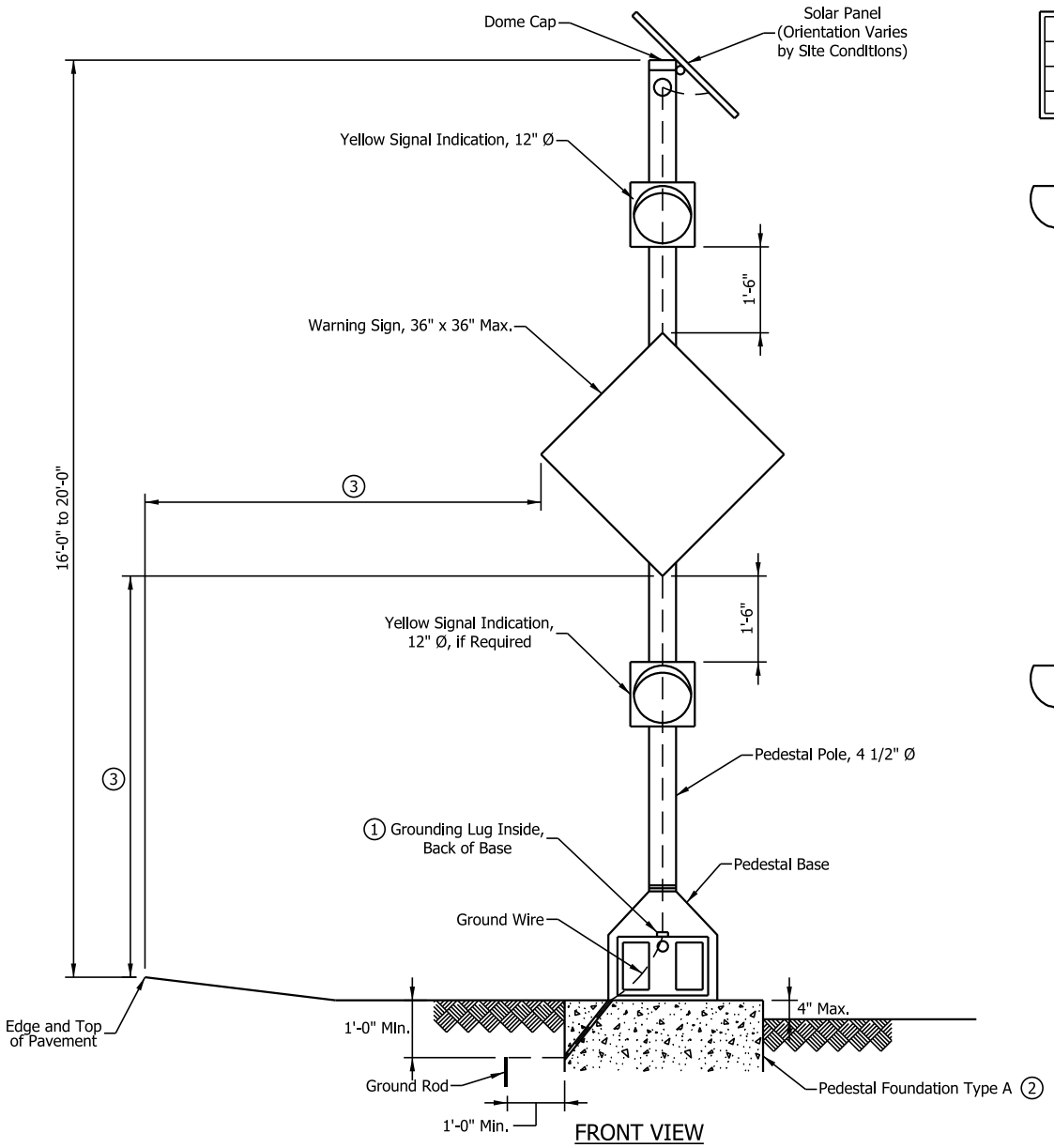

FRONT VIEW

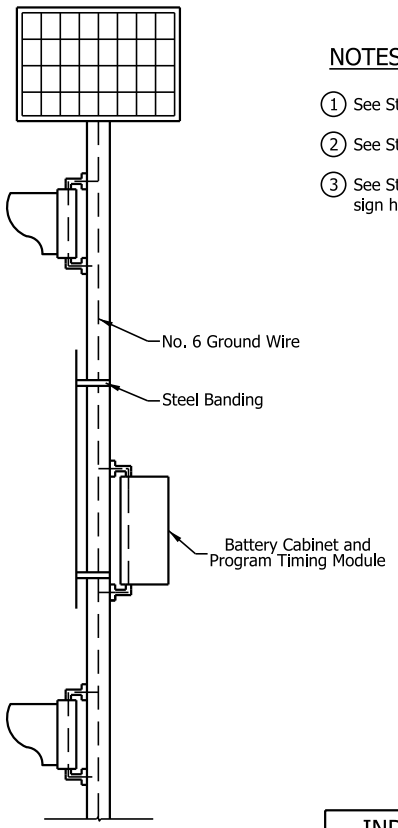

SIDE VIEW

NOTES:

1. See Standard Drawing E 805-SGGR-03 for grounding lug details.
2. See Standard Drawing E 805-SGCF-03 for Foundation Type A.
3. See Standard Drawing E 802-SNPL-02 for edge of pavement offset and sign heigth.

INDIANA DEPARTMENT OF TRANSPORTATION

PEDESTAL MOUNTED SOLAR POWERED
WARNING SIGN
FLASHING BEACON ASSEMBLY

SEPTEMBER 2017

STANDARD DRAWING NO. E 805-SGFB-05

DAVID H. BORUFF
REGISTERED
No.
60900348
STATE OF
INDIANA
PROFESSIONAL ENGINEER

/s/ David H. Boruff 03/15/17
DESIGN STANDARDS ENGINEER DATE

/s/ John Leckie 04/10/17
CHIEF ENGINEER DATE

GENERAL NOTES

(A) ½" preformed joint

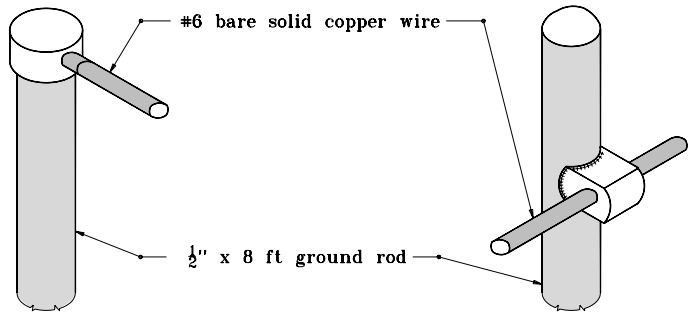

TOP CONNECTION

SIDE CONNECTION

THERMO WELD

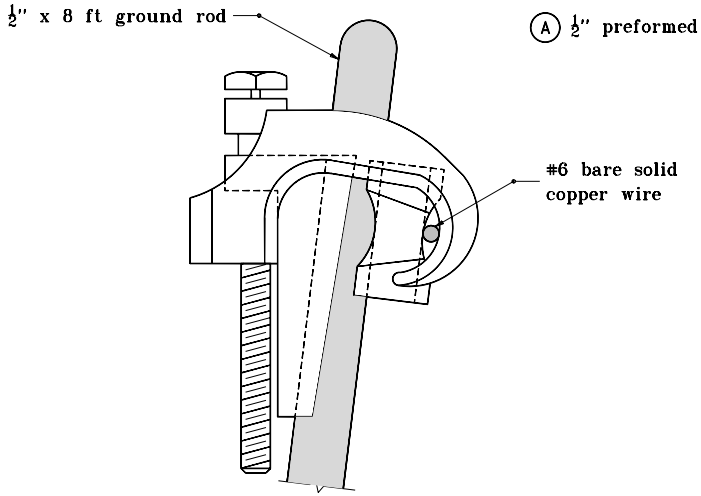

GROUNDING GRID

GROUND ROD CONNECTIONS

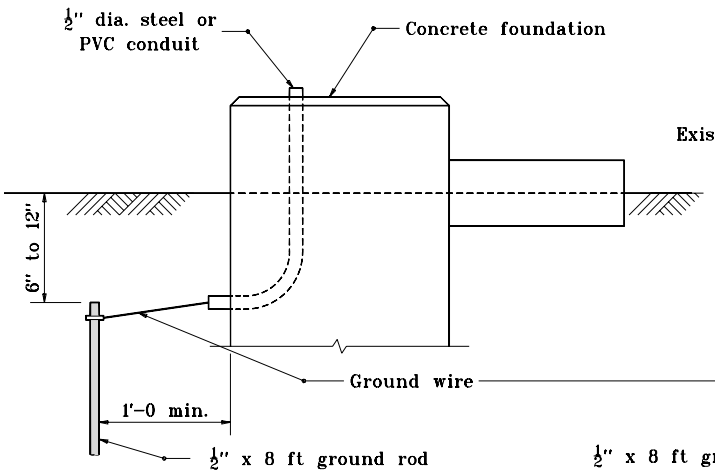

TYPICAL DETAIL
GROUND ROD IN EARTH

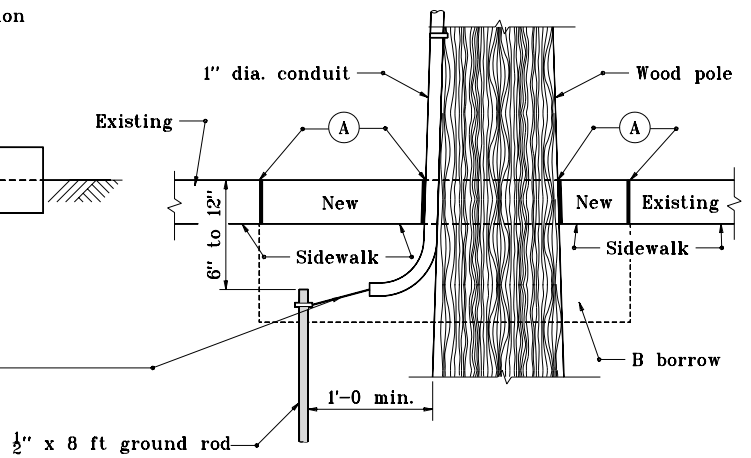

TYPICAL DETAIL
GROUND ROD IN SIDEWALK

INDIANA DEPARTMENT OF TRANSPORTATION

GROUND ROD

SEPTEMBER 1998

STANDARD DRAWING NO. E 805-SGGR-01

ANTHONY L. UREMOVICH REGISTERED No. 18095 STATE OF INDIANA PROFESSIONAL ENGINEER

DESIGN STANDARDS ENGINEER

DETAILS PLACED IN THIS FORMAT	11-15-99
/s/ Anthony L. Uremovich, DESIGN STANDARDS ENGINEER	11-15-99
/s/ Firooz Zandi, CHIEF HIGHWAY ENGINEER	11-15-99
ORIGINALLY APPROVED	9-01-98

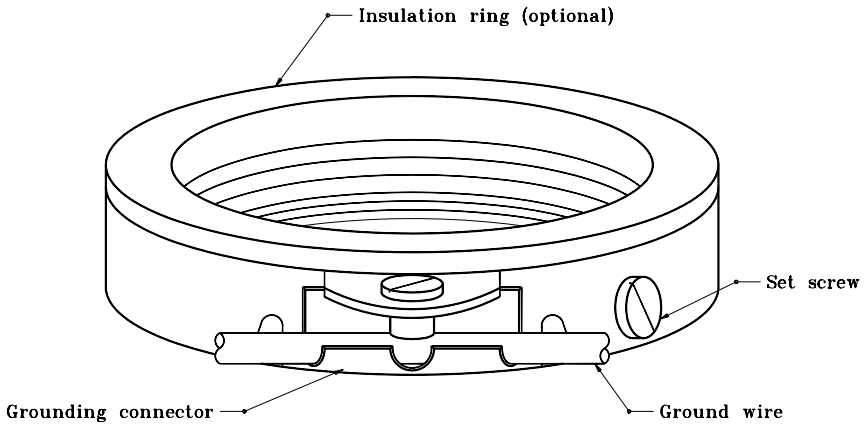

INDIANA DEPARTMENT OF TRANSPORTATION

THREADED GROUNDING BUSHING

SEPTEMBER 1998

STANDARD DRAWING NO. **E 805-SGGR-02**

ANTHONY L. UREMOVICH REGISTERED No. 18095 STATE OF INDIANA PROFESSIONAL ENGINEER

DESIGN STANDARDS ENGINEER

DETAILS PLACED IN THIS FORMAT	11-15-99
/s/ Anthony L. Uremovich	11-15-99
DESIGN STANDARDS ENGINEER	DATE
/s/ Firooz Zandi	11-15-99
CHIEF HIGHWAY ENGINEER	DATE
ORIGINALLY APPROVED	9-01-98

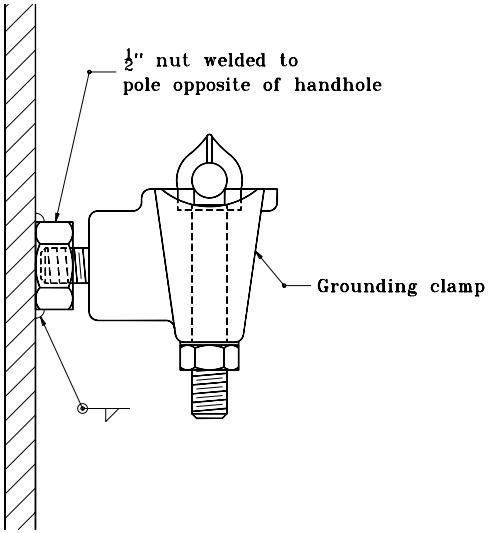

ALUMINUM POLES

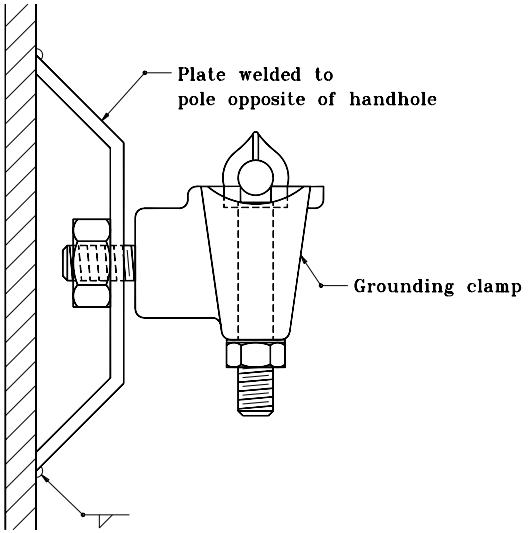

STEEL POLES

GROUNDING POST DETAIL

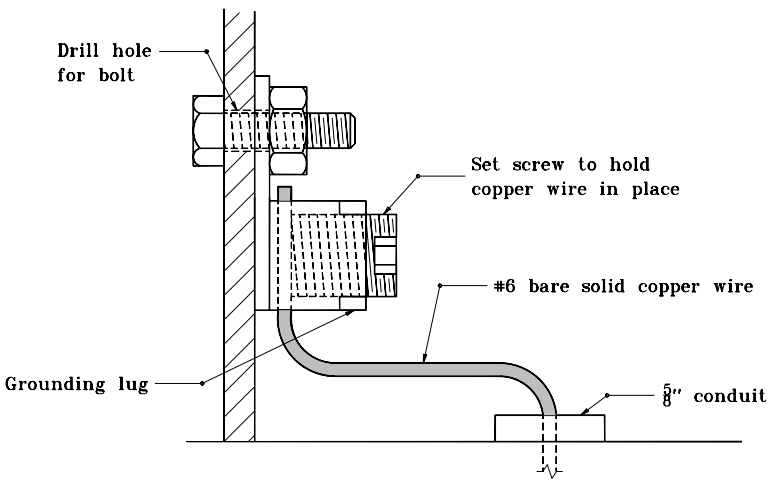

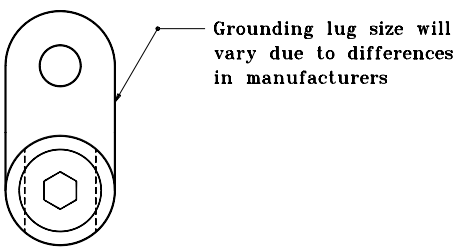

GROUNDING LUG DETAIL
(FIELD CONNECTION)

INDIANA DEPARTMENT OF TRANSPORTATION

GROUNDING DETAILS

MARCH 1995

STANDARD DRAWING NO. **E 805-SGGR-03**

ANTHONY L. UREMOVICH REGISTERED No. 18095 STATE OF INDIANA PROFESSIONAL ENGINEER

DESIGN STANDARDS ENGINEER

DETAILS PLACED IN THIS FORMAT	11-15-99
/s/ Anthony L. Uremovich DESIGN STANDARDS ENGINEER	11-15-99 DATE
/s/ Firooz Zandi CHIEF HIGHWAY ENGINEER	11-15-99 DATE
ORIGINALLY APPROVED	3-01-95

TYPICAL LOOP DETECTION SAW-CUT PLAN (ONE LANE)

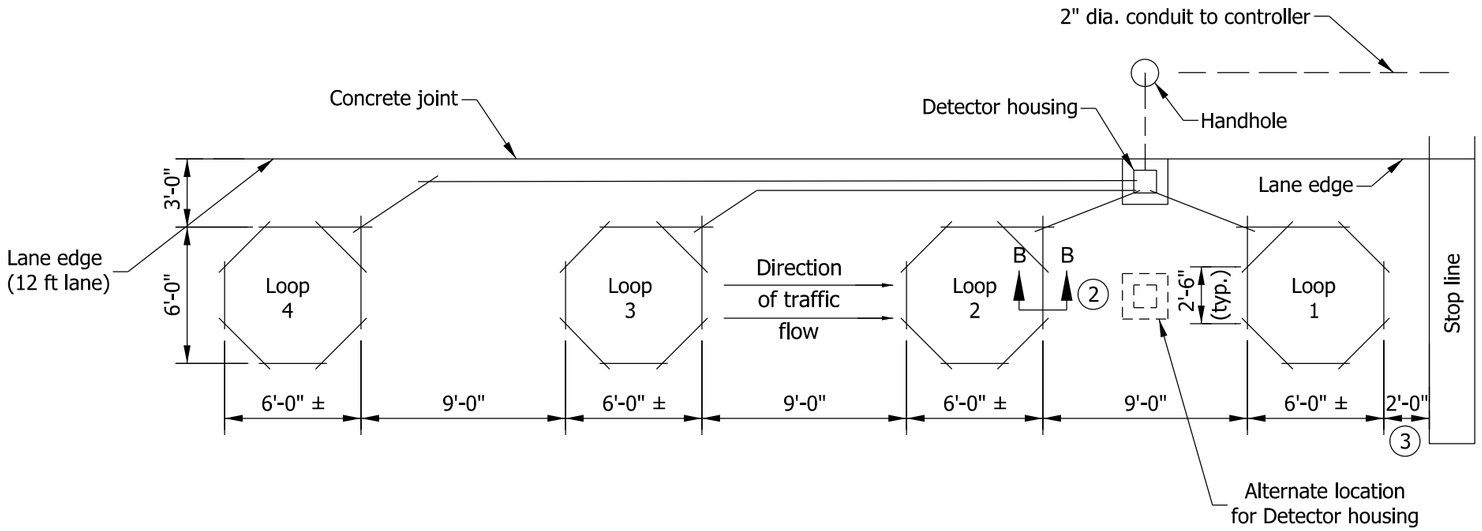

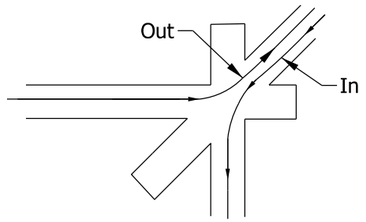

TYPICAL LOOP DETECTION (TWO LANES)

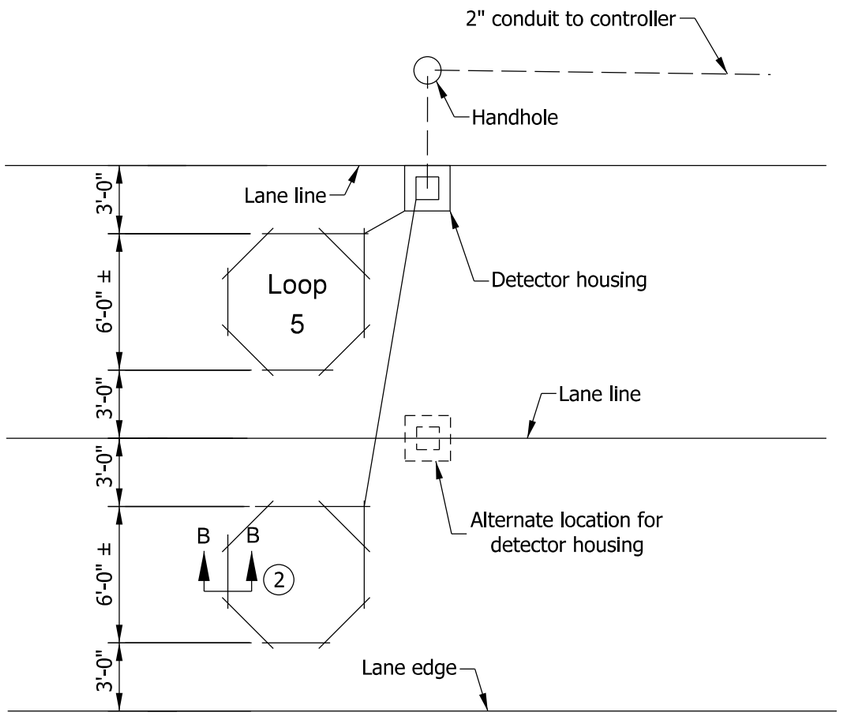

NOTES

1. Loop saw-cuts as shown on plan sheets are to be considered as schematic only. In the event of discrepancies, this detail shall govern.

(2) See Standard Drawing E 805-SGLI-02 for Section B-B.

(3) This distance is typical depending on the intersection geometrics; a loop can be sawed in front of the stop line.

INDIANA DEPARTMENT OF TRANSPORTATION

TRAFFIC SIGNAL
LOOP INSTALLATION

SEPTEMBER 2012

STANDARD DRAWING NO. E 805-SGLI-01

RICHARD L. VanCLEAVE REGISTERED No. 9750 STATE OF INDIANA PROFESSIONAL ENGINEER

/s/ Richard L. VanCleave 09/04/12
SUPERVISOR, ROADWAY STANDARDS DATE

/s/ Mark A. Miller 09/04/12
CHIEF ENGINEER DATE

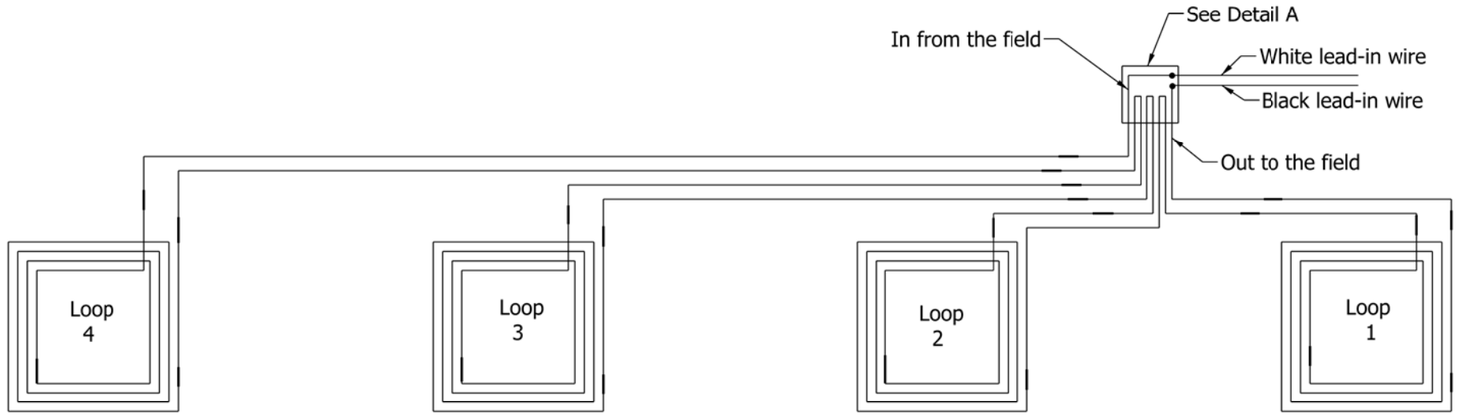

LOOP WIRING DIAGRAM

NOTES:

1. Duct loop wires to be twisted around each other a minimum of 5 turns/ft then coiled and tied with self-locking strips.
2. Loop wires to be tagged in or out as indicated.
3. See splice detail (waterproofing) on Standard Drawing E 805-SGLI-04.
4. The loop wire is continuously wound in the loop saw slot for the required number of turns.

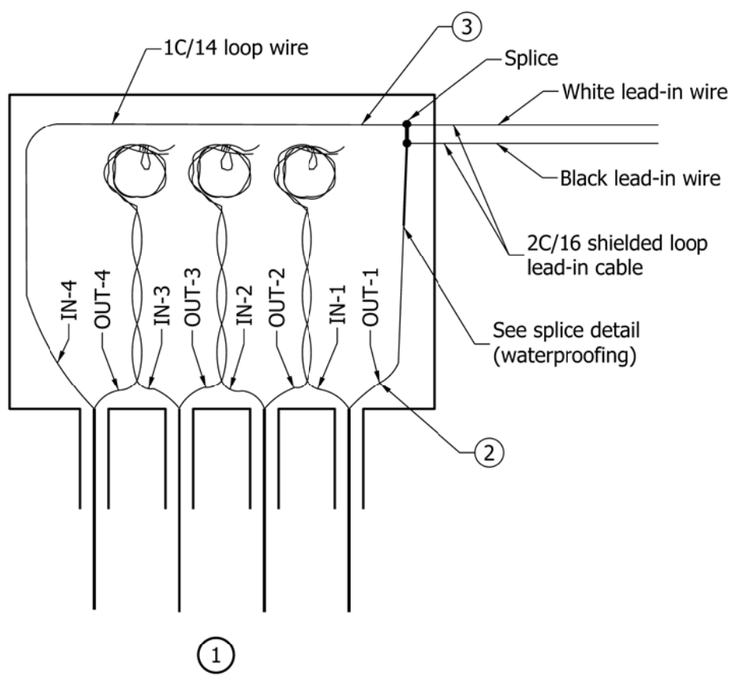

DETAIL A
DETECTOR HOUSING WIRING

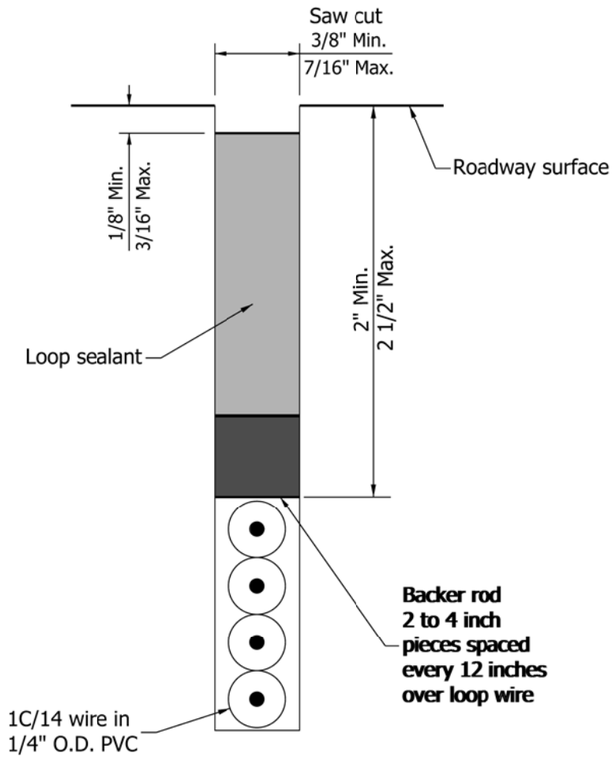

LOOP SAW-CUT DETAIL
SECTION B-B

INDIANA DEPARTMENT OF TRANSPORTATION

TRAFFIC SIGNAL
LOOP INSTALLATION

SEPTEMBER 2010

STANDARD DRAWING NO. E 805-SGLI-02

RICHARD L. VanCLEAVE
REGISTERED
No. 9750
STATE OF INDIANA
PROFESSIONAL ENGINEER

DESIGN STANDARDS ENGINEER

/s/ Richarh L. Vancleave 09/01/10
DESIGN STANDARDS ENGINEER DATE

/s/ Mark A. Miller 09/01/10
CHEIF HIGHWAY ENGINEER DATE

GENERAL NOTES

(1) For detail, see Standard Drawing No. E 805-SGDH-01.

(2) For detail, see Standard Drawing No. E 805-SGDH-02

(3) For detail, see Standard Drawing No. E 805-SGLI-04.

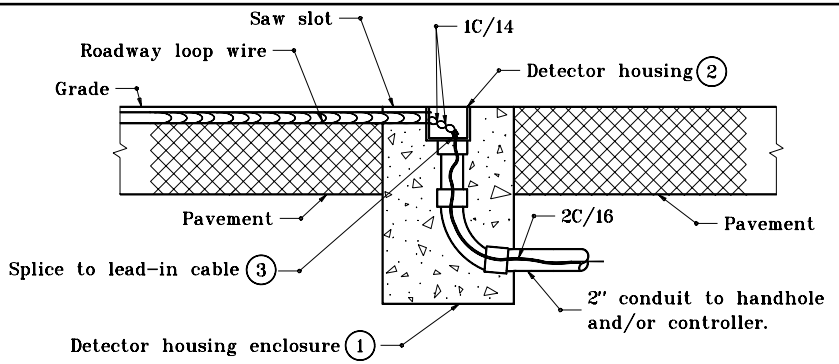

CROSS SECTION FOR NON-CURBED SECTIONS

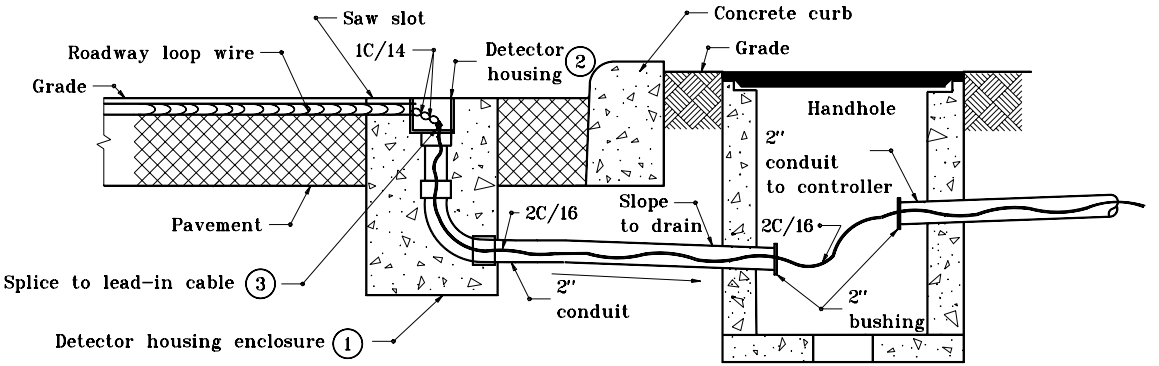

CROSS SECTION FOR CONCRETE CURB SECTIONS

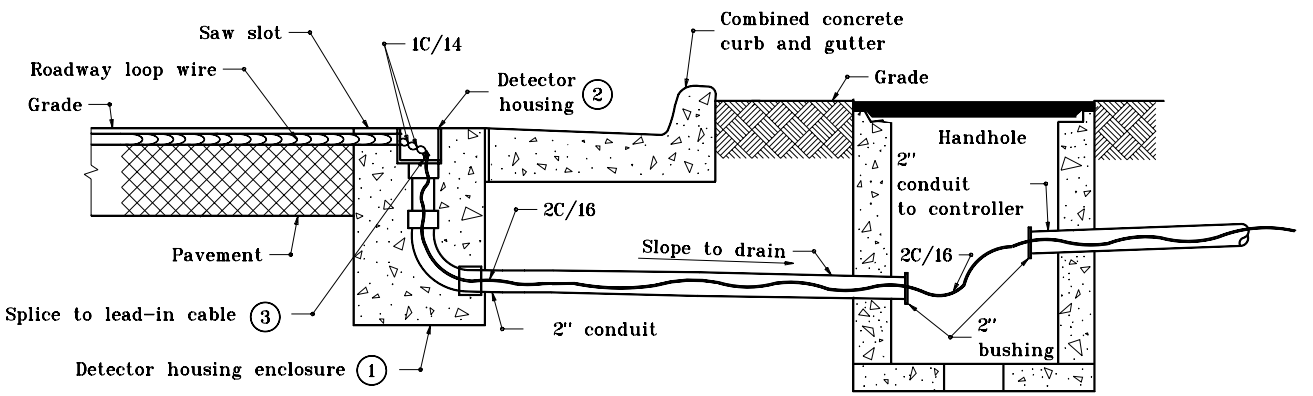

CROSS SECTION FOR COMBINED CURB & GUTTER SECTIONS

INDIANA DEPARTMENT OF TRANSPORTATION

TRAFFIC SIGNAL LOOP DETECTOR HOUSING INSTALLATION

MARCH 1995

STANDARD DRAWING NO. **E 805-SGLI-03**

ANTHONY L. UREMOVICH REGISTERED No. 18095 STATE OF INDIANA PROFESSIONAL ENGINEER

DESIGN STANDARDS ENGINEER

DETAILS PLACED IN THIS FORMAT	11-15-99
/s/ Anthony L. Uremovich DESIGN STANDARDS ENGINEER	11-15-99 DATE
/s/ Firooz Zandi CHIEF HIGHWAY ENGINEER	11-15-99 DATE
ORIGINALLY APPROVED	3-01-95

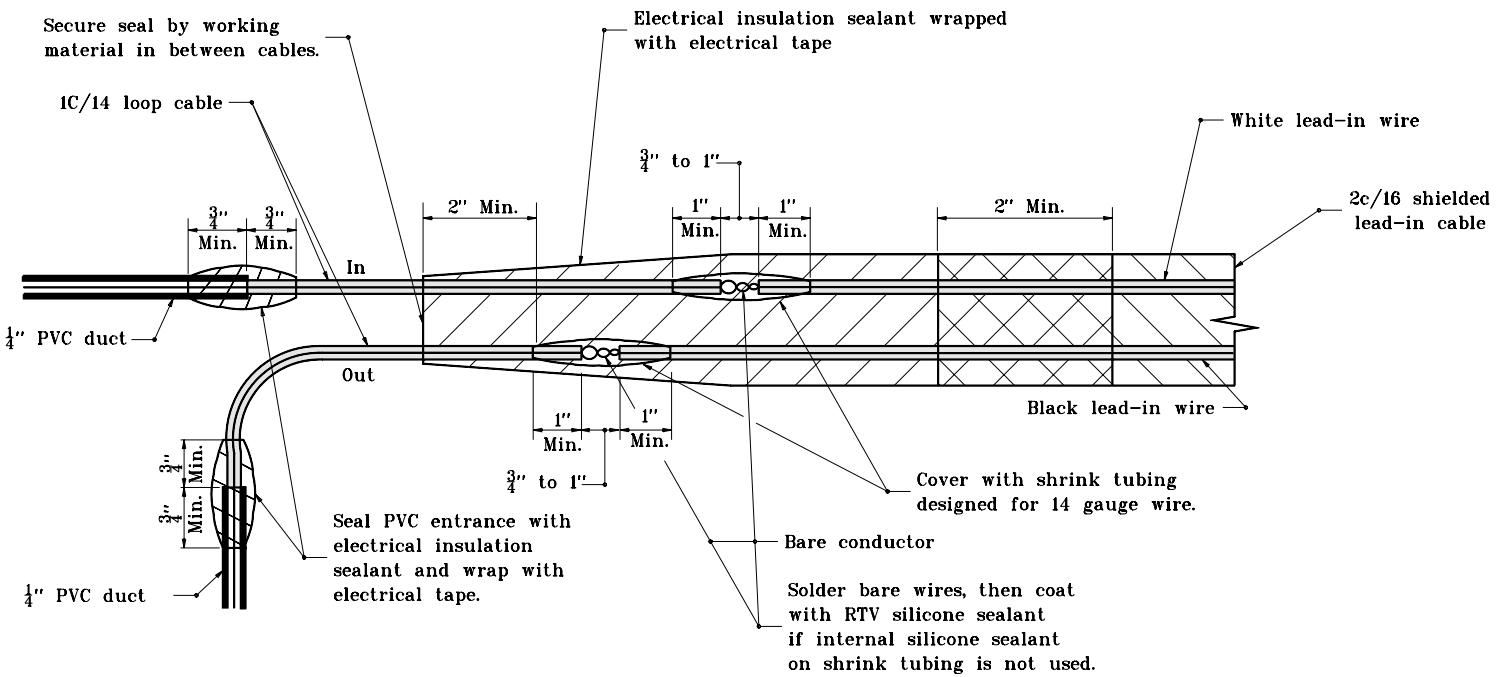

SPLICE DETAIL

INDIANA DEPARTMENT OF TRANSPORTATION

TRAFFIC SIGNAL LOOP SPLICE

MARCH 1995

STANDARD DRAWING NO. **E 805-SGLI-04**

ANTHONY L. UREMOVICH REGISTERED No. 18095 STATE OF INDIANA PROFESSIONAL ENGINEER

DESIGN STANDARDS ENGINEER

DETAILS PLACED IN THIS FORMAT 11-15-99

/s/ Anthony L. Uremovich 11-15-99
DESIGN STANDARDS ENGINEER DATE

/s/ Firooz Zandi 11-15-99
CHIEF HIGHWAY ENGINEER DATE

ORIGINALLY APPROVED 3-01-95

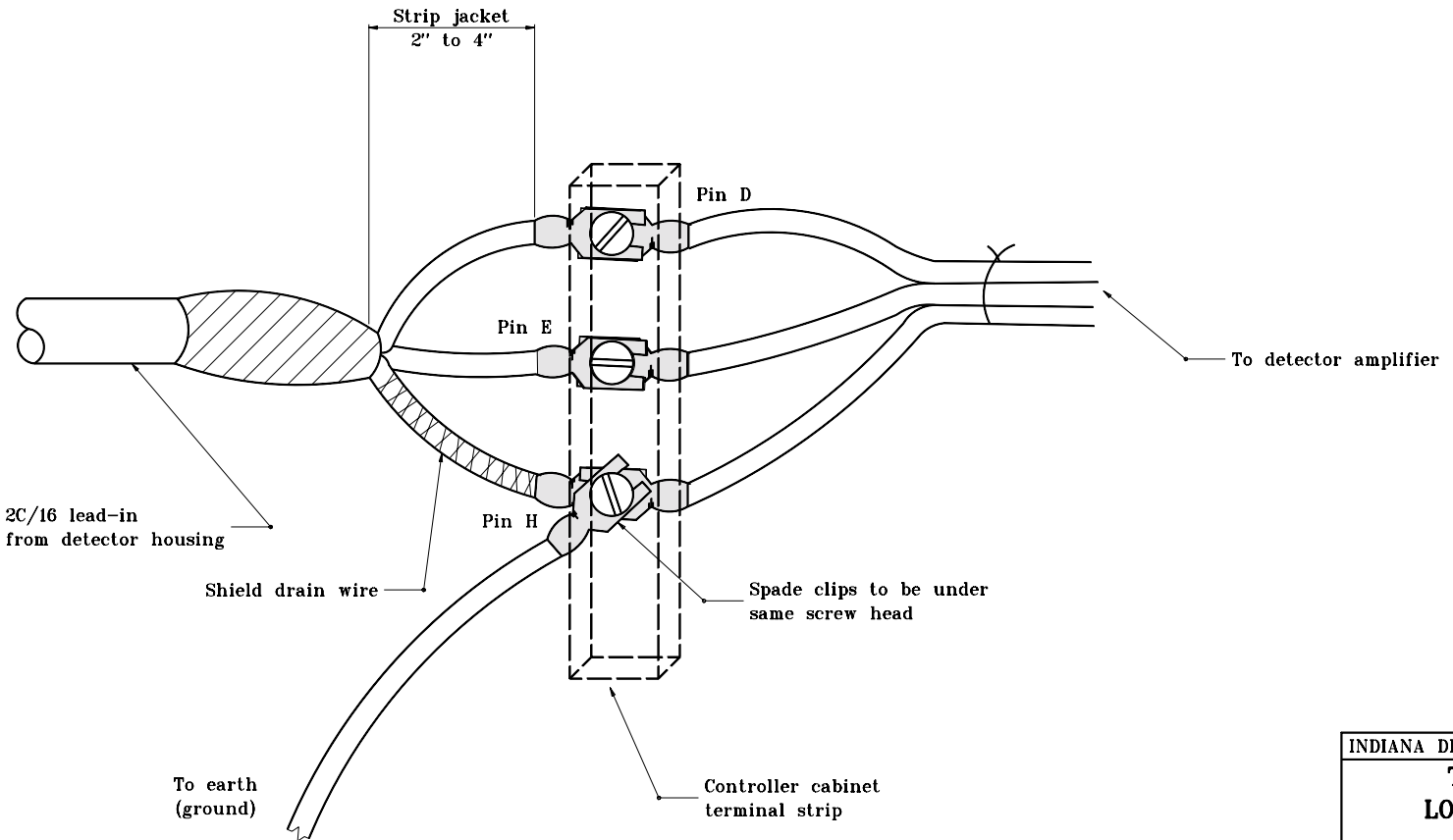

LOOP LEAD-IN
CONTROLLER CABINET CONNECTION DETAIL

INDIANA DEPARTMENT OF TRANSPORTATION

TRAFFIC SIGNAL
LOOP INSTALLATION

MARCH 1995

STANDARD DRAWING NO. **E 805-SGLI-05**

ANTHONY L. UREMOVICH REGISTERED No. 18095 STATE OF INDIANA PROFESSIONAL ENGINEER

DESIGN STANDARDS ENGINEER

DETAILS PLACED IN THIS FORMAT	11-15-99
/s/ Anthony L. Uremovich DESIGN STANDARDS ENGINEER	11-15-99 DATE
/s/ Firooz Zandi CHIEF HIGHWAY ENGINEER	11-15-99 DATE
ORIGINALLY APPROVED	3-01-95

TYPICAL LOOP DETECTION SAW-CUT PLAN (ONE LANE)

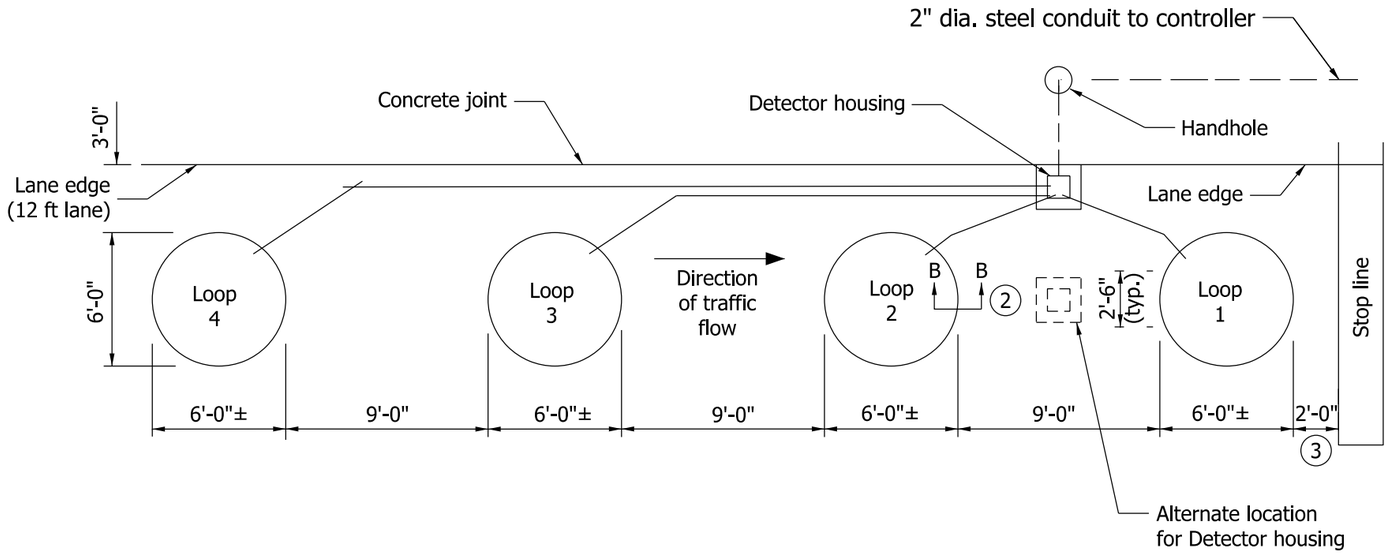

TYPICAL LOOP DETECTION (TWO LANES)

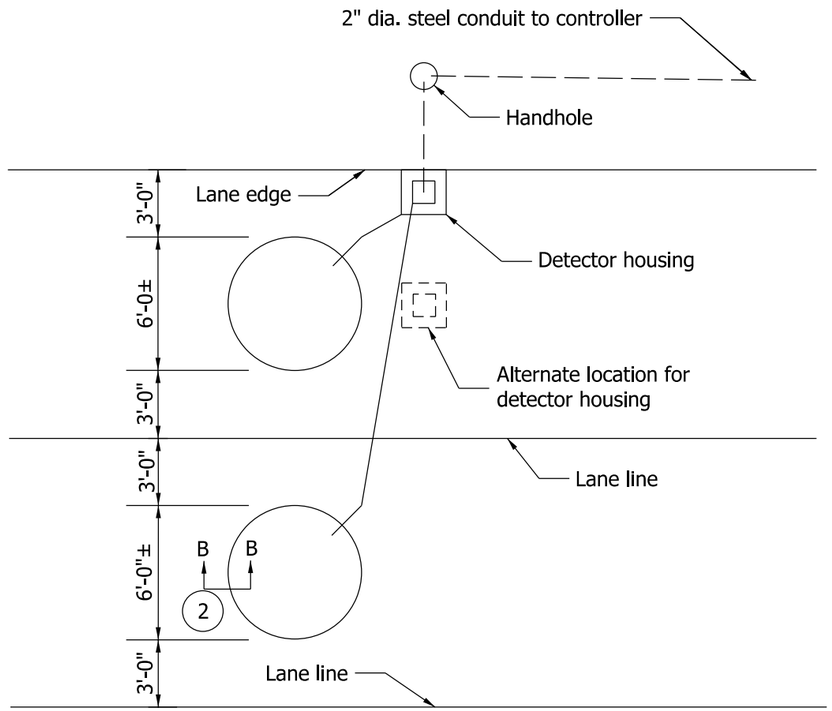

DETAIL A
DETECTOR HOUSING WIRING

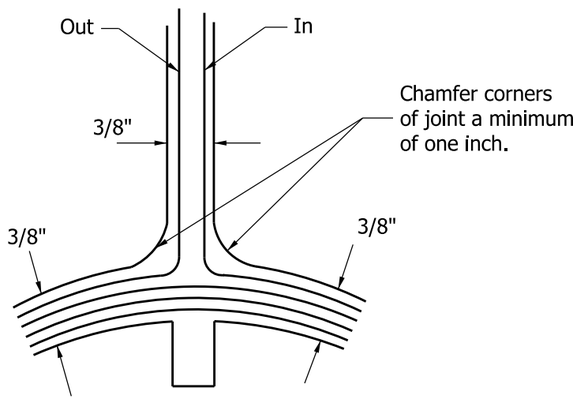

The loop wire is continously wound in the loop saw slot for the required numbers of turns (4 turns shown)

NOTES:

1. Loop saw-cuts as shown on the plans are to be considered as schematic only. In the event of discrepancies, this detail shall govern.
2. See Standard Drawing E 805-SGLI-02 for Section B-B.
3. This distance is typical depending on the intersection geometrics; a loop can be sawed in front of the stop line.
4. The loop(s) shall be centered transversely in the travel lane.
5. The saw slot for the line from the detector housing to the circular loop shall be approximately perpendicular to the tangent of the loop at the point of intersection.

INDIANA DEPARTMENT OF TRANSPORTATION

TRAFFIC SIGNAL LOOP INSTALLATION

SEPTEMBER 2011

STANDARD DRAWING NO. E 805-SGLI-06

RICHARD L. VanCLEAVE REGISTERED No. 9750 STATE OF INDIANA PROFESSIONAL ENGINEER

DESIGN STANDARDS ENGINEER

/s/ Richarh L. Vancleave 09/01/11
DESIGN STANDARDS ENGINEER DATE

/s/ Mark A. Miller 09/01/11
CHEIF HIGHWAY ENGINEER DATE

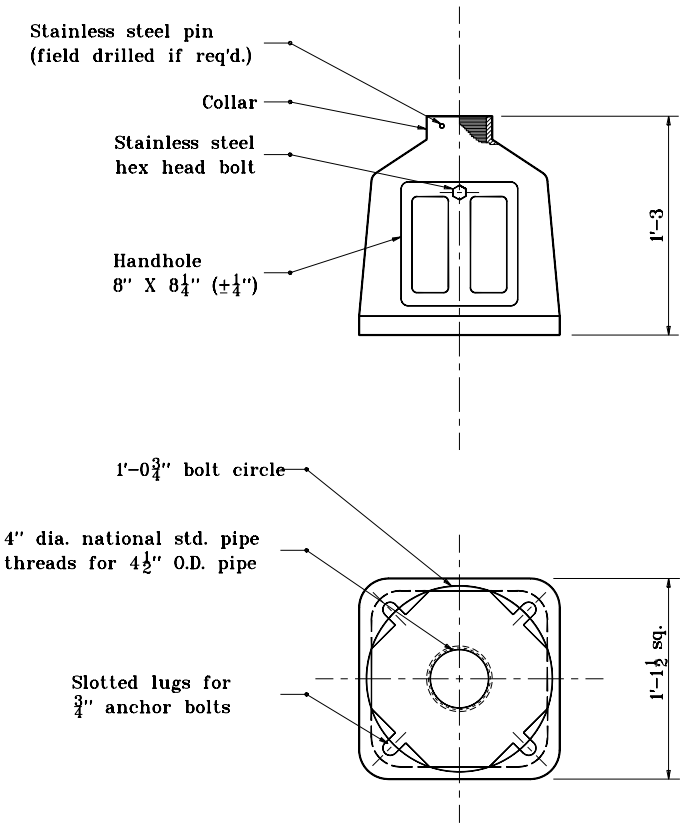

BOTTOM VIEW

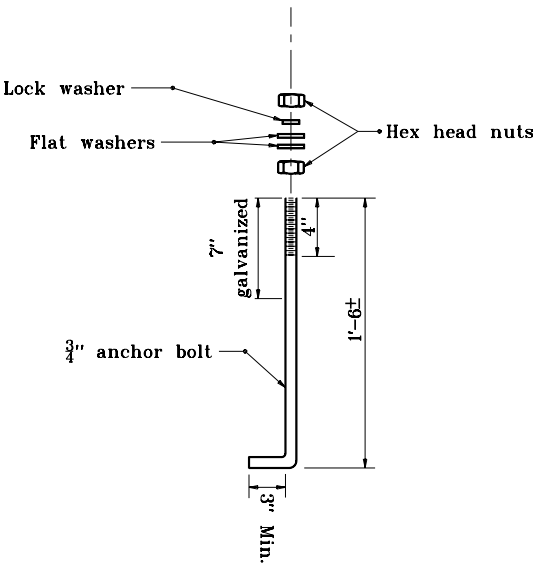

ANCHOR BOLT FOR
A, M, AND P-1
FOUNDATIONS

INDIANA DEPARTMENT OF TRANSPORTATION

ANCHOR BOLTS AND PEDESTAL BASE

SEPTEMBER 1998

STANDARD DRAWING NO. **E 805-SGPB-01**

ANTHONY L. UREMOVICH REGISTERED No. 18095 STATE OF INDIANA PROFESSIONAL ENGINEER

DESIGN STANDARDS ENGINEER

DETAILS PLACED IN THIS FORMAT	11-15-99
/s/ Anthony L. Uremovich DESIGN STANDARDS ENGINEER	11-15-99 DATE
/s/ Firooz Zandi CHIEF HIGHWAY ENGINEER	11-15-99 DATE
ORIGINALLY APPROVED	9-01-98

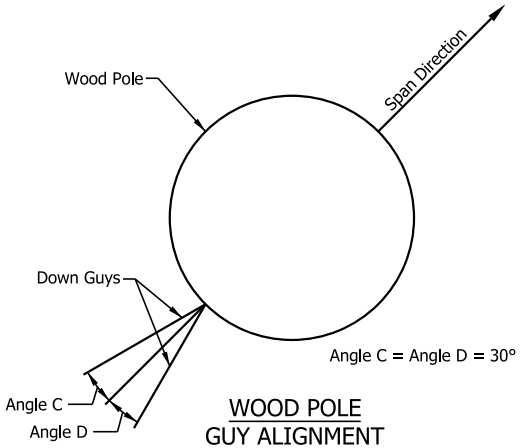

WOOD POLE
GUY ALIGNMENT
(1 Span)

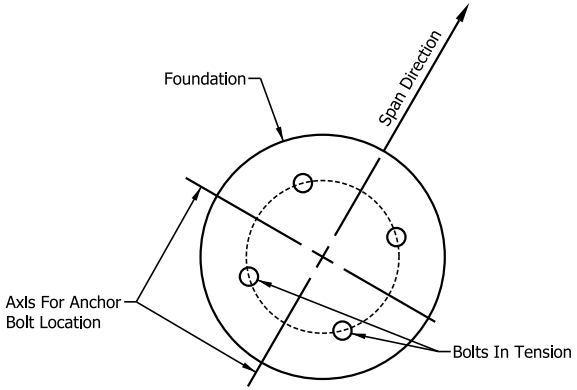

STEEL STRAIN POLE
ANCHOR BOLT ORIENTATION
(1 Span)

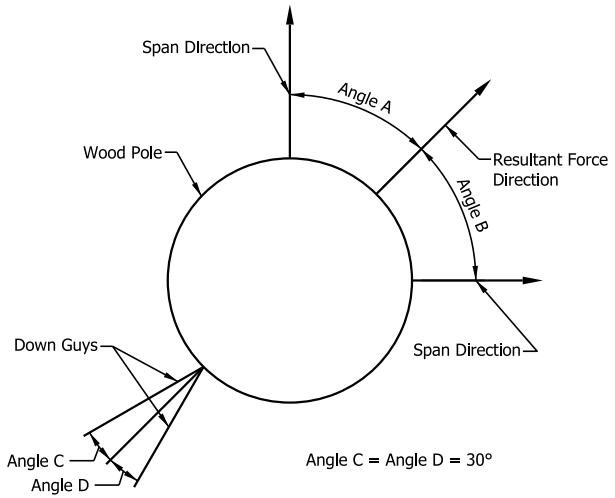

WOOD POLE
GUY ALIGNMENT
(2 Spans)

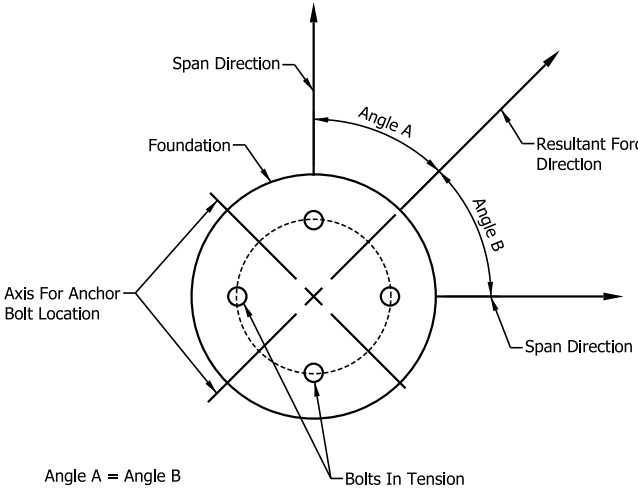

STEEL STAIN POLE
ANCHOR BOLT ORIENTATION
(2 Spans)

INDIANA DEPARTMENT OF TRANSPORTATION

POLE ALIGNMENT

SEPTEMBER 2017

STANDARD DRAWING NO. E 805-SGSC-01

DAVID H. BORUFF
REGISTERED
No.
60900348
STATE OF
INDIANA
PROFESSIONAL ENGINEER

/s/ David H. Boruff 06/23/16
DESIGN STANDARDS ENGINEER DATE

/s/ Mark A. Miller 06/29/16
CHIEF ENGINEER DATE

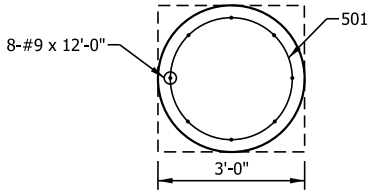

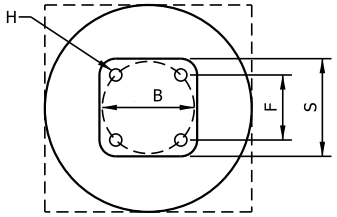

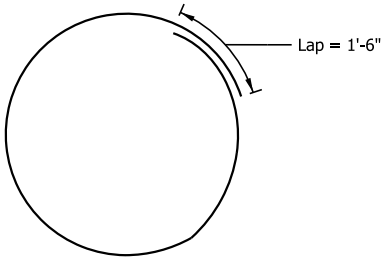

501 x 9'-4"

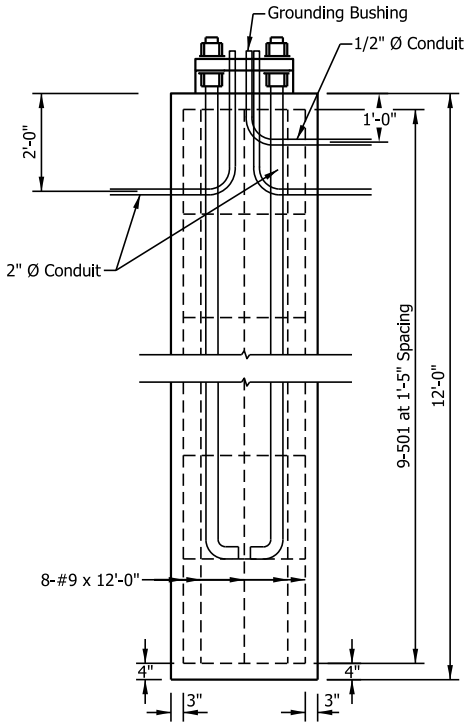

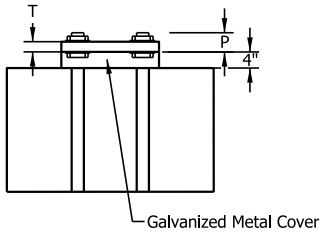

BASE PLATE AND ANCHOR BOLT DATA								
Anchor Bolts	B	F	H	P	S	T	Pole Size	Foundation
2 1/4" x 8'-0"	1'-10"	1'-3 1/2"	2 3/4"	4 3/4"	1'-11"	2 1/2"	1'-3" x 30' 1'-5" x 36'	3'-0" x 12'

INDIANA DEPARTMENT OF TRANSPORTATION

STEEL SIGNAL STRAIN POLE
FOUNDATION DETAILS

SEPTEMBER 2017

STANDARD DRAWING NO. E 805-SGSC-02

DAVID H. BORUFF REGISTERED No. 60900348 STATE OF INDIANA PROFESSIONAL ENGINEER

/s/ David H. Boruff 06/23/16
DESIGN STANDARDS ENGINEER DATE

/s/ Mark A. Miller 06/29/16
CHIEF ENGINEER DATE

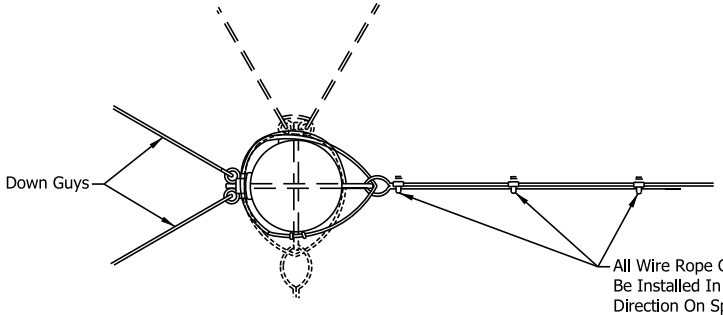

TOP VIEW

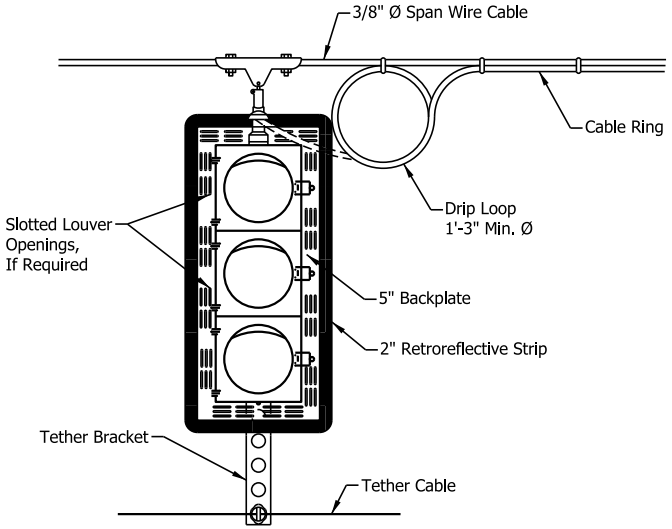

SPAN-HEAD ATTACHMENT

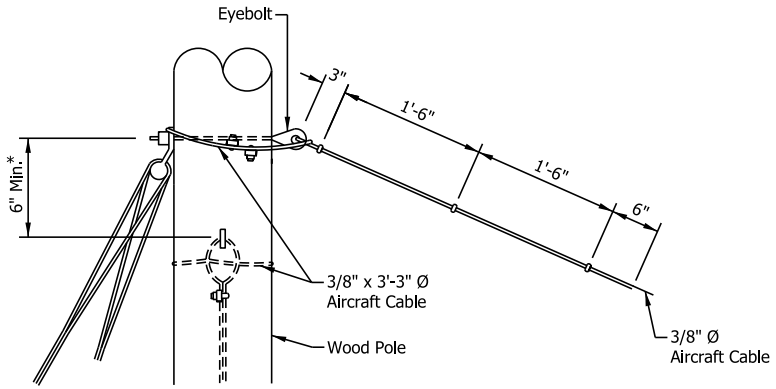

SAFETY CABLE AND EYE BOLT DETAIL

* If more than one catenary is attached to pole.

NOTES:

1. Installaion is the same for steel strain poles except pole bands will be used.
2. Aircraft cable shall use a heavy closed wire rope thimble at contact with pole bands.

INDIANA DEPARTMENT OF TRANSPORTATION

CABLE SPAN ATTACHMENT

SEPTEMBER 2017

STANDARD DRAWING NO. E 805-SGSC-03

DAVID H. BORUFF REGISTERED No. 60900348 STATE OF INDIANA PROFESSIONAL ENGINEER

/s/ David H. Boruff 06/23/16
DESIGN STANDARDS ENGINEER DATE

/s/ Mark A. Miller 06/29/16
CHIEF ENGINEER DATE

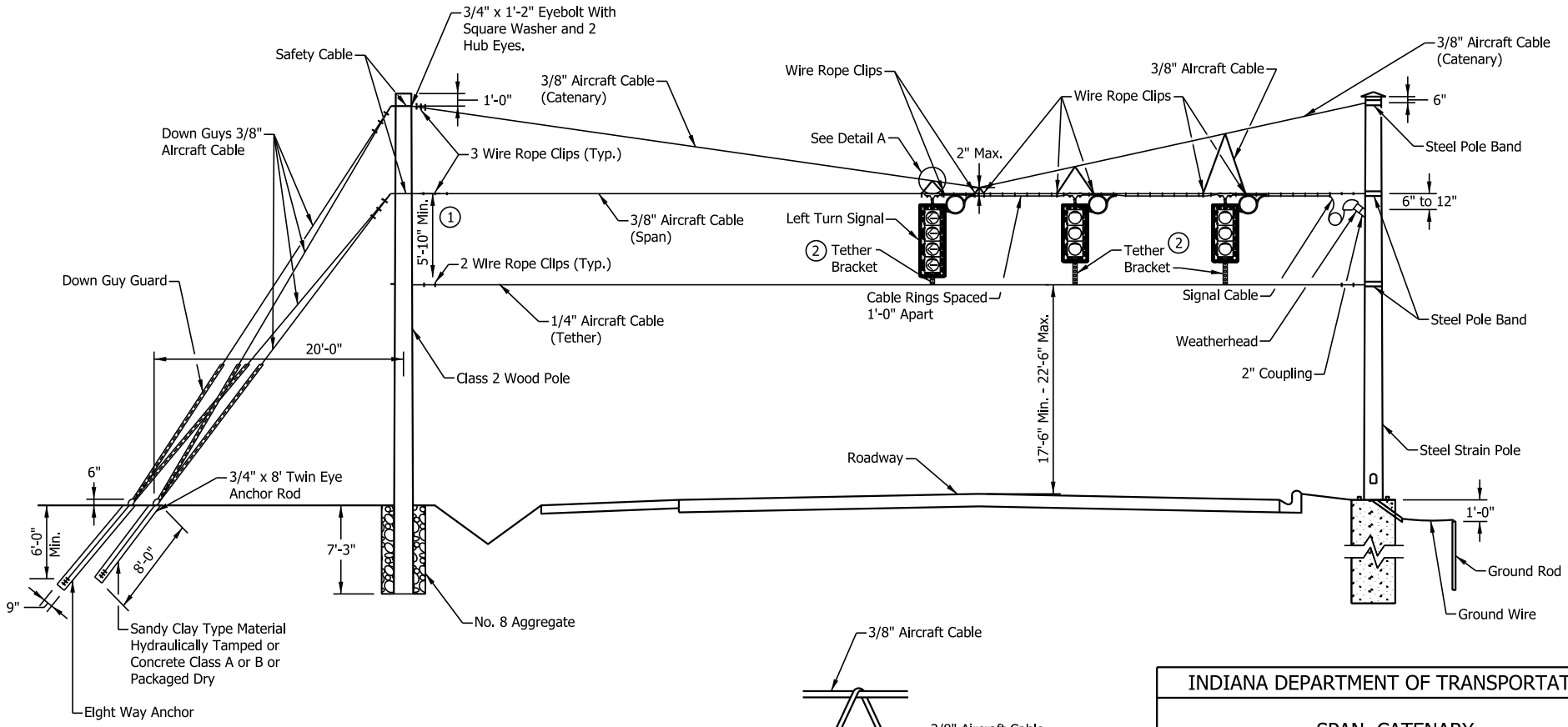

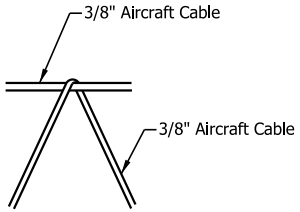

DETAIL A

NOTES:

1. With a 3-Section Left Turn Signal, the minimum distance shall be 4'-10".
2. The tether bracket shall provide a 2 in. minimum space between the signal backplate and tether and shall be secured by a wire rope clamp or tether plate.

INDIANA DEPARTMENT OF TRANSPORTATION

SPAN, CATENARY & TETHER DETAIL

SEPTEMBER 2017

STANDARD DRAWING NO. E 805-SGSC-04

DAVID H. BORUFF REGISTERED No. 60900348 STATE OF INDIANA PROFESSIONAL ENGINEER

/s/ David H. Boruff 06/23/16
DESIGN STANDARDS ENGINEER DATE

/s/ Mark A. Miller 06/29/16
CHIEF ENGINEER DATE

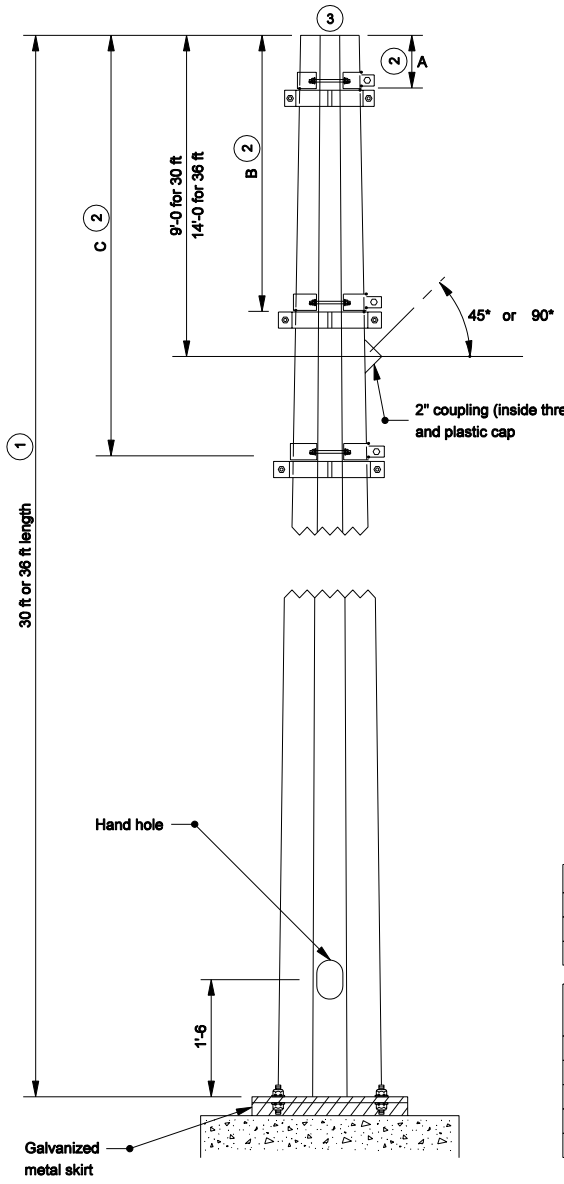

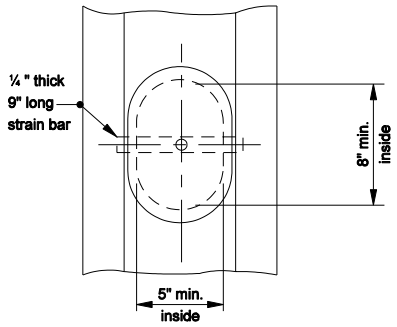

HANDHOLE AND GROUNDING LUG

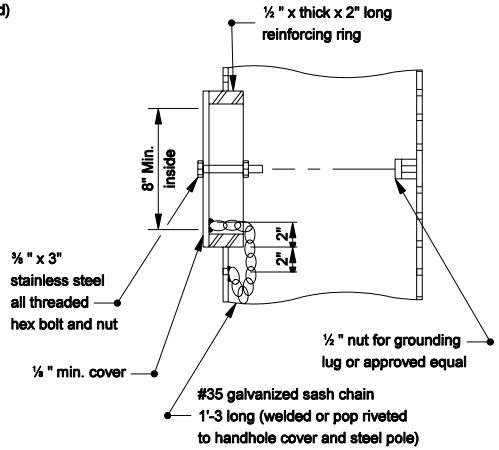

GENERAL NOTES:

1. Taper pole 0.14 in. per foot of length.
2. Band position can be variable depending of minimum clearance requirement of tether the cable over the road, and the elevation of the top of the foundation relative to the top of the traveled roadway.
3. Design load of 8000 lb applied perpendicular to pole axis 1'-6 from top of pole.

POLE BAND POSITION			
POLE LENGTH	A	B	C
30 ft	6"	8'-0	12'-0
36 ft	1'-0	13'-0	17'-0

POLE BAND SIZE NUMBER	O.D.(ACROSS POINTS) OF POLE (ROUND OR MULTISIDED)	
	MIN.	MAX.
12	11	1'-1
13	1'-1	1'-2
14	1'-2	1'-3
15	1'-3	1'-4

INDIANA DEPARTMENT OF TRANSPORTATION

30 ft. AND 36 ft. SIGNAL STEEL STRAIN POLES

SEPTEMBER 2005

STANDARD DRAWING NO. E 805-SGSP-01

RICHARD L. VanCLEAVE REGISTERED No. 9750 STATE OF INDIANA PROFESSIONAL ENGINEER

DESIGN STANDARDS ENGINEER

/s/ Richard L. VanCleave 9-01-05
DESIGN STANDARDS ENGINEER DATE

/s/ Richard K. Smutzer 9-01-05
CHIEF HIGHWAY ENGINEER DATE

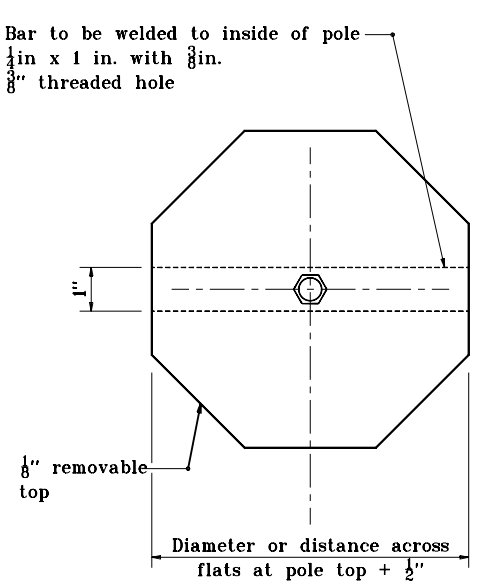

TOP COVER

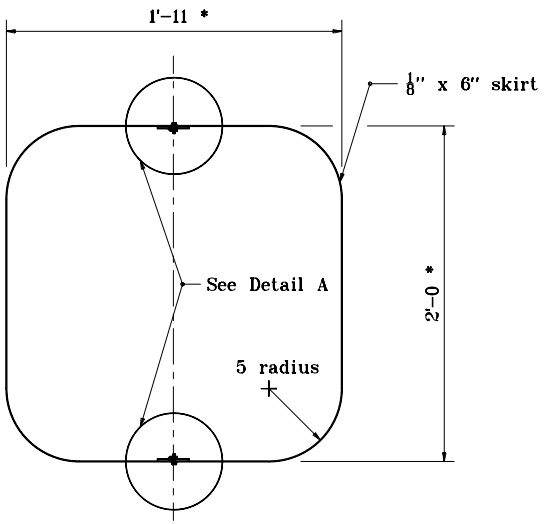

METAL SKIRT (BASE PLATE)

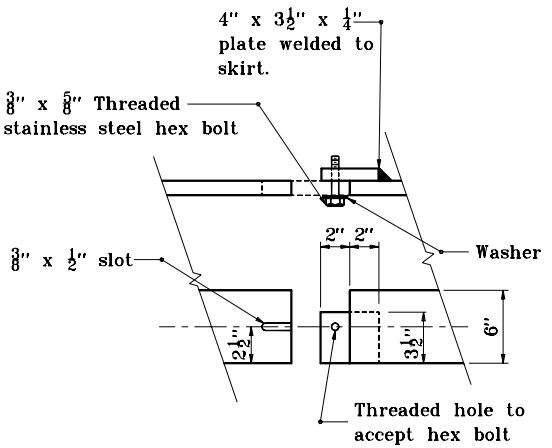

DETAIL A

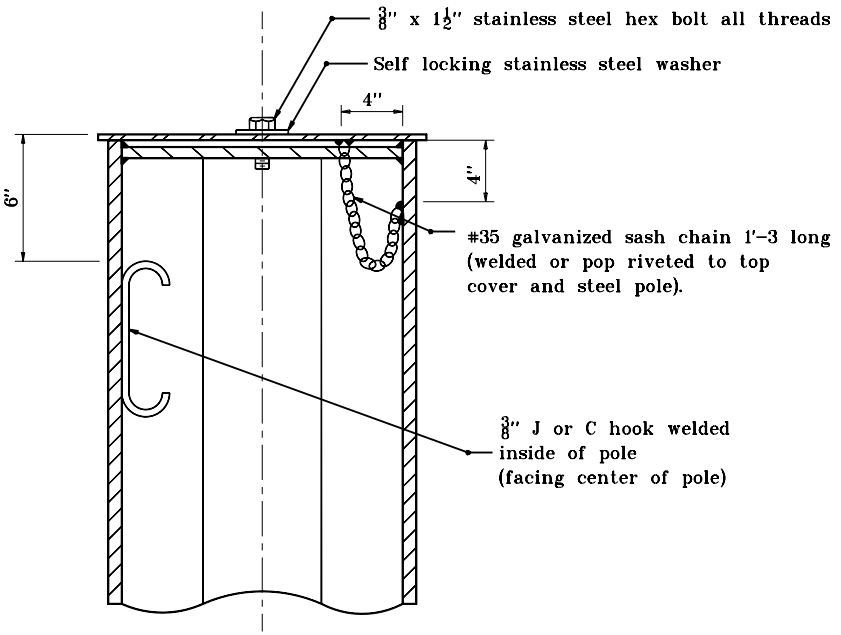

INDIANA DEPARTMENT OF TRANSPORTATION

TOP COVER AND METAL SKIRT OF SIGNAL STEEL STRAIN POLE

MARCH 1995

STANDARD DRAWING NO. **E 805-SGSP-02**

ANTHONY L. UREMOVICH REGISTERED No. 18095 STATE OF INDIANA PROFESSIONAL ENGINEER

DESIGN STANDARDS ENGINEER

DETAILS PLACED IN THIS FORMAT	11-15-99
/s/ Anthony L. Uremovich DESIGN STANDARDS ENGINEER	11-15-99 DATE
/s/ Firooz Zandi CHIEF HIGHWAY ENGINEER	11-15-99 DATE
ORIGINALLY APPROVED	3-01-95

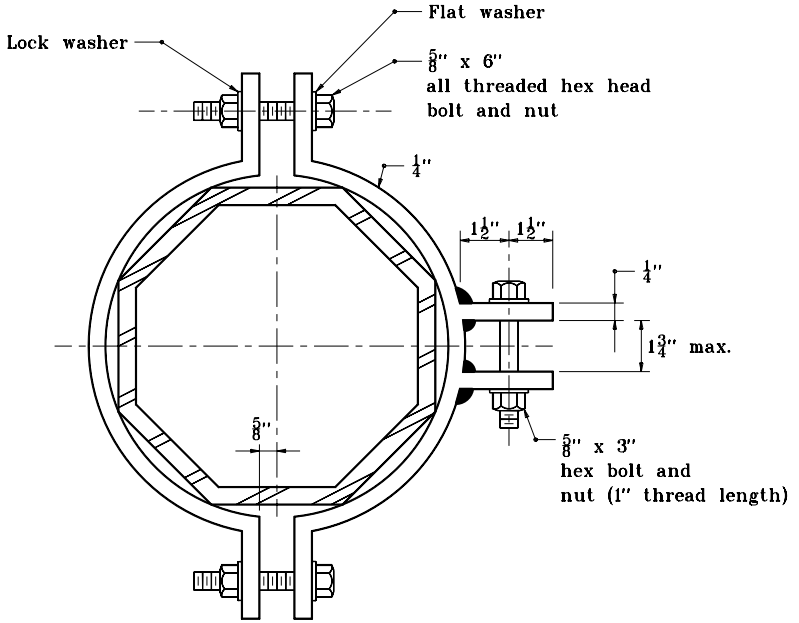

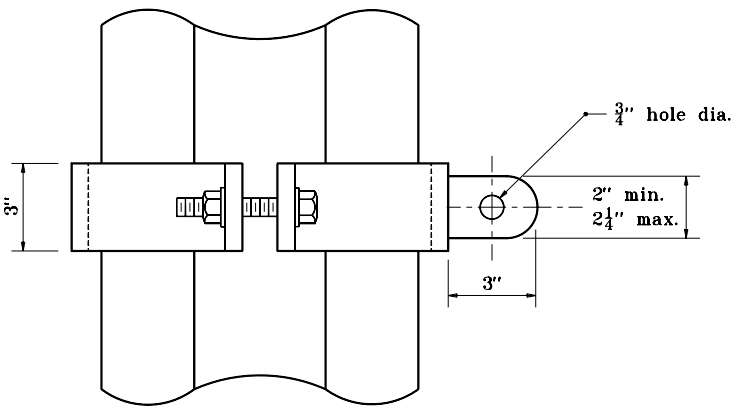

REQUIRES TWO POLE BANDS AT EACH POSITION ON POLE (SIX BANDS PER POLE)

INDIANA DEPARTMENT OF TRANSPORTATION

POLE BAND FOR SIGNAL STEEL STRAIN POLE

SEPTEMBER 1998

STANDARD DRAWING NO. **E 805-SGSP-03**

ANTHONY L. UREMOVICH REGISTERED No. 18095 STATE OF INDIANA PROFESSIONAL ENGINEER

DESIGN STANDARDS ENGINEER

DETAILS PLACED IN THIS FORMAT 11-15-99

/s/ Anthony L. Uremovich 11-15-99
DESIGN STANDARDS ENGINEER DATE

/s/ Firooz Zandi 11-15-99
CHIEF HIGHWAY ENGINEER DATE

ORIGINALLY APPROVED 9-01-98

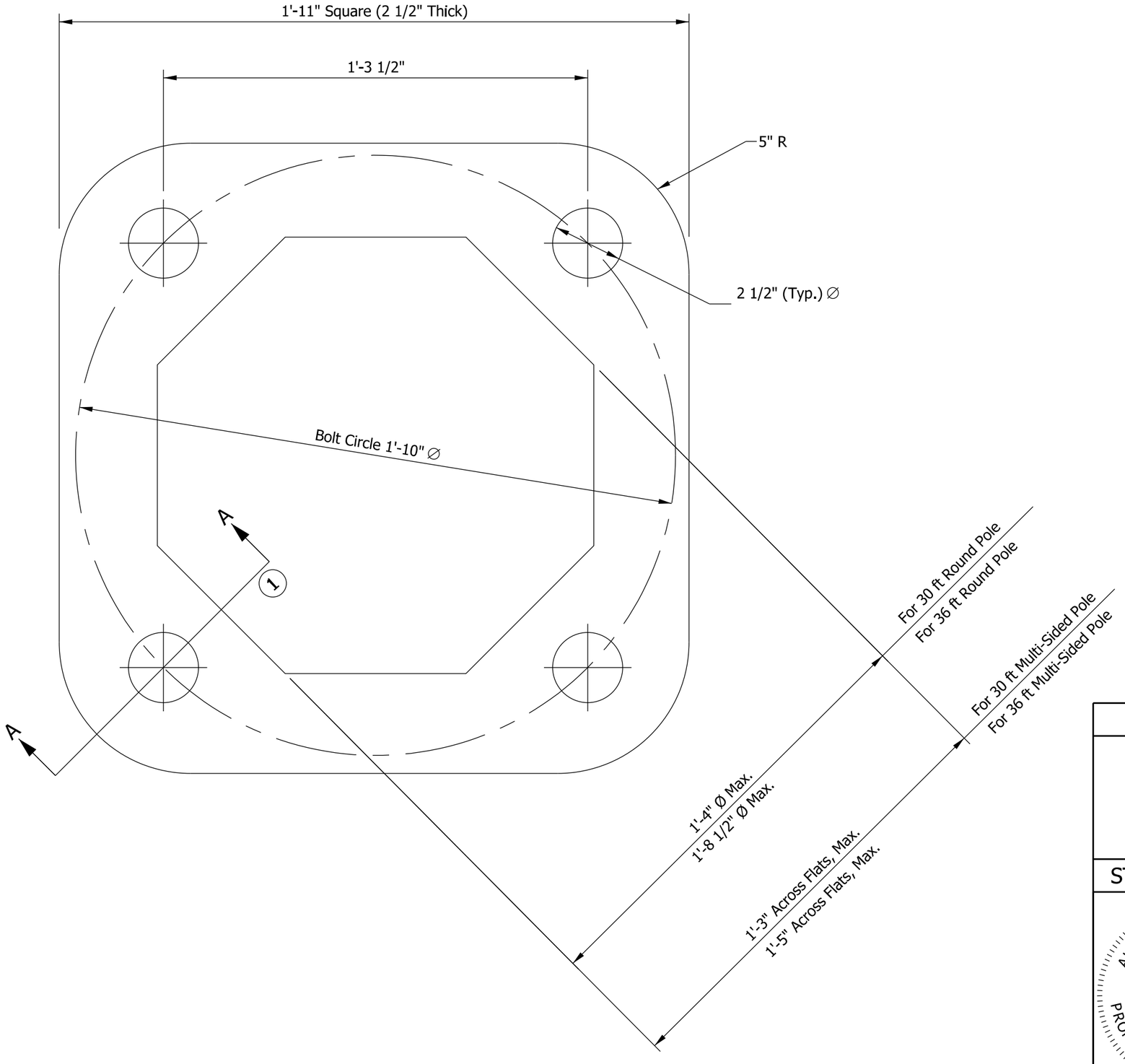

NOTES:

(1) See Standard Drawing E 805-SGSP-05 for Section A-A.

INDIANA DEPARTMENT OF TRANSPORTATION

SIGNAL STEEL STRAIN POLE
BASE PLATE

SEPTEMBER 2013

STANDARD DRAWING NO. E 805-SGSP-04

ALFREDO B. HANZA
REGISTERED
No.
60020657
STATE OF
INDIANA
PROFESSIONAL ENGINEER

/s/ Alfredo B. Hanza 02/05/13
DESIGN STANDARDS ENGINEER DATE

/s/ Mark A. Miller 03/27/13
CHIEF ENGINEER DATE

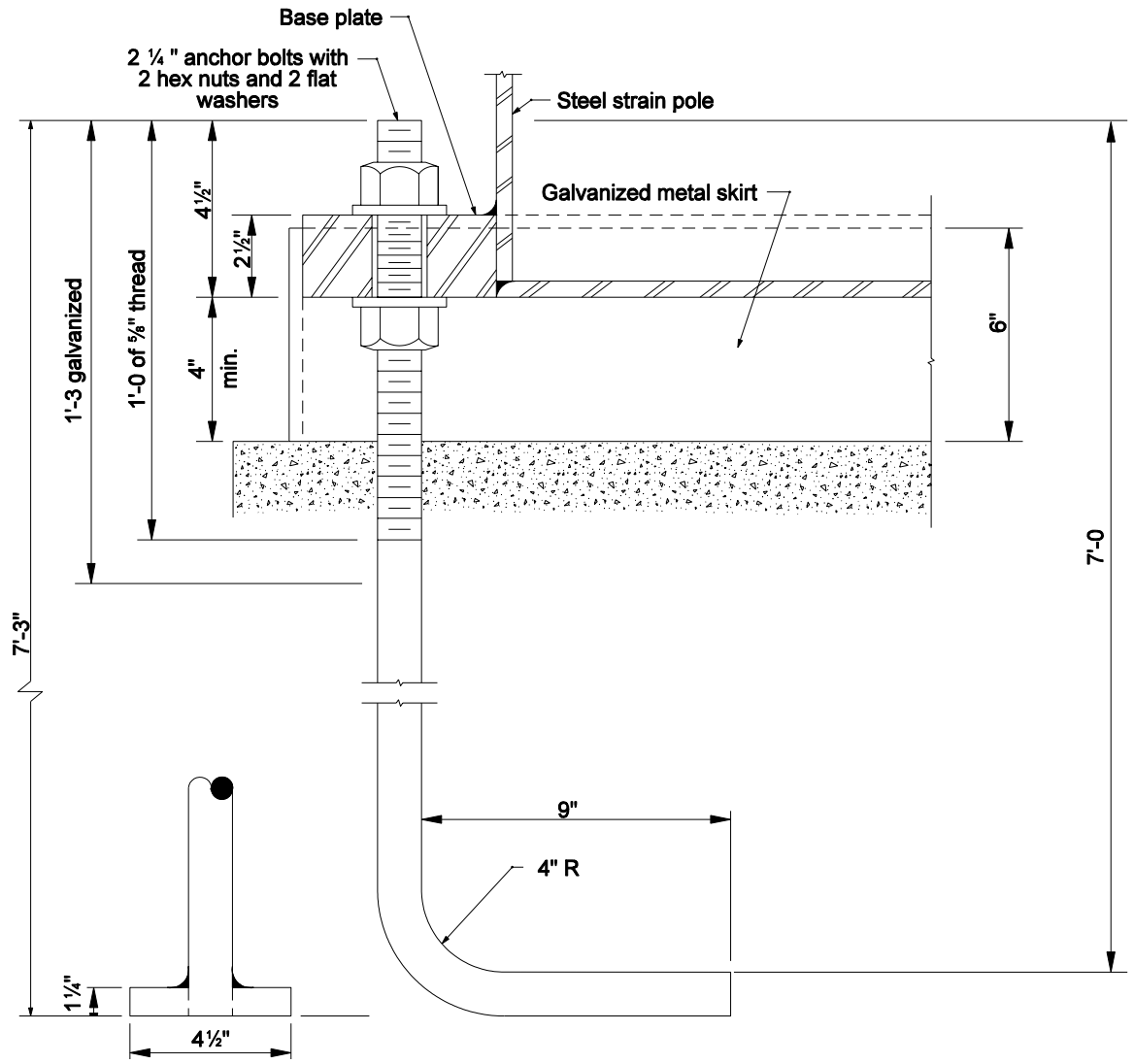

ALTERNATIVE
1¼" x 4½" square plate tapped & welded to anchor bolt

SECTION A-S

INDIANA DEPARTMENT OF TRANSPORTATION

ANCHOR BOLT DETAIL FOR SIGNAL STEEL STRAIN POLES

MARCH 2004

STANDARD DRAWING NO. E 805-SGSP-05

RICHARD L. VanCLEAVE REGISTERED No. 9750 STATE OF INDIANA PROFESSIONAL ENGINEER

DESIGN STANDARDS ENGINEER

/s/ Richard L. VanCleave 3/01/04
DESIGN STANDARDS ENGINEER DATE

/s/ Richard K. Smutzer 3/01/04
CHIEF HIGHWAY ENGINEER DATE

INDEX	
SHEET NO.	SUBJECT
1	Drawing Index
2	Single Signal Arm Pole Elevation, Dimensions, and Base Plate Weld Detail
3	Signal Arm Dimensions & Details
4	Signal Arm Pole Base Plate, Bottom Splice Plates, and Pole Top Cover Details
5	Signal Arm Connection Details
6	Handhole Details
7	Placement of Signals and Signs, Loading for Arm of 35' or Less
8	Placement of Signals and Signs, Loading for Arm of Greater Than 35' to 60'
9	Combination Pole Elevation, Dimensions, and Base Plate Weld Detail
10	Combination Arm Dimensions & Details
11	Combination Arm Connection Details
12	Combination Pole Splice Details for Arms 35' or Less
13	Combination Pole Splice Details for Arm of Greater Than 35' to 60'
14	Combination Arm Loading for Arm of 35' or Less
15	Combination Arm Loading for Arm of Greater Than 35' to 60'
16	Drilled Shaft Foundation Type A for Arm of 35' or Less
17	Drilled Shaft Foundation Type B for Arm of Greater Than 35' to 60'
18	Spread Footing Foundation Type C for Arm of 35' or Less
19	Spread Footing Foundation Type D for Arm of Greater Than 35' to 60'

INDIANA DEPARTMENT OF TRANSPORTATION

TRAFFIC SIGNAL CANTILEVER STRUCTURE
DRAWING INDEX

SEPTEMBER 2013

STANDARD DRAWING NO. E 805-TSCS-01

ALFREDO B. HANZA
REGISTERED
No.
60020657
STATE OF
INDIANA
PROFESSIONAL ENGINEER

/s/ Alfredo B. Hanza 02/05/13
DESIGN STANDARDS ENGINEER DATE

/s/ Mark A. Miller 03/27/13
CHIEF ENGINEER DATE

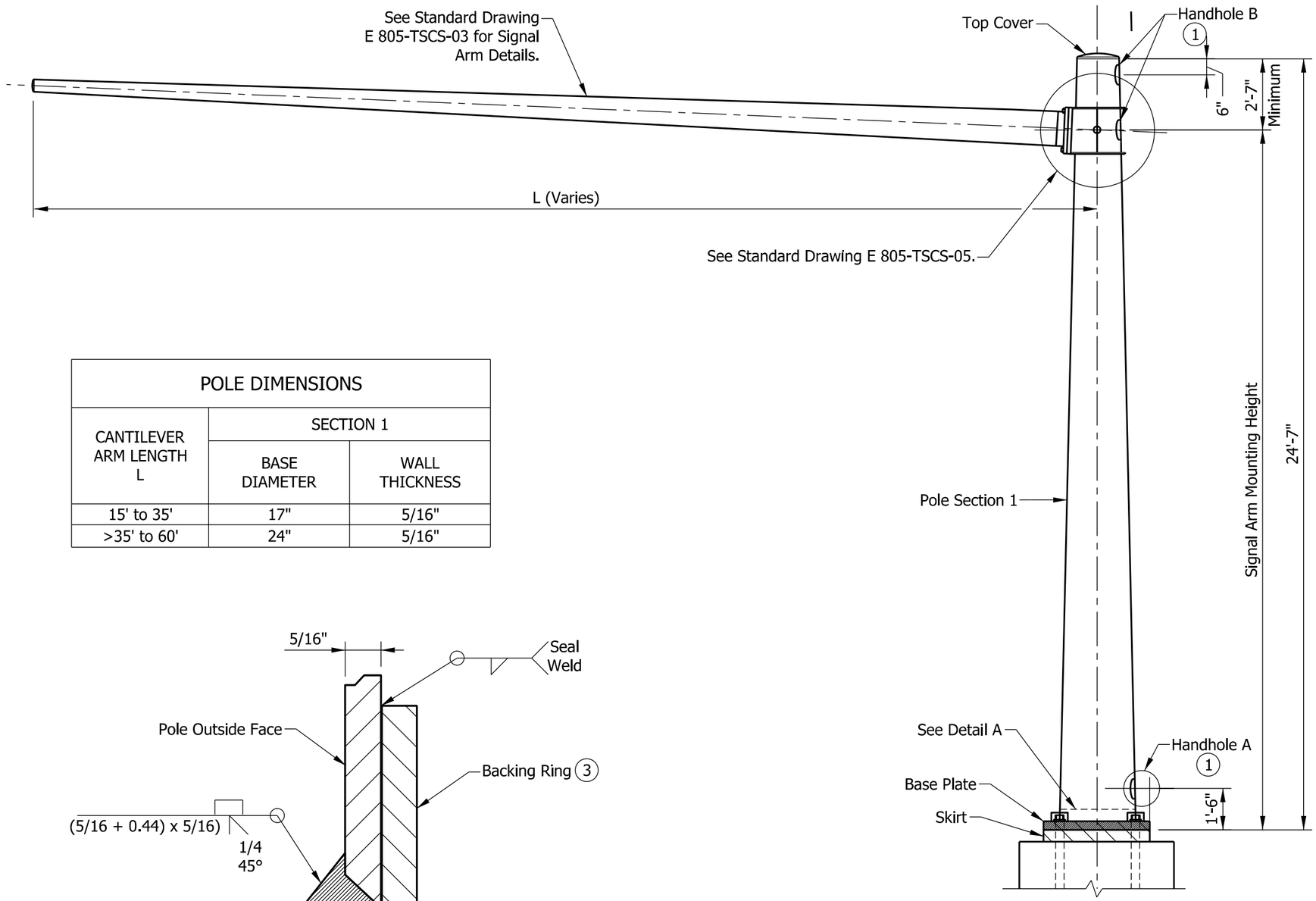

POLE ELEVATION

POLE DIMENSIONS		
CANTILEVER ARM LENGTH L	SECTION 1	
	BASE DIAMETER	WALL THICKNESS
15' to 35'	17"	5/16"
>35' to 60'	24"	5/16"

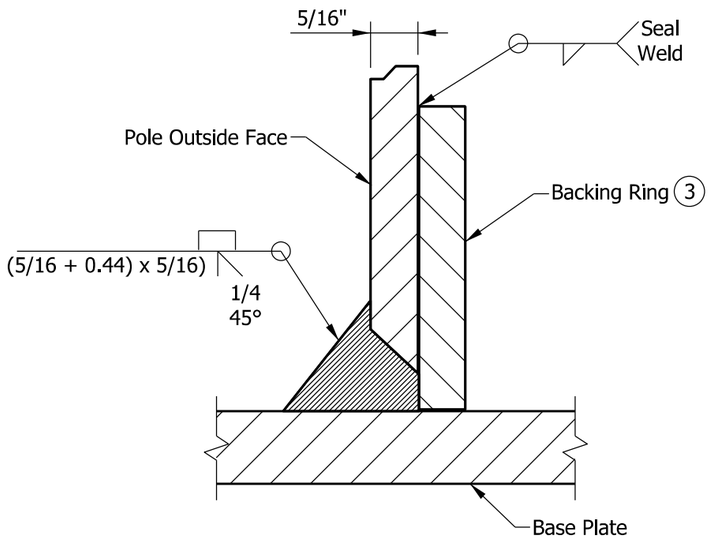

POLE/BASE PLATE WELD
DETAIL A

NOTES:

1. See Standard Drawing E 805-TSCS-06 for handhole details.
2. See Standard Drawing E 805-SGGR-01 to -03 for grounding details.
3. Use continuous backing ring, 5/16" x 2" minimum. Tack weld only in root area of final weld.

INDIANA DEPARTMENT OF TRANSPORTATION

TRAFFIC SIGNAL CANTILEVER STRUCTURE
SINGLE SIGNAL ARM POLE ELEVATION,
DIMENSIONS, AND BASE PLATE WELD DETAIL
SEPTEMBER 2018

STANDARD DRAWING NO. E 805-TSCS-02

DAVID H. BORUFF
REGISTERED
No. 60900348
STATE OF INDIANA
PROFESSIONAL ENGINEER

/s/ David H. Boruff 03/12/18
DESIGN STANDARDS ENGINEER DATE

/s/ John Leckie 05/03/18
CHIEF ENGINEER DATE

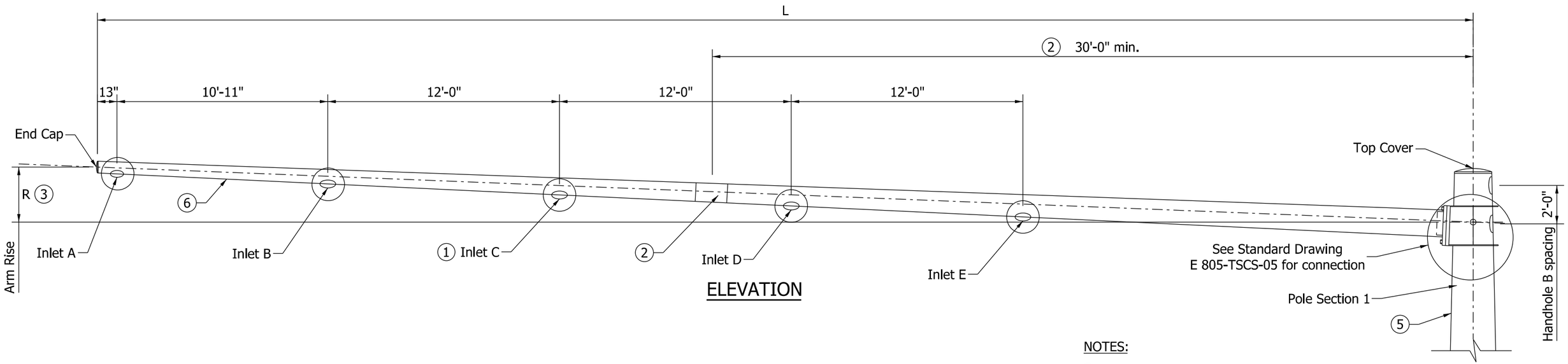

ELEVATION

NOTES:

1. Number of cable inlets depends on arm L (See Arm Dimensions Table). The inlet diameter shall be 1 3/4" with rubber grommet (Typ.)
2. Optional splice can be used for arm length of greater than 40'. Field assembly shall achieve a snug tight joint, with minimum overlap not less than 1.5 times the inside dimension of the end section.
3. Arm rise R is measured in the undeflected position without vertical loads on the arm.
4. See Standard Drawings E 805-TSCS-07 and -08 for placement of signal and signs for each arm length.
5. If seam welds are used, the weld location for the arms shall be along the bottom, and on the side of pole as shown.

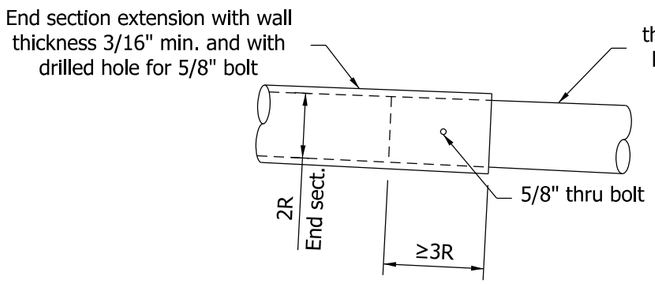

2 OPTIONAL ARM SPLICE DETAIL

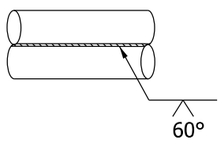

5 TYPICAL SEAM WELD

ARM DIMENSIONS TABLE				
L (ft.)	ARM DIAMETER AT POLE	ARM WALL THICKNESS (in.)	R (in.)	CABLE INLETS
15	8"	5/16"	7 1/2"	A, B
20	10"	5/16"	10"	A, B
25	11"	5/16"	1'-0 1/2"	A, B
30	13"	5/16"	1'-3"	A, B
35	14"	5/16"	1'-5 1/2"	A, B, C
40	15"	5/16"	1'-8"	A, B, C
45	17"	5/16"	1'-10 1/2"	A, B, C
50	19"	5/16"	2'-1"	A, B, C, D
55	20"	5/16"	2'-3 1/2"	A, B, C, D
60	21"	5/16"	2'-6"	A, B, C, D, E

INDIANA DEPARTMENT OF TRANSPORTATION

TRAFFIC SIGNAL CANTILEVER STRUCTURE SIGNAL ARM DIMENSIONS & DETAILS

SEPTEMBER 2013

STANDARD DRAWING NO. E 805-TSCS-03

ALFREDO B. HANZA REGISTERED No. 60020657 STATE OF INDIANA PROFESSIONAL ENGINEER

/s/ Alfredo B. Hanza 02/05/13
DESIGN STANDARDS ENGINEER DATE

/s/ Mark A. Miller 03/27/13
CHIEF ENGINEER DATE

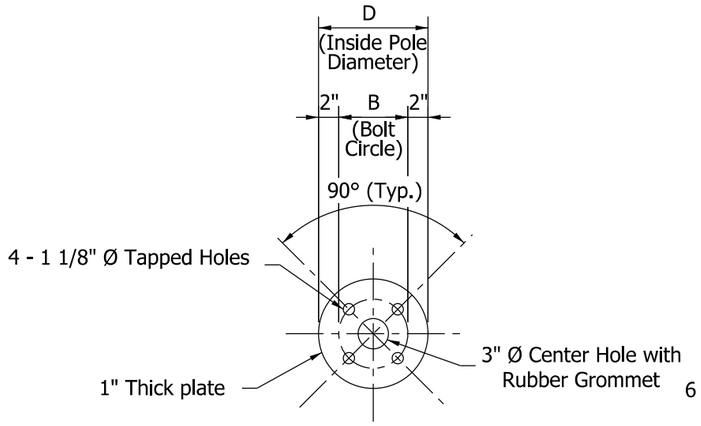

① BOTTOM SPLICE PLATE

(For Cantilever Arm Length of 35' or Less)

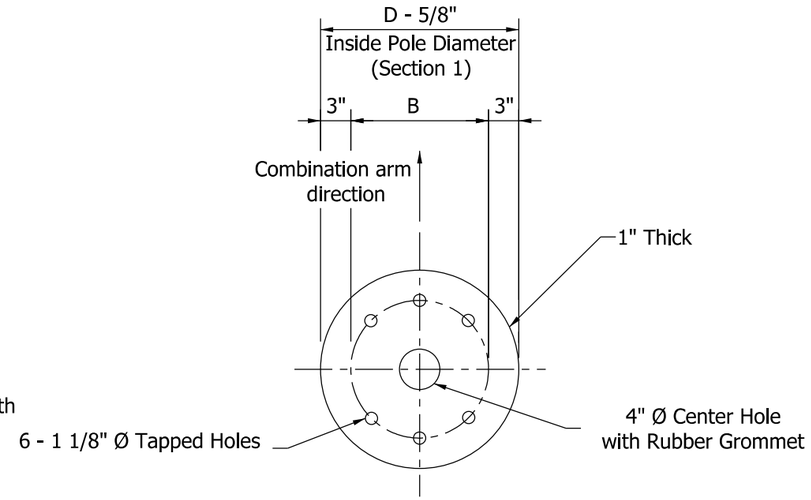

① BOTTOM SPLICE PLATE

(For Cantilever Arm Length Greater Than 35' to 60')

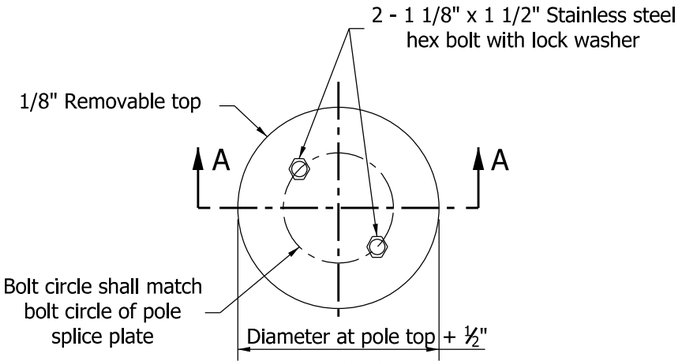

POLE TOP COVER

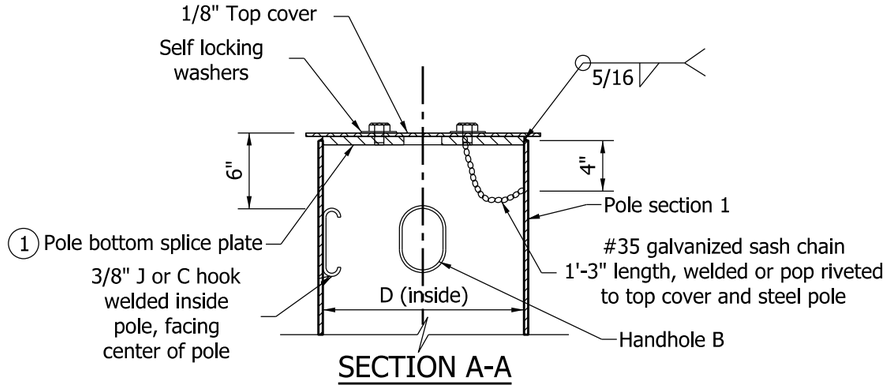

SECTION A-A

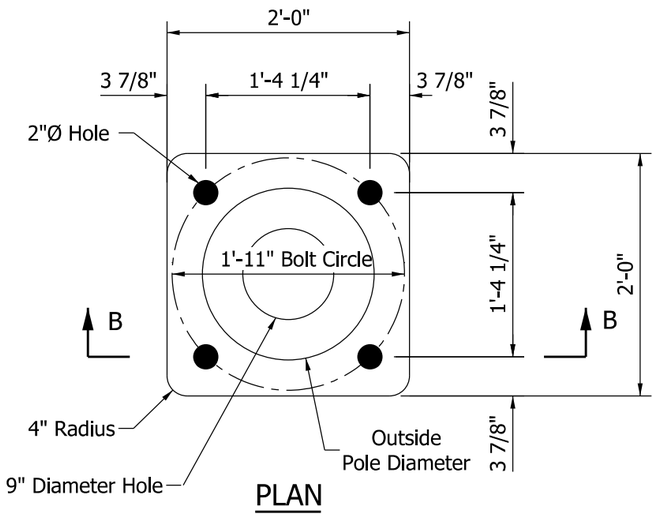

PLAN

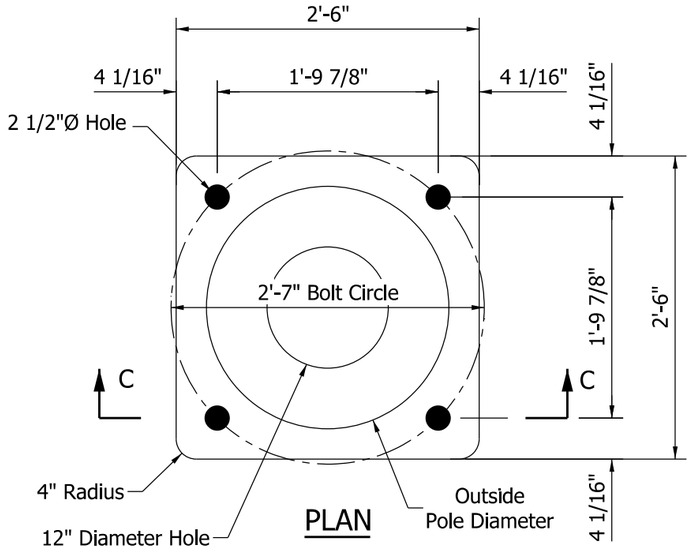

PLAN

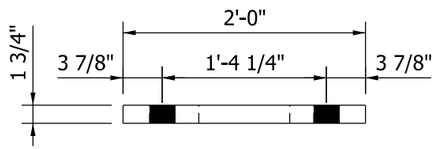

SECTION B-B

BASE PLATE A

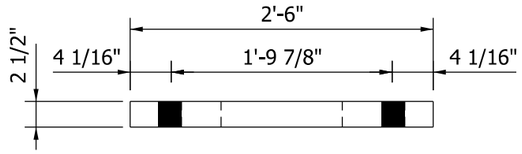

SECTION C-C

BASE PLATE B

NOTES:

① See Standard Drawings E 805-TSCS-12 and -13 for bottom splice details.

2. Bolt circle shall allow clearance for the plate washer. Cutting or trimming the washer will not be allowed.

INDIANA DEPARTMENT OF TRANSPORTATION

TRAFFIC SIGNAL CANTILEVER STRUCTURE SIGNAL ARM POLE BASE PLATE, BOTTOM SPLICE PLATES, AND POLE TOP COVER DETAILS

SEPTEMBER 2013

STANDARD DRAWING NO. E 805-TSCS-04

ALFREDO B. HANZA REGISTERED No. 60020657 STATE OF INDIANA PROFESSIONAL ENGINEER

/s/ Alfredo B. Hanza 03/26/13

DESIGN STANDARDS ENGINEER DATE

/s/ Mark A. Miller 03/27/13

CHIEF ENGINEER DATE

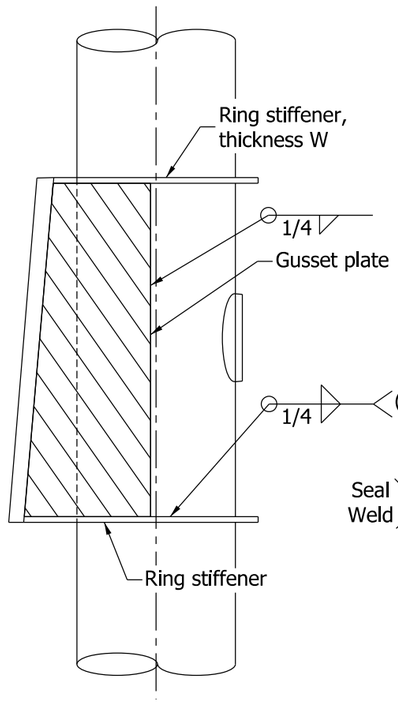

ELEVATION OF GUSSET PLATE

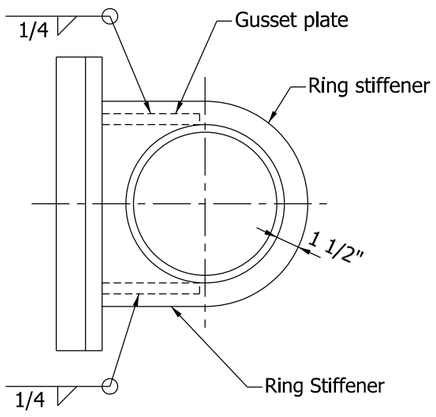

TOP OF GUSSET PLATE

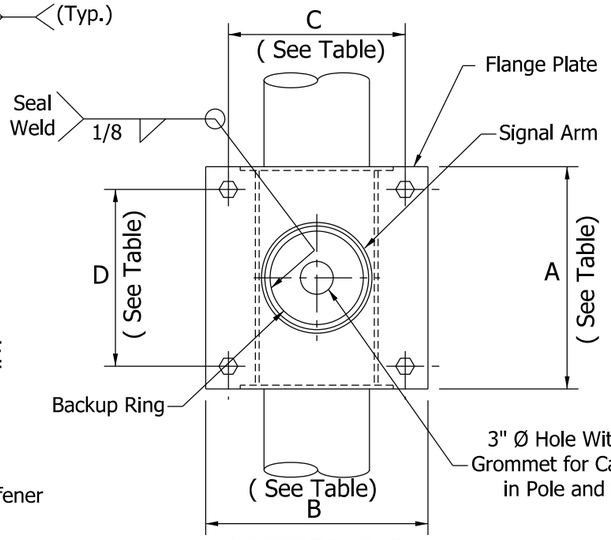

SECTION D-D

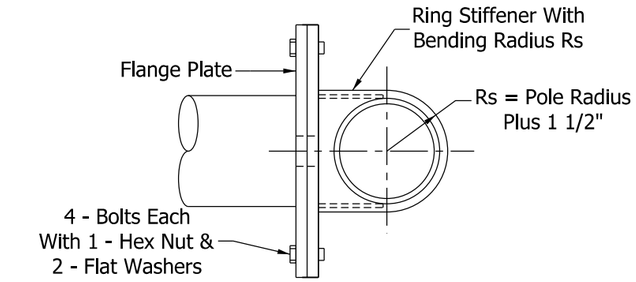

SECTION E-E

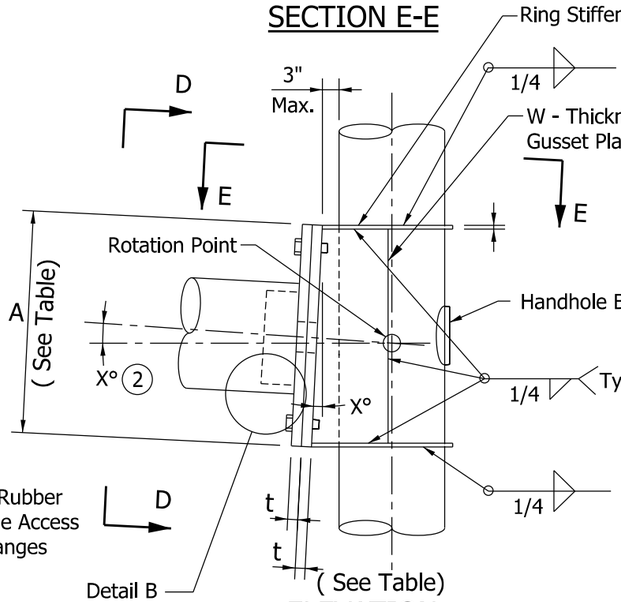

ELEVATION

SIGNAL ARM CONNECTION DETAIL

NOTES:

1. See Standard Drawing E 805-TSCS-06 for Handhole B details.
2. The required signal arm rise shall be built into the gusset plate at the angle X. The angle X is described as arc tan R/L, where R is the arm rise and L is the arm length. Both R and L vary and are listed in the Arm Dimension Table on Standard Drawing E 805-TSCS-03.
3. Use continuous backing ring, 5/16" x 2" minimum. Tack weld only in root area of final weld.

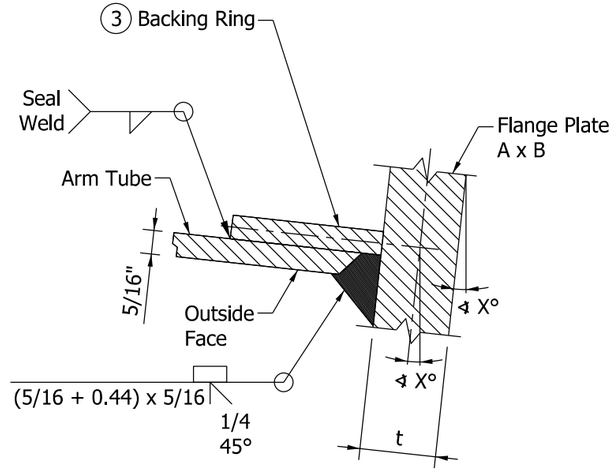

DETAIL B - ARM WELD

PLATES AND BOLTS FOR SIGNAL SINGLE ARM CANTILEVER					
ARM LENGTH	FLANGE PLATE A x B	BOLT PATTERN C x D	RING STIFFNER GUSSET PLATE W	FLANGE PLATE THICKNESS t	BOLT
15' to 35'	22" x 22"	17 1/2" x 17 1/2"	3/8"	1 1/2"	1 1/8" - 7 UNC x 4 1/4" Long
>35' to 60'	33" x 33"	27 1/2" x 27 1/2"	1/2"	1 3/4"	1 1/2" - 6 UNC x 6 1/4" Long

INDIANA DEPARTMENT OF TRANSPORTATION

TRAFFIC SIGNAL CANTILEVER STRUCTURE
SIGNAL ARM CONNECTION DETAILS

SEPTEMBER 2014

STANDARD DRAWING NO. E 805-TSCS-05

ALFREDO B. HANZA REGISTERED No. 60020657 STATE OF INDIANA PROFESSIONAL ENGINEER

/s/ Alfredo B. Hanza 12/02/13
DESIGN STANDARDS ENGINEER DATE

/s/ Mark A. Miller 12/05/13
CHIEF ENGINEER DATE

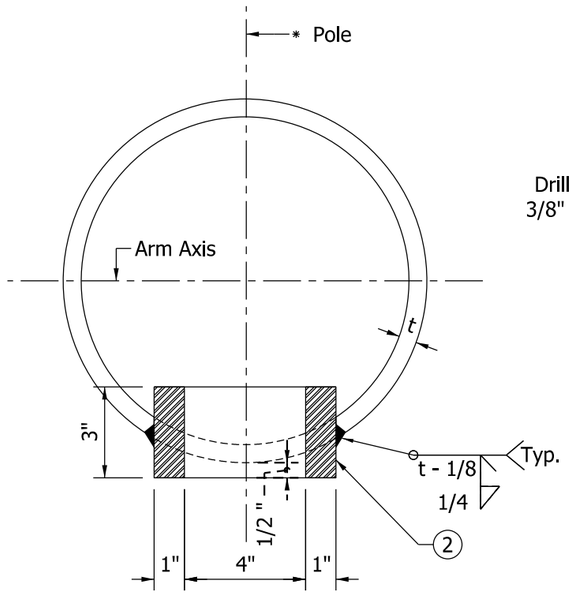

HANDHOLE B
SECTION ACROSS POLE

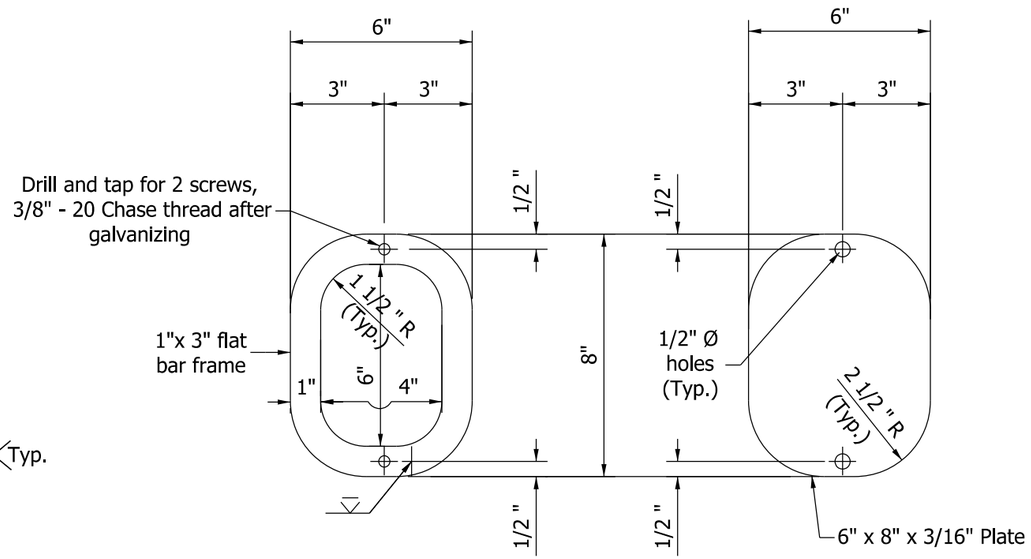

FRAME DETAIL COVER

HANDHOLE B

NOTES:

1 Handhole A shall be used at the base of the pole. Handhole B shall be used at all other locations.

(2) In lieu of fabricated handhole frame as shown, frame may be cut from 3" plate with rolling direction vertical.

3 See Standard Drawings E 805-TSCS-02 and -09 for handhole locations.

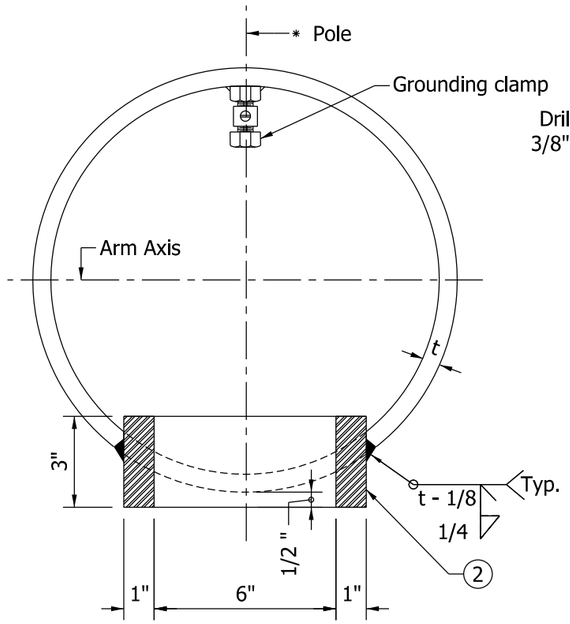

HANDHOLE A
SECTION ACROSS POLE

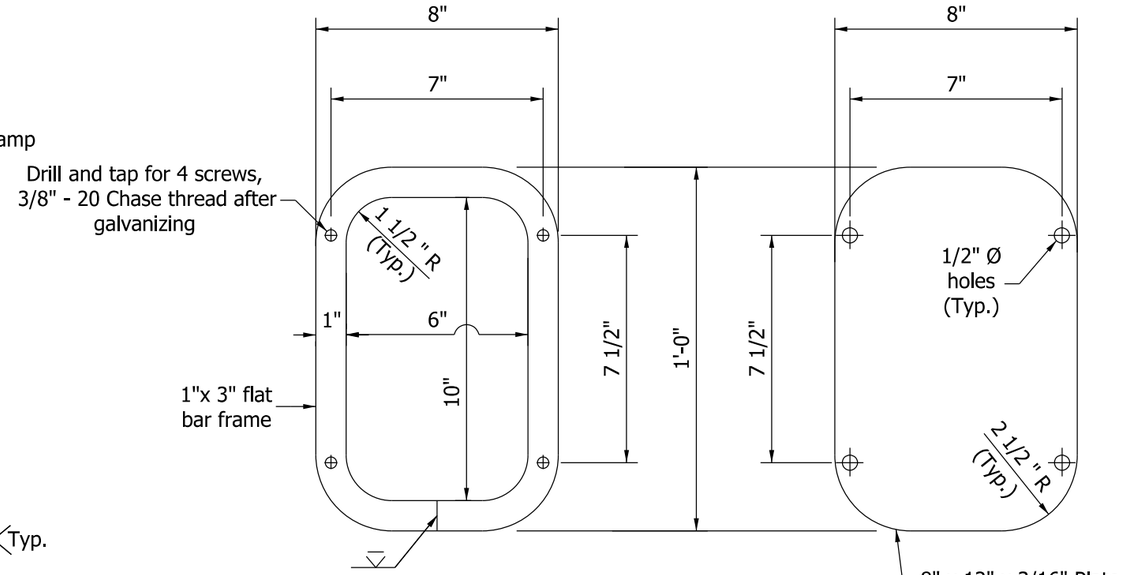

FRAME DETAIL COVER

HANDHOLE A

INDIANA DEPARTMENT OF TRANSPORTATION

TRAFFIC SIGNAL CANTILEVER STRUCTURE
HANDHOLE DETAILS

SEPTEMBER 2013

STANDARD DRAWING NO. E 805-TSCS-06

ALFREDO B. HANZA
REGISTERED
No. 60020657
STATE OF INDIANA
PROFESSIONAL ENGINEER

/s/ Alfredo B. Hanza 02/05/13
DESIGN STANDARDS ENGINEER DATE

/s/ Mark A. Miller 03/27/13
CHIEF ENGINEER DATE

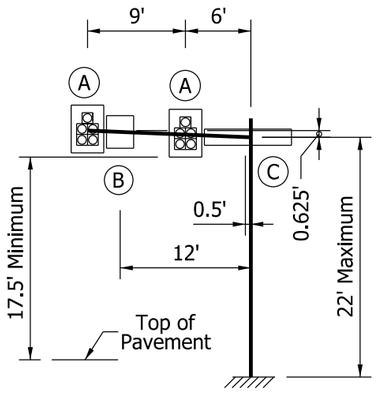

15' ARM

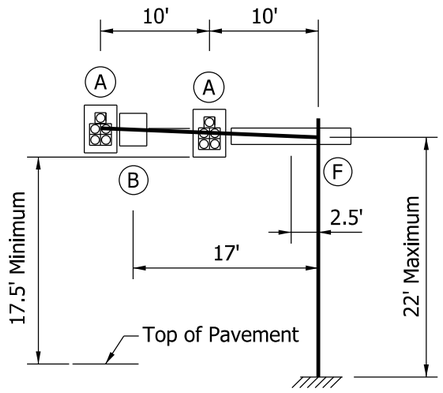

20' ARM

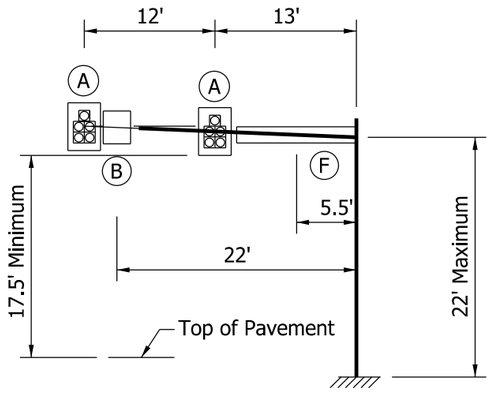

25' ARM

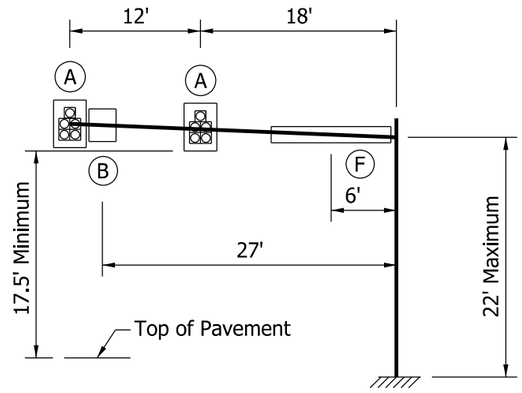

30' ARM

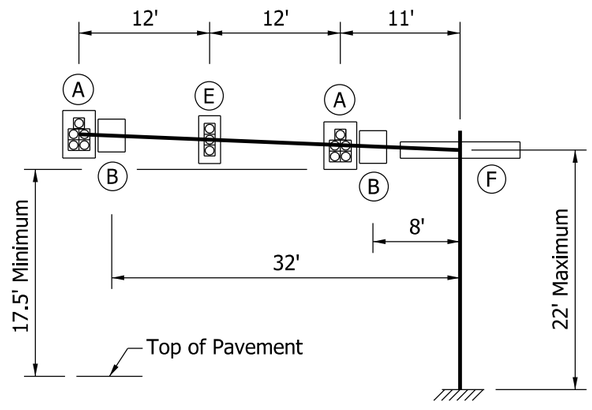

35' ARM

LEGEND	
Device	Description
(A)	12" - 5 Section Signal Head With Backplates
(B)	36" x 30" Regulatory Sign
(C)	18" x 96" Street Name Sign
(E)	12" - 3 Section Signal Head With Backplates
(F)	18" x 132" Street Name Sign

NOTE:

1. The structure arms and pole are designed for the above loading conditions. Foundation types A and C are designed for arms having length of 35 ft or less. See Standard Drawings E 805-TSCS-16 and -18 for foundation types A and C.

INDIANA DEPARTMENT OF TRANSPORTATION

TRAFFIC SIGNAL CANTILEVER STRUCTURE PLACEMENT OF SIGNALS AND SIGNS LOADING FOR ARM OF 35' OR LESS

SEPTEMBER 2013

STANDARD DRAWING NO. E 805-TSCS-07

ALFREDO B. HANZA
REGISTERED
No. 60020657
STATE OF INDIANA
PROFESSIONAL ENGINEER

/s/ Alfredo B. Hanza 02/05/13
DESIGN STANDARDS ENGINEER DATE

/s/ Mark A. Miller 03/27/13
CHIEF ENGINEER DATE

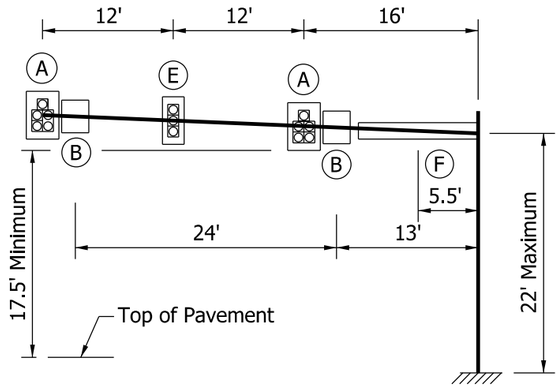

40' ARM

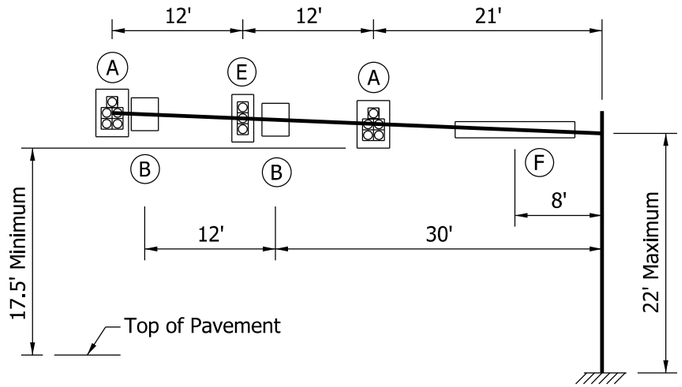

45' ARM

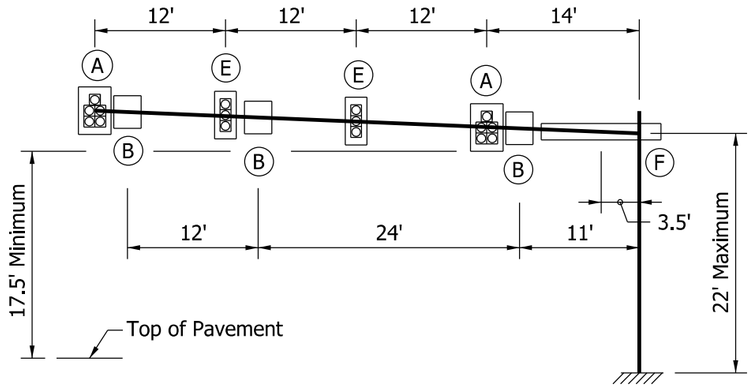

50' ARM

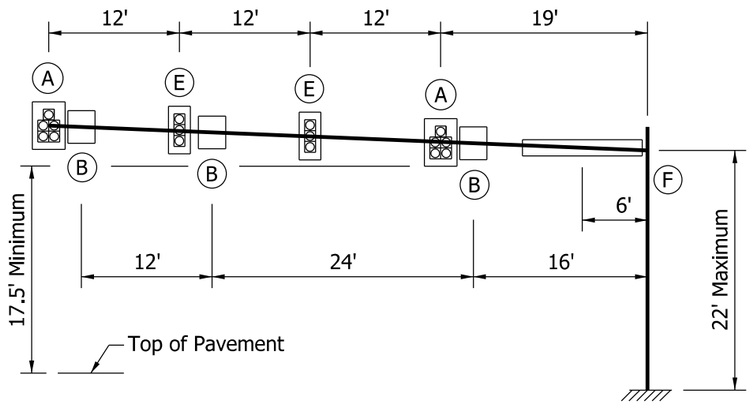

55' ARM

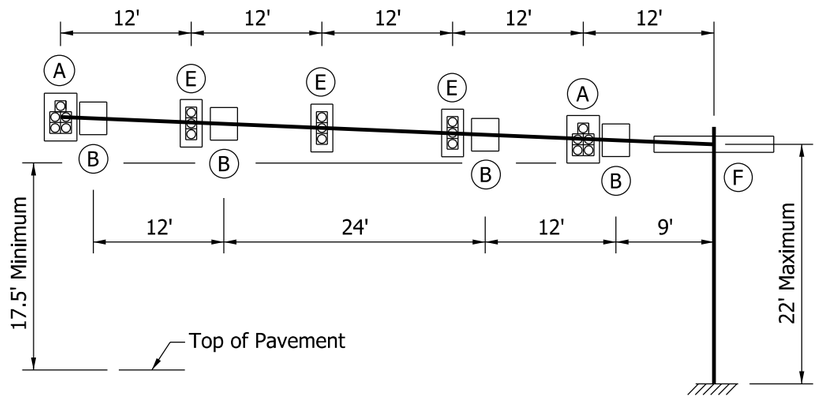

60' ARM

NOTES:

1. See Standard Drawing E 805-TSCS-07 for Legend.
2. The structure arms and pole are designed for the above loading conditions. Foundation types B and D are designed for arms having length of greater than 35 ft to 60 ft. See Standard Drawings E 805-TSCS-17 and -19 for foundation types B and D.

INDIANA DEPARTMENT OF TRANSPORTATION

TRAFFIC SIGNAL CANTILEVER STRUCTURE PLACEMENT OF SIGNALS AND SIGNS LOADING FOR ARM OF GREATER THAN 35' TO 60'

SEPTEMBER 2013

STANDARD DRAWING NO. E 805-TSCS-08

ALFREDO B. HANZA
REGISTERED
No. 60020657
STATE OF INDIANA
PROFESSIONAL ENGINEER

/s/ Alfredo B. Hanza	02/05/13
DESIGN STANDARDS ENGINEER	DATE
/s/ Mark A. Miller	03/27/13
CHIEF ENGINEER	DATE

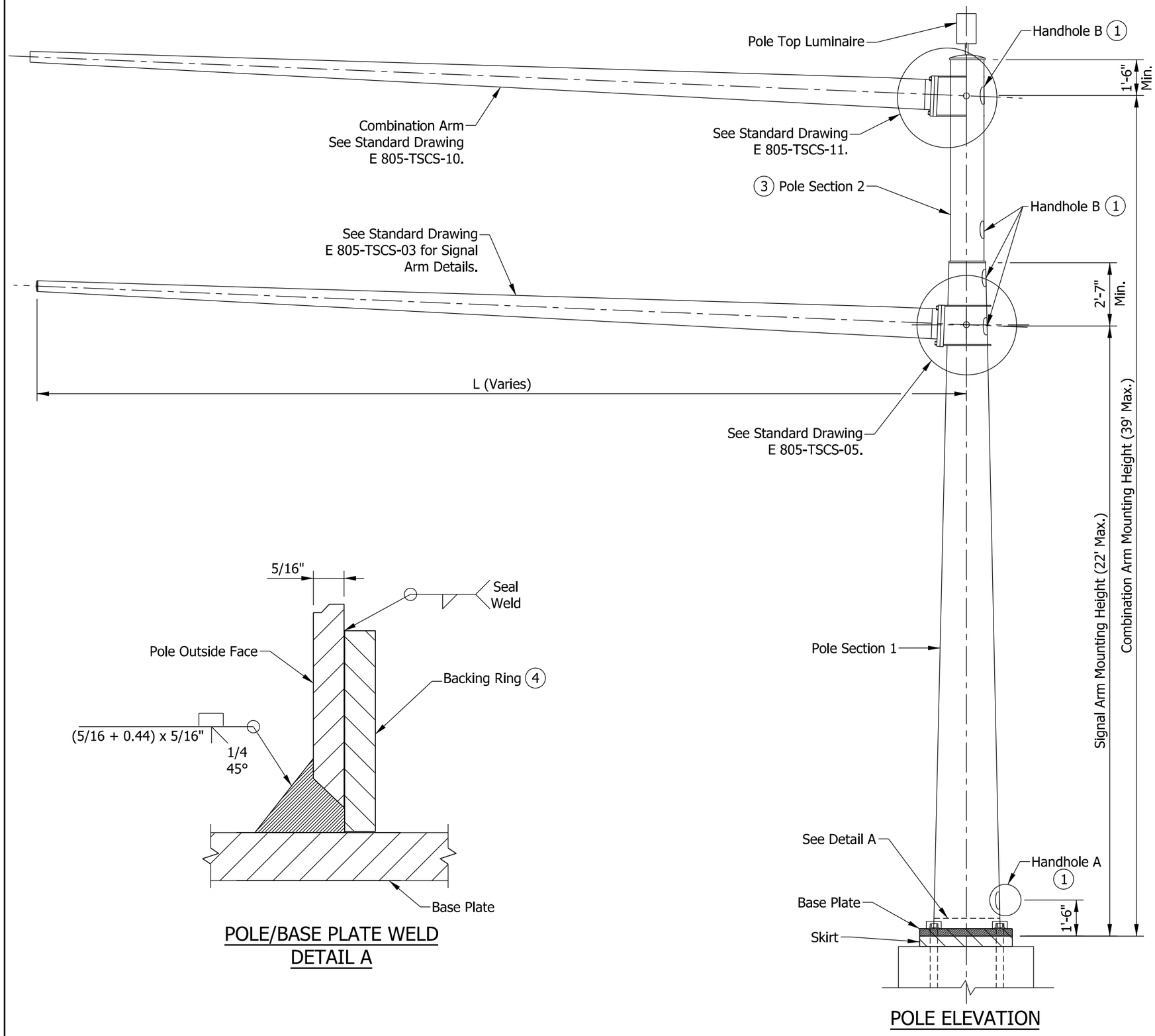

POLE ELEVATION

POLE/BASE PLATE WELD
DETAIL A

NOTES:

(1) See Standard Drawing E 805-TSCS-06 for handhole details.

2. See Standard Drawing E 805-SGGR-01 to -03 for grounding details.

(3) Base diameter of Pole Section 2 shall be equal to top diameter of Pole Section 1.

(4) Use continuous backing ring, 5/16" x 2" minimum. Tack weld only in root area of final weld.

VERTICAL CLEARANCE CRITERIA:

Maintain 40'-0" minimum clearance from top of pavement to the camera lens.

POLE DIMENSIONS

CANTILEVER ARM LENGTH L	POLE SECTION 1		POLE SECTION 2	
	BASE DIAMETER	WALL THICKNESS	BASE DIAMETER	WALL THICKNESS
15' to 35'	17"	5/16"	See Note (3)	1/8"
>35' to 60'	24"	5/16"	See Note (3)	1/8"

INDIANA DEPARTMENT OF TRANSPORTATION

TRAFFIC SIGNAL CANTILEVER STRUCTURE COMBINATION POLE ELEVATION, DIMENSIONS, AND BASE PLATE WELD DETAIL

SEPTEMBER 2014

STANDARD DRAWING NO. E 805-TSCS-09

ALFREDO B. HANZA
REGISTERED
No. 60020657
STATE OF INDIANA
PROFESSIONAL ENGINEER

/s/ Alfredo B. Hanza — 12/02/13
DESIGN STANDARDS ENGINEER — DATE

/s/ Mark A. Miller — 12/05/13
CHIEF ENGINEER — DATE

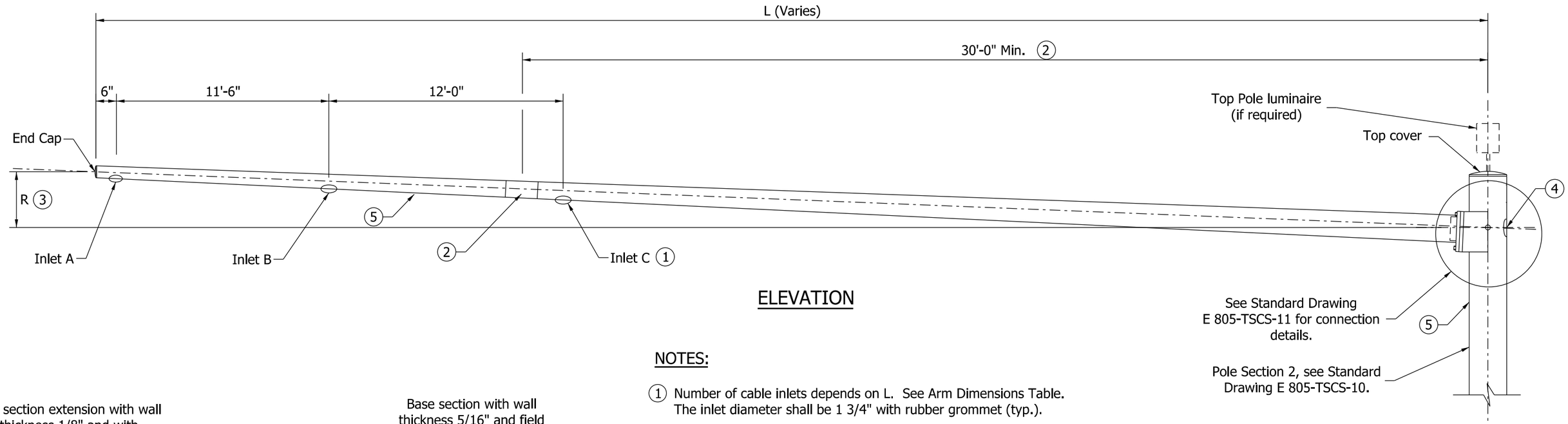

ELEVATION

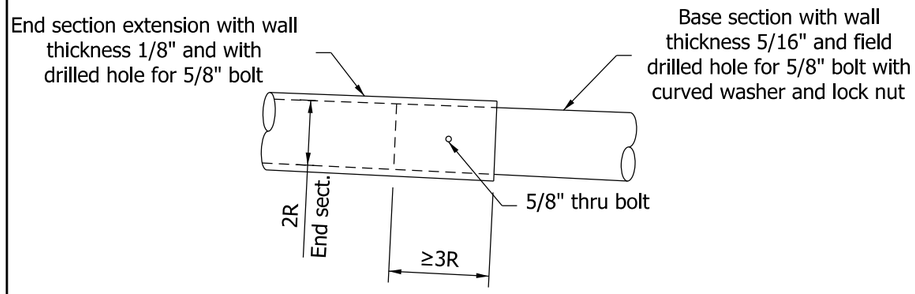

(2) OPTIONAL ARM SPLICE DETAIL

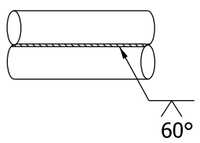

(5) TYPICAL SEAM WELD

NOTES:

(1) Number of cable inlets depends on L. See Arm Dimensions Table. The inlet diameter shall be 1 3/4" with rubber grommet (typ.).

(2) Optional splice can be used for arm length of greater than 40 ft. Field assembly shall achieve a snug tight joint having overlap not less than 1.5 times the inside dimension of the end section.

(3) Arm rise R is measured in the undeflected position without vertical loads on the arm.

(4) See Standard Drawing E 805-TSCS-06 for handhole details.

(5) If seam welds are used, the weld location for the arms shall be along the bottom, and on the side of the pole as shown.

ARM DIMENSIONS TABLE

L	ARM DIAMETER AT POLE	ARM WALL THICKNESS	R (3)	CABLE INLETS (1)
15'	5 1/2"	1/8"	7 1/2"	A
20'	5 1/2"	1/8"	10"	A
25'	7"	1/8"	1'-0 1/2"	A
30'	8"	1/8"	1'-3"	A, B
35'	8"	1/8"	1'-5 1/2"	A, B
40'	9"	1/8"	1'-8"	A, B, C
45'	10"	1/8"	1'-10 1/2"	A, B, C
50'	11"	1/8"	2'-1"	A, B, C
55'	11"	1/8"	2'-3 1/2"	A, B, C
60'	12"	1/8"	2'-6"	A, B, C

INDIANA DEPARTMENT OF TRANSPORTATION

TRAFFIC SIGNAL CANTILEVER STRUCTURE
COMBINATION ARM DIMENSIONS & DETAILS

SEPTEMBER 2013

STANDARD DRAWING NO. E 805-TSCS-10

ALFREDO B. HANZA REGISTERED No. 60020657 STATE OF INDIANA PROFESSIONAL ENGINEER

/s/ Alfredo B. Hanza 02/05/13
DESIGN STANDARDS ENGINEER DATE

/s/ Mark A. Miller 03/27/13
CHIEF ENGINEER DATE

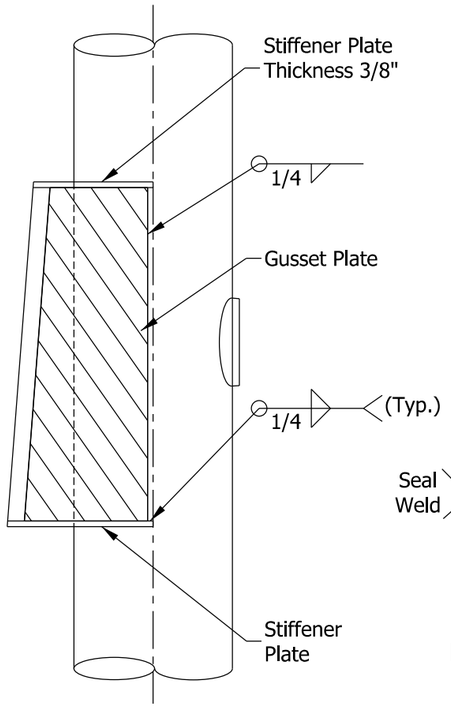

ELEVATION OF GUSSET PLATES

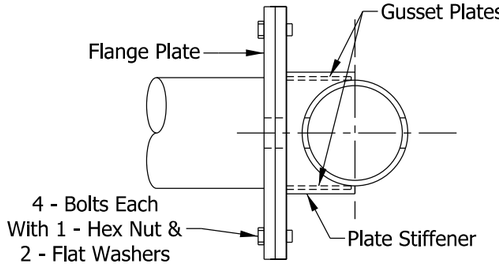

SECTION G-G

NOTES:

1. See Standard Drawing E 805-TSCS-06 for handhole details.
2. The required combination arm rise shall be built into the gusset plate at the angle X. The angle X is described as arc tan R/L, where R is the combination arm rise and L is the arm length. Both R and L vary and are listed in the Arm Dimensions Table on Standard Drawing E 805-TSCS-03.
3. Use continuous backing ring, 5/16" x 2" minimum. Tack weld only in root area of final weld.

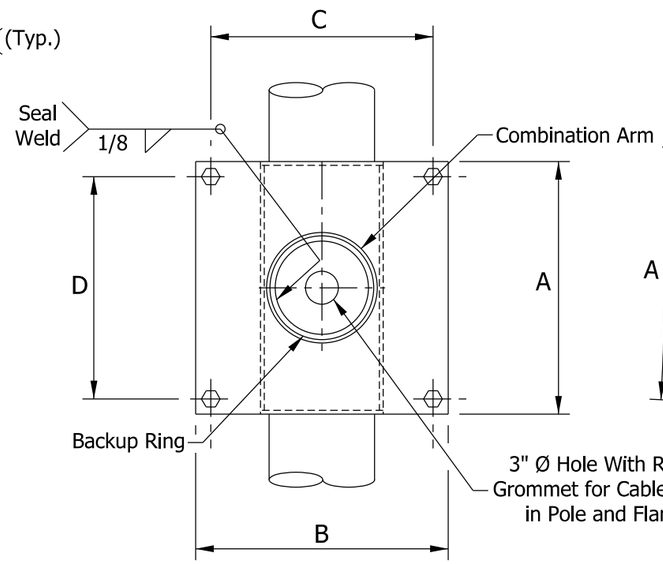

SECTION F-F

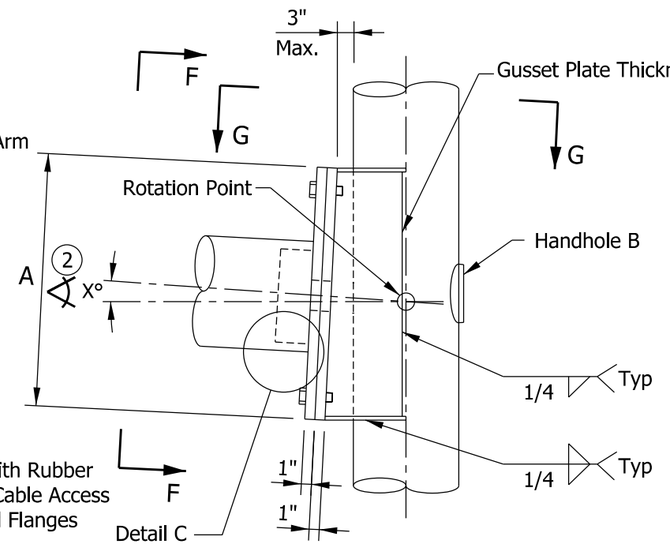

ELEVATION

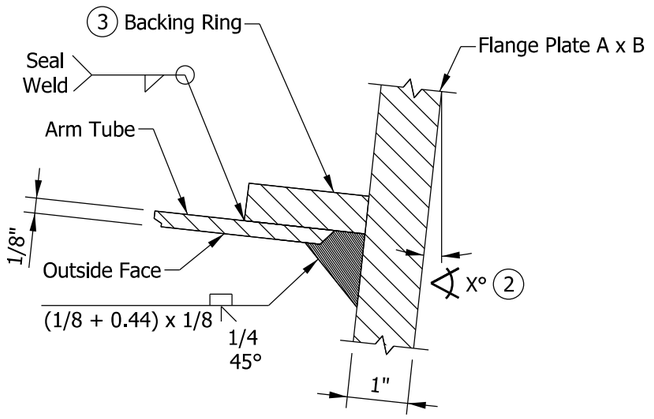

DETAIL C - ARM WELD

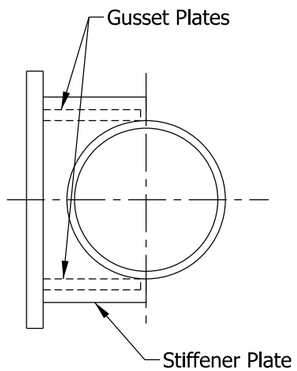

TOP OF GUSSET PLATES

COMBINATION ARM CONNECTION DETAIL

PLATES AND BOLTS FOR COMBINATION ARM CANTILEVER				
ARM LENGTH	FLANGE PLATE A x B	BOLT PATTERN C x D	FLANGE PLATE THICKNESS	BOLT
15' to 35'	20" x 20"	17" x 17"	1"	7/8" - 9 UNC x 3.5" Long
>35' to 60'	25" x 25"	22" x 22"	1"	7/8" - 9 UNC x 3.5" Long

INDIANA DEPARTMENT OF TRANSPORTATION

TRAFFIC SIGNAL CANTILEVER STRUCTURE
COMBINATION ARM CONNECTION DETAILS

SEPTEMBER 2014

STANDARD DRAWING NO. E 805-TSCS-11

ALFREDO B. HANZA
REGISTERED
No. 60020657
STATE OF INDIANA
PROFESSIONAL ENGINEER

/s/ Alfredo B. Hanza 12/02/13
DESIGN STANDARDS ENGINEER DATE

/s/ Mark A. Miller 12/05/13
CHIEF ENGINEER DATE

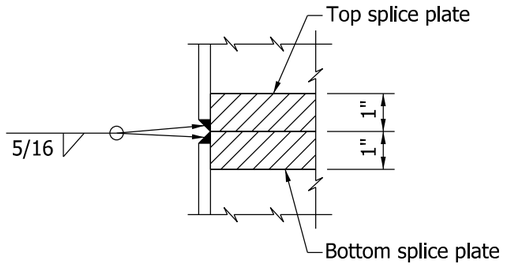

WELD DETAIL D

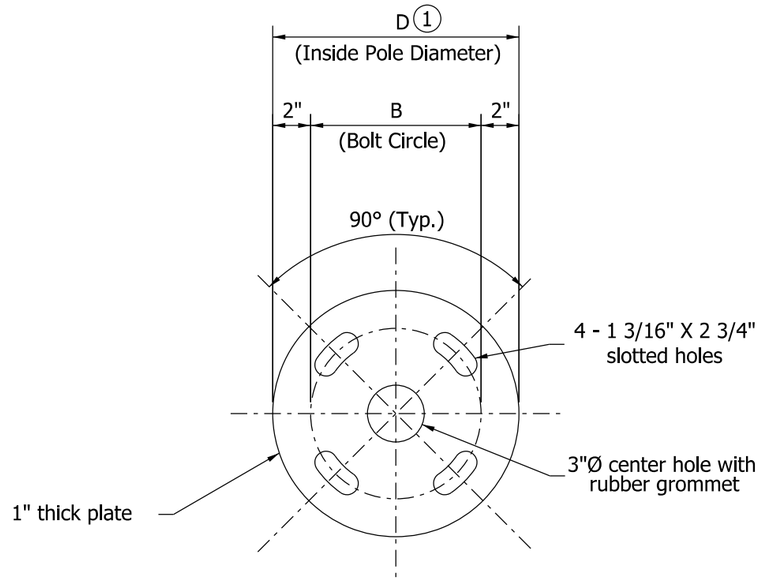

TOP SPLICE PLATE

NOTES:

1. See Standard Drawing E 805-TSCS-09 for pole dimensions.
2. See Standard Drawings E 805-TSCS-04 and -13 for bottom splice plate details.
3. Diameter at the bottom of Pole Section 2 shall match the diameter at the top of Pole Section 1.

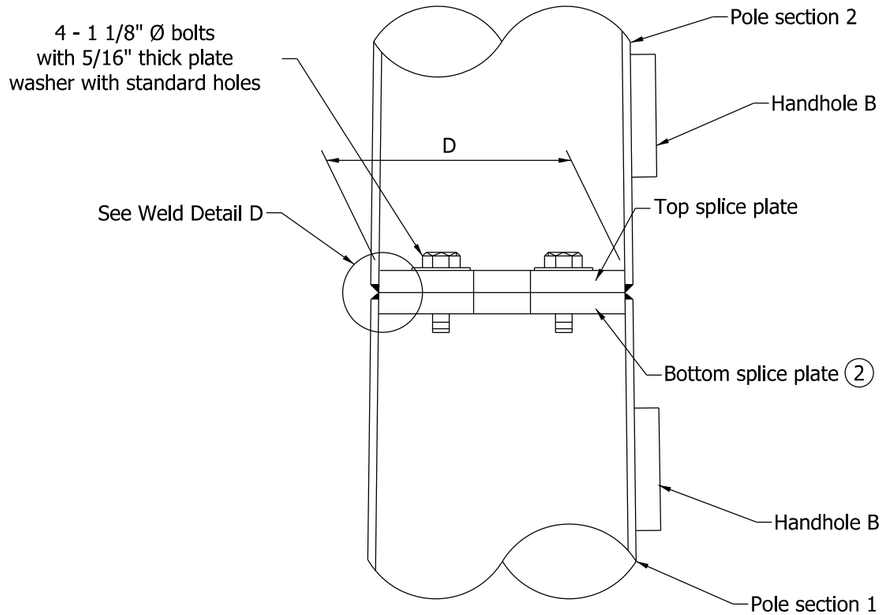

ELEVATION

INDIANA DEPARTMENT OF TRANSPORTATION

TRAFFIC SIGNAL CANTILEVER STRUCTURE
COMBINATION POLE SPLICE DETAILS
FOR ARMS 35' OR LESS

SEPTEMBER 2013

STANDARD DRAWING NO. E 805-TSCS-12

ALFREDO B. HANZA
REGISTERED
No.
60020657
STATE OF
INDIANA
PROFESSIONAL ENGINEER

/s/ Alfredo B. Hanza 02/05/13
DESIGN STANDARDS ENGINEER DATE

/s/ Mark A. Miller 03/27/13
CHIEF ENGINEER DATE

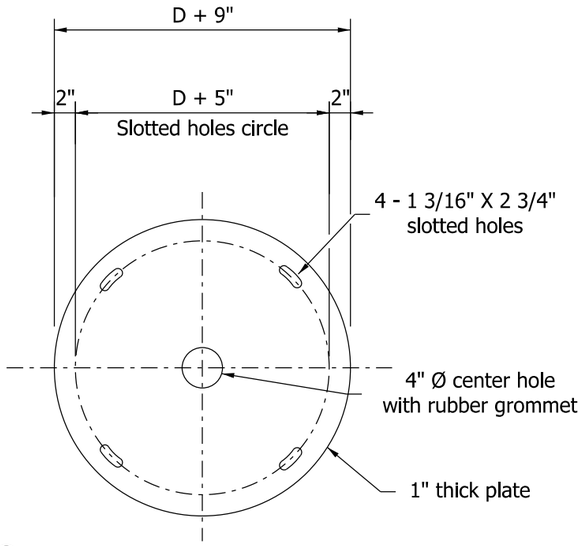

③ TOP CONNECTION PLATE

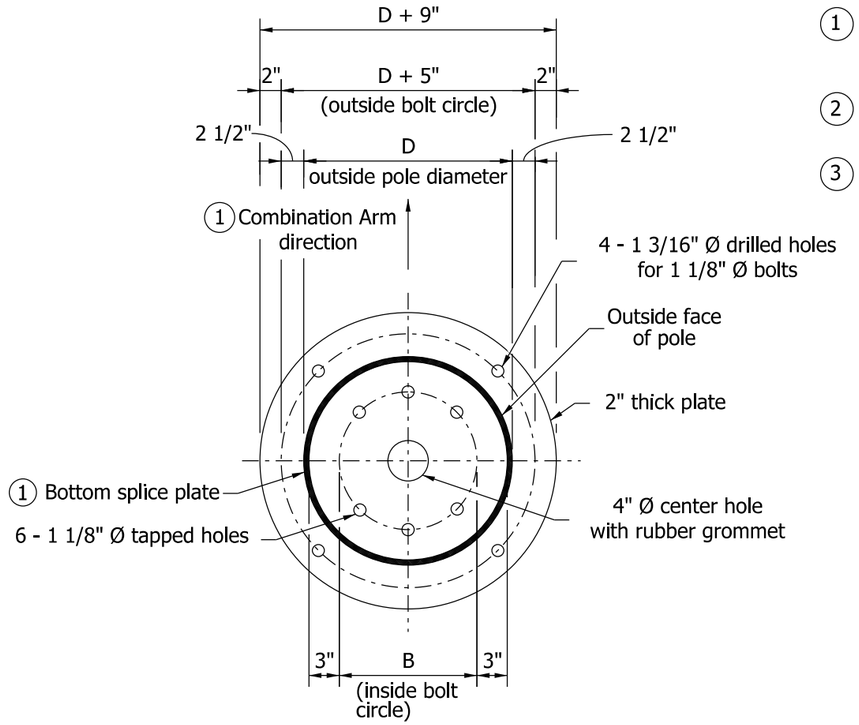

② BOTTOM CONNECTION PLATE

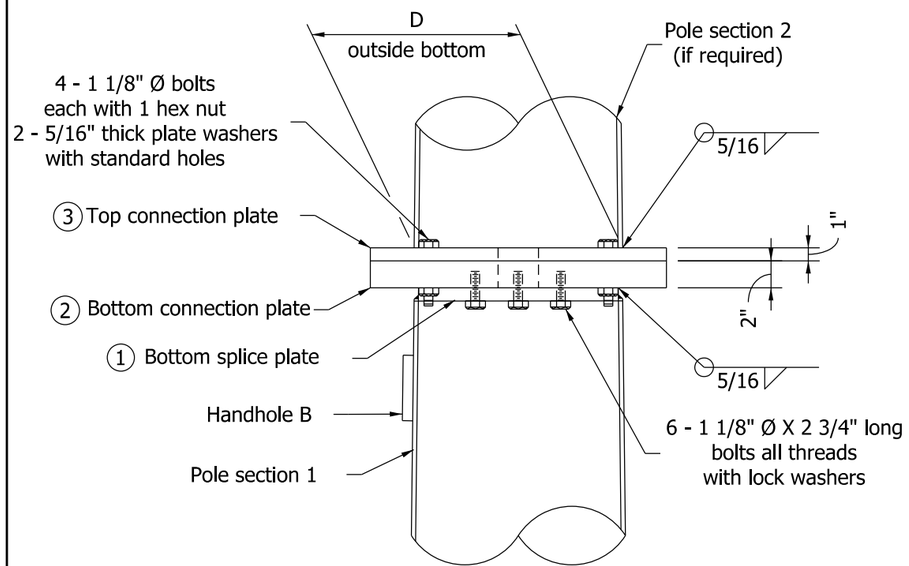

ELEVATION

NOTES:

1. Orient bottom splice and bottom connection plates with combination arm as shown on the bottom splice plate detail on Standard Drawings E 805-TSCS-04 and -12.
2. All plate dimensions shall be based upon the outside diameter D at the top of pole section 1.
3. Diameter at bottom of pole section 2 shall match the diameter at the top of pole section 1.

INDIANA DEPARTMENT OF TRANSPORTATION

TRAFFIC SIGNAL CANTILEVER STRUCTURE
COMBINATION POLE SPLICE DETAILS
FOR ARM OF GREATER THAN 35' TO 60'
SEPTEMBER 2013

STANDARD DRAWING NO. E 805-TSCS-13

ALFREDO B. HANZA
REGISTERED
No. 60020657
STATE OF INDIANA
PROFESSIONAL ENGINEER

/s/ Alfredo B. Hanza 02/05/13
DESIGN STANDARDS ENGINEER DATE

/s/ Mark A. Miller 03/27/13
CHIEF ENGINEER DATE

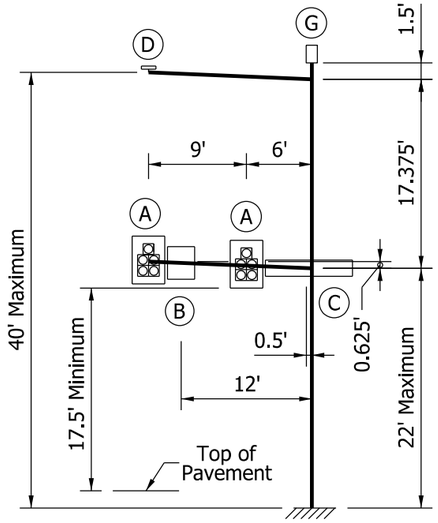

15' ARM

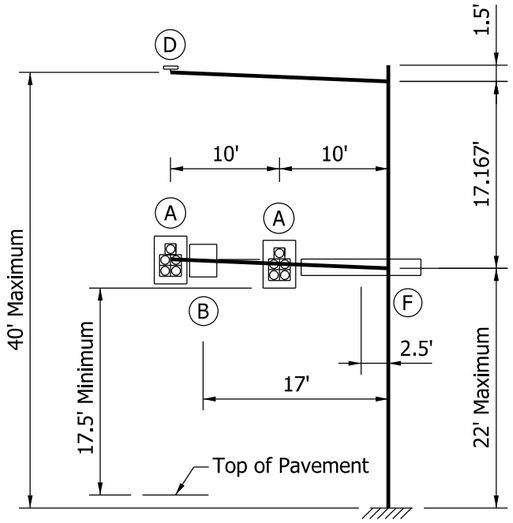

20' ARM

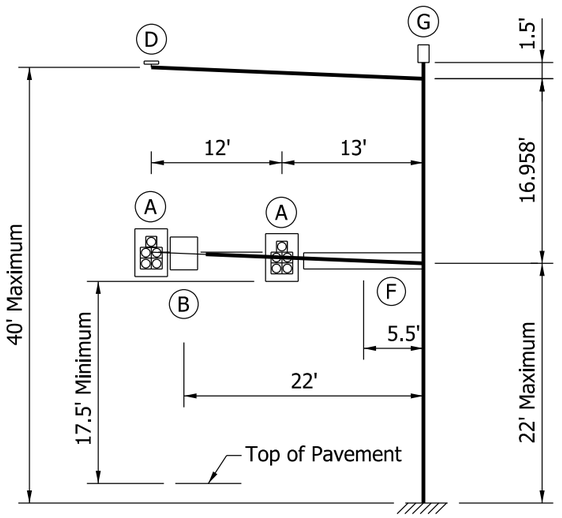

25' ARM

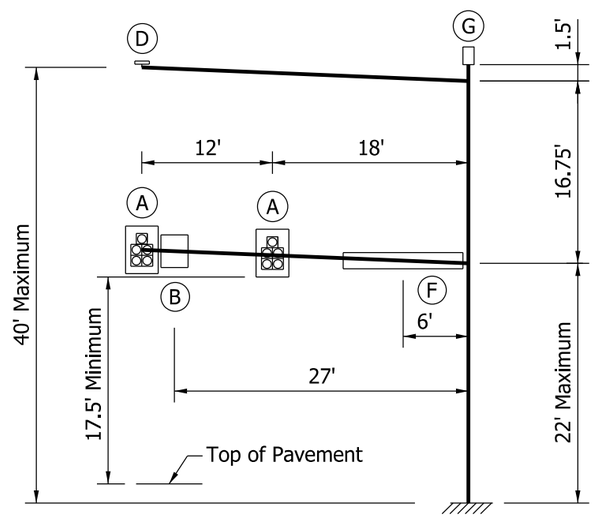

30' ARM

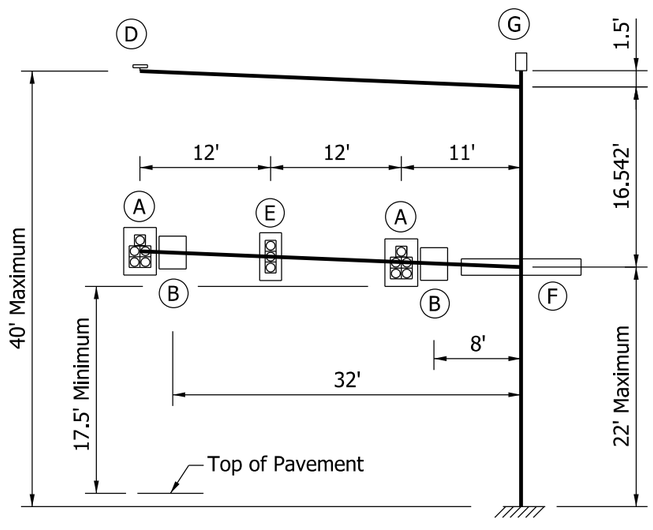

35' ARM

LEGEND	
DEVICE	DESCRIPTION
A	12" - 5 Section Signal Head With Backplates
B	36" x 30" Regulatory Sign
C	18" x 96" Street Name Sign
D	1 - Mounted Camera
E	12" - 3 Section Signal Head With Backplates
F	18" x 132" Street Name Sign
G	Top Pole Luminaire

NOTE:

1. The structure arms and pole are designed for the above loading conditions. Foundation types A and C are designed for arms having length of 35 ft or less. See Standard Drawings E 805-TSCS-16 and -18 for foundation types A and C.

INDIANA DEPARTMENT OF TRANSPORTATION

TRAFFIC SIGNAL CANTILEVER STRUCTURE COMBINATION ARM LOADING FOR ARM OF 35' OR LESS

SEPTEMBER 2013

STANDARD DRAWING NO. E 805-TSCS-14

ALFREDO B. HANZA
REGISTERED
No.
60020657
STATE OF
INDIANA
PROFESSIONAL ENGINEER

/s/ Alfredo B. Hanza 02/05/13
DESIGN STANDARDS ENGINEER DATE

/s/ Mark A. Miller 03/27/13
CHIEF ENGINEER DATE

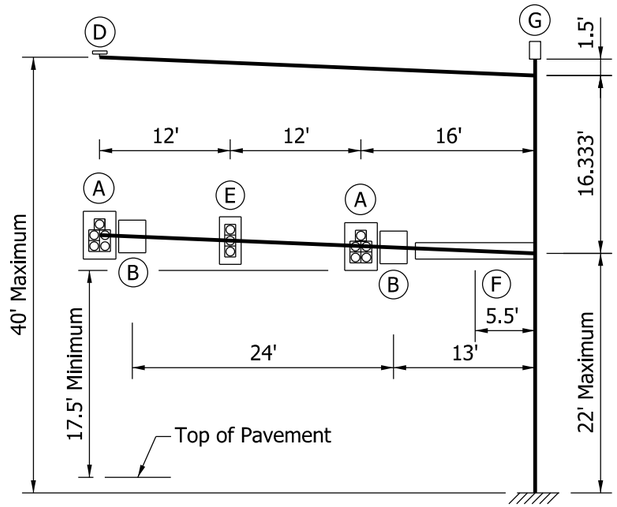

40' ARM

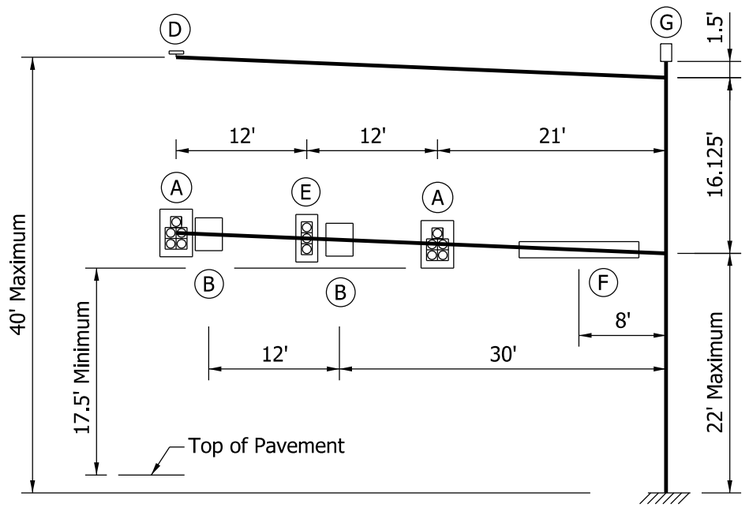

45' ARM

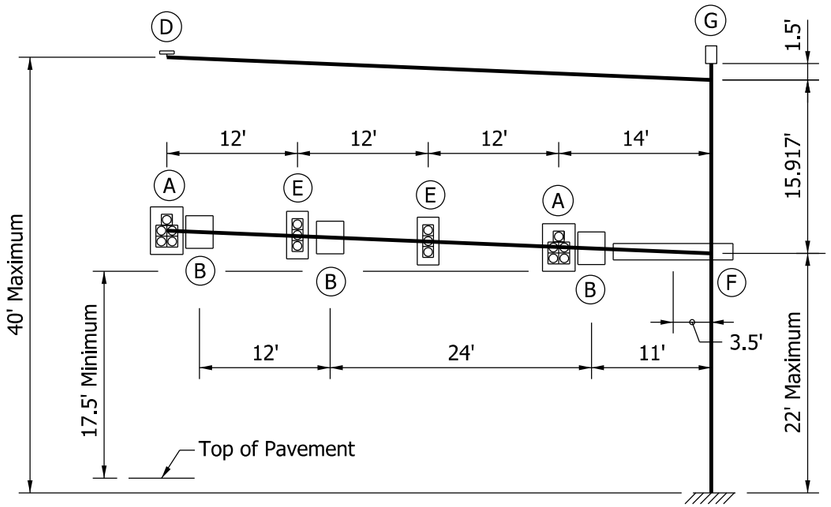

50' ARM

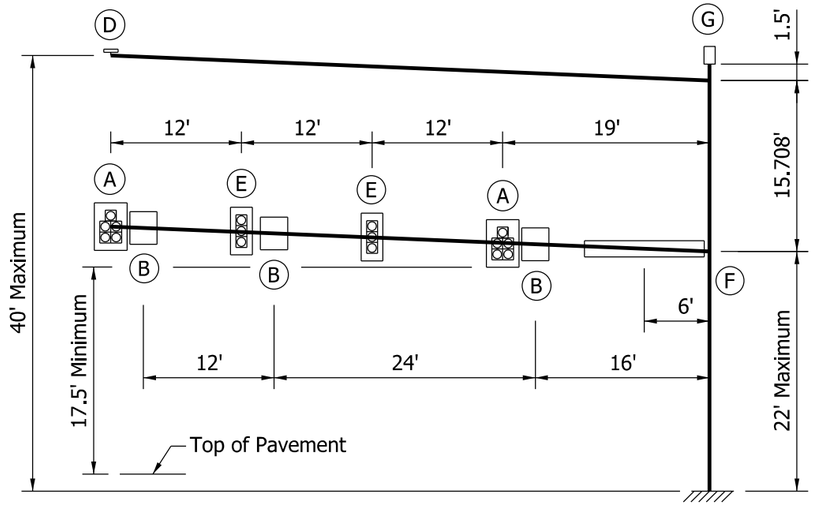

55' ARM

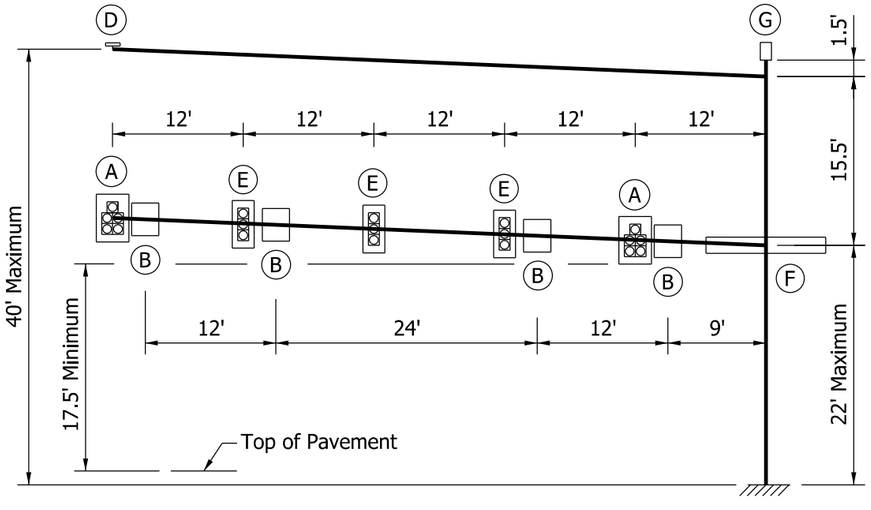

60' ARM

NOTES:

1. See Standard Drawing E 805-TSCS-14 for Legend.
2. The structure arms and pole are designed for the above loading conditions. Foundation types B and D are designed for arms having length of greater than 35 ft to 60 ft. See Standard Drawings E 805-TSCS-17 and -19 for foundation types B and D.

INDIANA DEPARTMENT OF TRANSPORTATION

TRAFFIC SIGNAL CANTILEVER STRUCTURE
COMBINATION ARM LOADING
FOR ARM OF GREATER THAN 35' TO 60'
SEPTEMBER 2013

STANDARD DRAWING NO. E 805-TSCS-15

ALFREDO B. HANZA
REGISTERED
No. 60020657
STATE OF INDIANA
PROFESSIONAL ENGINEER

/s/ Alfredo B. Hanza 02/05/13
DESIGN STANDARDS ENGINEER DATE

/s/ Mark A. Miller 03/27/13
CHIEF ENGINEER DATE

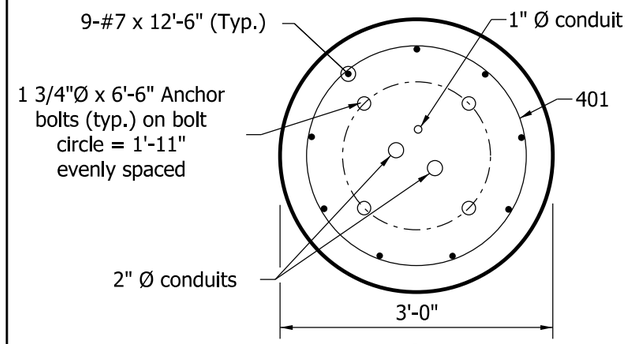

SECTION H-H

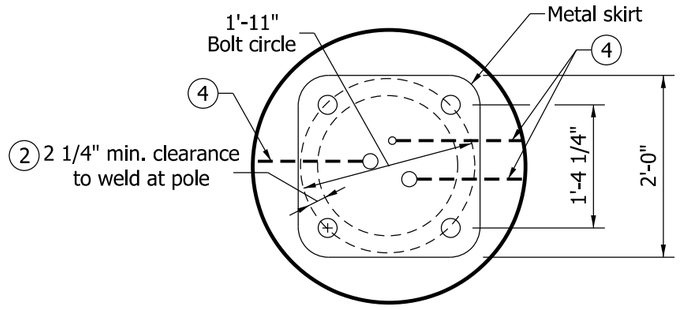

PLAN

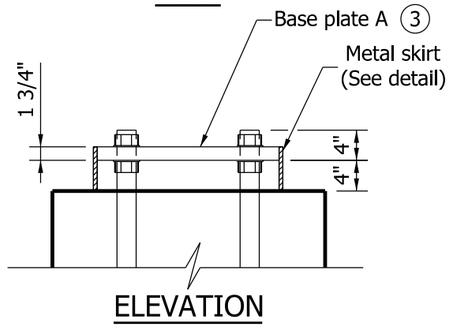

ELEVATION

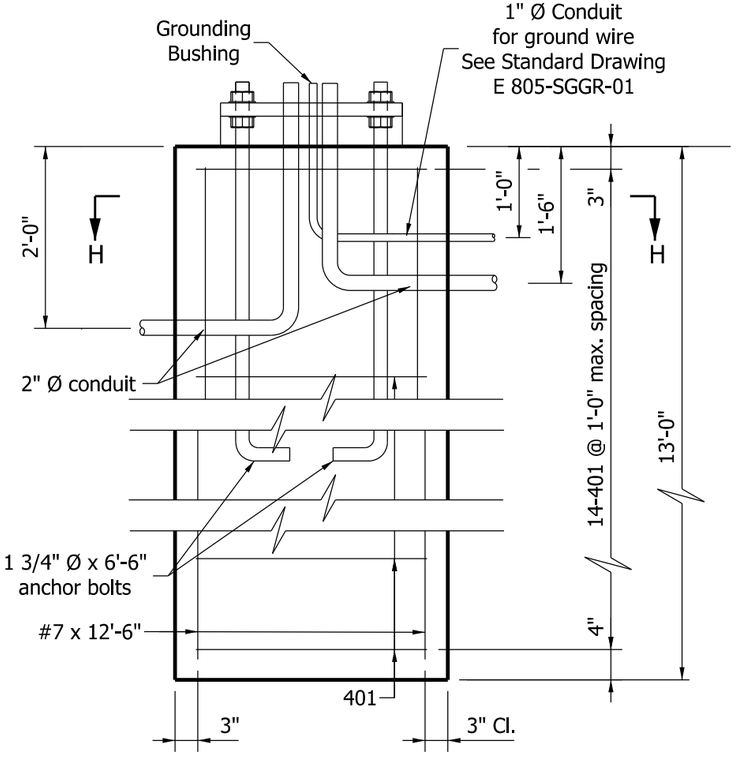

SHAFT SECTION

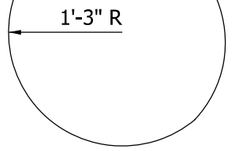

401 X 9'-5"

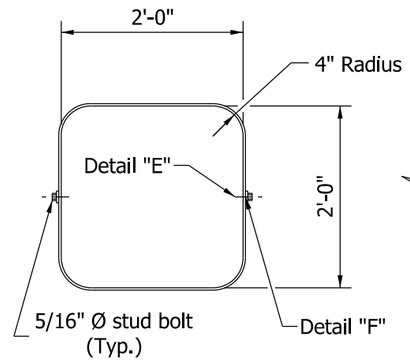

METAL SKIRT DETAIL

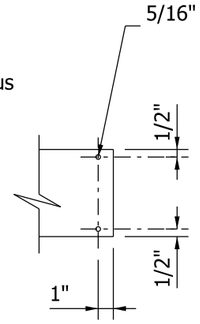

DETAIL E

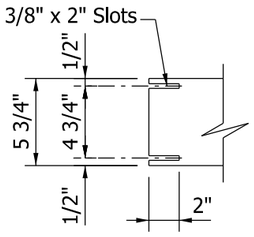

DETAIL F

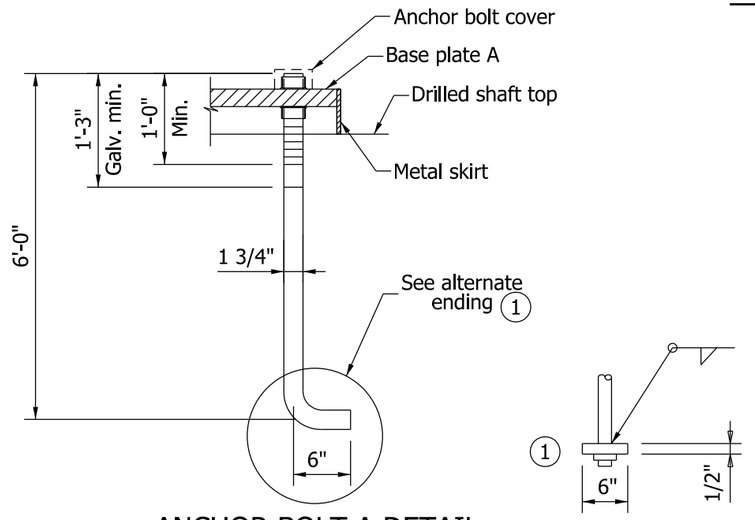

ANCHOR BOLT A DETAIL

BILL OF MATERIALS DRILLED SHAFT TYPE A

REINFORCING BARS			
SIZE OR MARK	NUMBER OF BARS	LENGTH (ft.)	WEIGHT (lbs.)
#7	9	12'-6"	
Total #7			230
401	14	9'-5"	
Total #4			88
Total Reinforcing Bars			318
CONCRETE			
Concrete, Class A			3.4 CYS

NOTES:

1. Alternate 6" x 6" x 1/2" square washer with hex nut welded to lower end may be substituted for bent anchor bolt.
2. Bolt circle, b, shall allow clearance for the plate washer. Cutting or trimming the washer will not be allowed.
3. See Standard Drawing E 805-TSCS-04 for base plate A details.
4. A tooled line or other type of permanent marking shall be provided on the top of the foundation to indicate the direction of the conduit.

INDIANA DEPARTMENT OF TRANSPORTATION

TRAFFIC SIGNAL CANTILEVER STRUCTURE DRILLED SHAFT FOUNDATION TYPE A FOR ARM OF 35' OR LESS

SEPTEMBER 2013

STANDARD DRAWING NO. E 805-TSCS-16

ALFREDO B. HANZA REGISTERED No. 60020657 STATE OF INDIANA PROFESSIONAL ENGINEER

/s/ Alfredo B. Hanza 02/05/13
DESIGN STANDARDS ENGINEER DATE

/s/ Mark A. Miller 03/27/13
CHIEF ENGINEER DATE

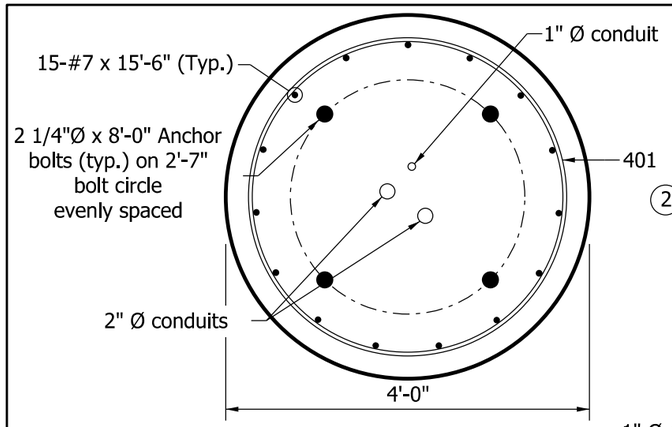

SECTION I-I

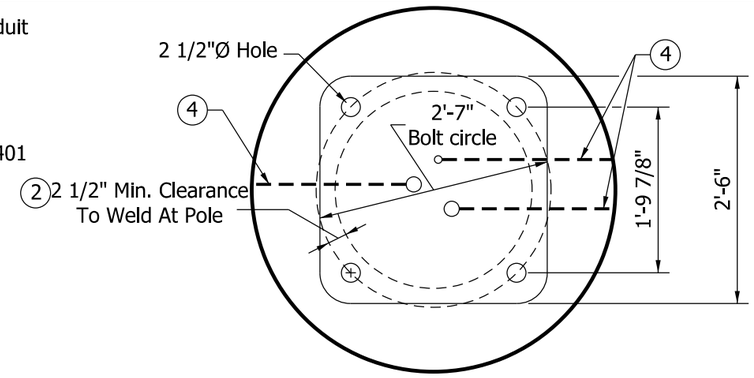

PLAN

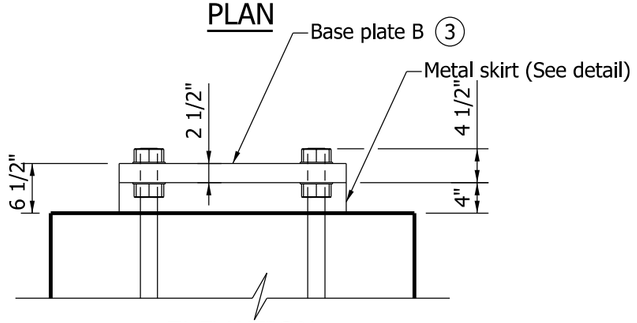

ELEVATION

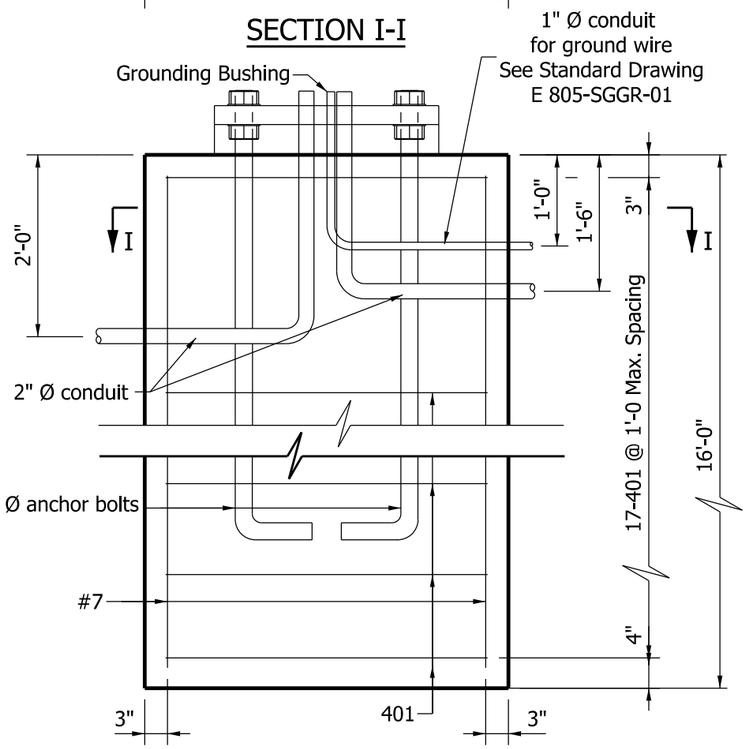

SHAFT SECTION

NOTES:

1. Alternate 8" x 8" x 1/2" square plate tapped and welded to the anchor bolt may be substituted for bent anchor bolt.
2. Bolt circle, b, shall allow clearance for the plate washer. Cutting or trimming the washer will not be allowed.
3. See Standard Drawing E 805-TSCS-04 for base plate B details.
4. A tooled line or other type of permanent marking shall be provided on the top of the foundation to indicate the direction of the conduits.

BILL OF MATERIALS
DRILLED SHAFT
TYPE B

REINFORCING BARS			
SIZE OR MARK	NUMBER OF BARS	LENGTH	WEIGHT (lbs.)
#7	15	15'-6"	
Total #7			475
401	17	12'-6"	
Total #4			142
Total Reinforcing Bars			617
CONCRETE			
Concrete, Class A			7.5 CYS

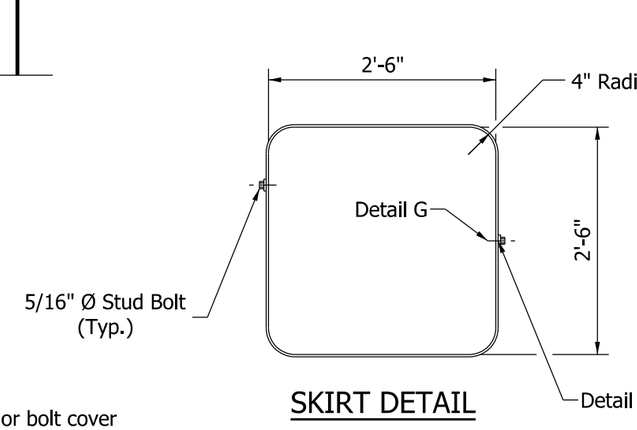

SKIRT DETAIL

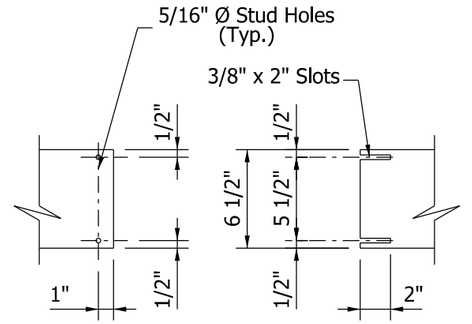

DETAIL G DETAIL H

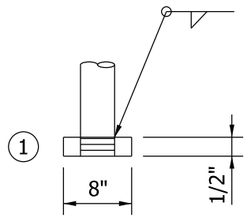

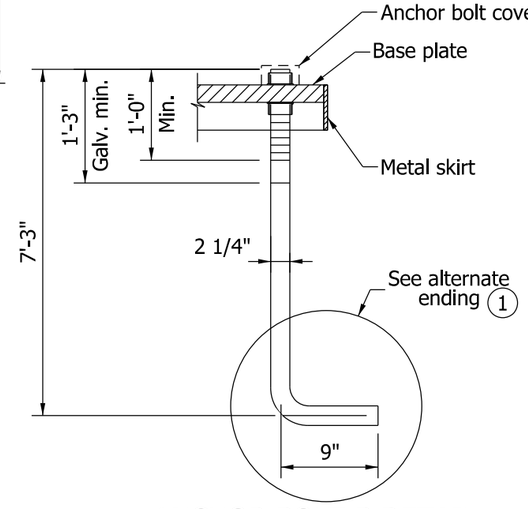

ANCHOR BOLT B DETAIL

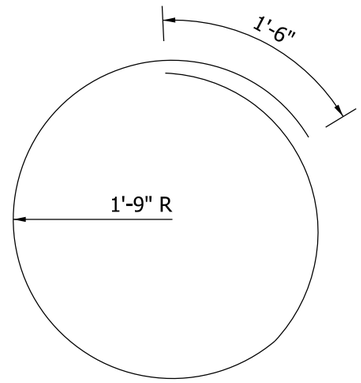

401 X 12'-6"

INDIANA DEPARTMENT OF TRANSPORTATION

TRAFFIC SIGNAL CANTILEVER STRUCTURE
DRILLED SHAFT FOUNDATION TYPE B
FOR ARM OF GREATER THAN 35' TO 60'
SEPTEMBER 2013

STANDARD DRAWING NO. E 805-TSCS-17

ALFREDO B. HANZA REGISTERED No. 60020657 STATE OF INDIANA PROFESSIONAL ENGINEER

/s/ Alfredo B. Hanza 02/05/13
DESIGN STANDARDS ENGINEER DATE

/s/ Mark A. Miller 03/27/13
CHIEF ENGINEER DATE

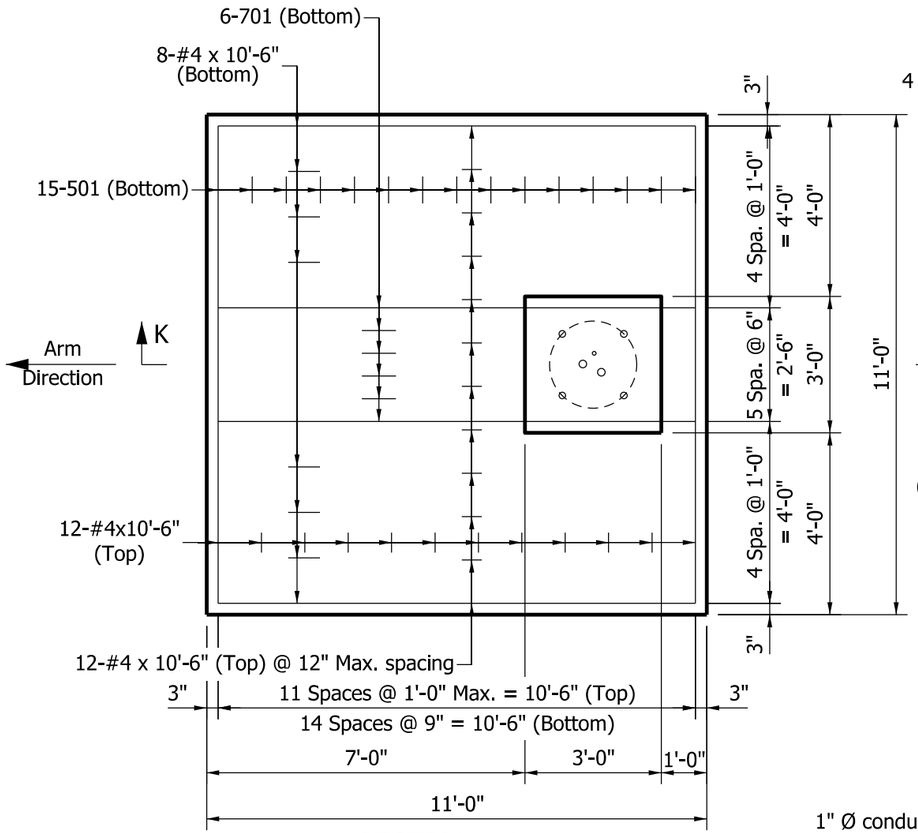

SECTION L-L

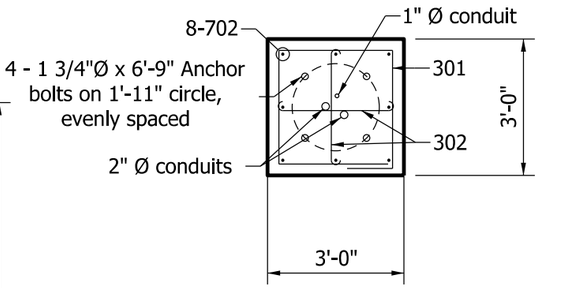

SECTION J-J

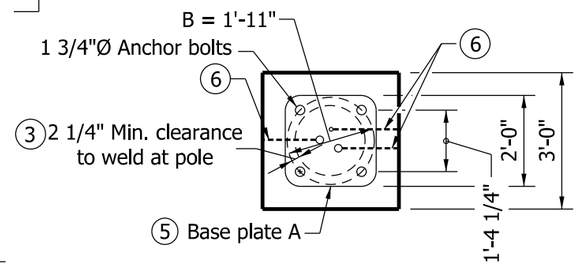

PLAN

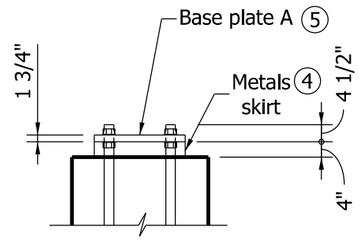

ELEVATION

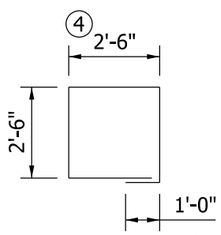

301 x 11'-0"

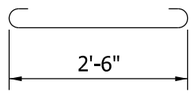

302 x 3'-4"

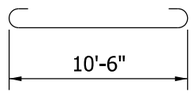

501 x 11'-8"

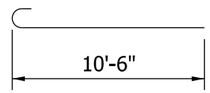

701 x 11'-4"

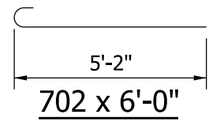

702 x 6'-0"

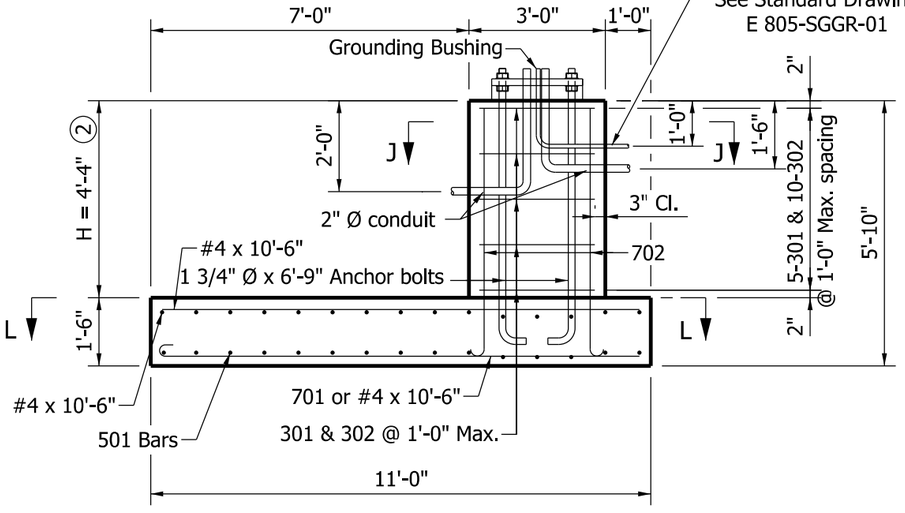

SECTION K-K

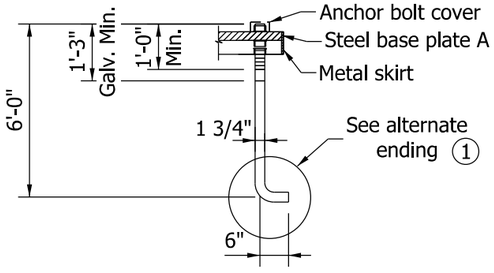

ANCHOR BOLT C DETAIL

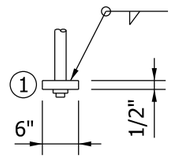

NOTES:

1. Alternate 6" x 6" x 1/2" square washer with hex nut welded to lower end may be substituted for the bend in the anchor bolt.
2. Minimum H required is 4 ft. soil cover over the entire footing area.
3. Bolt circle, B, shall allow clearance for the plate washer. Cutting or trimming the washer will not be allowed.
4. See Standard Drawing E 805-TSCS-16 for metal skirt details.
5. See Standard Drawing E 805-TSCS-04 for base plate A details.
6. A tooled line or other type of permanent marking shall be provided on the top of the foundation to indicate the direction of the conduits.

BILL OF MATERIALS SPREAD FOOTING TYPE C

REINFORCING BARS			
SIZE OR MARK	NUMBER OF BARS	LENGTH	WEIGHT (lbs.)
701	6	11'-4"	
702	8	6'-0"	
Total #7			237
501	15	11'-8"	
Total #5			183
#4	32	10'-6"	
Total #4			224
301	5	11'-0"	
302	10	3'-4"	
Total #3			33
Total Reinforcing Bars			677
CONCRETE			
Concrete, Class A			8.2 CYS

INDIANA DEPARTMENT OF TRANSPORTATION

TRAFFIC SIGNAL CANTILEVER STRUCTURE
SPREAD FOOTING FOUNDATION TYPE C
FOR ARM OF 35' OR LESS

SEPTEMBER 2013

STANDARD DRAWING NO. E 805-TSCS-18

ALFREDO B. HANZA REGISTERED No. 60020657 STATE OF INDIANA PROFESSIONAL ENGINEER

/s/ Alfredo B. Hanza 02/05/13
DESIGN STANDARDS ENGINEER DATE

/s/ Mark A. Miller 03/27/13
CHIEF ENGINEER DATE

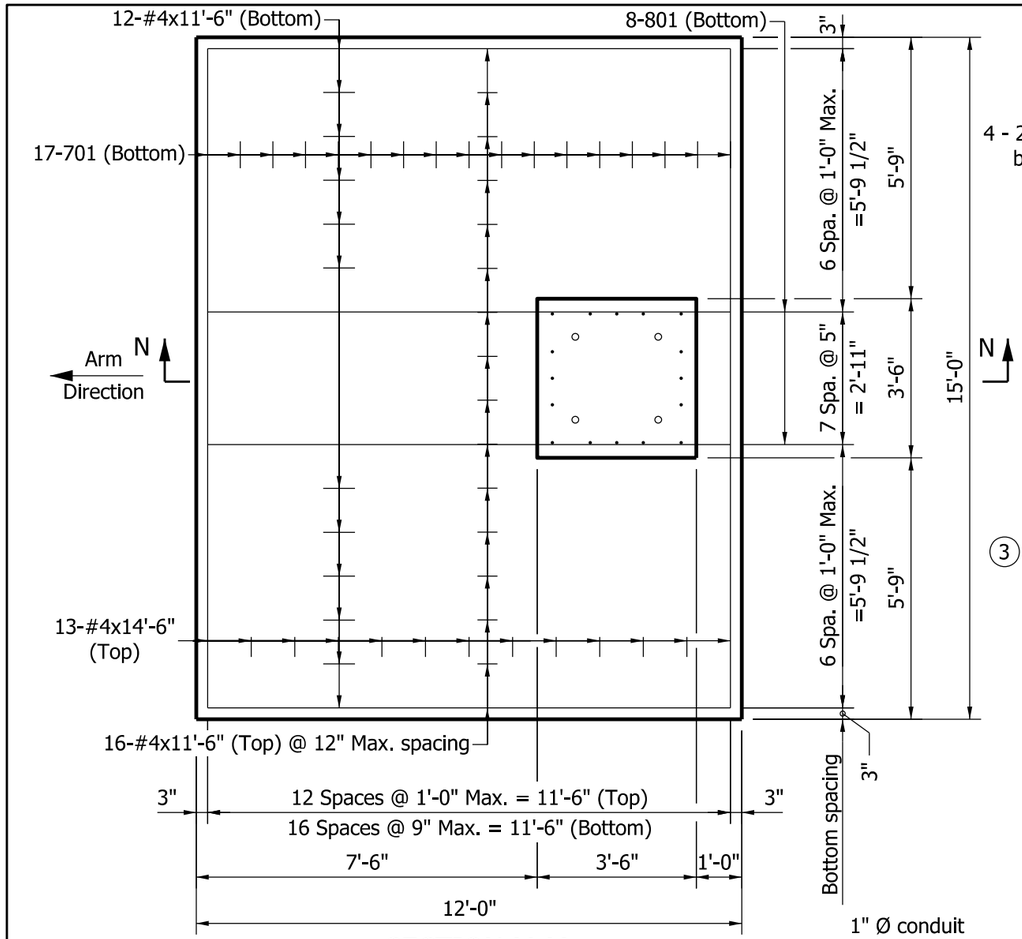

SECTION M-M

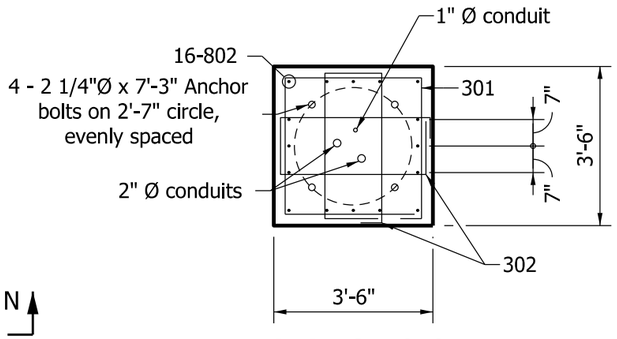

SECTION O-O

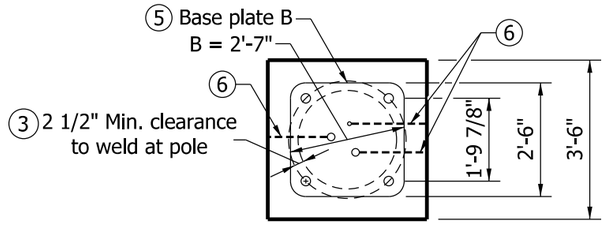

PLAN

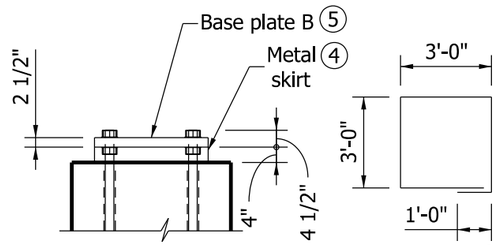

ELEVATION

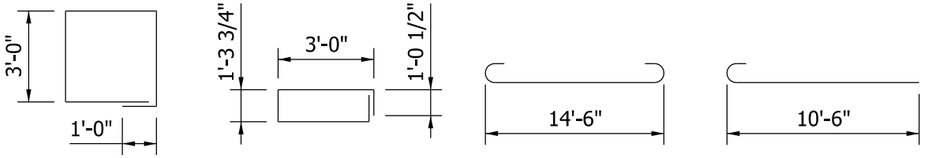

301 x 13'-0" | 302 x 9'-8" | 701 x 16-2" | 801 x 11'-5"

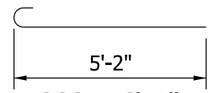

802 x 6'-1"

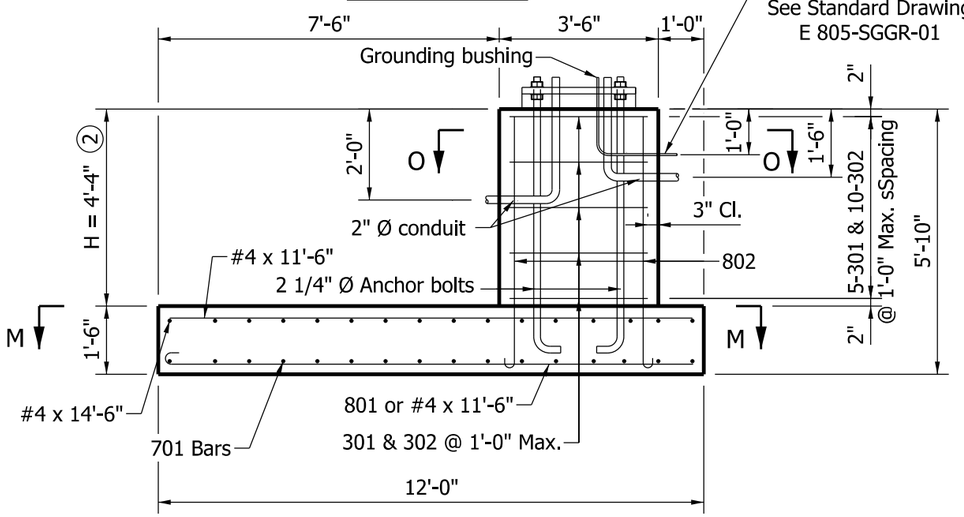

SECTION N-N

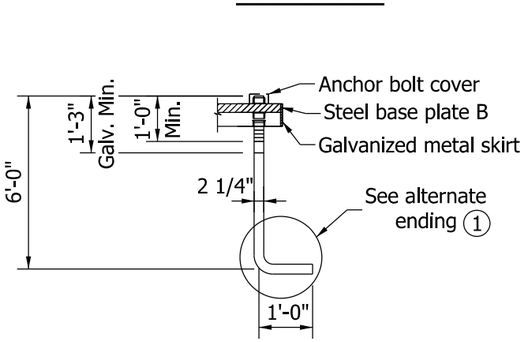

ANCHOR BOLT D DETAIL

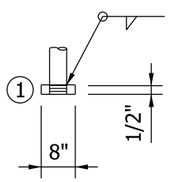

NOTES:

1. Alternate 8" x 8" x 1/2" square plate tapped and welded to anchor bolt may be substituted for the bent anchor bolt.
2. Minimum H required is 4 ft. soil cover over the entire footing area.
3. Bolt circle, B, shall allow clearance for the plate washer. Cutting or trimming the washer will not be allowed.
4. See Standard Drawing E 805-TSCS-17 for metal skirt details.
5. See Standard Drawing E 805-TSCS-04 for base plate B details.
6. A tooled line or other type of permanent marking shall be provided on the top of the foundation to indicate the direction of the conduits.

BILL OF MATERIALS SPREAD FOOTING TYPE D

REINFORCING BARS			
SIZE OR MARK	NUMBER OF BARS	LENGTH	WEIGHT (lbs.)
801	8	11'-5"	
802	16	6'-1"	
Total #8			504
701	17	16'-2"	
Total #7			562
#4	13	14'-6"	
#4	28	11'-6"	
Total #4			341
301	5	13'-0"	
302	10	9'-8"	
Total #3			61
Total Reinforcing Bars			1468
CONCRETE			
Concrete, Class A			12.0 CYS

INDIANA DEPARTMENT OF TRANSPORTATION

TRAFFIC SIGNAL CANTILEVER STRUCTURE SPREAD FOOTING FOUNDATION TYPE D FOR ARM OF GREATER THAN 35' TO 60'

SEPTEMBER 2013

STANDARD DRAWING NO. E 805-TSCS-19

ALFREDO B. HANZA REGISTERED No. 60020657 STATE OF INDIANA PROFESSIONAL ENGINEER

/s/ Alfredo B. Hanza — 02/05/13
DESIGN STANDARDS ENGINEER — DATE

/s/ Mark A. Miller — 03/27/13
CHIEF ENGINEER — DATE

GENERAL NOTES

1. See Standard Drawing E 807-BLIT-03 for bending diagrams.

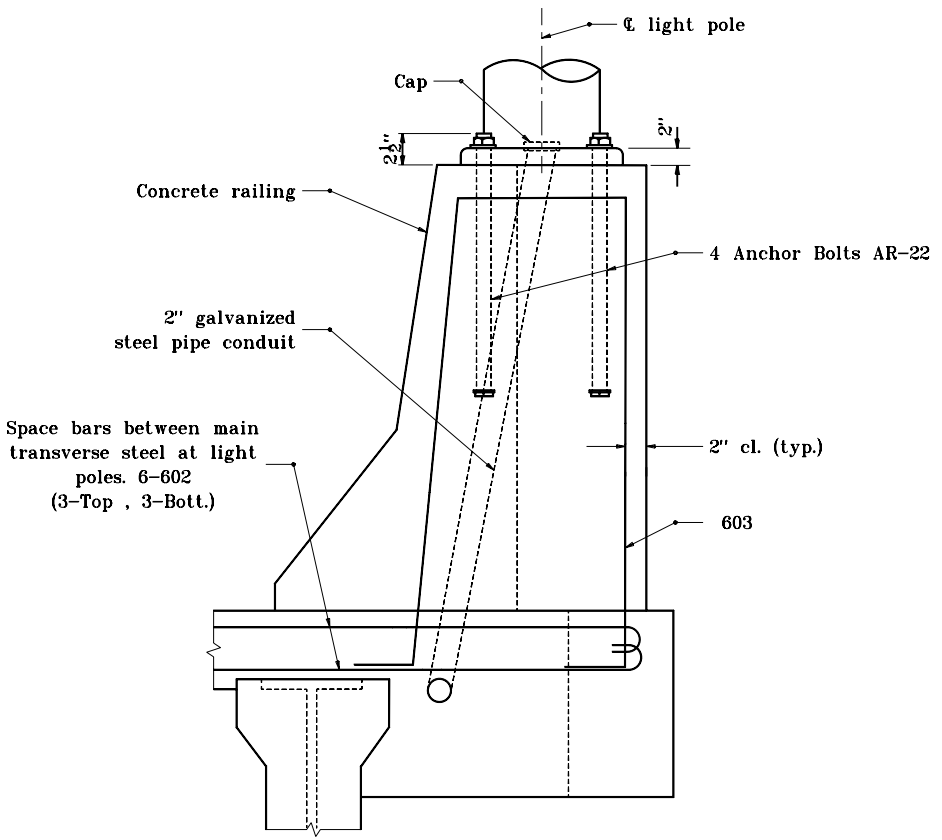

SECTION

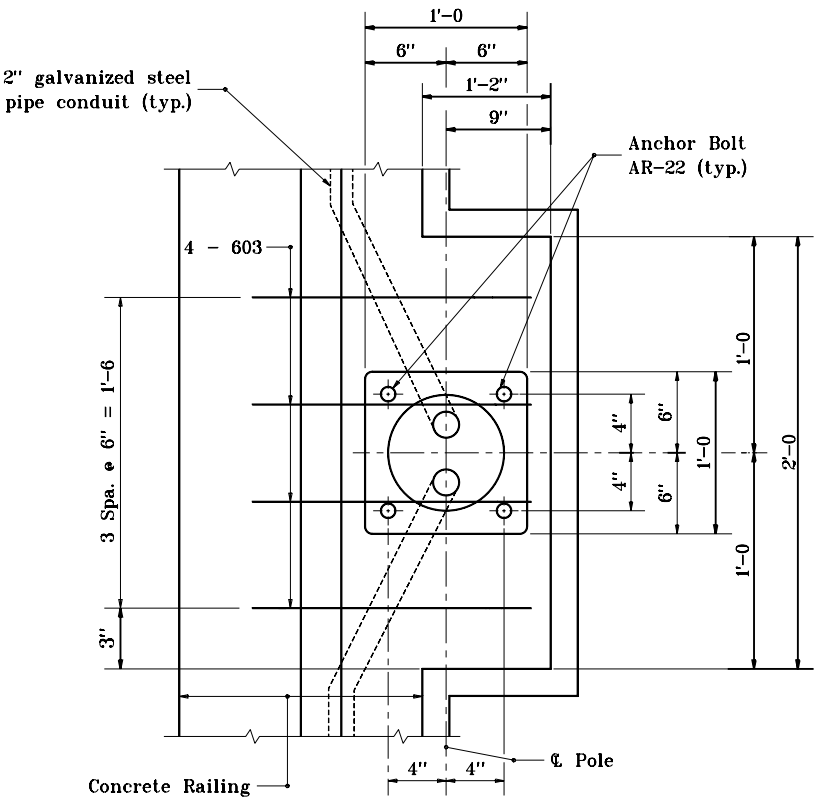

The bolt circle diameter is approximately 11½".

PLAN

INDIANA DEPARTMENT OF TRANSPORTATION

BRIDGE LIGHTING DETAILS

SEPTEMBER 1997

STANDARD DRAWING NO. **E 807-BLIT-01**

ANTHONY L. URENOVICH REGISTERED No. 18095 STATE OF INDIANA PROFESSIONAL ENGINEER

DESIGN STANDARDS ENGINEER

DETAILS PLACED IN THIS FORMAT	11-15-99
/s/ Anthony L. Uremovich	11-15-99
DESIGN STANDARDS ENGINEER	DATE
/s/ Firooz Zandi	11-15-99
CHIEF HIGHWAY ENGINEER	DATE
ORIGINALLY APPROVED	9-01-97

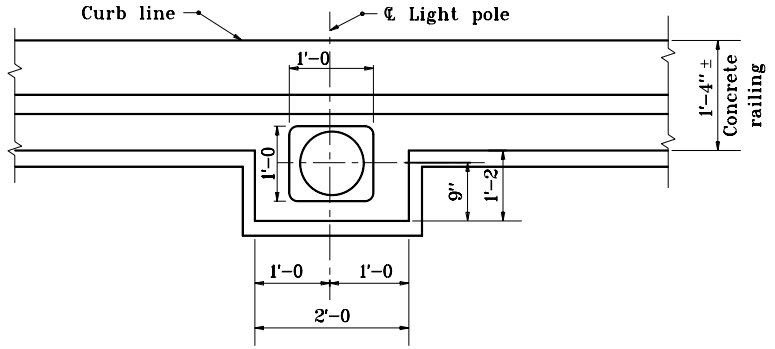

PLAN

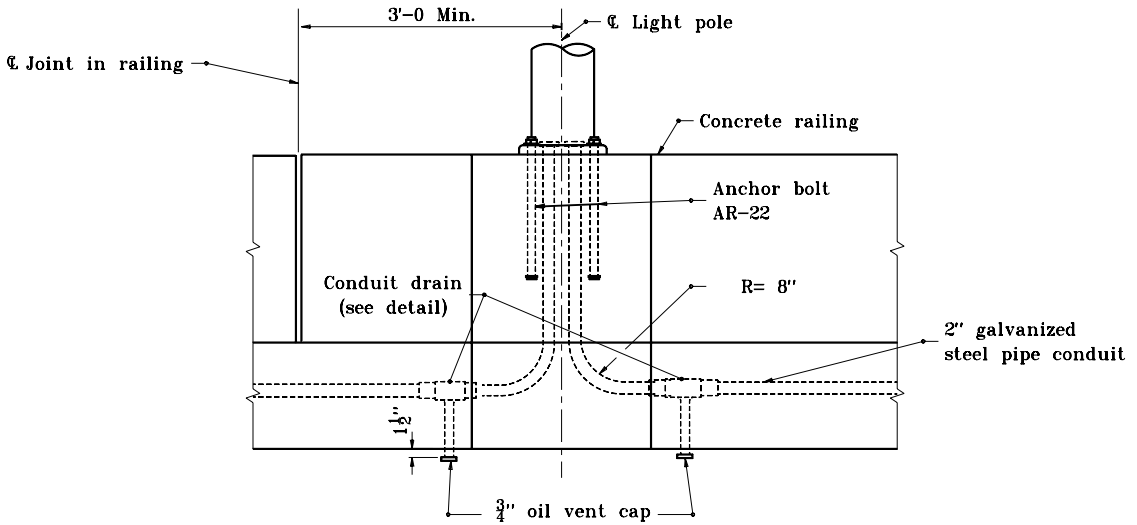

TYPICAL ELEVATION

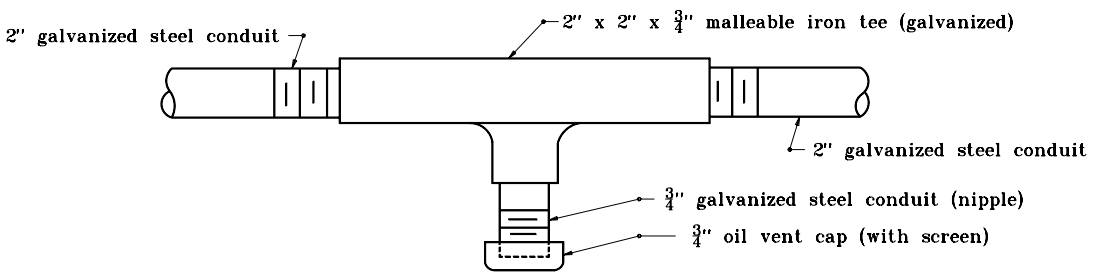

CONDUIT DRAIN DETAIL

INDIANA DEPARTMENT OF TRANSPORTATION

BRIDGE LIGHTING DETAILS

SEPTEMBER 1994

STANDARD DRAWING NO. **E 807–BLIT–02**

ANTHONY L. UREMOVICH REGISTERED No. 18095 STATE OF INDIANA PROFESSIONAL ENGINEER

DESIGN STANDARDS ENGINEER

DETAILS PLACED IN THIS FORMAT	11-15-99
/s/ Anthony L. Uremovich DESIGN STANDARDS ENGINEER	11-15-99 DATE
/s/ Firooz Zandi CHIEF HIGHWAY ENGINEER	11-15-99 DATE
ORGINALLY APPROVED	9-30-94

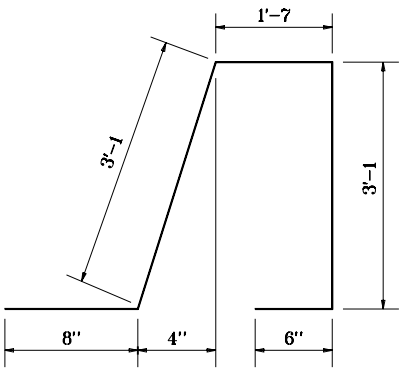

603 x 8'-11

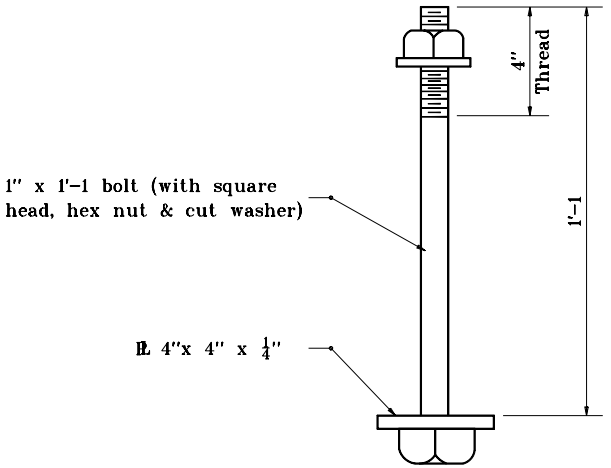

Galvanize thread, hex nut & cut washer.

ANCHOR BOLT AR-22

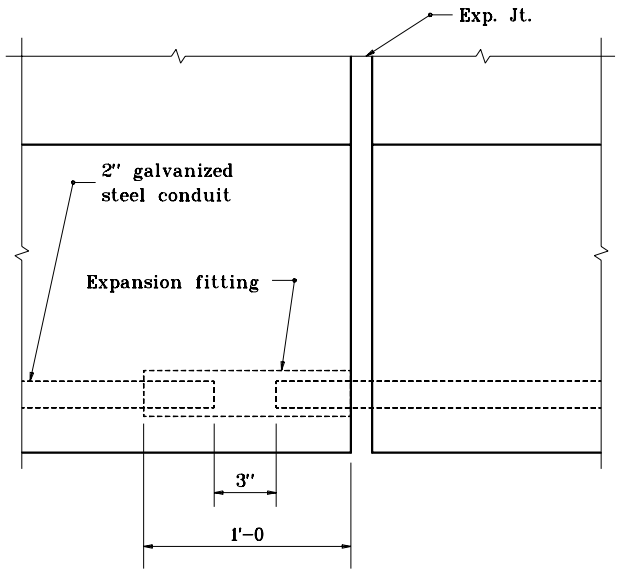

EXPANSION SLEEVE

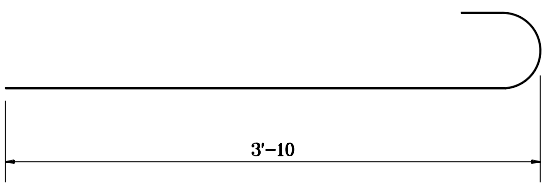

602 x 4'-8

INDIANA DEPARTMENT OF TRANSPORTATION

BRIDGE LIGHTING DETAILS

SEPTEMBER 1997

STANDARD DRAWING NO. **E 807-BLIT-03**

ANTHONY L. UREMOVICH REGISTERED No. 18095 STATE OF INDIANA PROFESSIONAL ENGINEER

DESIGN STANDARDS ENGINEER

DETAILS PLACED IN THIS FORMAT	11-15-99
/s/ Anthony L. Uremovich DESIGN STANDARDS ENGINEER	11-15-99 DATE
/s/ Firooz Zandi CHIEF HIGHWAY ENGINEER	11-15-99 DATE
ORIGINALLY APPROVED	9-01-97

GENERAL NOTES

1. See General Plan for location of light posts.
2. See Bill of Materials for reinforcing steel.
3. Ream and cap all ends.
4. Carry conduit 2'–0 beyond shoulder line.
5. Bars 602 and 603 shall be epoxy coated.
6. Mast arm shall be truss type.
7. Vertical contraction joints in the railing shall be located a minimum of 3'–0 from the centerline of the light pole.

INDIANA DEPARTMENT OF TRANSPORTATION

BRIDGE LIGHTING DETAILS

SEPTEMBER 1997

STANDARD DRAWING NO. **E 807–BLIT–04**

ANTHONY L. UREMOVICH REGISTERED No. 18095 STATE OF INDIANA PROFESSIONAL ENGINEER

DESIGN STANDARDS ENGINEER

DETAILS PLACED IN THIS FORMAT 11-15-99

/s/ Anthony L. Uremovich 11-15-99
DESIGN STANDARDS ENGINEER DATE

/s/ Firooz Zandi 11-15-99
CHIEF HIGHWAY ENGINEER DATE

ORIGINALLY APPROVED 9-01-97

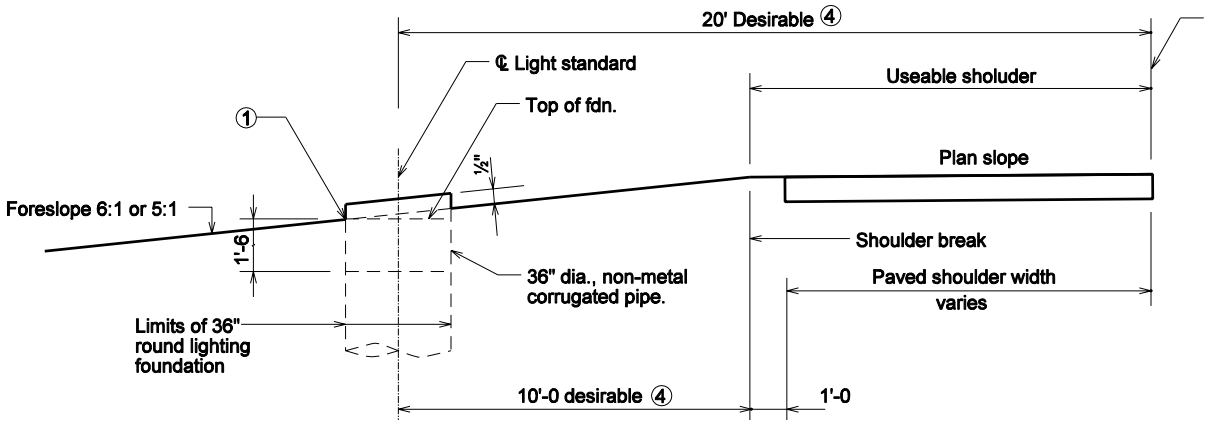

ELEVATION, FILL SECTION, 6:1 OR 5:1 SLOPE, ROUND FOUNDATION

Notes:

①② See Standard Drawing E 807-LTFD-05 General Notes.

3. Transformer base door shall face the right-of-way line.

4 Use which ever gives the greatest offset distance from the edge of the travel lane.

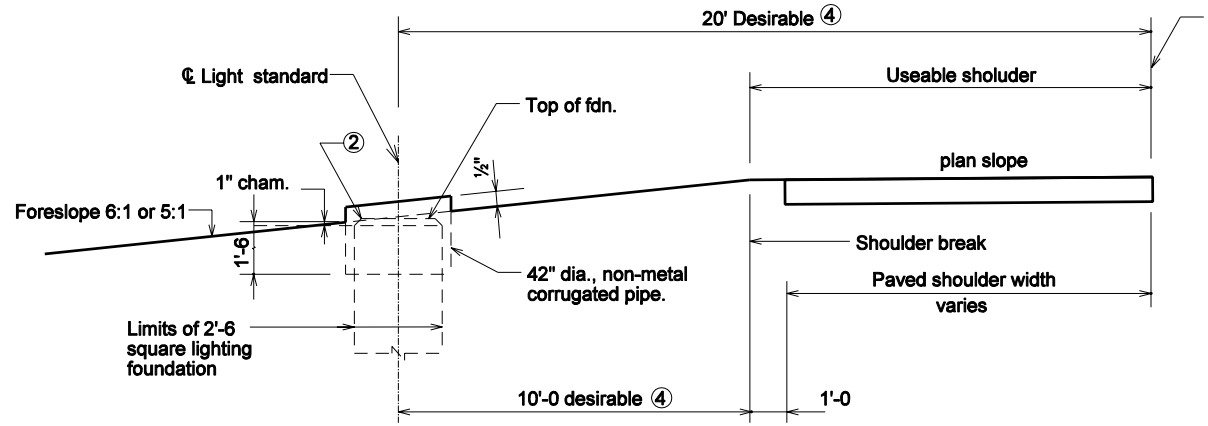

ELEVATION, FILL SECTION, 6:1 OR 5:1 SLOPE, SQUARE FOUNDATION

INDIANA DEPARTMENT OF TRANSPORTATION

LIGHT STANDARD FOUNDATION GRADING FILL SECTION

SEPTEMBER 2005

STANDARD DRAWING NO. E 807-LTFD-02

RICHARD L. VanCLEAVE REGISTERED No. 9750 STATE OF INDIANA PROFESSIONAL ENGINEER

DESIGN STANDARDS ENGINEER

/s/ Richard L. VanCleave 9-01-05
DESIGN STANDARDS ENGINEER DATE

/s/ Richard K. Smutzer 9-01-05
CHIEF HIGHWAY ENGINEER DATE

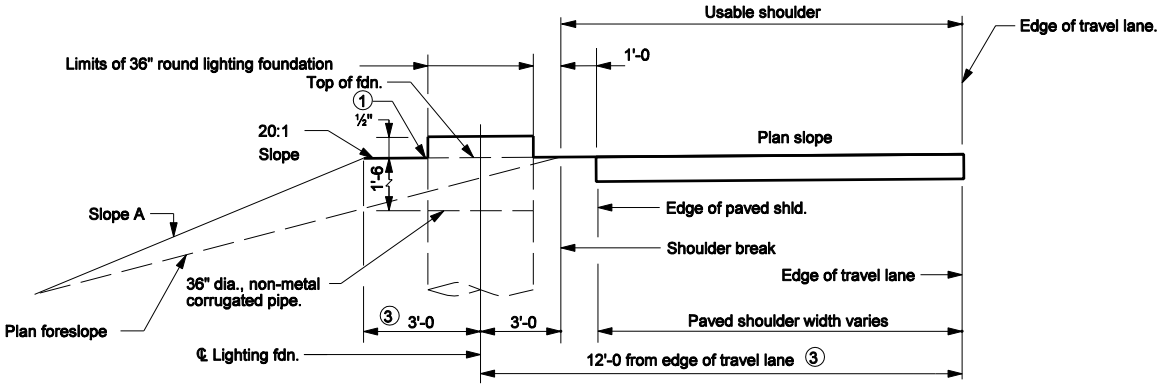

ELEVATION, 4:1 OR 3:1 SLOPE

Notes:

① See Standard Drawing E 807-LTFD-05 for General Notes.

2. Transformer base door shall face the right-of-way line.

③ Use which ever gives the greatest offset distance from the edge of the travel lane.

Plan foreslope	A
4:1	3:1 Desirable
3:1	2.5:1 Desirable

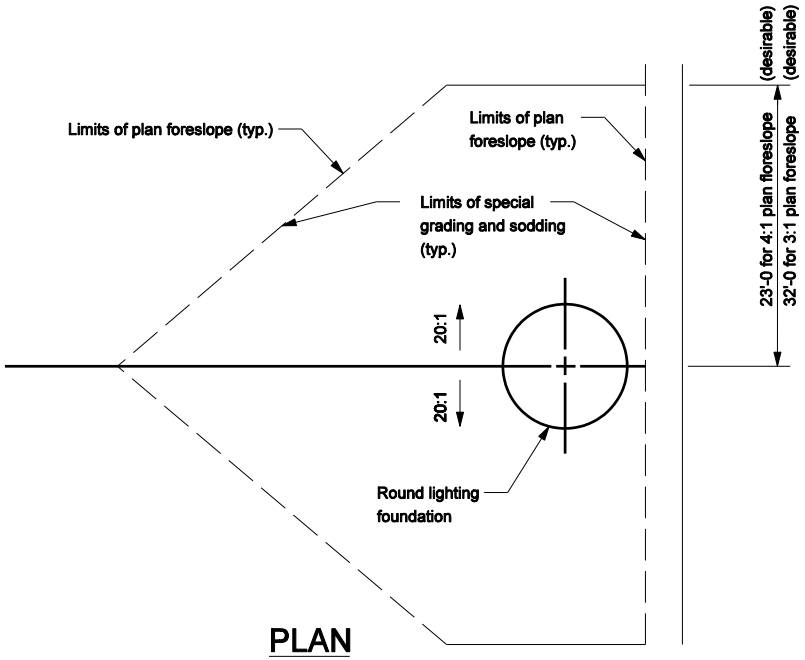

PLAN

INDIANA DEPARTMENT OF TRANSPORTATION

LIGHT STANDARD ROUND FDN. TNT. FILL SECTION FORESLOPE 4:1 OR 3:1

September 2005

STANDARD DRAWING NO. E 807-LTFD-03

RICHARD L. VanCLEAVE REGISTERED No. 9750 STATE OF INDIANA PROFESSIONAL ENGINEER

DESIGN STANDARDS ENGINEER

/s/ Richard L. VanCleave 9-01-05
DESIGN STANDARDS ENGINEER DATE

/s/ Richard K. Smutzer 9-01-05
CHIEF HIGHWAY ENGINEER DATE

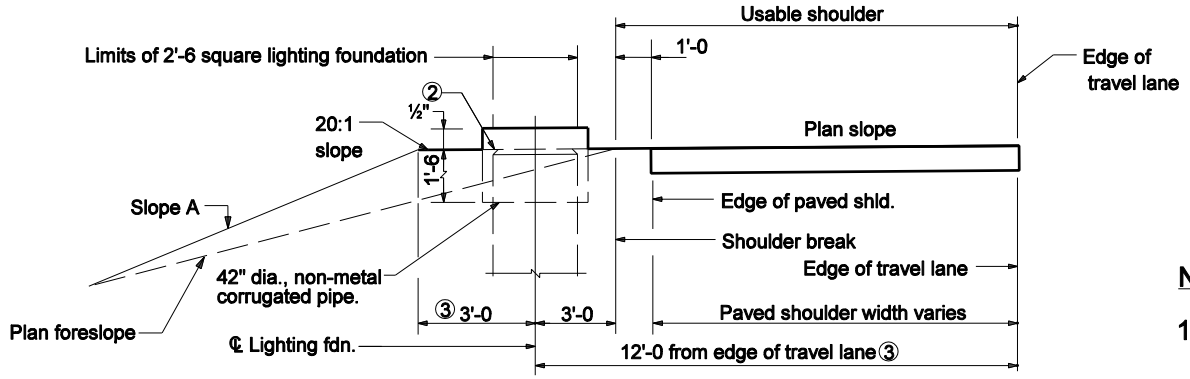

ELEVATION 4:1 OR 3:1 SLOPE

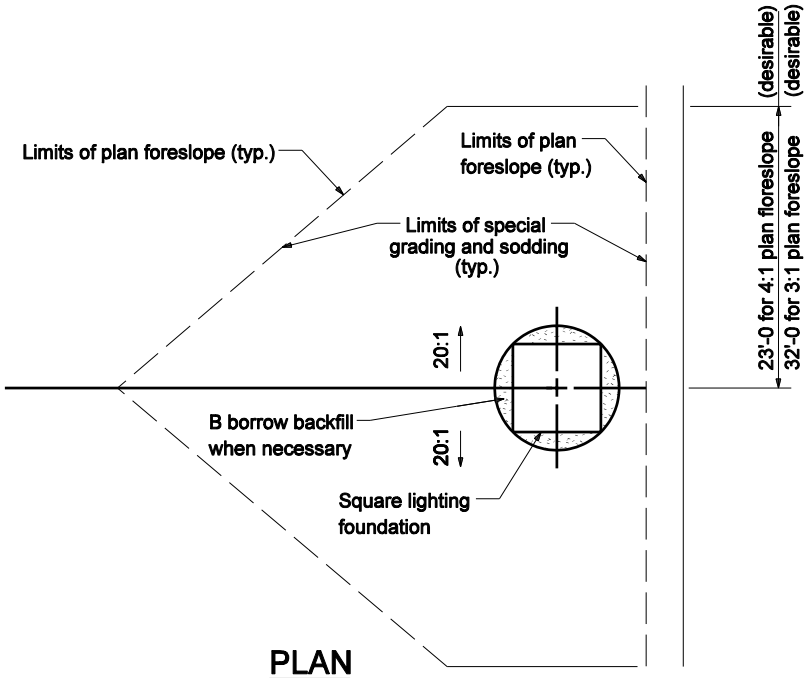

PLAN

Notes:

1. Transformer base door shall face the right-of-way line.

② See Standard Drawing E 807-LTFD-05 for General Notes.

3. Use whichever gives the greatest offset distance from the edge of the travel lane.

Plan foreslope	A
4:1	3:1 Desirable
3:1	2.5:1 Desirable

INDIANA DEPARTMENT OF TRANSPORTATION

LIGHT STANDARD SQUARE FDN. TMT. FILL SECTION FORESLOPE 4:1 OR 3:1

SEPTEMBER 2005

STANDARD DRAWING NO. E 807-LTFD-03A

RICHARD L. VanCLEAVE REGISTERED No. 9750 STATE OF INDIANA PROFESSIONAL ENGINEER

DESIGN STANDARDS ENGINEER

/s/ Richard L. VanCleave 9-01-05
DESIGN STANDARDS ENGINEER DATE

/s/ Richard K. Smutzer 9-01-05
CHIEF HIGHWAY ENGINEER DATE

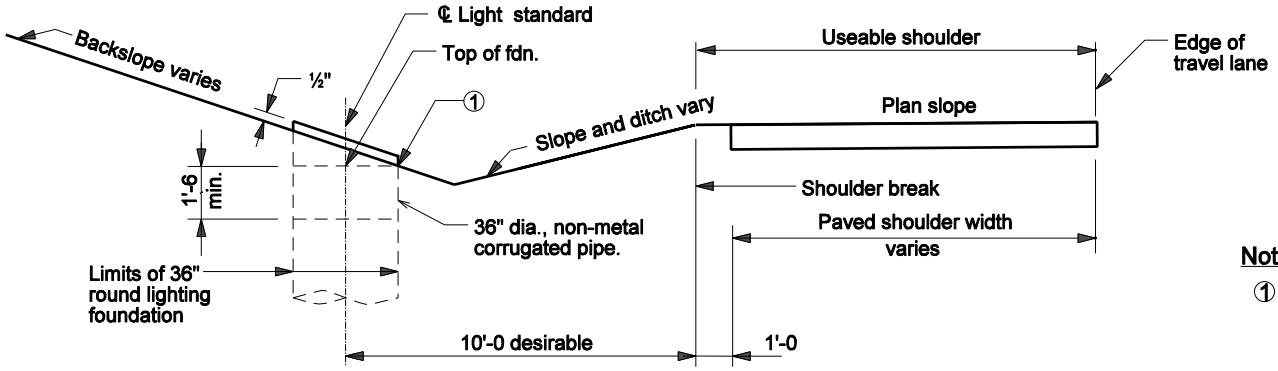

ELEVATION, CUT SECTION, ROUND FOUNDATION

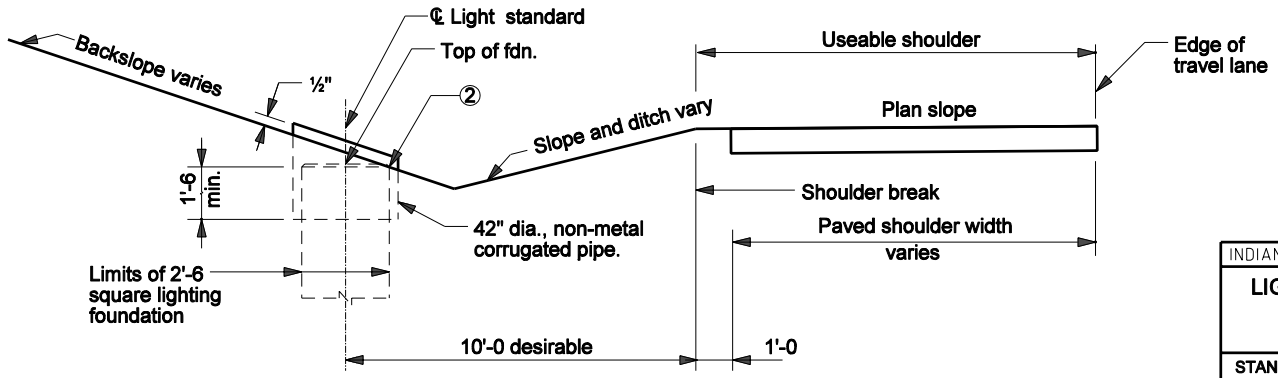

ELEVATION, CUT SECTION, SQUARE FOUNDATION

Notes:

①② See Standard Drawing E 807-LTFD-05 for General Notes.

3. Transformer base door shall face roadway.

4. Foundation shall not be installed in ditch flow line.

INDIANA DEPARTMENT OF TRANSPORTATION

LIGHT STANDARD FOUNDATION GRADING CUT SECTION

SEPTEMBER 2005

STANDARD DRAWING NO. E 807-LTFD-04

RICHARD L. VanCLEAVE REGISTERED No. 9750 STATE OF INDIANA PROFESSIONAL ENGINEER

DESIGN STANDARDS ENGINEER

/s/ Richard L. VanCleave 9-01-05
DESIGN STANDARDS ENGINEER DATE

/s/ Richard K. Smutzer 9-01-05
CHIEF HIGHWAY ENGINEER DATE

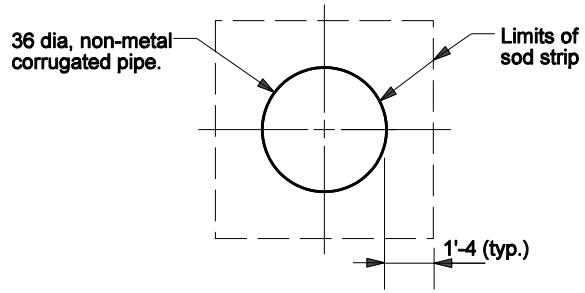

PLAN, ROUND FOUNDATION

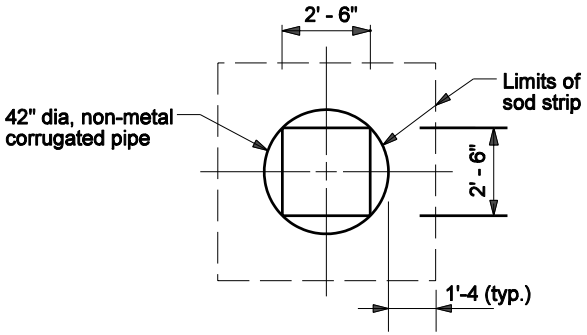

PLAN, SQUARE FOUNDATION

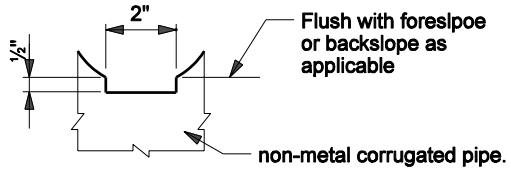

DRAINAGE NOTCH

Notes:

1. Drainage notch shall follow the slope of the ground.

INDIANA DEPARTMENT OF TRANSPORTATION

LIGHT STANDARD FOUNDATION GRADING DETAILS

SEPTEMBER 2005

STANDARD DRAWING NO. E 807-LTFD-04A

RICHARD L. VanCLEAVE REGISTERED No. 9750 STATE OF INDIANA PROFESSIONAL ENGINEER

DESIGN STANDARDS ENGINEER

/s/ Richard L. VanCleave 9-01-05
DESIGN STANDARDS ENGINEER DATE

/s/ Richard K. Smutzer 9-01-05
CHIEF HIGHWAY ENGINEER DATE

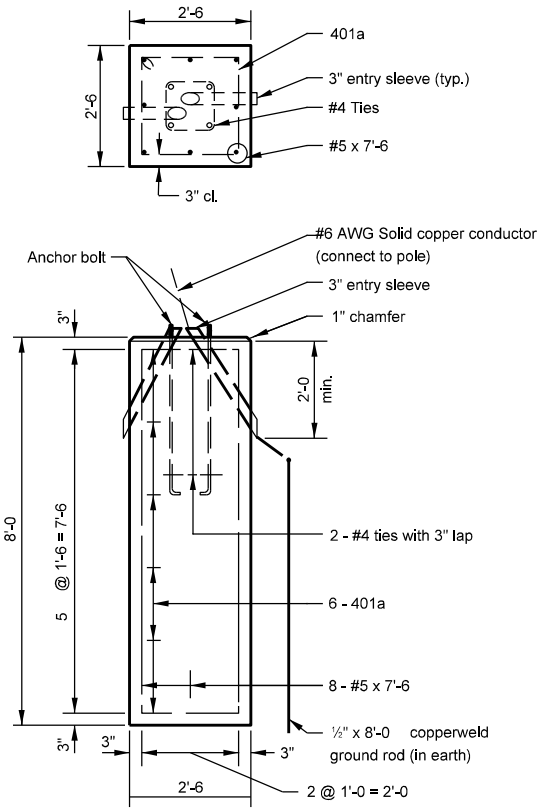

SQUARE FOUNDATION DETAIL

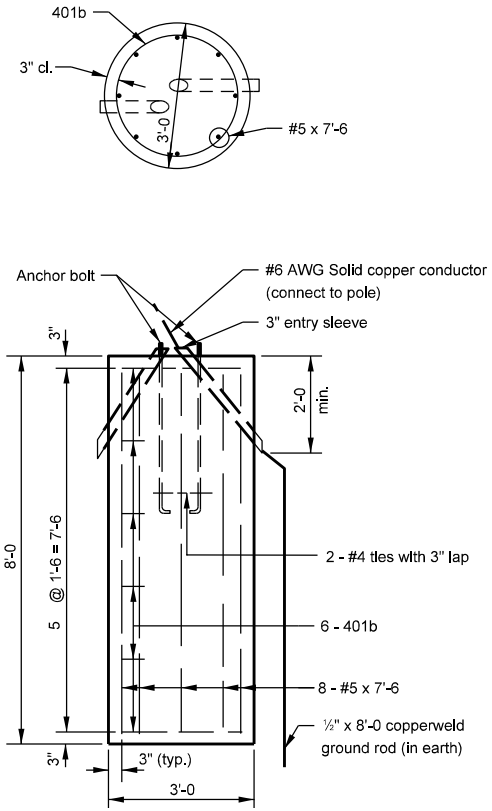

ROUND FOUNDATION DETAIL

GENERAL NOTES

① Top of lighting foundation shall be flush with foreslope at this point.

② Base of chamfer at top of lighting foundation shall be flush with foreslope at this point.

3. See Standard Drawing E 801-LTFD-04A for plan views of pipe placement and sodding.
4. Low exposd end of pipe shall have drainage notch as shown on Standard Drawing E 807-LTFD-04A.
5. Arrows shall be engraved on top of foundation to indicate direction of cable duct run.
6. All reinforcing bars shall be epoxy coated.

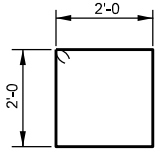

401a x 8'-10

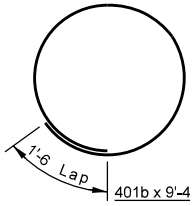

401b x 9'-4

INDIANA DEPARTMENT OF TRANSPORTATION

LIGHT FOUNDATION

SEPTEMBER 2002

STANDARD DRAWING NO. E 807-LTFD-05

RICHARD L. VanCLEAVE REGISTERED No. 9750 STATE OF INDIANA PROFESSIONAL ENGINEER

DESIGN STANDARDS ENGINEER

/s/ Richard L. VanCleave 9-03-02
DESIGN STANDARDS ENGINEER DATE

/s/ Richard K. Smutzer 9-03-02
CHIEF HIGHWAY ENGINEER DATE

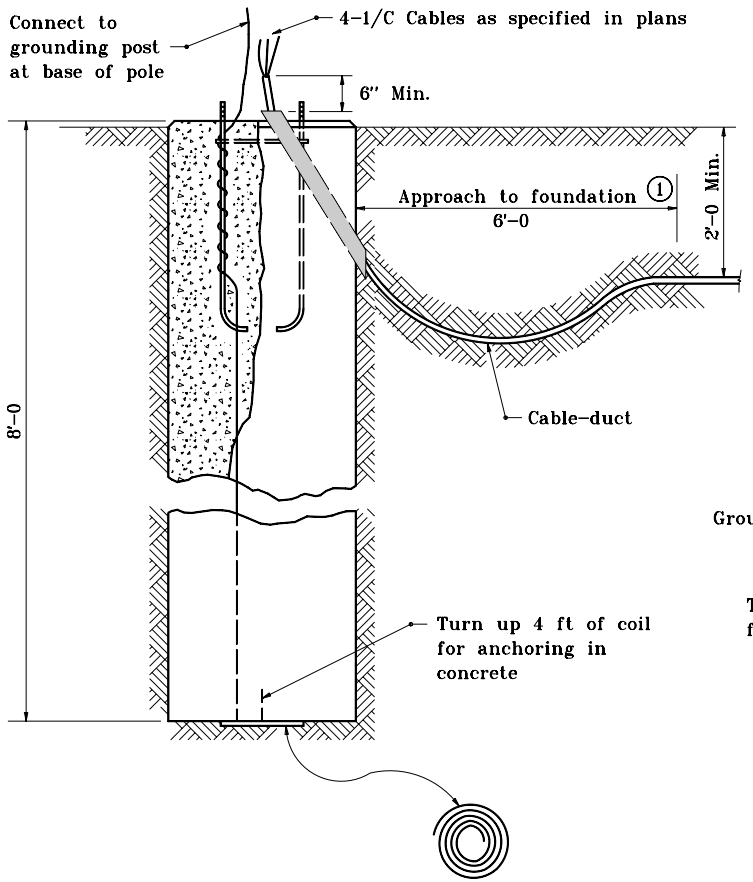

DETAIL OF COIL

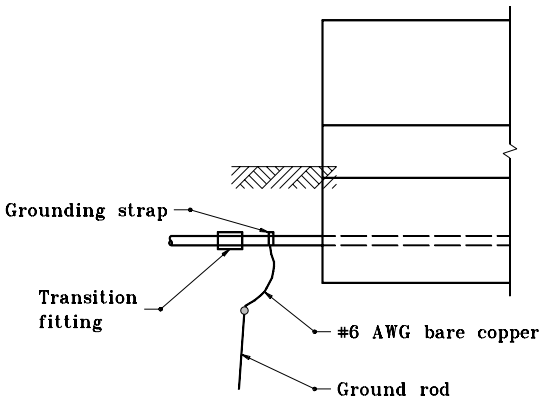

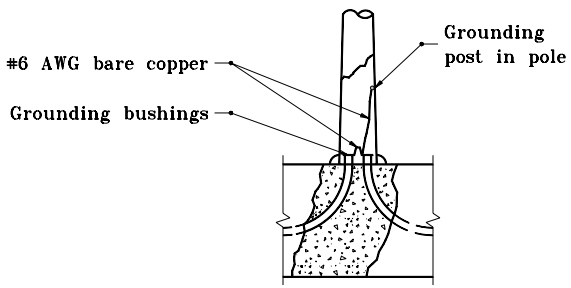

BRIDGE GROUNDING

GENERAL NOTES

① The 6 ft approach to foundation shall be trenched.

2. Bottom of trench shall be graded so as to provided a smooth, uniform ramp to the entry sleeve of the foundation.

3. Each cable–duct shall have its own entry sleeve. There shall be at least two entry sleeves per footing.

4. Coil to be of #6 AWG copper approximately 15 ft long.

5. Place felt between concrete and coil to prevent bonding.

6. Coil method of grounding may be used with precast foundation.

INDIANA DEPARTMENT OF TRANSPORTATION

LIGHT FOUNDATION

SEPTEMBER 2000

STANDARD DRAWING NO. **E 807–LTFD–06**

ANTHONY L. UREMOVICH REGISTERED No. 18095 STATE OF INDIANA PROFESSIONAL ENGINEER

DESIGN STANDARDS ENGINEER

/s/ Anthony L. Uremovich 9–01–00
DESIGN STANDARDS ENGINEER — DATE

/s/ Firooz Zandi 9–01–00
CHIEF HIGHWAY ENGINEER — DATE

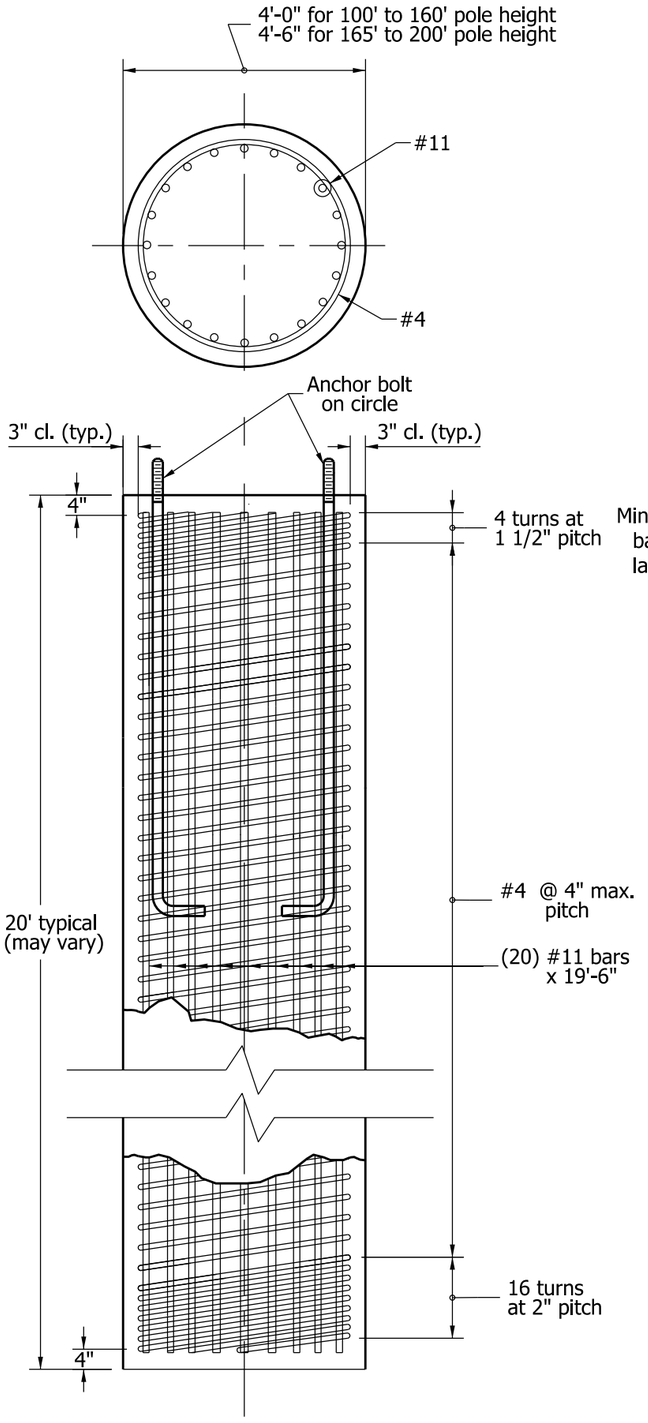

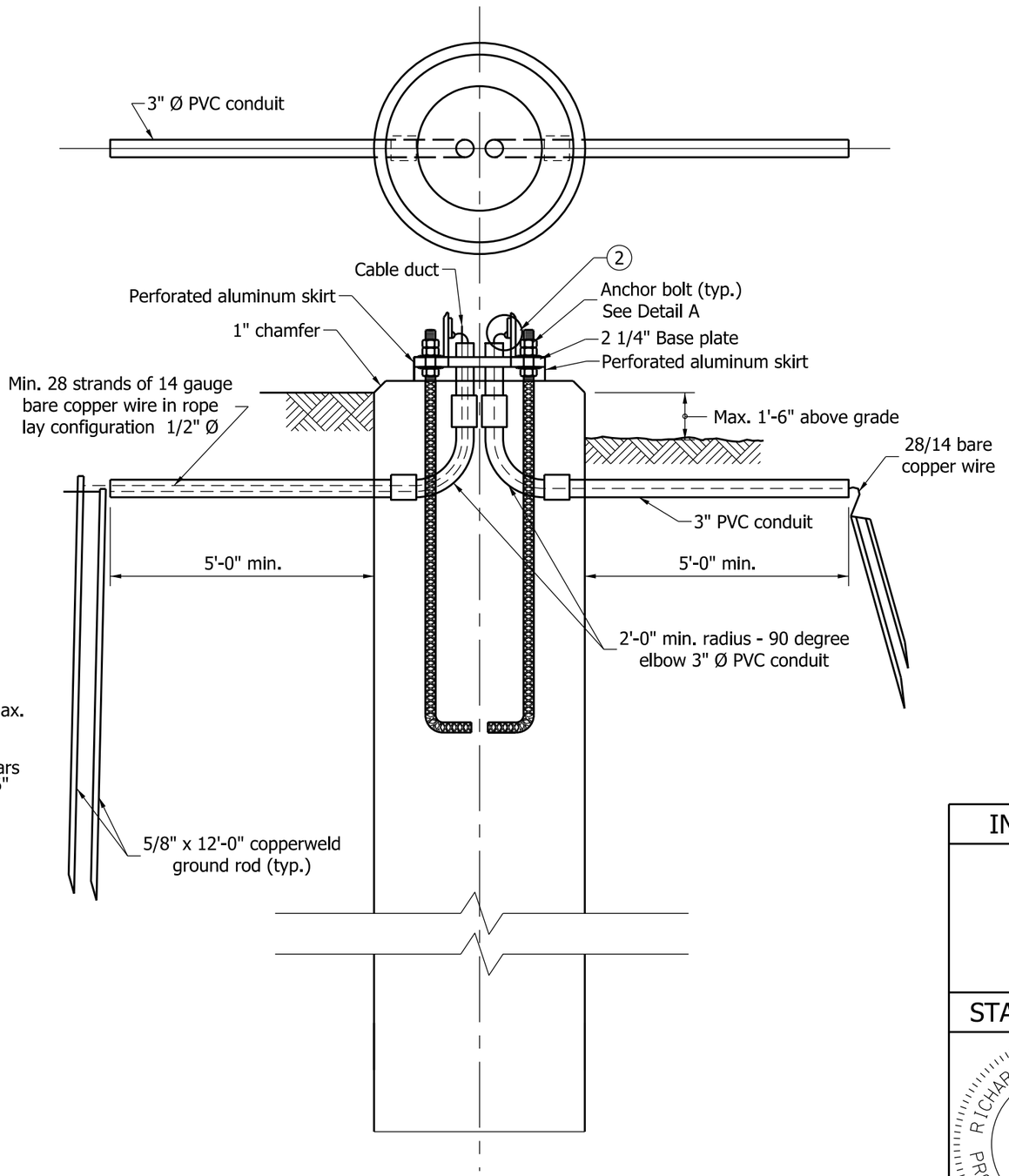

NOTES:

1. An arrow or arrows shall be imprinted onto the top of the foundation to indicate the direction of the cable-duct run.

(2) See Standard Drawing E807-LTLR-02 for details.

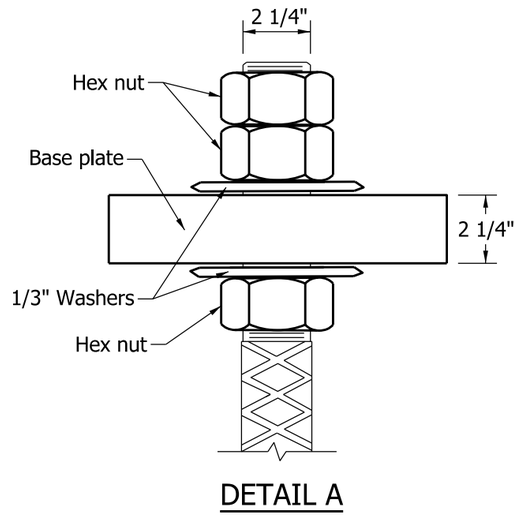

DETAIL A

INDIANA DEPARTMENT OF TRANSPORTATION

HIGH MAST TOWER FOUNDATION

SEPTEMBER 2010

STANDARD DRAWING NO. E 807-LTFD-07

RICHARD L. VanCLEAVE REGISTERED No. 9750 STATE OF INDIANA PROFESSIONAL ENGINEER

DESIGN STANDARDS ENGINEER

/s/ Richard L. VanCleave 09/01/10
DESIGN STANDARDS ENGINEER DATE

/s/ Mark A. Miller 09/01/10
CHIEF HIGHWAY ENGINEER DATE

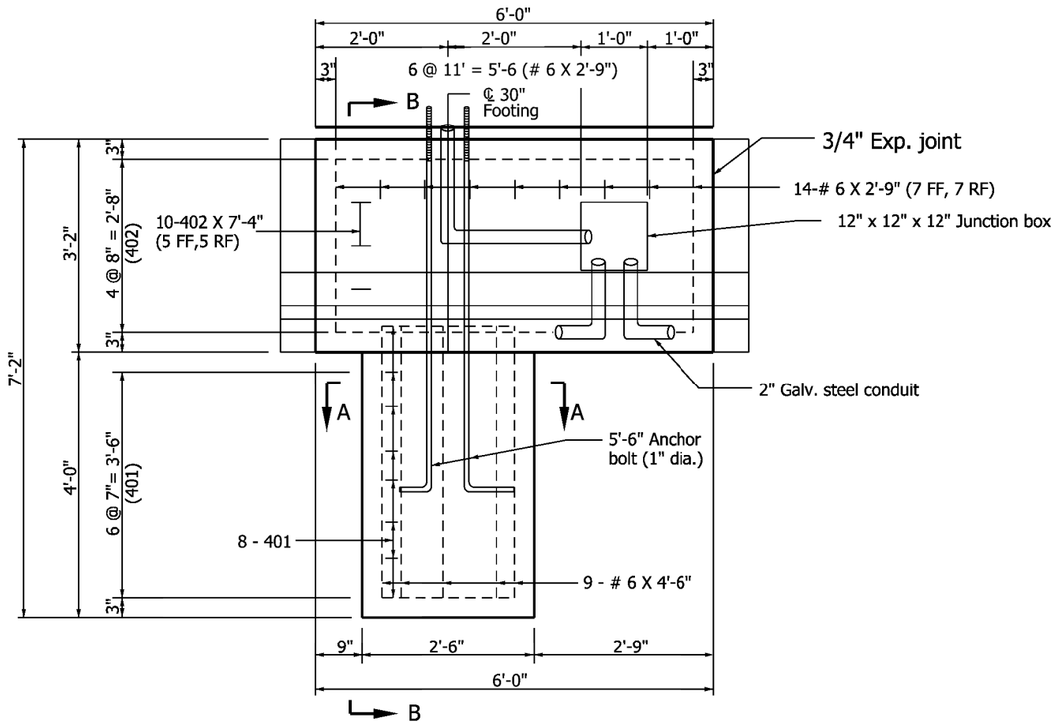

ELEVATION

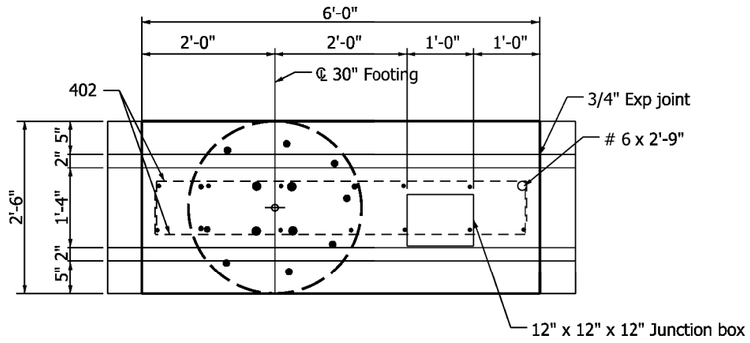

PLAN

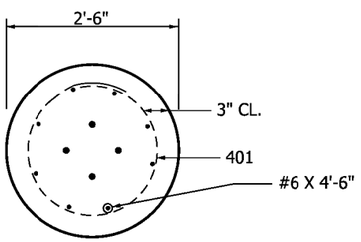

SECTION A-A

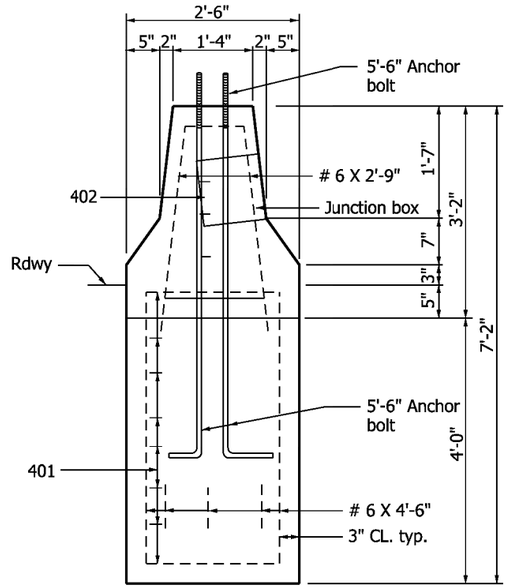

SECTION B-B

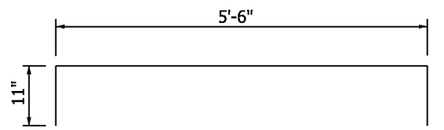

402 X 7'-4"

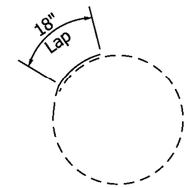

401 X 7'-9"

Notes:

1. The 2" galvanized steel conduit and junction box can be installed in the median shoulder. The junction box must be in front of the light foundation.
2. Field cut reinforcing bars to accomodate junction box.

INDIANA DEPARTMENT OF TRANSPORTATION

CONVENTIONAL LIGHT FOUNDATION FOR 33" CONCRETE MEDIAN WALL INSTALLATION SEPTEMBER 2009

STANDARD DRAWING NO. E 807-LTFD-09

RICHARD L. VanCLEAVE REGISTERED No. 9750 STATE OF INDIANA PROFESSIONAL ENGINEER

DESIGN STANDARDS ENGINEER

/s/ Richard L.VanCleave 09/01/09
DESIGN STANDARDS ENGINEER DATE

/s/ Mark A. Miller 09/01/09
CHIEF HIGHWAY ENGINEER DATE

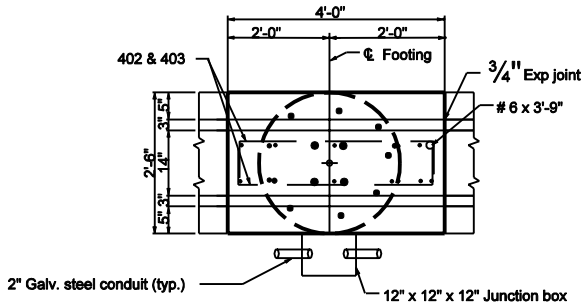

PLAN

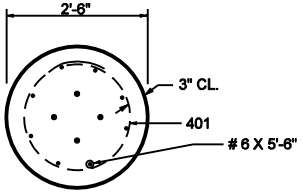

SECTION A-A

Notes:

1. Junction box shall meet the following specifications:
   a. Material: Polymer concrete
   b. Color: Concrete gray
   c. Cover rating: 20,000 lbs.

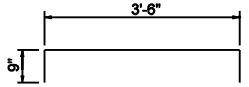

403 X 5'-0"

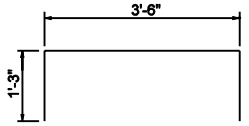

402 X 6'-0"

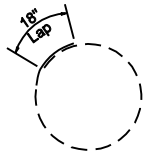

401 X 8'-10"

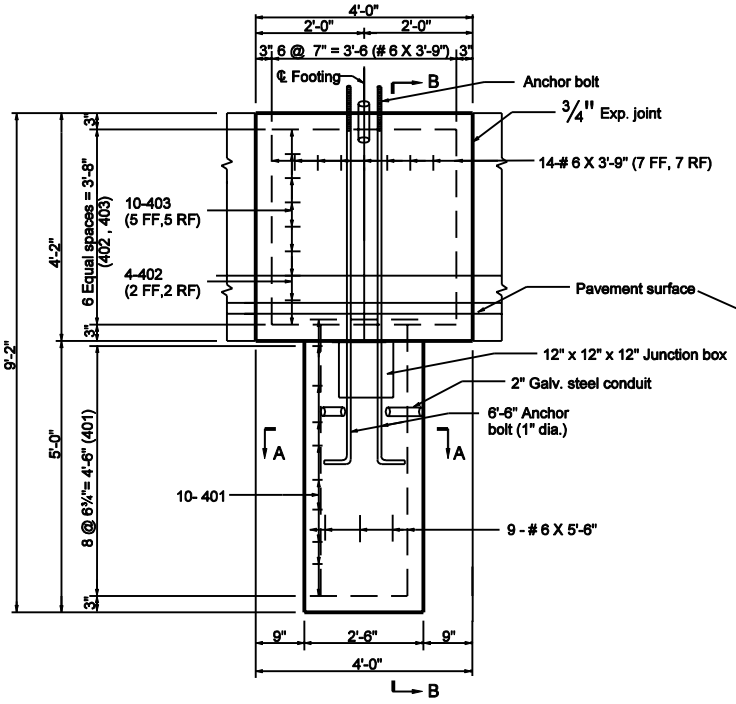

ELEVATION

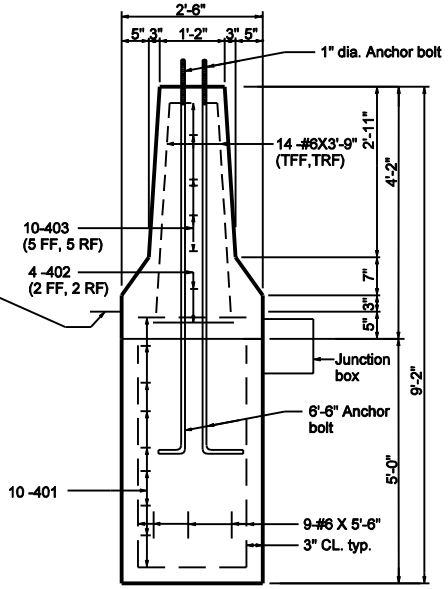

SECTION B-B

INDIANA DEPARTMENT OF TRANSPORTATION

CONVENTIONAL LIGHT FOUNDATION FOR 45" CONCRETE MEDIAN WALL INSTALLATION.

SEPTEMBER 2002

STANDARD DRAWING NO. E 807-LTFD-10

RICHARD L. VanCLEAVE REGISTERED No. 9750 STATE OF INDIANA PROFESSIONAL ENGINEER

DESIGN STANDARDS ENGINEER

/s/ Richard L VanCleave — DESIGN STANDARDS ENGINEER — 9-03-02 DATE

/s/ Richard K. Smutzer — CHIEF HIGHWAY ENGINEER — 9-03-02 DATE

GENERAL NOTES

1. Alternate handhole minimum size shall be 1'–7 x 2'–6 x 1'–10 depth with 2 in. lid thickness.
2. Approximate weight for cast iron ring and cover shall be 320 lb.

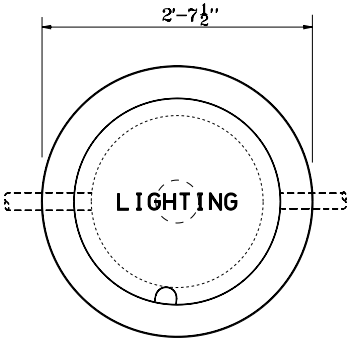

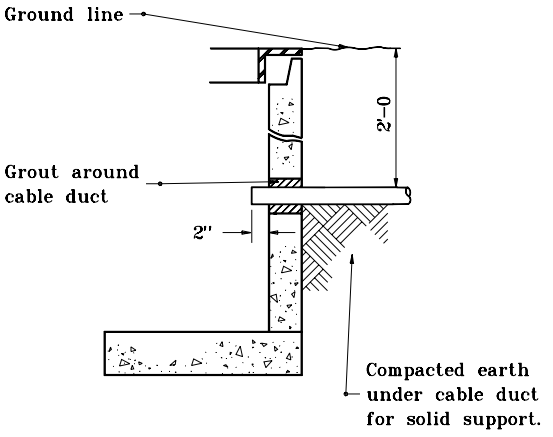

CABLE DUCT ENTERING HANDHOLE

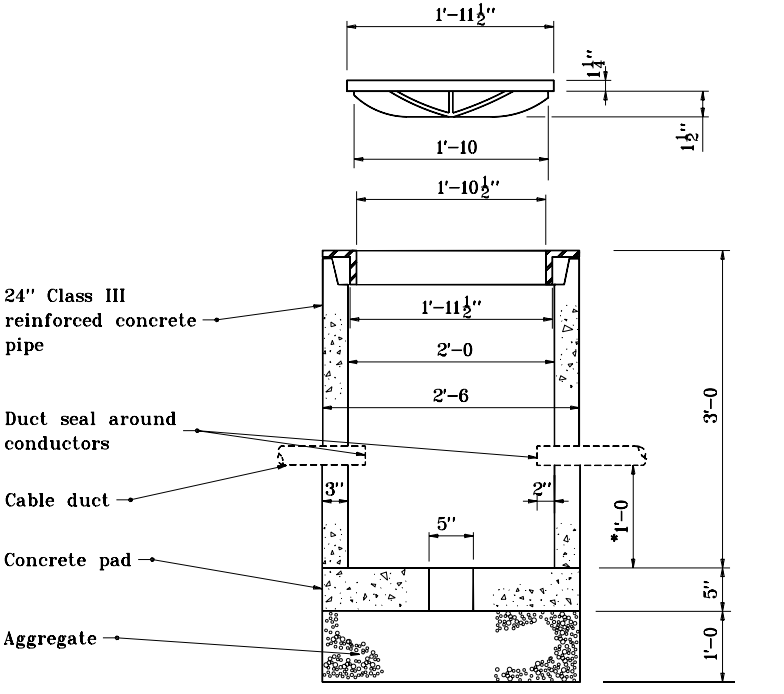

* 4" min. for alternate handhole

STREET & ALLEY TYPE HANDHOLE

INDIANA DEPARTMENT OF TRANSPORTATION

LIGHT HANDHOLE DETAILS

MARCH 1995

STANDARD DRAWING NO. **E 807–LTHH–01**

ANTHONY L. UREMOVICH REGISTERED No. 18095 STATE OF INDIANA PROFESSIONAL ENGINEER

DESIGN STANDARDS ENGINEER

DETAILS PLACED IN THIS FORMAT 7-27-99

/s/ Anthony L. Uremovich 7-27-99
DESIGN STANDARDS ENGINEER — DATE

/s/ Firooz Zandi 7-27-99
CHIEF HIGHWAY ENGINEER — DATE

ORIGINALLY APPROVED 3-01-95

GENERAL NOTES

1. For multiple compression fitting and insulating link details, see Standard Drawing No. E 803-SNWR-04.

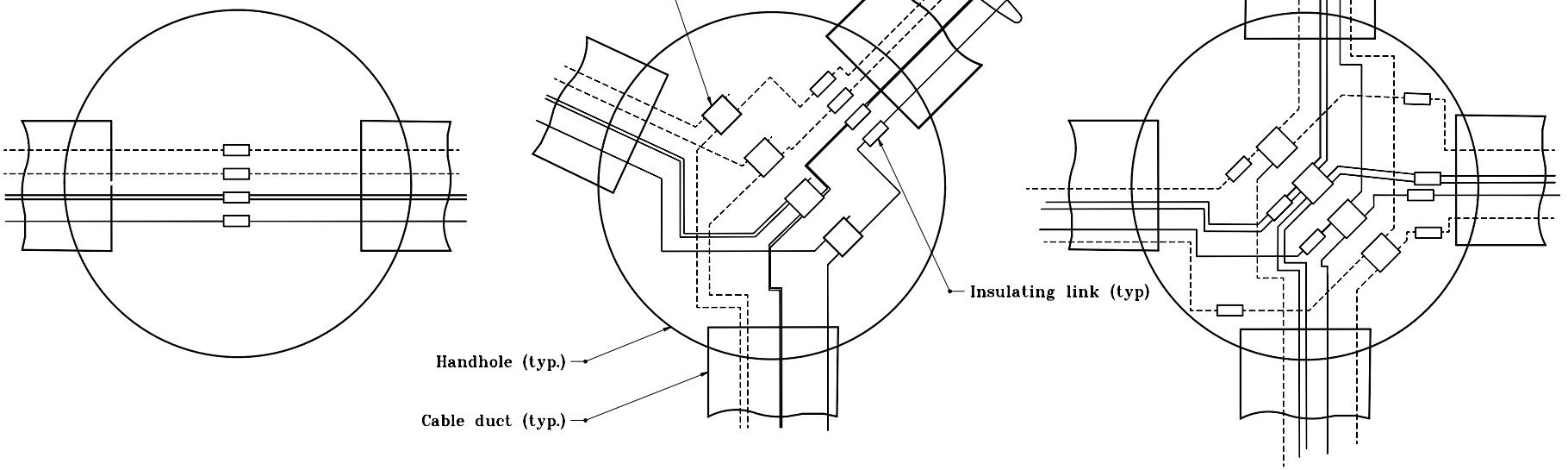

Type A **Type B** **Type C**

HANDHOLE CONNECTION DIAGRAM

INDIANA DEPARTMENT OF TRANSPORTATION

LIGHT HANDHOLE CONNECTIONS

MARCH 1995

STANDARD DRAWING NO. **E 807-LTHH-02**

ANTHONY L. UREMOVICH REGISTERED No. 18095 STATE OF INDIANA PROFESSIONAL ENGINEER

DESIGN STANDARDS ENGINEER

DETAILS PLACED IN THIS FORMAT	11-15-99
/s/ Anthony L. Uremovich DESIGN STANDARDS ENGINEER	11-15-99 DATE
/s/ Firooz Zandi CHIEF HIGHWAY ENGINEER	11-15-99 DATE
ORIGINALLY APPROVED	3-01-95

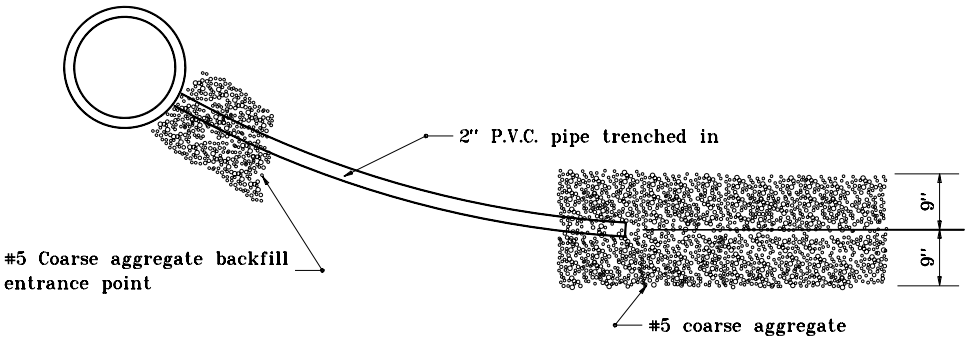

PLAN VIEW

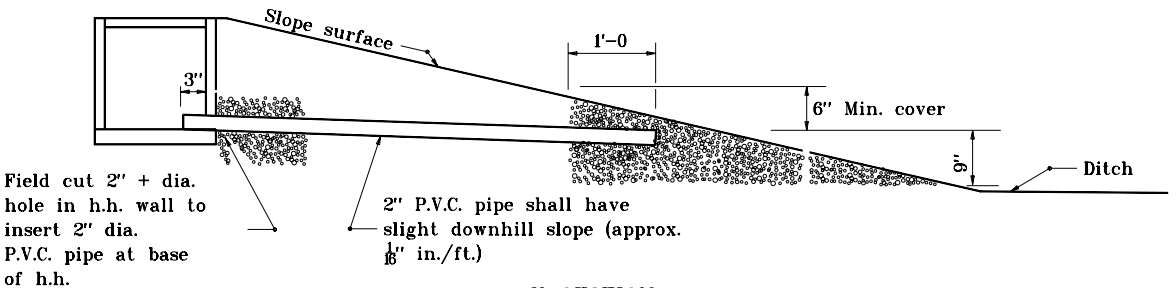

X-SECTION

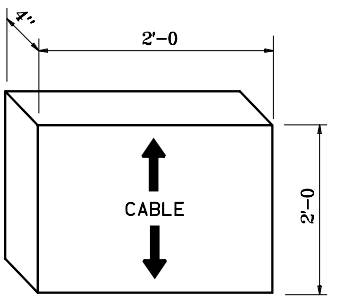

CABLE MARKER

HANDHOLE DRAIN DETAIL

INDIANA DEPARTMENT OF TRANSPORTATION

LIGHT HANDHOLE DRAIN & CABLE MARKER

MARCH 1995

STANDARD DRAWING NO. **E 807-LTHH-03**

ANTHONY L. UREMOVICH REGISTERED No. 18095 STATE OF INDIANA PROFESSIONAL ENGINEER

DESIGN STANDARDS ENGINEER

DETAILS PLACED IN THIS FORMAT	11-15-99
/s/ Anthony L. Uremovich DESIGN STANDARDS ENGINEER	11-15-99 DATE
/s/ Firooz Zandi CHIEF HIGHWAY ENGINEER	11-15-99 DATE
ORIGINALLY APPROVED	3-01-95

INDEX

SHEET NO.	SUBJECT
1	Highway Illumination Tower Index
2	Highway Illumination Tower
3	Highway Illumination Tower Wiring Details
4	Highway Illumination Tower Bottom Latch And Winch Details
5	Highway Illumination Tower Winch Drive Details
6	Highway Illumination Tower Power Unit Mounting Bracket Details
7	Highway Illumination Tower Handhole Details
8	Highway Illumination Tower Luminaire Ring Assembly
9	Highway Illumination Tower ID Plate
10	Highway Illumination Tower Perforated Aluminum Skirt
11	Highway Illumination Tower Concrete Pad
12	Highway Illumination Tower Concrete Pad With Retaining Wall
13	Highway Illumination Tower Pole Data Schedule 100' - 155'
14	Highway Illumination Tower Pole Data Schedule 160' - 200'

INDIANA DEPARTMENT OF TRANSPORTATION

HIGHWAY ILLUMINATION TOWER
INDEX

SEPTEMBER 2017

STANDARD DRAWING NO. E 807-LTHI-01

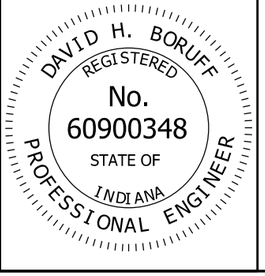

/s/ David H. Boruff *03/20/17*
DESIGN STANDARDS ENGINEER DATE

/s/ John Leckie *03/20/17*
CHIEF ENGINEER DATE

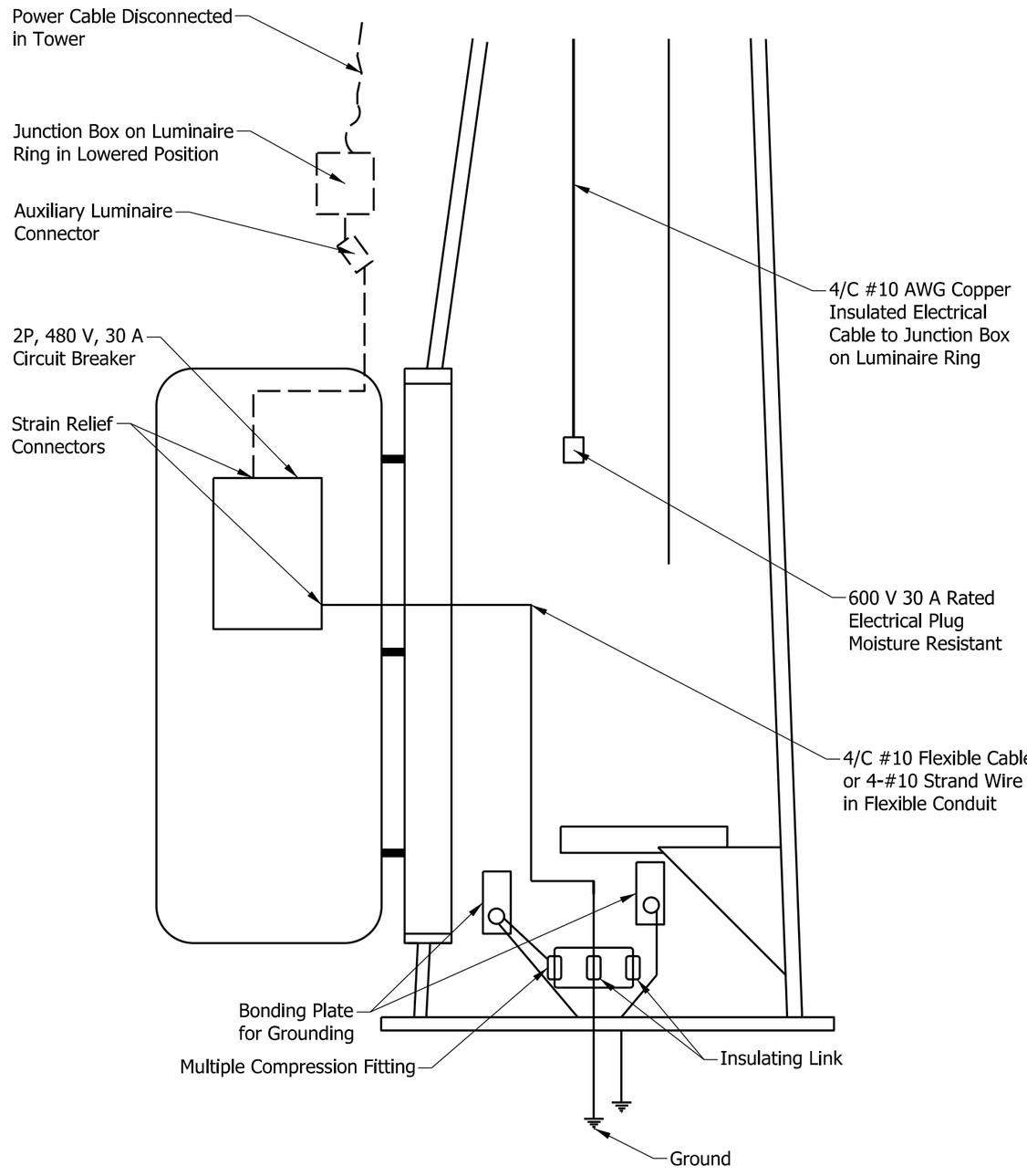

DETAIL

INDIANA DEPARTMENT OF TRANSPORTATION

HIGHWAY ILLUMINATION TOWER
CIRCUIT BREAKER AND
GROUNDING

SEPTEMBER 2017

STANDARD DRAWING NO. E 807-LTHI-02

DAVID H. BORUFF
REGISTERED
No. 60900348
STATE OF INDIANA
PROFESSIONAL ENGINEER

/s/ David H. Boruff 03/20/17
DESIGN STANDARDS ENGINEER DATE

/s/ John Leckie 03/20/17
CHIEF ENGINEER DATE

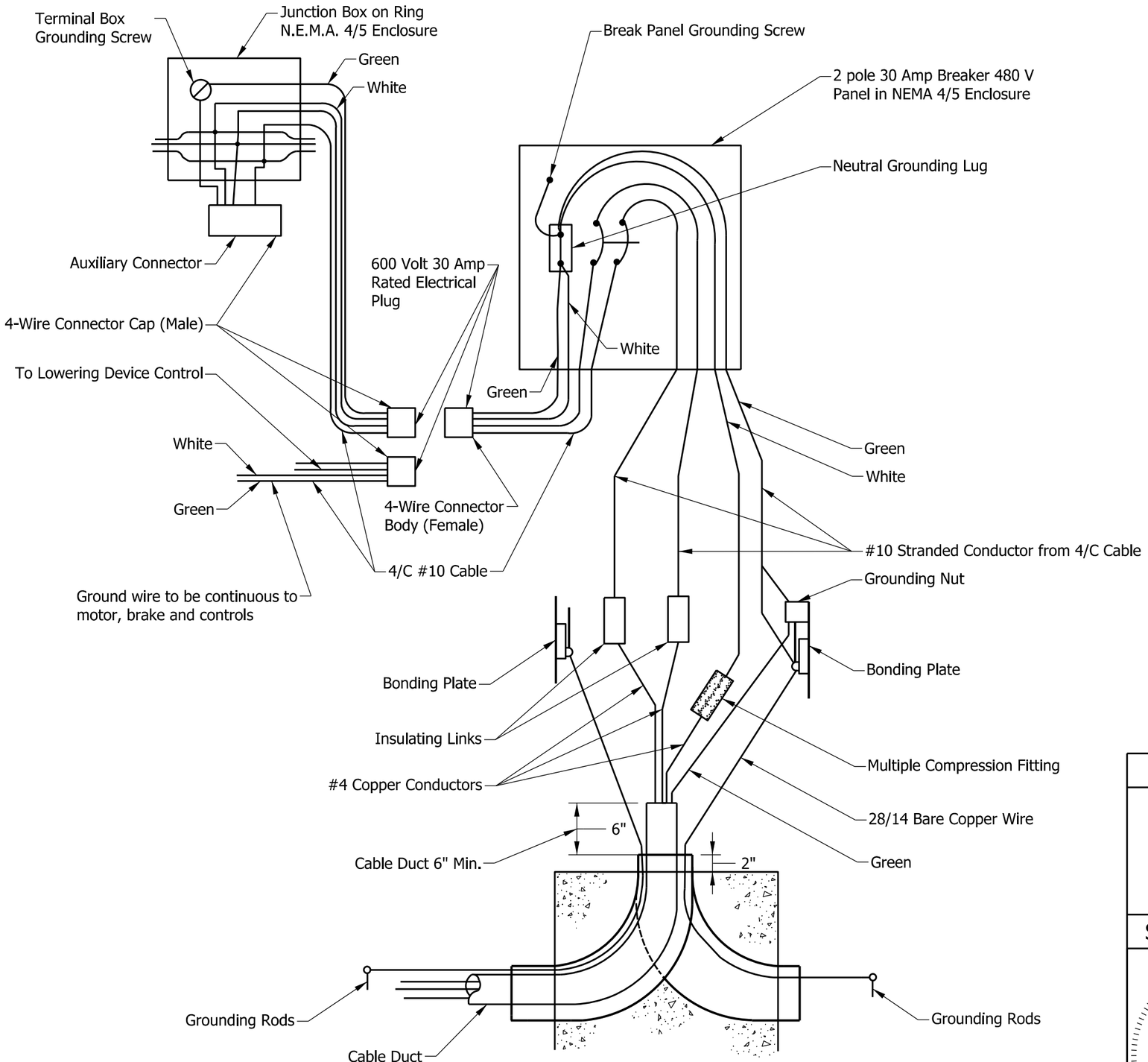

WIRING DIAGRAM

INDIANA DEPARTMENT OF TRANSPORTATION

HIGHWAY ILLUMINATION TOWER
WIRING DETAILS

SEPTEMBER 2017

STANDARD DRAWING NO. E 807-LTHI-03

DAVID H. BORUFF
REGISTERED
No.
60900348
STATE OF
INDIANA
PROFESSIONAL ENGINEER

/s/ David H. Boruff 03/20/17
DESIGN STANDARDS ENGINEER DATE

/s/ John Leckie 03/20/17
CHIEF ENGINEER DATE

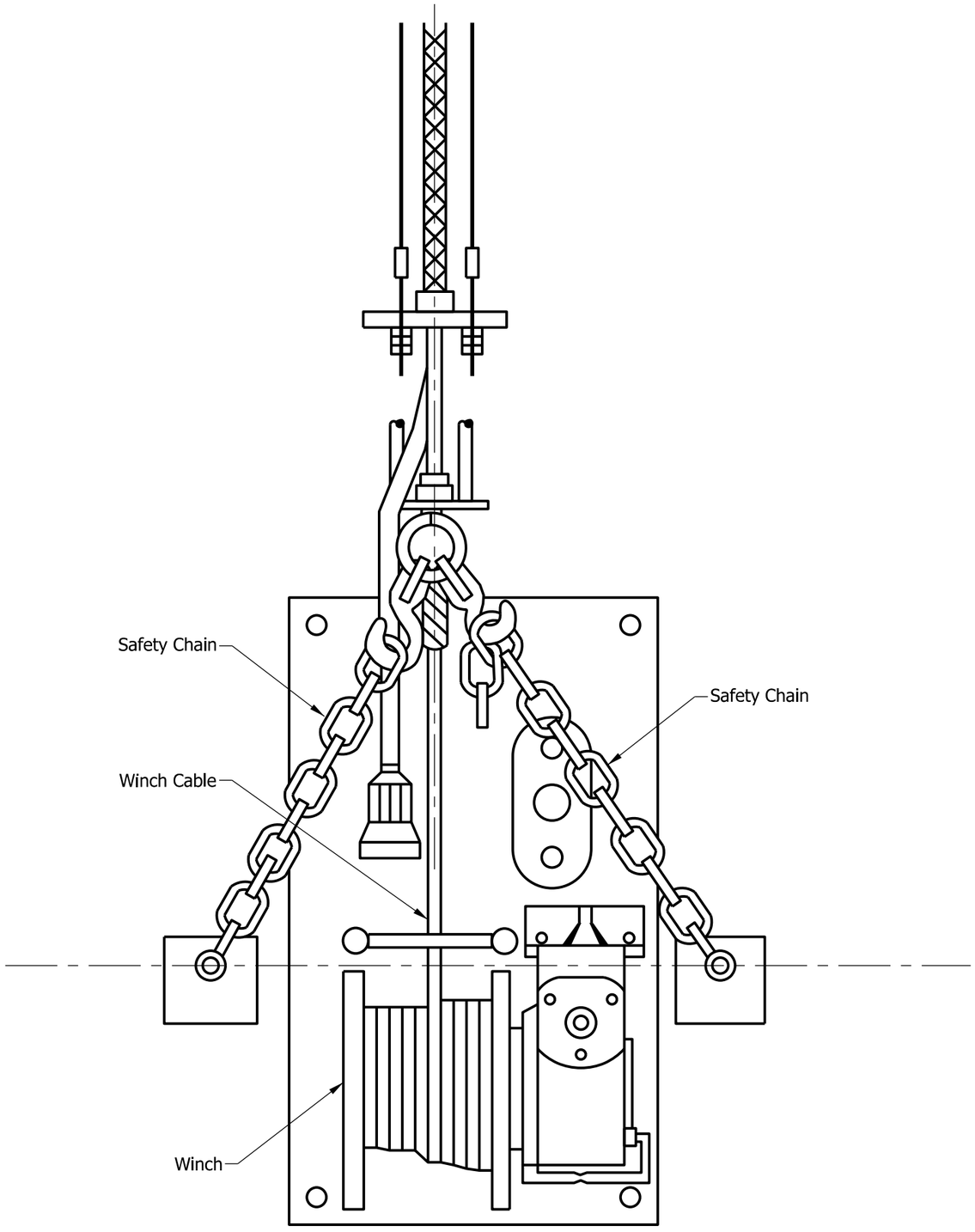

BOTTOM LATCH

INDIANA DEPARTMENT OF TRANSPORTATION

HIGHWAY ILLUMINATION TOWER BOTTOM LATCH AND WINCH DETAILS

SEPTEMBER 2017

STANDARD DRAWING NO. E 807-LTHI-04

DAVID H. BORUFF
REGISTERED
No. 60900348
STATE OF INDIANA
PROFESSIONAL ENGINEER

/s/ David H. Boruff *03/20/17*
DESIGN STANDARDS ENGINEER DATE

/s/ John Leckie *03/20/17*
CHIEF ENGINEER DATE

ITEM DESRIPTIONS

1. Hitch Pin
2. 3/4" Dia. Reversible Electric Motor 120 V, 11.5 A, 350 RPM
3. Reversing Drum Switch
4. Control Cord 20 ft, Length
5. Wiring Housing
6. Plug to Mate to Connector in Pole Base or Transformer Secondary
7. Torque Limiter Coupling
8. 3/4" Dia. Steel Shaft
9. Ballbearing Pillowblock
10. 5/8" Hex Socket Crank Shaft Coupling
11. Connector to Motor from 120 V Transformer Secondary
12. Stepdown Transformer 120 V Secondary, 1.5 kVA for 240 V, 277 V, & 480 V; 2.0 kVA for 208 V
13. 1/2" Carry Handle
14. Plug to Connector in Pole Base from Transformer Primary
15. NEMA 4-Circuit-Breaker Enclosure Field Mounted to Pole Handhole Door
16. 1/2" Dia. Mounting Bolt, 4 Req'd.
17. 0.25 in. Thick Steel Winch Plate Zinc Electroplate Finish
18. Power Unit Mounting Bracket, 0.25 in. Thick Steel Zinc Electroplate Finish
19. 5 ft Power Supply Cord and Connector
20. Winch 30:1 Gear Ratio Internal Drag Brake
21. 5/16" Dia. 7 x 19 Stainless Steel Wire Rope. Length is Pole Height + 6 ft
22. Forged Steel Swivel, 11,000 psi Ultimate Strength
23. Cord Grip
24. Winch Cable Guard
25. Winch Outboard Support

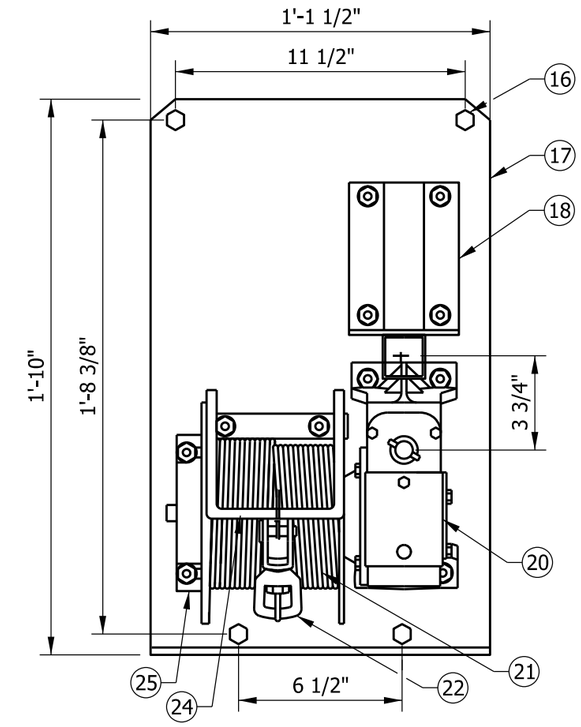

WINCH PLATE ASSEMBLY

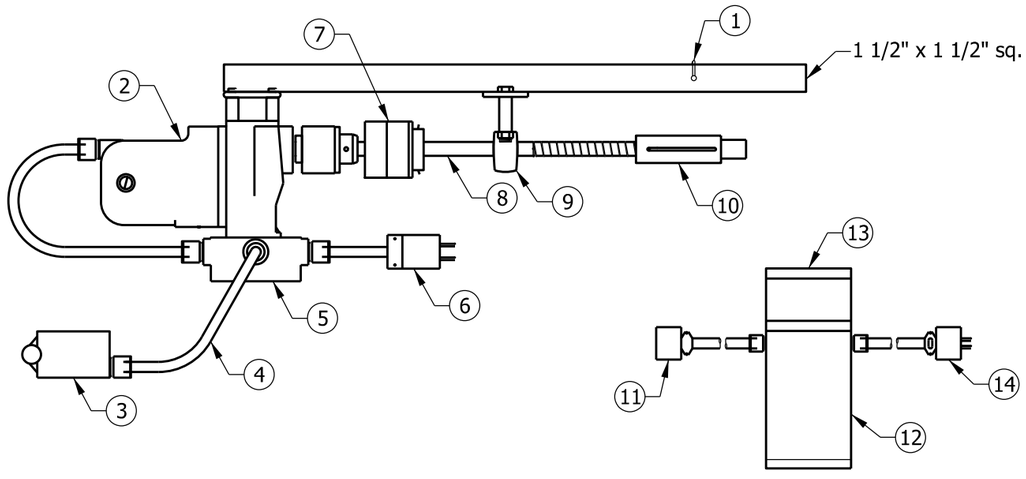

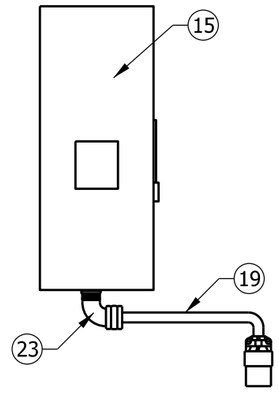

INDIANA DEPARTMENT OF TRANSPORTATION	
HIGHWAY ILLUMINATION TOWER WINCH DRIVE DETAILS SEPTEMBER 2017	
STANDARD DRAWING NO. E 807-LTHI-05	
DAVID H. BORUFF REGISTERED No. 60900348 STATE OF INDIANA PROFESSIONAL ENGINEER	*/s/ David H. Boruff* 03/20/17 DESIGN STANDARDS ENGINEER DATE */s/ John Leckie* 03/20/17 CHIEF ENGINEER DATE

NOTES:

1. Tolerances: 0 1/32", Angles ± 1/2" Unless Noted

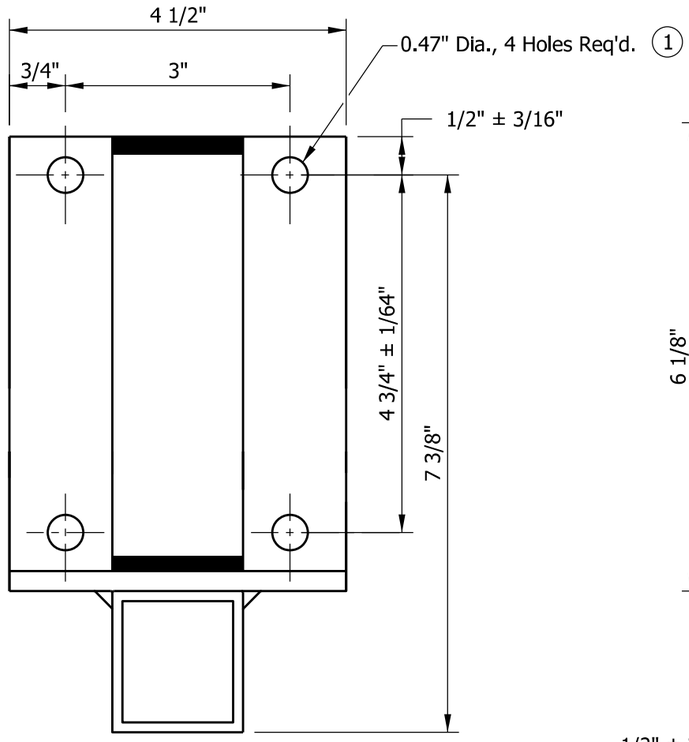

FRONT VIEW

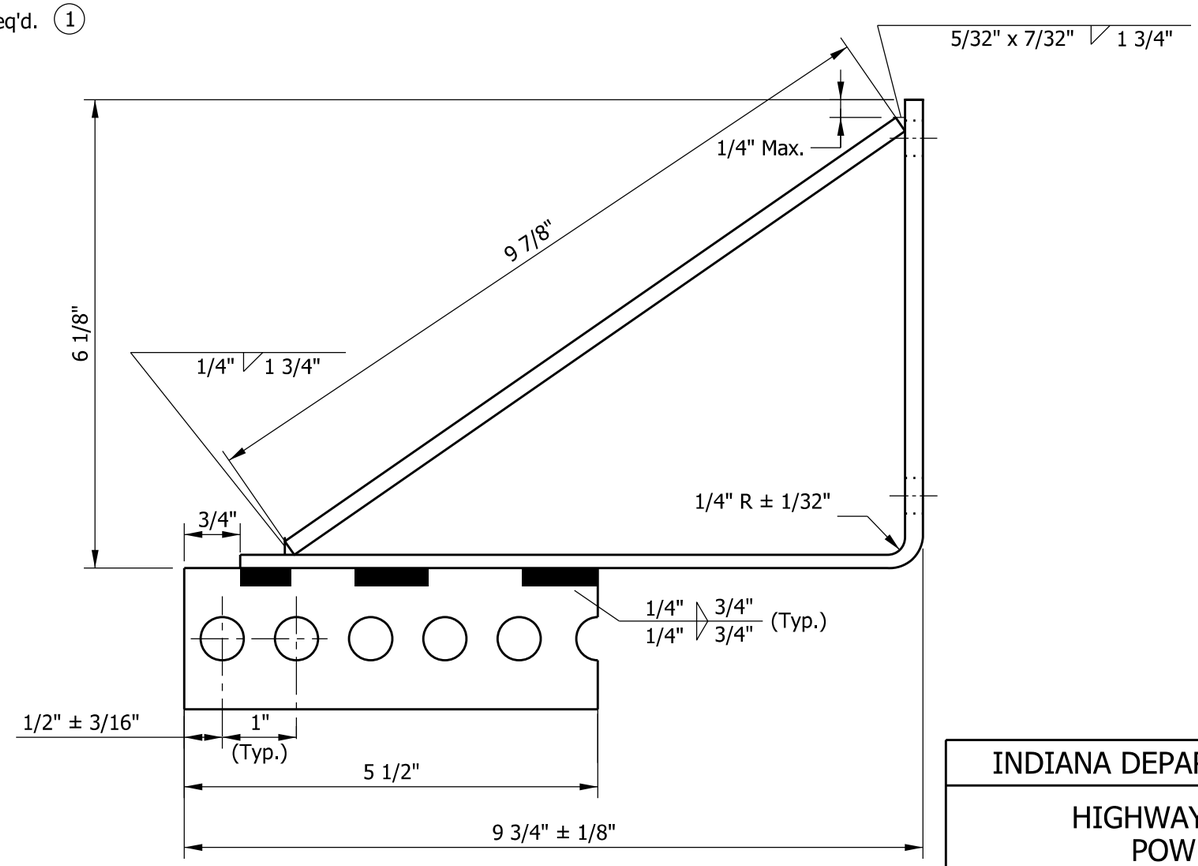

SIDE VIEW

INDIANA DEPARTMENT OF TRANSPORTATION

HIGHWAY ILLUMINATION TOWER
POWER UNIT MOUNTING
BRACKET DETAILS

SEPTEMBER 2017

STANDARD DRAWING NO. E 807-LTHI-06

DAVID H. BORUFF
REGISTERED
No. 60900348
STATE OF INDIANA
PROFESSIONAL ENGINEER

/s/ David H. Boruff 03/20/17
DESIGN STANDARDS ENGINEER DATE

/s/ John Leckie 03/20/17
CHIEF ENGINEER DATE

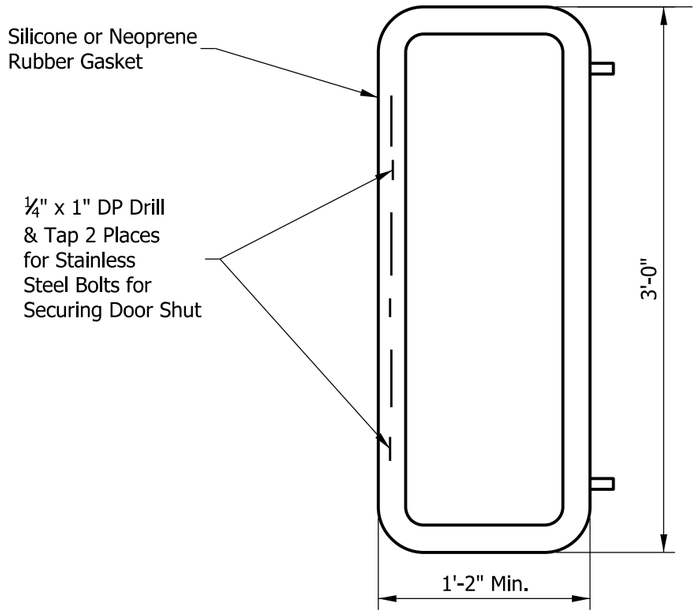

HANDHOLE FRAME DETAIL

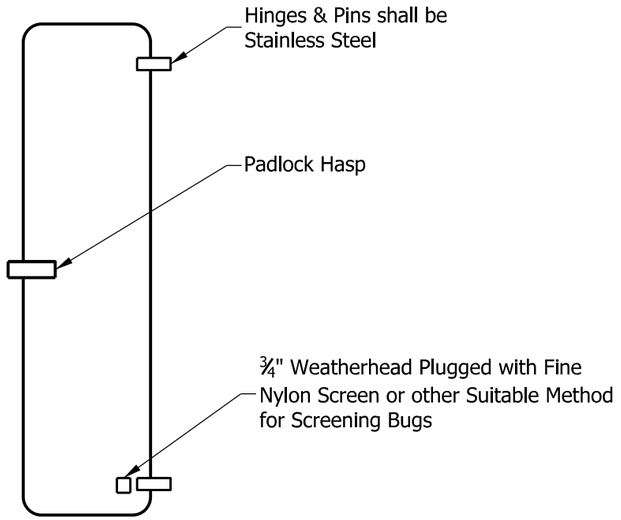

HANDHOLE COVER DETAIL

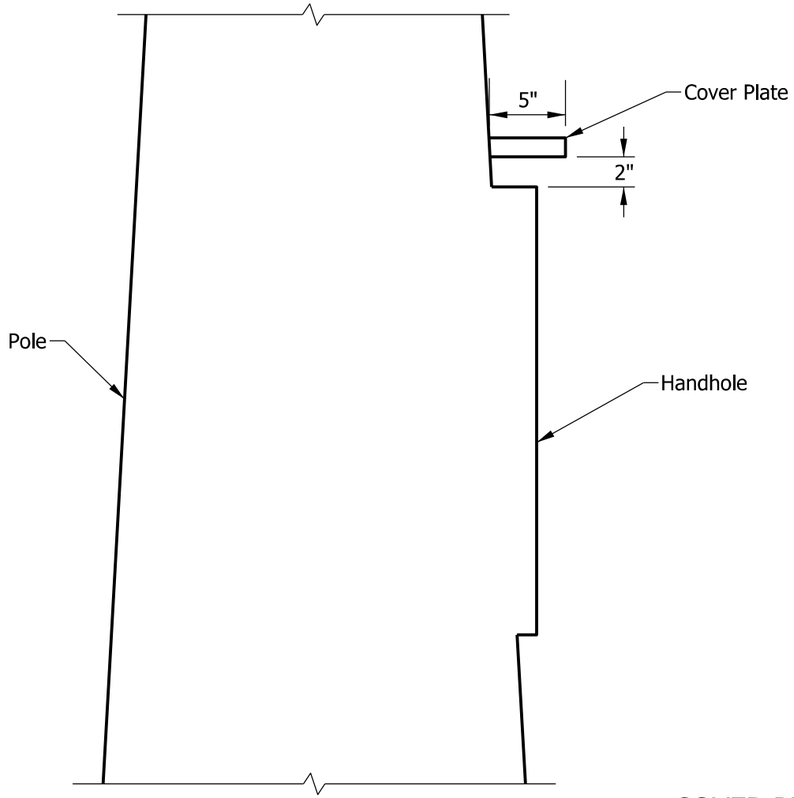

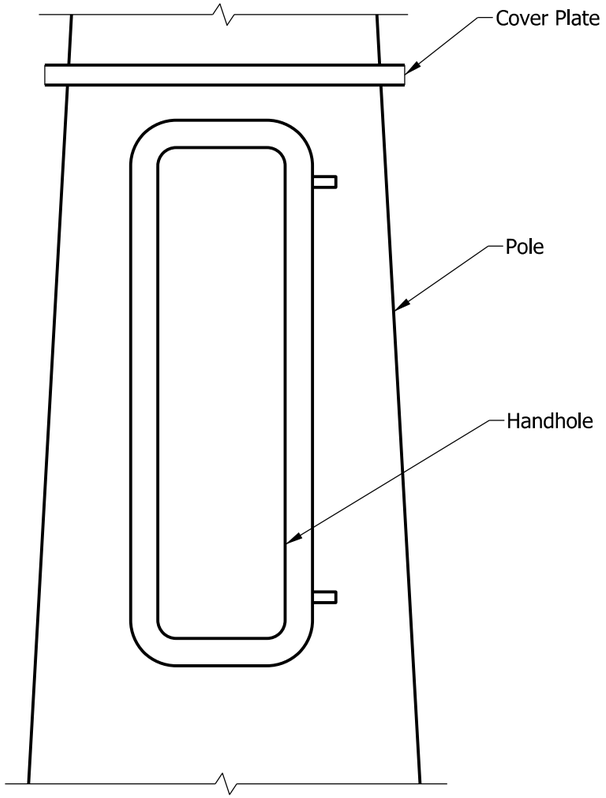

COVER PLATE

INDIANA DEPARTMENT OF TRANSPORTATION

HIGHWAY ILLUMINATION TOWER
HANDHOLE DETAILS

SEPTEMBER 2017

STANDARD DRAWING NO. E 807-LTHI-07

DAVID H. BORUFF
REGISTERED
No.
60900348
STATE OF
INDIANA
PROFESSIONAL ENGINEER

/s/ David H. Boruff 03/20/17
DESIGN STANDARDS ENGINEER DATE

/s/ John Leckie 03/20/17
CHIEF ENGINEER DATE

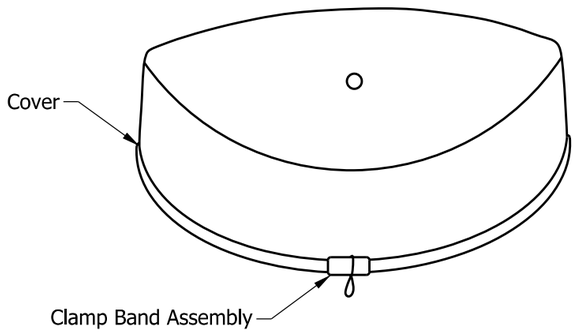

COVER

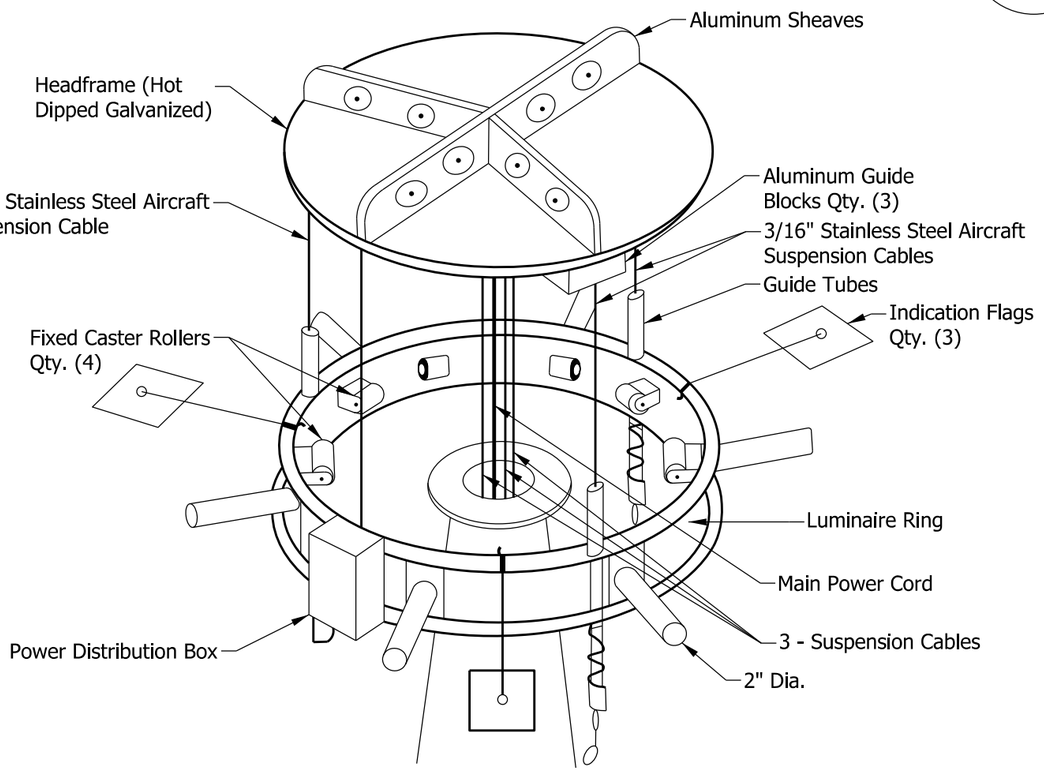

RING ASSEMBLY

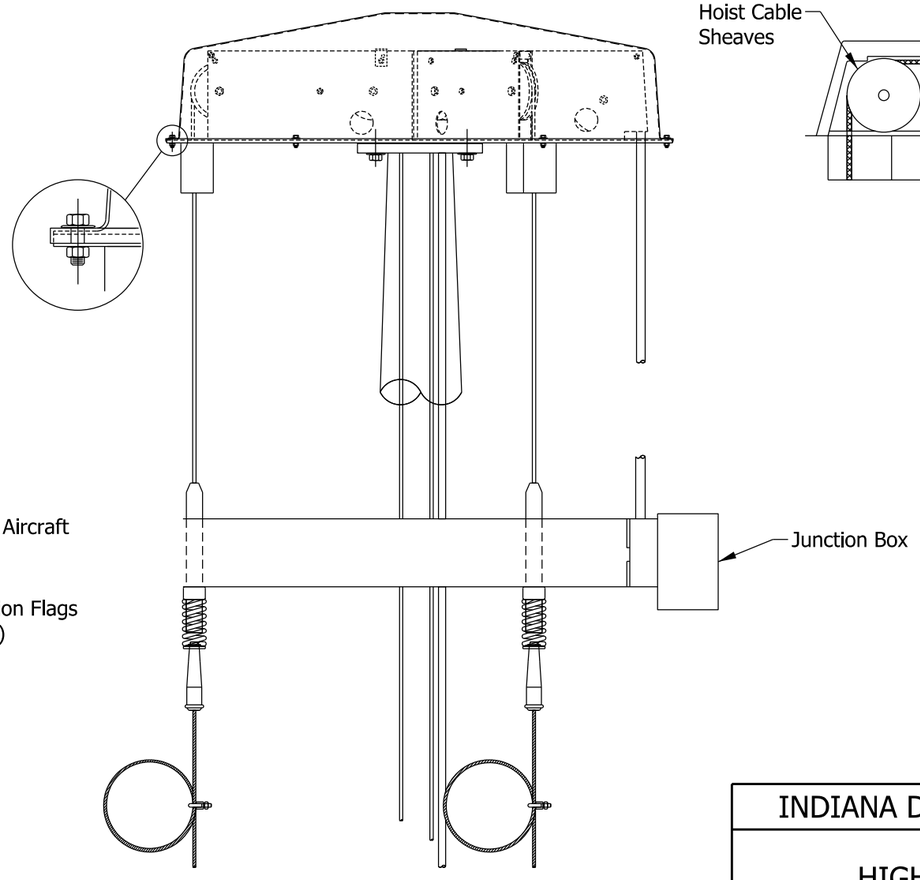

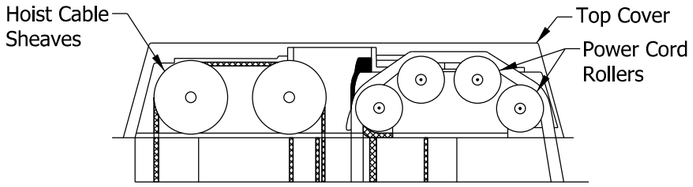

COVER DETAILS

INDIANA DEPARTMENT OF TRANSPORTATION

HIGHWAY ILLUMINATION TOWER
LUMINAIRE RING ASSEMBLY

SEPTEMBER 2017

STANDARD DRAWING NO. E 807-LTHI-08

DAVID H. BORUFF
REGISTERED
No. 60900348
STATE OF INDIANA
PROFESSIONAL ENGINEER

/s/ David H. Boruff 03/20/17
DESIGN STANDARDS ENGINEER DATE

/s/ John Leckie 03/20/17
CHIEF ENGINEER DATE

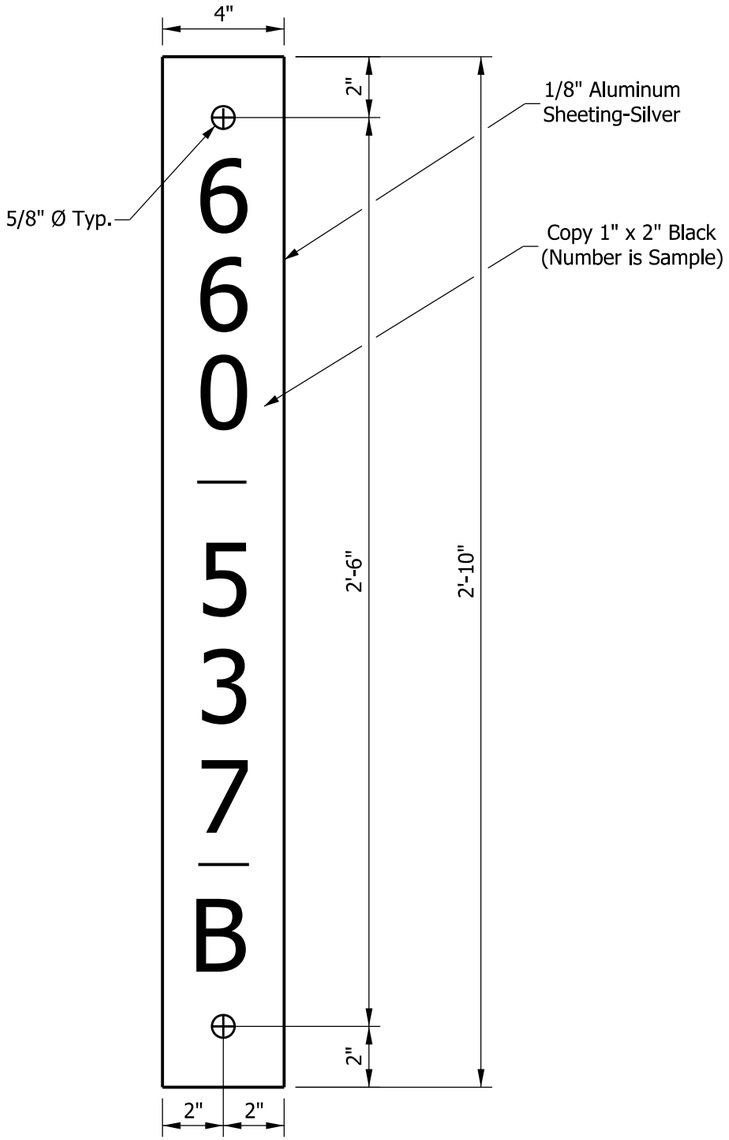

ID PLATE DETAIL

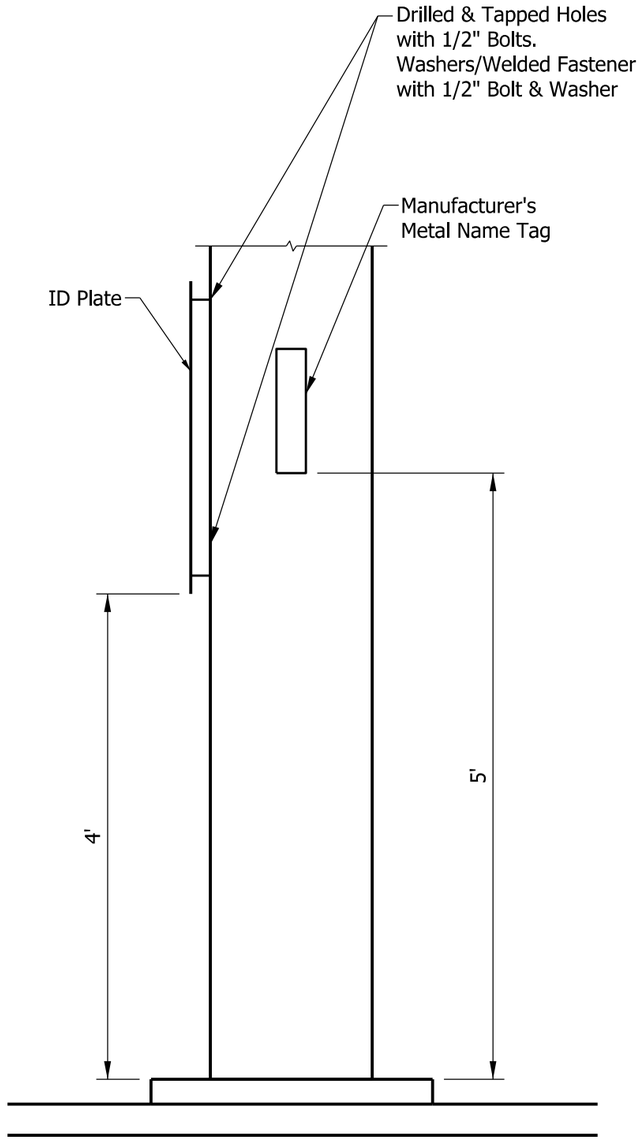

HIGH MAST POLE

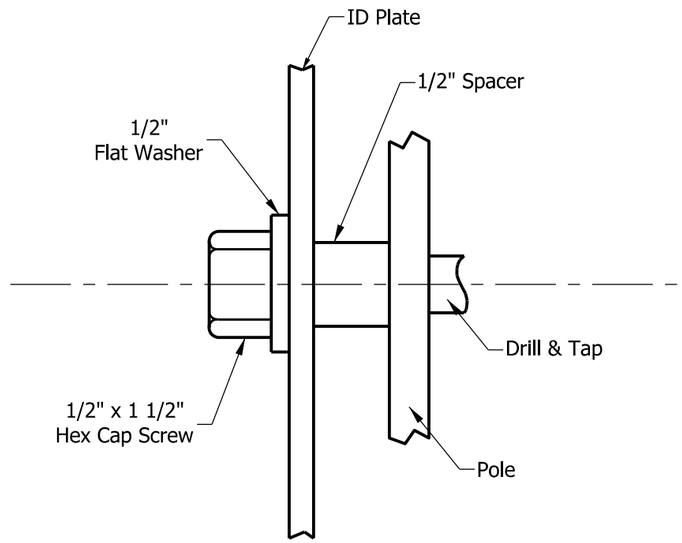

MOUNTING DETAIL

INDIANA DEPARTMENT OF TRANSPORTATION

HIGHWAY ILLUMINATION TOWER
ID PLATES

SEPTEMBER 2017

STANDARD DRAWING NO. E 807-LTHI-09

DAVID H. BORUFF
REGISTERED
No.
60900348
STATE OF
INDIANA
PROFESSIONAL ENGINEER

/s/ David H. Boruff *03/20/17*
DESIGN STANDARDS ENGINEER DATE

/s/ John Leckie *03/20/17*
CHIEF ENGINEER DATE

NOTES:

1. Holes shall be 3/8" dia., 1/2" outer circle, staggered.
2. The base plate of the high mast pole and exposed anchor bolts shall be enclosed by the aluminum skirt.

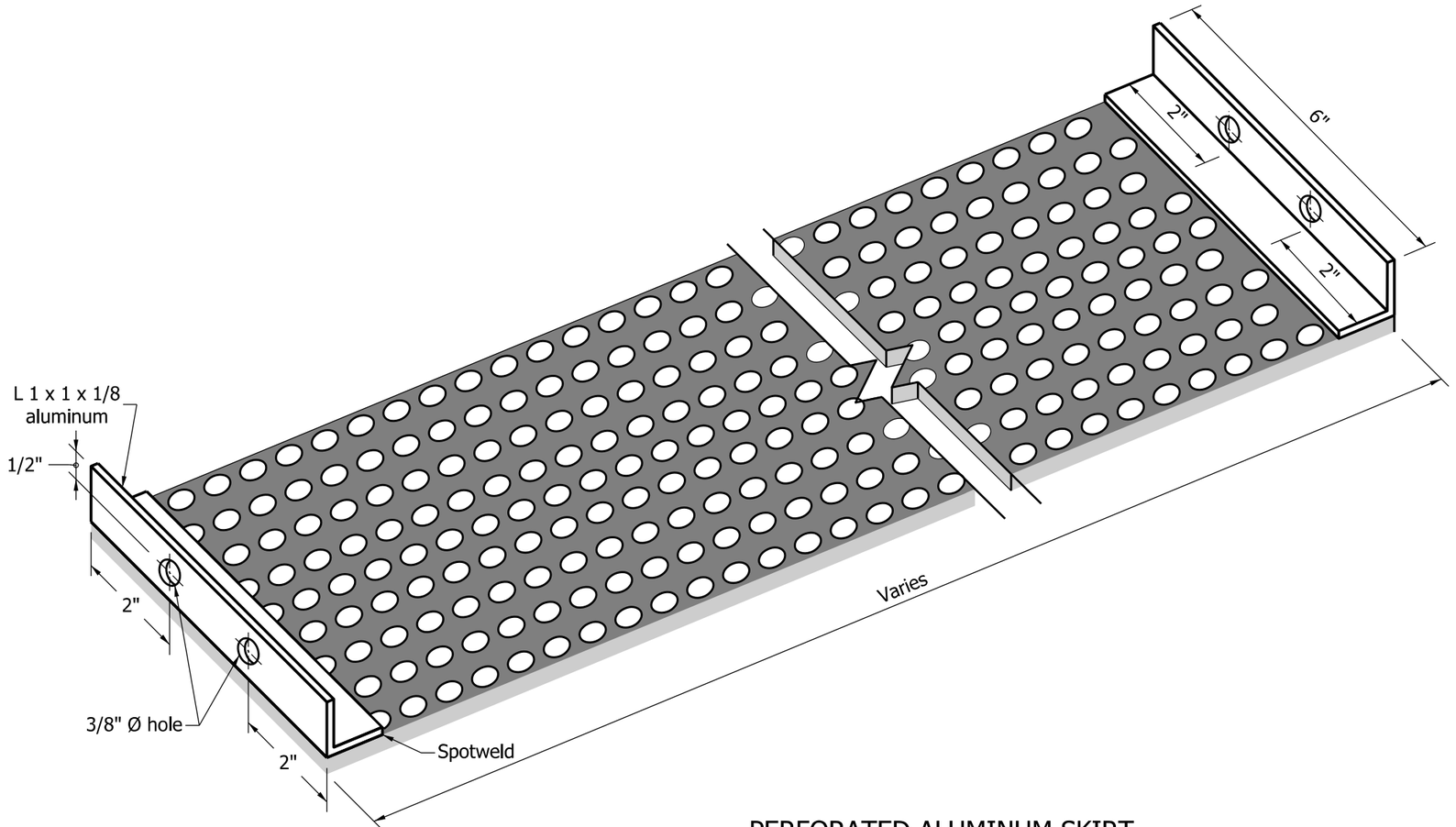

PERFORATED ALUMINUM SKIRT

INDIANA DEPARTMENT OF TRANSPORTATION

HIGHWAY ILLUMINATION TOWER
PERFORATED ALUMINUM SKIRT

SEPTEMBER 2017

STANDARD DRAWING NO. E 807-LTHI-10

DAVID H. BORUFF
REGISTERED
No.
60900348
STATE OF
INDIANA
PROFESSIONAL ENGINEER

/s/ David H. Boruff *03/20/17*
DESIGN STANDARDS ENGINEER DATE

/s/ John Leckie *03/20/17*
CHIEF ENGINEER DATE

NOTES:

1. See Standard Drawing E 807-LTHI-11 for Subgrade and ground preparation requirements.
2. The slope grading around the concrete pad shall be as shown unless otherwise directed.

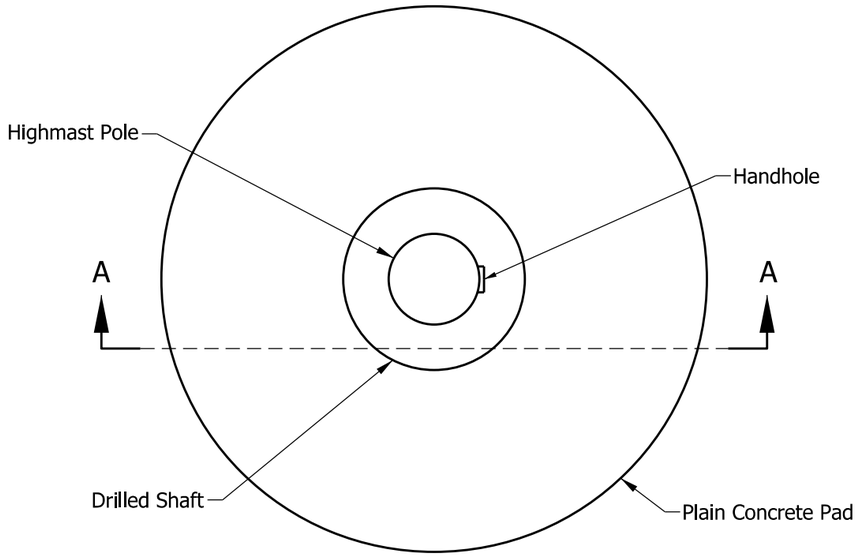

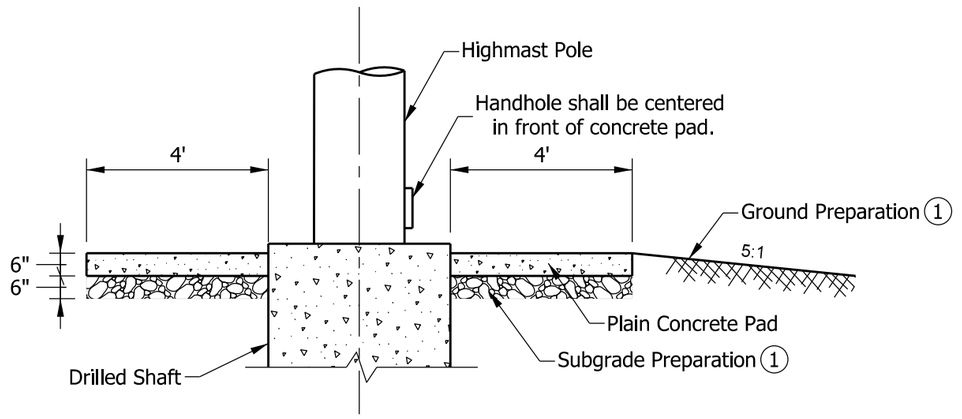

SECTION A-A

INDIANA DEPARTMENT OF TRANSPORTATION	
HIGHWAY ILLUMINATION TOWER CONCRETE PAD SEPTEMBER 2017	
STANDARD DRAWING NO. E 807-LTHI-11	
DAVID H. BORUFF REGISTERED No. 60900348 STATE OF INDIANA PROFESSIONAL ENGINEER	*/s/ David H. Boruff* 03/20/17 DESIGN STANDARDS ENGINEER DATE */s/ John Leckie* 03/20/17 CHIEF ENGINEER DATE

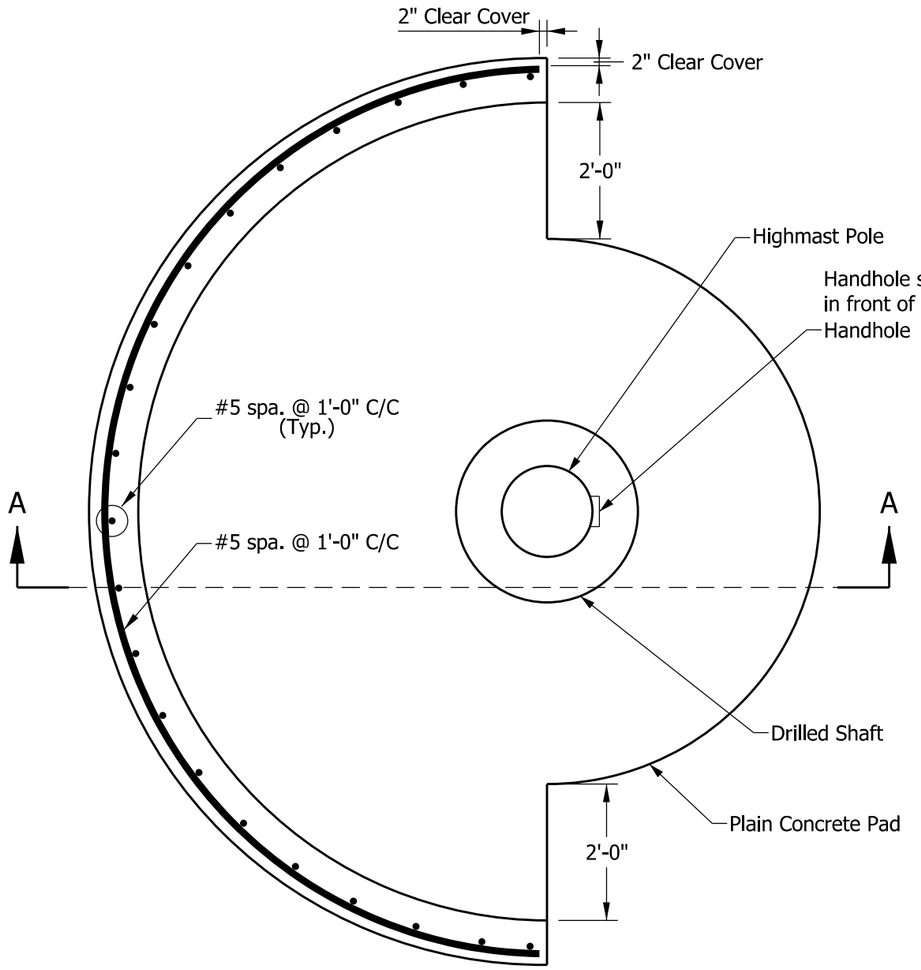

NOTES:

1. After excavation, the ground shall be compacted by means of a portable vibratory roller. Soft soil which does not compact shall be removed. All excavated material shall be replaced with compacted aggregate No. 53. Concrete pad shall be placed prior to placing backfill behind wall.
2. See Standard Drawing E 807-LTHI-11 for concrete pad where no retaining wall is required.
3. See Standard Drawing E 703-BRST-01 for bar bending details.
4. All reinforcing bars shall be epoxy coated.
5. Shape of retaining wall may be semi circular or half trapazoidal.
6. 1'-6" up to 3' high retaining wall. The embedment depth shall be increased to 2' for retaining walls taller than 3'.

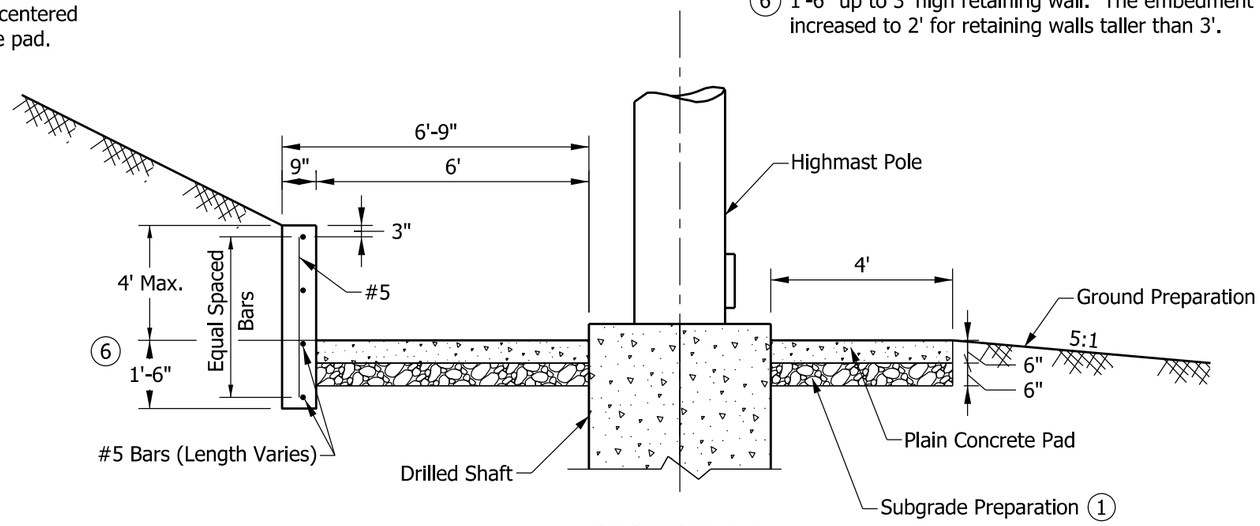

SECTION A-A

INDIANA DEPARTMENT OF TRANSPORTATION

HIGHWAY ILLUMINATION TOWER
CONCRETE PAD WITH
RETAINING WALL

SEPTEMBER 2017

STANDARD DRAWING NO. E 807-LTHI-12

DAVID H. BORUFF
REGISTERED
No.
60900348
STATE OF
INDIANA
PROFESSIONAL ENGINEER

/s/ David H. Boruff 03/20/17
DESIGN STANDARDS ENGINEER DATE

/s/ John Leckie 03/20/17
CHIEF ENGINEER DATE

POLE DATA SCHEDULE

POLE HEIGHT (E.M.H.)	POLE SHAFT DATA						BASE PLATE			ANCHOR BOLT		
	No. of Sec.	Sec.	Minimum Diameter in inches		Min. Wall Thickness in inches	Section Length in Feet	Size in inches	Bolt Circle (in.)	Thick-ness (in.)	No. Req'd.	Diameter (in.)	Length (in.)
			Base	Top								
100'	2	A	24.50	17.16	0.250	52.42	37.50	31.50	2.25	6	2.25	90
		B	18.00	10.88	0.1875	50.89						
105'	3	A	21.50	18.14	0.3125	23.98	37.50	31.50	2.25	6	2.25	90
		B	19.00	13.23	0.1875	41.21						
		C	14.00	7.55	0.1875	46.07						
110'	3	A	22.50	19.13	0.3125	24.10	37.50	31.50	2.25	6	2.25	90
		B	20.00	13.72	0.1875	44.84						
		C	14.50	7.85	0.1875	47.50						
115'	3	A	23.50	20.11	0.3125	24.23	37.50	31.50	2.25	6	2.25	90
		B	21.00	14.21	0.1875	48.48						
		C	15.00	8.15	0.1875	48.93						
120'	3	A	26.00	22.07	0.3125	28.05	37.50	31.50	2.25	6	2.25	90
		B	23.00	16.18	0.1875	48.73						
		C	17.00	9.95	0.1875	50.36						
125'	3	A	25.00	21.09	0.3750	27.92	37.50	31.50	2.25	6	2.25	90
		B	22.00	14.70	0.1875	52.11						
		C	15.50	8.25	0.1875	51.79						
130'	3	A	25.00	20.11	0.3750	34.94	37.50	31.50	2.25	6	2.25	90
		B	21.00	14.21	0.1875	48.48						
		C	15.00	7.55	0.1875	53.21						
135'	3	A	26.00	20.11	0.3750	42.09	37.50	31.50	2.25	6	2.25	90
		B	21.00	14.21	0.1875	48.48						
		C	15.00	7.85	0.1875	51.07						
140'	3	A	26.80	20.60	0.3750	44.29	37.50	31.50	2.25	6	2.25	90
		B	21.50	14.21	0.1875	52.05						
		C	15.00	7.95	0.1875	50.36						
145'	3	A	27.00	20.60	0.4375	45.72	39.50	33.50	2.25	8	2.25	90
		B	21.50	14.21	0.1875	52.05						
		C	15.00	7.45	0.1875	53.93						
150'	3	A	28.00	20.60	0.4375	52.86	39.50	33.50	2.25	8	2.25	90
		B	21.50	14.21	0.1875	52.05						
		C	15.00	7.75	0.1875	51.79						
155'	4	A	28.50	24.04	0.4375	31.87	39.50	33.50	2.25	8	2.25	90
		B	25.00	19.13	0.1875	41.96						
		C	20.00	14.21	0.1875	41.34						
		D	15.00	7.93	0.1875	50.54						

INDIANA DEPARTMENT OF TRANSPORTATION

HIGHWAY ILLUMINATION TOWER
POLE DATA SCHEDULE (1 of 2)
POLE HEIGHTS 100' - 155'
SEPTEMBER 2017

STANDARD DRAWING NO. E 807-LTHI-13

DAVID H. BORUFF REGISTERED No. 60900348 STATE OF INDIANA PROFESSIONAL ENGINEER

/s/ David H. Boruff 03/20/17
DESIGN STANDARDS ENGINEER DATE

/s/ John Leckie 03/20/17
CHIEF ENGINEER DATE

POLE DATA SCHEDULE

POLE HEIGHT (E.M.H.)	POLE SHAFT DATA						BASE PLATE			ANCHOR BOLT		
	No. of Sec.	Sec.	Minimum Diameter in inches		Min. Wall Thickness in inches	Section Length in Feet	Size in inches	Bolt Circle (in.)	Thick-ness (in.)	No Req'd.	Diameter (in.)	Length (in.)
			Base	Top								
160'	4	A	28.80	25.02	0.4375	27.00	39.50	33.50	2.25	8	2.25	90
		B	26.00	19.62	0.1875	45.59						
		C	20.50	13.72	0.1875	48.42						
		D	14.50	7.53	0.1875	49.82						
165'	4	A	29.50	25.51	0.5000	28.49	46	40.00	2.25	8	2.25	90
		B	26.50	19.62	0.1875	49.17						
		C	20.50	13.72	0.1875	48.42						
		D	14.50	7.53	0.1875	49.82						
170'	4	A	30.50	25.02	0.5000	39.14	46	40.00	2.25	8	2.25	90
		B	26.00	20.11	0.1875	42.09						
		C	21.00	14.21	0.1875	48.48						
		D	15.00	7.83	0.1875	51.25						
175'	4	A	31.00	25.02	0.5000	42.71	46	40.00	2.25	8	2.25	90
		B	26.00	19.62	0.1875	45.59						
		C	20.50	13.72	0.1875	48.42						
		D	14.50	7.63	0.1875	49.11						
180'	4	A	32.00	25.02	0.5000	49.85	46	40.00	2.25	8	2.25	90
		B	26.00	19.13	0.1875	49.10						
		C	20.00	13.23	0.1875	48.35						
		D	14.00	7.93	0.1875	43.39						
185'	4	A	32.50	26.00	0.5000	46.41	46	40.00	2.25	8	2.25	90
		B	27.00	20.11	0.1875	49.23						
		C	21.00	14.21	0.1875	48.48						
		D	15.00	7.73	0.1875	51.96						
190'	5	A	33.00	28.95	0.6250	28.92	48	42.00	2.25	12	2.25	90
		B	30.00	24.04	0.1875	42.59						
		C	25.00	19.13	0.1875	41.96						
		D	20.00	14.21	0.1875	41.34						
		E	15.00	7.90	0.1875	50.71						
195'	5	A	33.50	28.95	0.6250	32.50	48	42.00	2.25	12	2.25	90
		B	30.00	24.04	0.1875	42.59						
		C	25.00	19.13	0.1875	41.96						
		D	20.00	14.21	0.1875	41.34						
		E	15.00	7.70	0.1875	52.14						
200'	5	A	34.00	28.89	0.6250	36.51	48	42.00	2.25	12	2.25	90
		B	30.00	23.55	0.2188	46.09						
		C	24.50	18.63	0.1875	41.90						
		D	19.50	13.72	0.1875	41.27						
		E	14.50	7.56	0.1875	49.55						

INDIANA DEPARTMENT OF TRANSPORTATION

HIGHWAY ILLUMINATION TOWER
POLE DATA SCHEDULE (2 of 2)
POLE HEIGHTS 160' - 200'
SEPTEMBER 2017

STANDARD DRAWING NO. E 807-LTHI-14

DAVID H. BORUFF REGISTERED No. 60900348 STATE OF INDIANA PROFESSIONAL ENGINEER

/s/ David H. Boruff 03/20/17
DESIGN STANDARDS ENGINEER DATE

/s/ John Leckie 03/20/17
CHIEF ENGINEER DATE

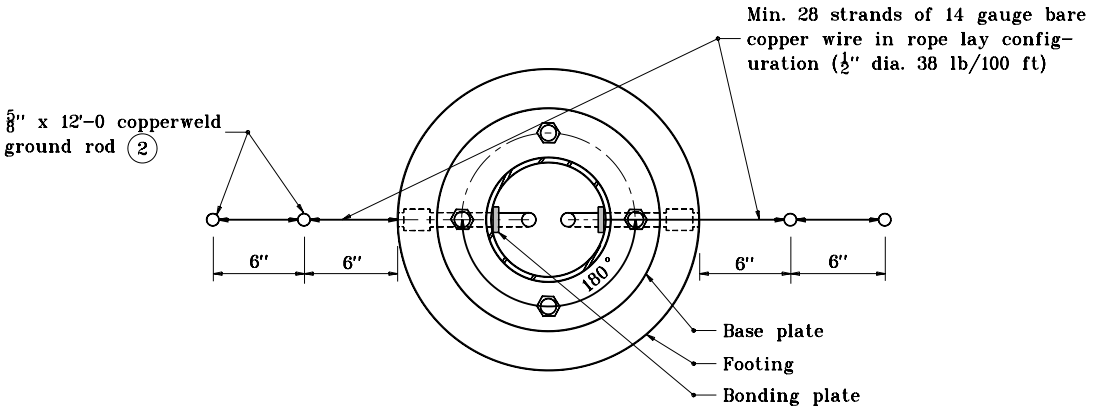

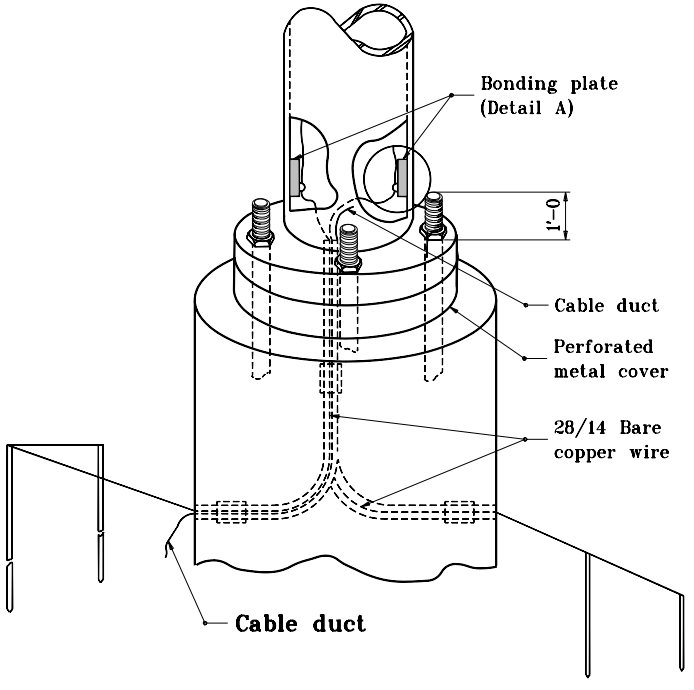

GENERAL NOTES

1. Shop drawings shall be submitted on lightning rod and connection details. Drawings are for informational purposes only. Only one lightning rod is required per structure.

(2) Grounding rod must be located a min. of 6 ft from base at a min. of 2 ft below grade.

For bonding plate detail, see Standard Drawing No. E 807-LTLR-02.

INDIANA DEPARTMENT OF TRANSPORTATION

LIGHTNING ROD TYPICAL DETAILS

MARCH 1995

STANDARD DRAWING NO. **E 807-LTLR-01**

ANTHONY L. UREMOVICH REGISTERED No. 18095 STATE OF INDIANA PROFESSIONAL ENGINEER

DESIGN STANDARDS ENGINEER

DETAILS PLACED IN THIS FORMAT 7-27-99

/s/ Anthony L. Uremovich 7-27-99
DESIGN STANDARDS ENGINEER DATE

/s/ Firooz Zandi 7-27-99
CHIEF HIGHWAY ENGINEER DATE

ORIGINALLY APPROVED 3-01-95

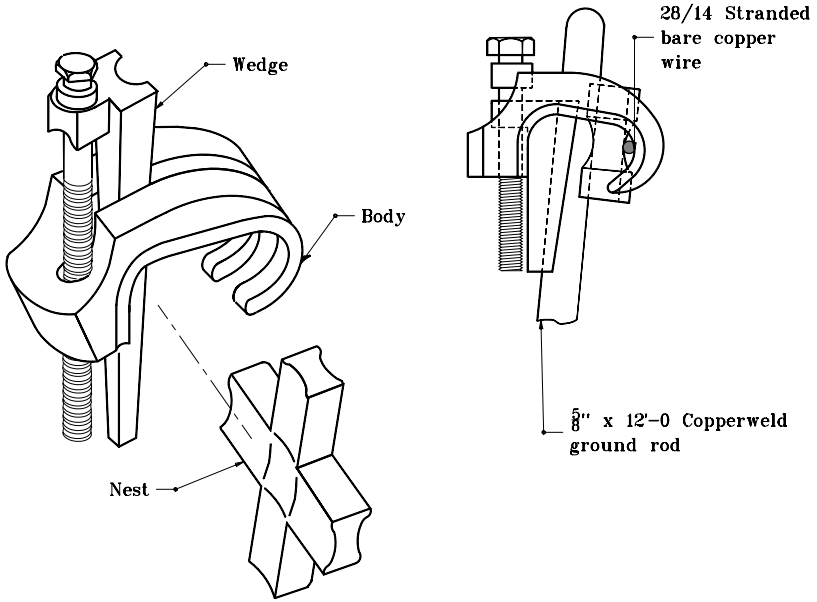

GROUNDING GRID CONNECTOR

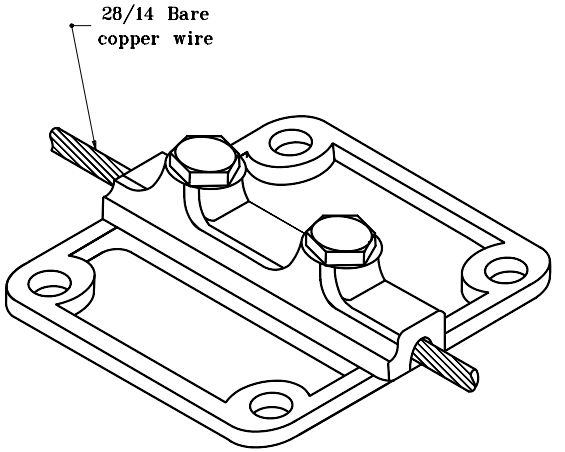

BONDING PLATE
(DETAIL A)

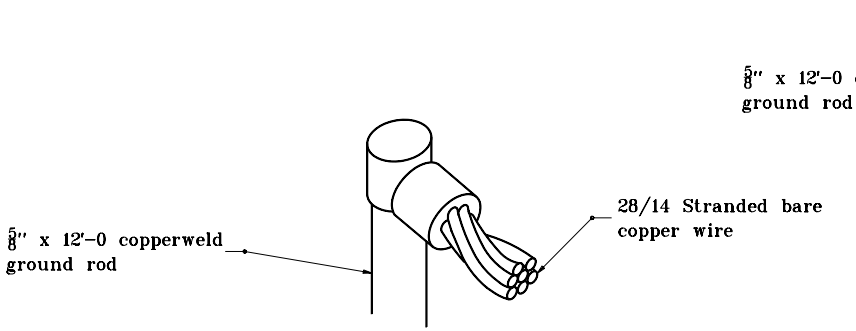

TOP CONNECTION

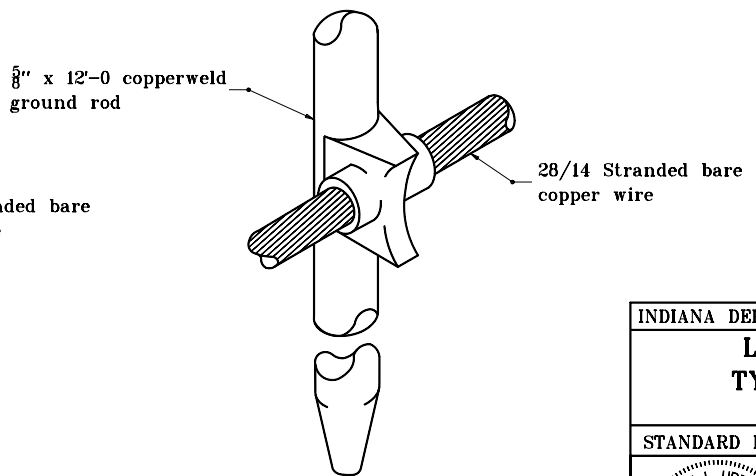

SIDE CONNECTION

THERMOWELD PROCESS

INDIANA DEPARTMENT OF TRANSPORTATION

LIGHTNING ROD TYPICAL DETAILS

MARCH 1995

STANDARD DRAWING NO. **E 807-LTLR-02**

ANTHONY L. UREMOVICH REGISTERED No. 18095 STATE OF INDIANA PROFESSIONAL ENGINEER

DESIGN STANDARDS ENGINEER

DETAILS PLACED IN THIS FORMAT 11-15-99

/s/ Anthony L. Uremovich 11-15-99
DESIGN STANDARDS ENGINEER DATE

/s/ Firooz Zandi 11-15-99
CHIEF HIGHWAY ENGINEER DATE

ORIGINALLY APPROVED 3-01-95

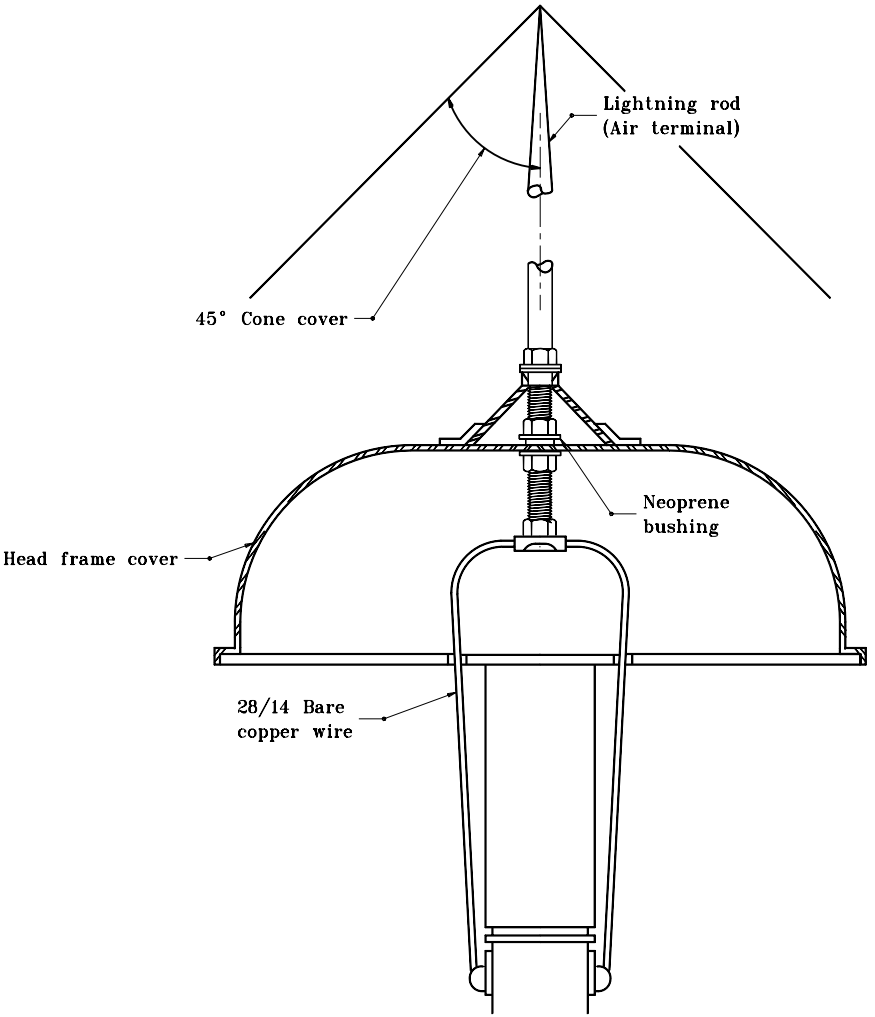

CENTER HOOD MOUNT

INDIANA DEPARTMENT OF TRANSPORTATION

LIGHTNING ROD TYPICAL DETAILS

MARCH 1995

STANDARD DRAWING NO. **E 807-LTLR-03**

ANTHONY L. UREMOVICH REGISTERED No. 18095 STATE OF INDIANA PROFESSIONAL ENGINEER

DESIGN STANDARDS ENGINEER

DETAILS PLACED IN THIS FORMAT 11-15-99

/s/ Anthony L. Uremovich 11-15-99
DESIGN STANDARDS ENGINEER DATE

/s/ Firooz Zandi 11-15-99
CHIEF HIGHWAY ENGINEER DATE

ORIGINALLY APPROVED 3-01-95

NOTES

(1) See Standard Drawing E 807-LTLR-02 for Detail A.

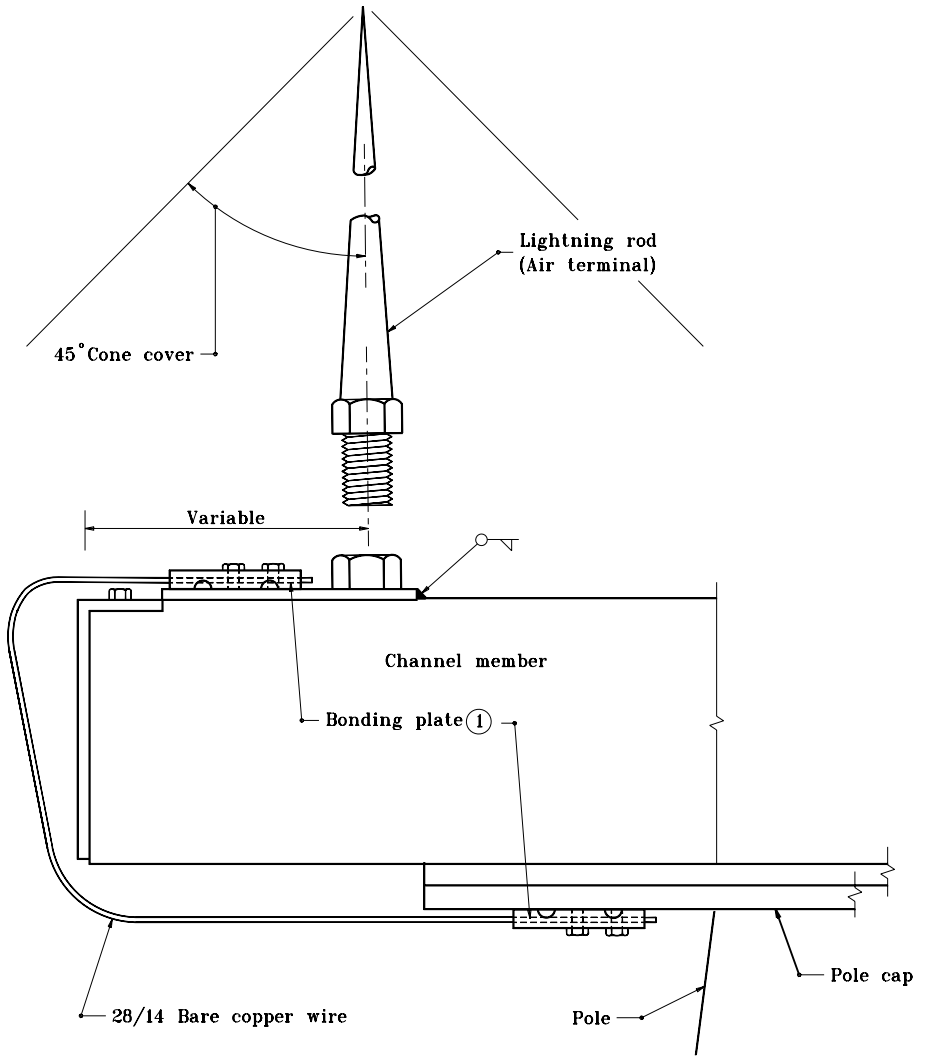

CHANNEL MOUNT

INDIANA DEPARTMENT OF TRANSPORTATION

LIGHTNING ROD TYPICAL DETAILS

MARCH 1995

STANDARD DRAWING NO. E 807-LTLR-04

ANTHONY L. UREMOVICH REGISTERED No. 18095 STATE OF INDIANA PROFESSIONAL ENGINEER

DESIGN STANDARDS ENGINEER

DETAILS PLACED IN THIS FORMAT	11-15-99
/s/ Anthony L. Uremovich, DESIGN STANDARDS ENGINEER	11-15-99
/s/ Firooz Zandi, CHIEF HIGHWAY ENGINEER	11-15-99
ORIGINALLY APPROVED	3-01-95

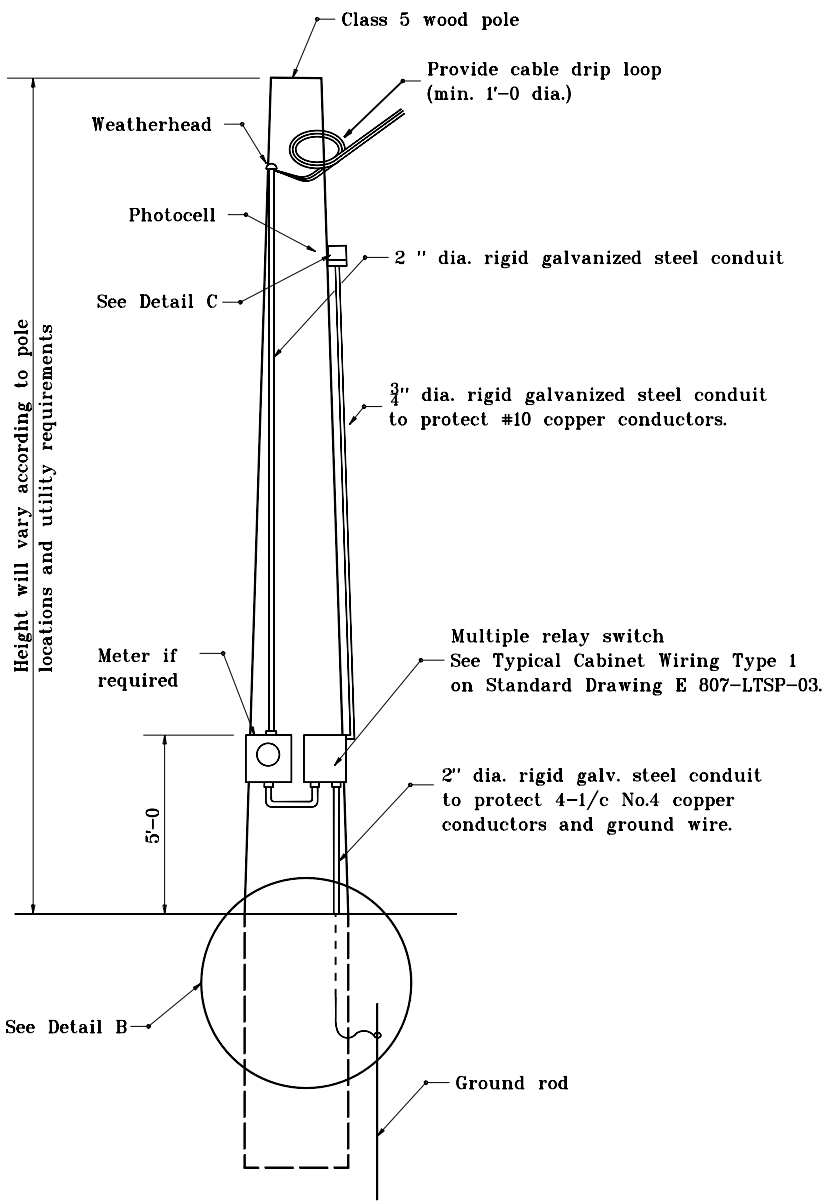

SERVICE POINT
TYPE I

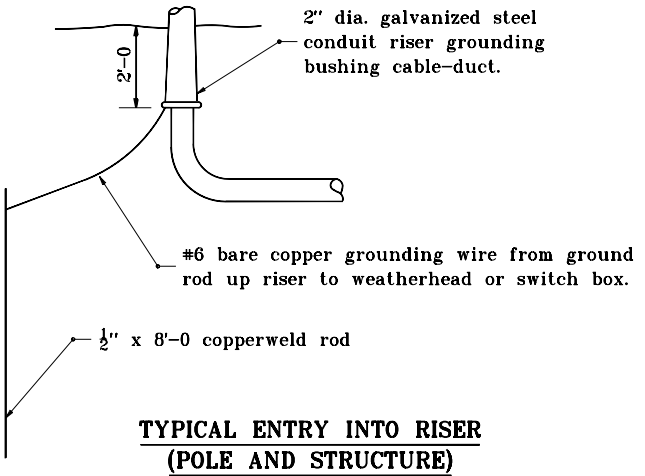

TYPICAL ENTRY INTO RISER
(POLE AND STRUCTURE)

DETAIL B

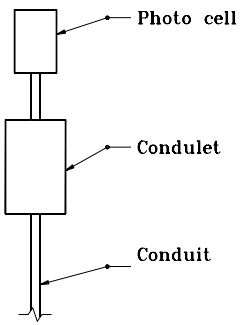

DETAIL C

INDIANA DEPARTMENT OF TRANSPORTATION

LIGHT SERVICE POINT DETAILS

SEPTEMBER 1998

STANDARD DRAWING NO. **E 807-LTSP-01**

ANTHONY L. UREMOVICH REGISTERED No. 18095 STATE OF INDIANA PROFESSIONAL ENGINEER

DESIGN STANDARDS ENGINEER

DETAILS PLACED IN THIS FORMAT	11-15-99
/s/ Anthony L. Uremovich	11-15-99
DESIGN STANDARDS ENGINEER	DATE
/s/ Firooz Zandi	11-15-99
CHIEF HIGHWAY ENGINEER	DATE
ORIGINALLY APPROVED	9-01-98

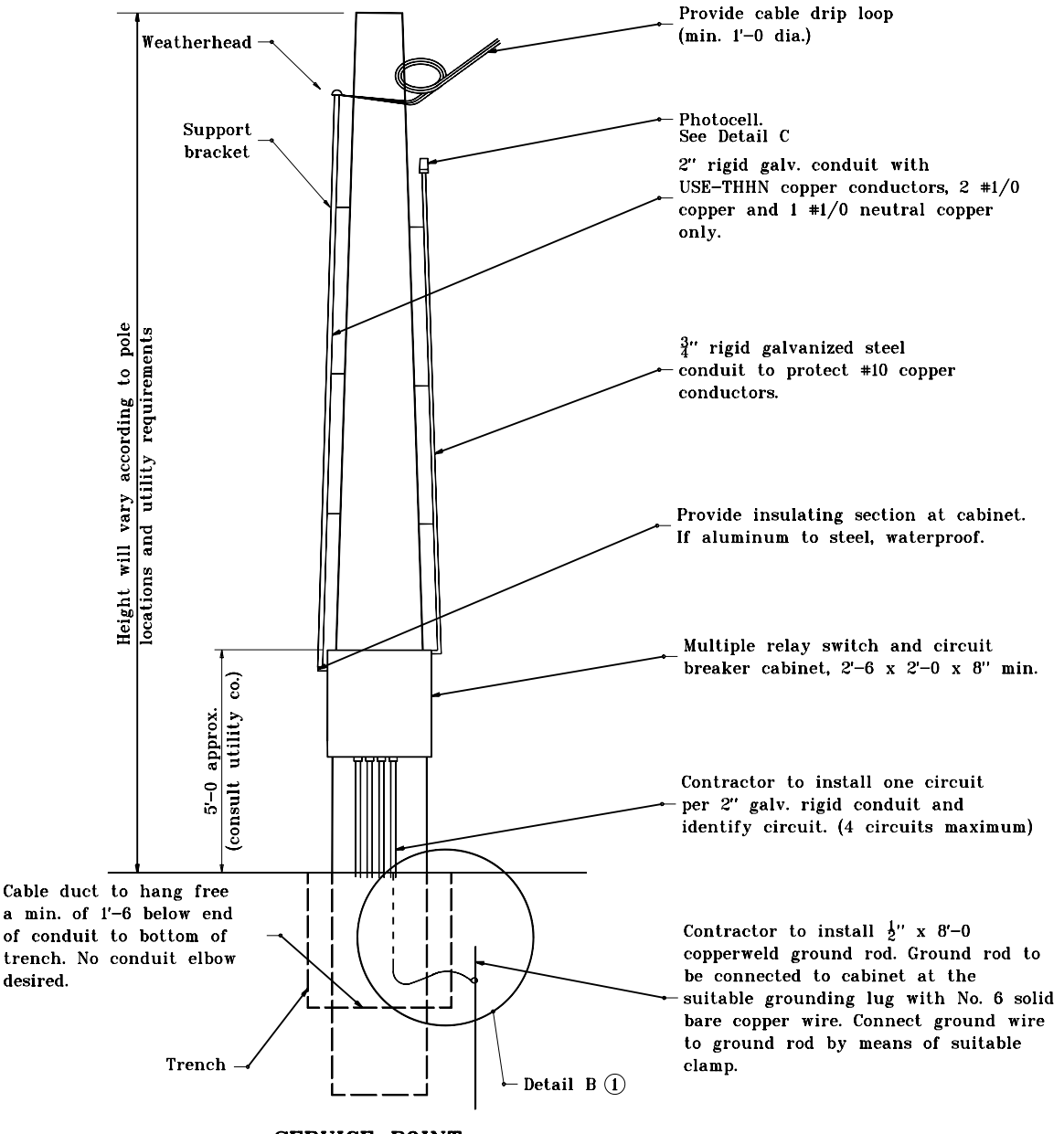

SERVICE POINT
TYPE II

Notes:

(1) See Standard Drawing E 807-LTSP-01 for Detail B.

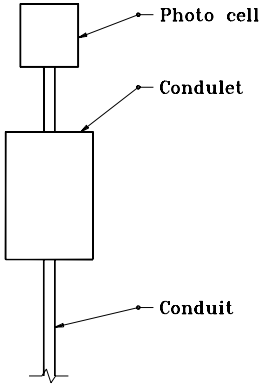

DETAIL C

INDIANA DEPARTMENT OF TRANSPORTATION

LIGHT SERVICE POINT DETAILS

JANUARY 2000

STANDARD DRAWING NO. **E 807-LTSP-02**

ANTHONY L. UREMOVICH REGISTERED No. 18095 STATE OF INDIANA PROFESSIONAL ENGINEER

DESIGN STANDARDS ENGINEER

/s/ Anthony L. Uremovich 1-03-00
DESIGN STANDARDS ENGINEER — DATE

/s/ Firooz Zandi 1-03-00
CHIEF HIGHWAY ENGINEER — DATE

GENERAL NOTES

To Photo Control:
240 V ac required for 240/480 V ac supply.
120 V ac required for 120/240 V ac supply.

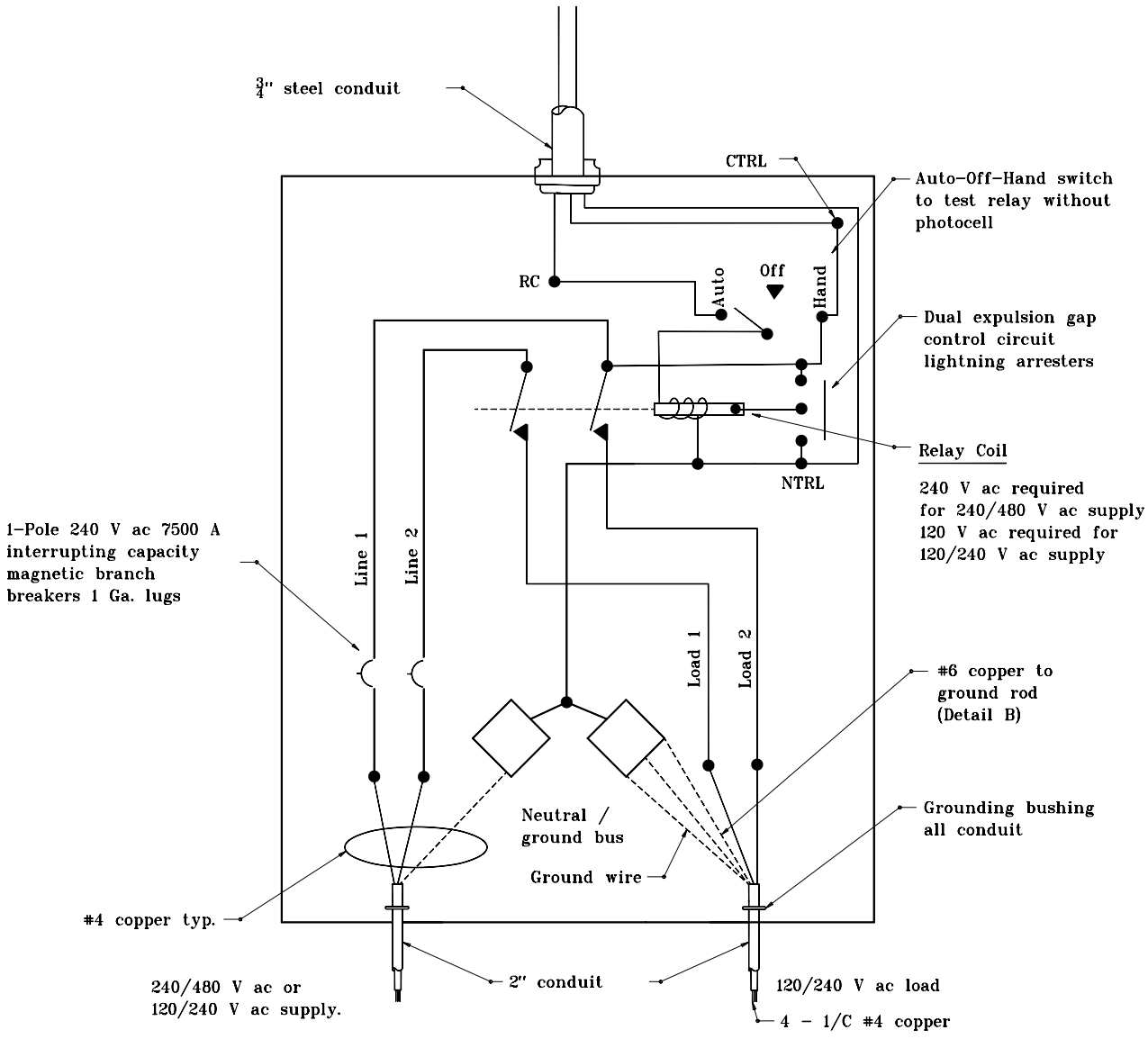

TYPICAL CABINET WIRING, TYPE 1

INDIANA DEPARTMENT OF TRANSPORTATION

LIGHT SERVICE POINT DETAILS

JANUARY 2000

STANDARD DRAWING NO. **E 807-LTSP-03**

ANTHONY L. UREMOVICH REGISTERED No. 18095 STATE OF INDIANA PROFESSIONAL ENGINEER

DESIGN STANDARDS ENGINEER

/s/ Anthony L. Uremovich 1-03-00
DESIGN STANDARDS ENGINEER — DATE

/s/ Firooz Zandi 1-03-00
CHIEF HIGHWAY ENGINEER — DATE

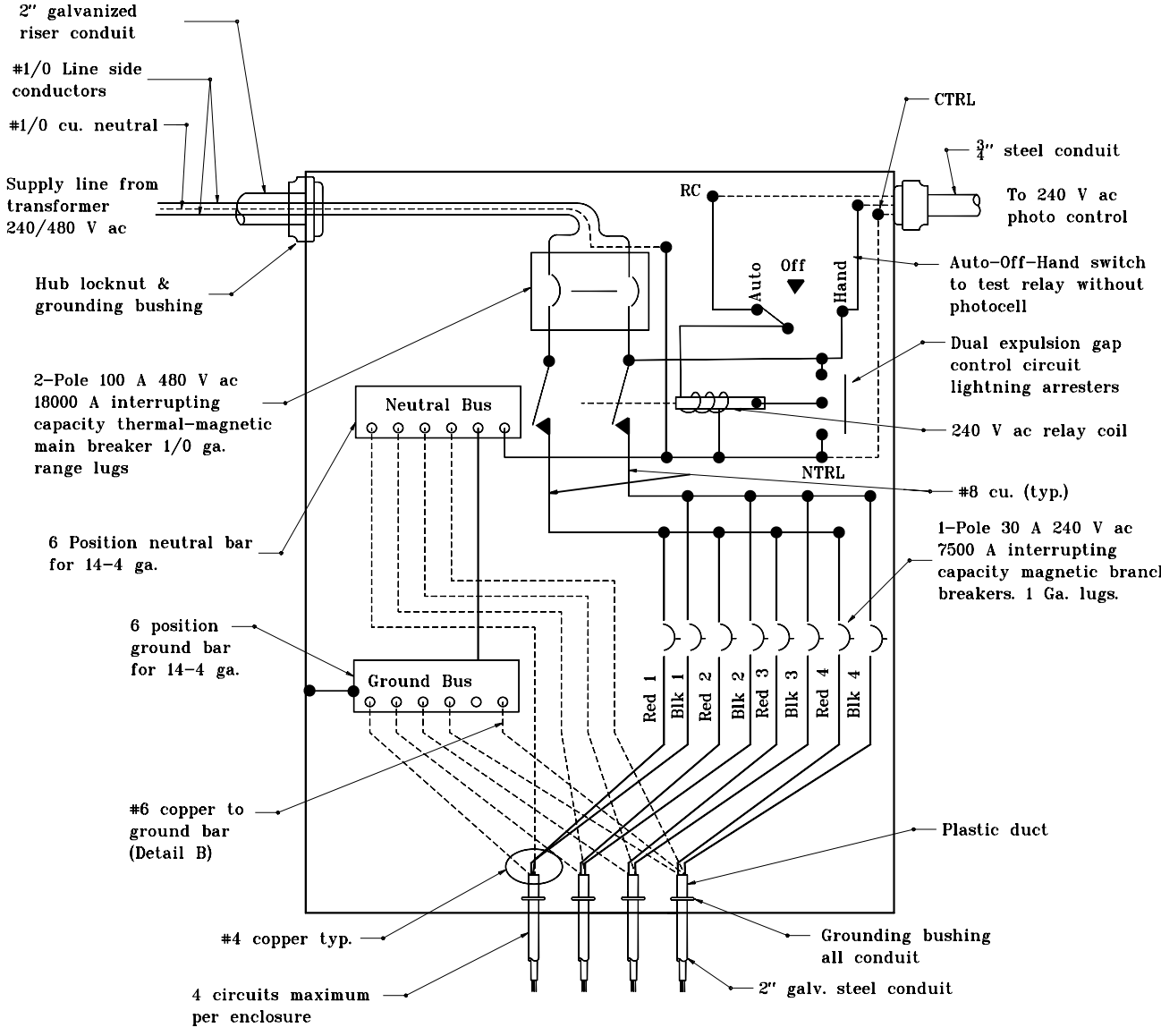

TYPICAL CABINET WIRING, TYPE II

INDIANA DEPARTMENT OF TRANSPORTATION

LIGHT SERVICE POINT DETAILS

JANUARY 2000

STANDARD DRAWING NO. **E 807-LTSP-04**

ANTHONY L. UREMOVICH REGISTERED No. 18095 STATE OF INDIANA PROFESSIONAL ENGINEER

DESIGN STANDARDS ENGINEER

/s/ Anthony L. Uremovich 1-03-00
DESIGN STANDARDS ENGINEER — DATE

/s/ Firooz Zandi 1-03-00
CHIEF HIGHWAY ENGINEER — DATE

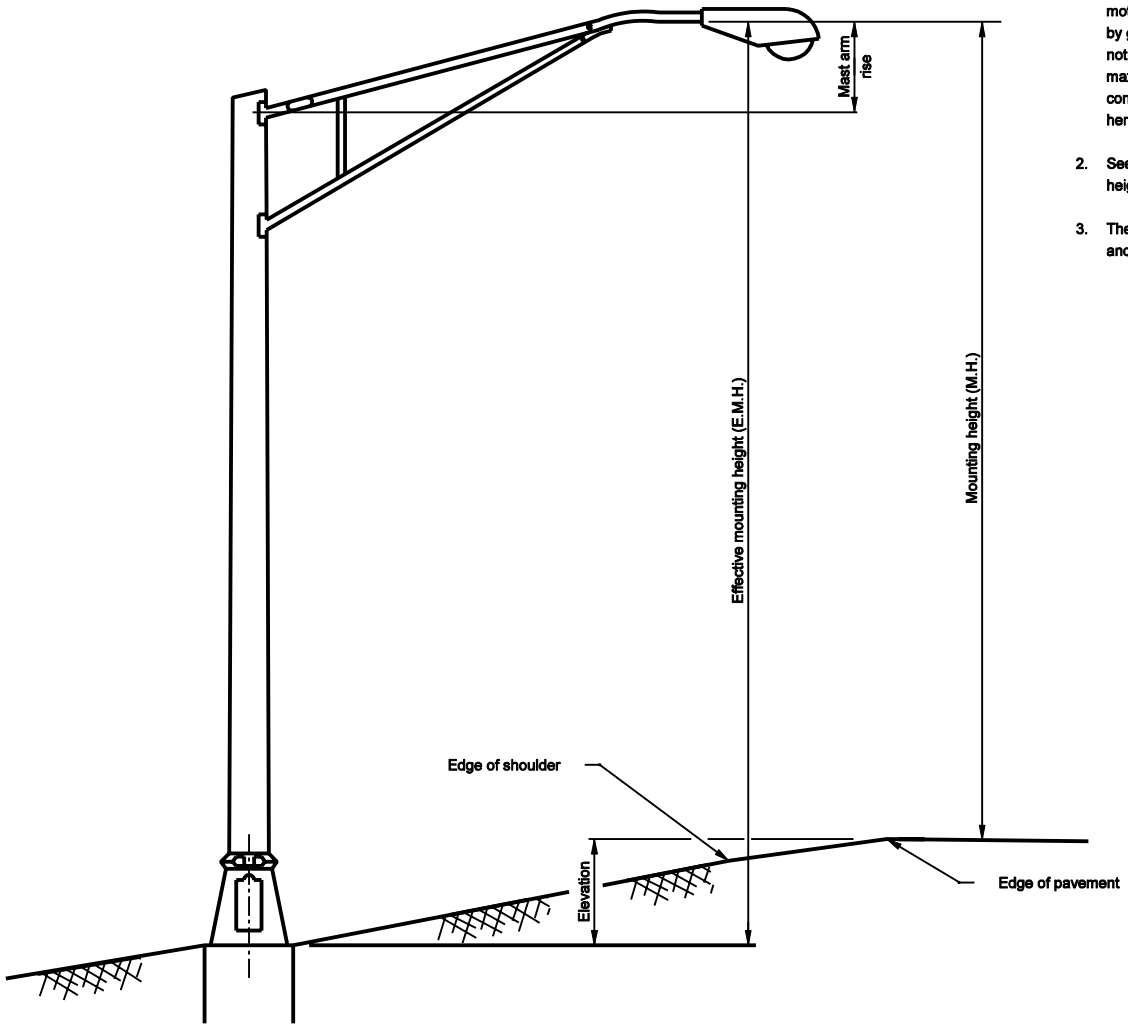

NOTES

1. Standard Drawings E 807-LTFD-02 through -04 represent the maximum roadside slope normally encountered without guardrail protection. If motorists are protected from the light standard by guardrail, the treatments found herein are not required. These drawings indicate the maximum slopes permissible on the fill. Any conditions more severe than those represented here shall be graded as directed.
2. See Standard Drawing E 807-LTST-02 for mounting heights and dimensions of corresponding components.
3. The front of the foundation shall face the roadway and the back shall face the right-of-way line.

INDIANA DEPARTMENT OF TRANSPORTATION

LIGHT STANDARD FOUNDATION

SEPTEMBER 2002

STANDARD DRAWING NO. E 807-LTST-01

RICHARD L. VanCLEAVE REGISTERED No. 9750 STATE OF INDIANA PROFESSIONAL ENGINEER

DESIGN STANDARDS ENGINEER

/s/ Richard L. VanCleave 9-03-02
DESIGN STANDARDS ENGINEER DATE

/s/ Richard K. Smulzer 9-03-02
CHIEF HIGHWAY ENGINEER DATE

FOR ROADWAY INSTALLATION (TRANSFORMER BASE)					
E.M.H. (FT.)	ARM LENGTH (FT.)	SHAFT			BASE PLATE
		BASE DIAMETER (IN.)	TOP DIAMETER (IN.)	THICKNESS (IN.)	BOLT CIRCLE (IN.)
25	5	8	4.5	0.188	11 1/2"
25	10	8	6	0.188	11 1/2"
25	15	8	6	0.188	11 1/2"
25	20	10	6	0.188	14 1/2"
25	25	10	6	0.250	14 1/2"
30	5	8	4.5	0.188	11 1/2"
30	10	8	6	0.188	11 1/2"
30	15	8	6	0.188	11 1/2"
30	20	10	6	0.188	14 1/2"
30	25	10	6	0.250	14 1/2"
35	5	8	4.5	0.188	11 1/2"
35	10	8	6	0.188	11 1/2"
35	15	8	6	0.188	11 1/2"
35	20	10	6	0.188	14 1/2"
35	25	10	6	0.250	14 1/2"
40	5	8	6	0.188	11 1/2"
40	10	8	6	0.188	11 1/2"
40	15	8	6	0.219	11 1/2"
40	20	10	6	0.219	14 1/2"
40	25	10	6	0.312	14 1/2"
45	5	8	6	0.219	11 1/2"
45	10	8	6	0.219	11 1/2"
45	15	8	6	0.219	11 1/2"
45	20	10	6	0.250	14 1/2"
45	25	10	6	0.312	14 1/2"

FOR BRIDGE DECK INSTALLATION (ANCHOR BASE)					
E.M.H. (FT.)	ARM LENGTH (FT.)	SHAFT			BASE PLATE
		BASE DIAMETER (IN.)	TOP DIAMETER (IN.)	THICKNESS (IN.)	BOLT CIRCLE (IN.)
25	5	8	4.5	0.188	11 1/2"
25	5	8	6	0.188	11 1/2"
30	5	8	4.5	0.188	11 1/2"
30	5	8	6	0.188	11 1/2"
35	5	8	4.5	0.188	11 1/2"
35	5	8	6	0.188	11 1/2"
40	5	8	6	0.188	11 1/2"
40	5	8	6	0.219	11 1/2"
45	5	8	6	0.219	11 1/2"
45	5	8	6	0.250	11 1/2"

NOTES

1. Each anchor bolt for roadway installation shall have a diameter of 1", a total length of 4'-4" and a hook length of 4". Each washer shall be galvanized flat washer 1 1/16" I.D., 2 3/4" O.D., 1/2" thick.

2. Each anchor bolt for a bridge deck installation shall have a diameter of 1", a total length of 3'-8", and a hook length of 4".

INDIANA DEPARTMENT OF TRANSPORTATION

ALUMINUM LIGHT POLE
WITH TRANSFORMER BASE

SEPTEMBER 2012

STANDARD DRAWING NO. E 807-LTST-02

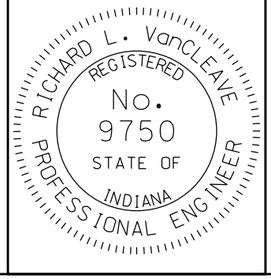

/s/ Richard L. VanCleave *09/04/12*
SUPERVISOR, ROADWAY STANDARDS DATE

/s/ Mark A. Miller *09/04/12*
CHIEF ENGINEER DATE

GENERAL NOTES

(1) If feasible, conduit to be installed on coping of bent; if not, install as shown on end of bridge not facing traffic.

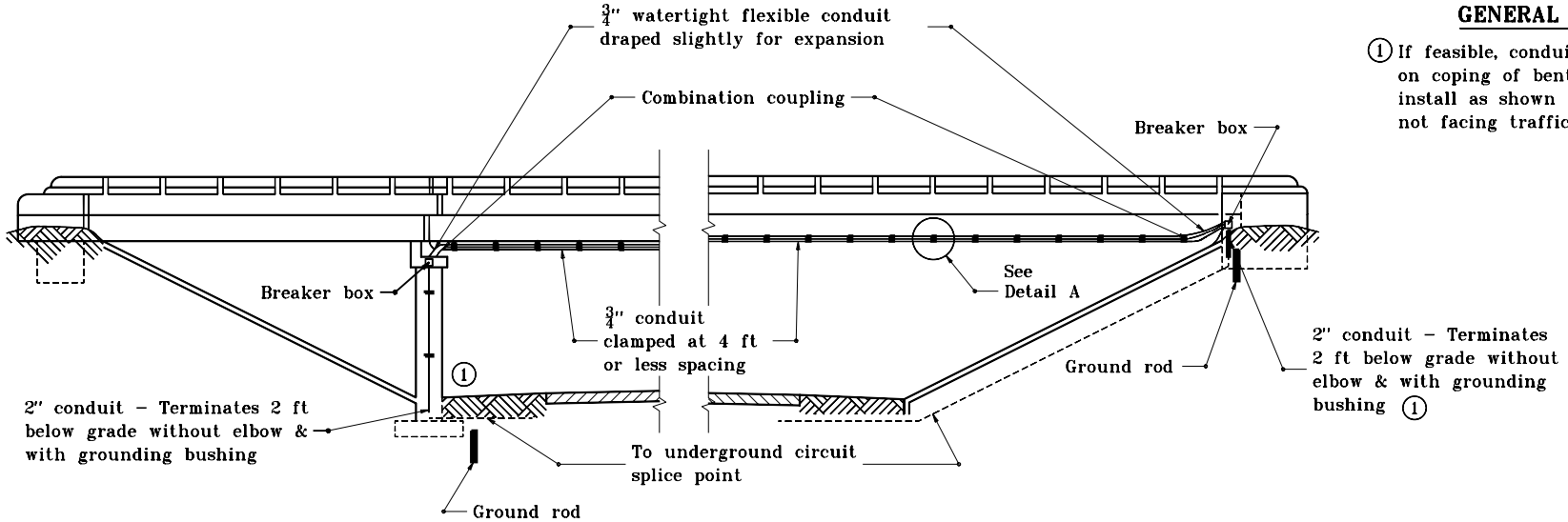

ELEVATION

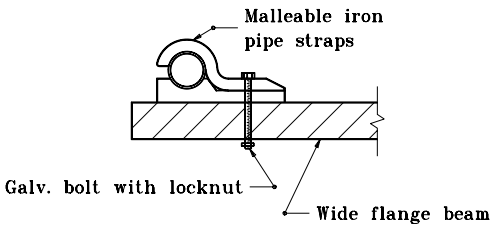

Steel Beam

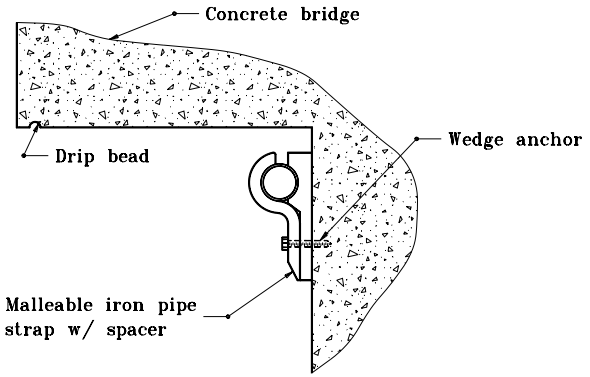

Concrete Beam

DETAIL A

INDIANA DEPARTMENT OF TRANSPORTATION

UNDERPASS LIGHTING DETAILS

MARCH 1995

STANDARD DRAWING NO. E 807-LTUP-01

ANTHONY L. UREMOVICH REGISTERED No. 18095 STATE OF INDIANA PROFESSIONAL ENGINEER

DESIGN STANDARDS ENGINEER

DETAILS PLACED IN THIS FORMAT 7-27-99

/s/ Anthony L. Uremovich 7-27-99
DESIGN STANDARDS ENGINEER DATE

/s/ Firooz Zandi 7-27-99
CHIEF HIGHWAY ENGINEER DATE

ORIGINALLY APPROVED 3-01-95

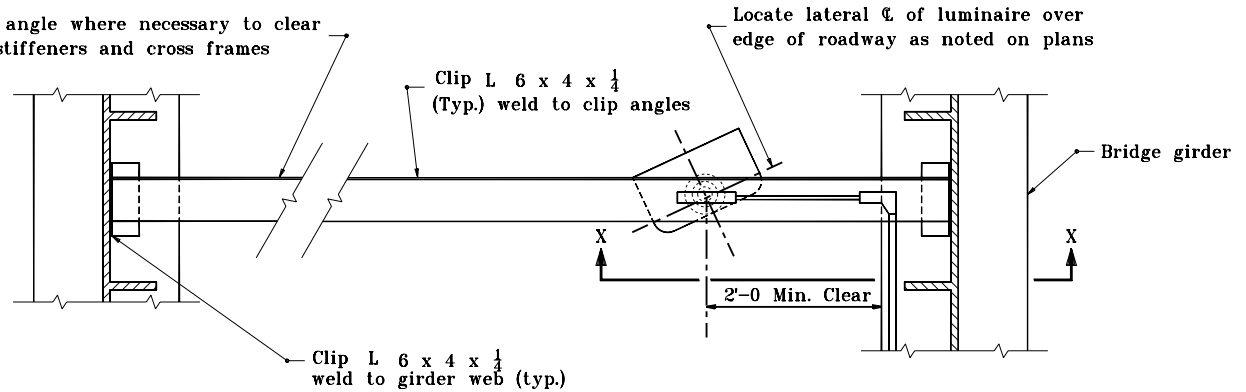

PLAN VIEW

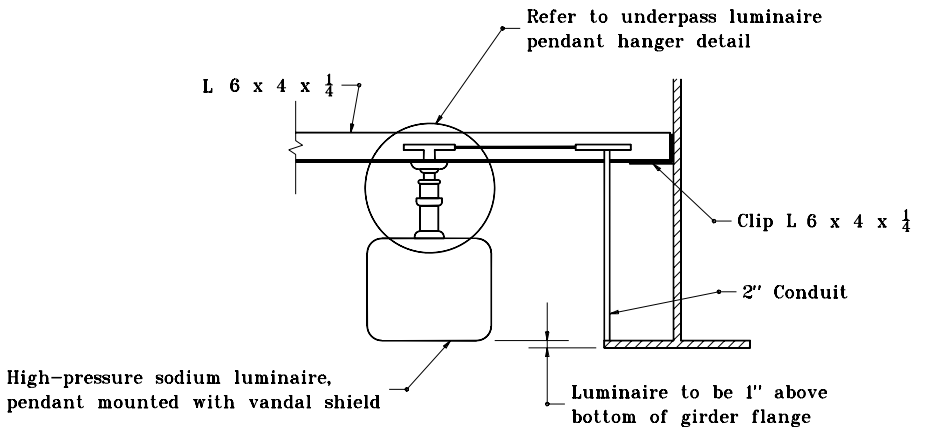

SECTION X–X

INDIANA DEPARTMENT OF TRANSPORTATION

UNDERPASS LIGHTING DETAILS PENDANT MOUNTING

JANUARY 2000

STANDARD DRAWING NO. **E 807–LTUP–02**

ANTHONY L. UREMOVICH REGISTERED No. 18095 STATE OF INDIANA PROFESSIONAL ENGINEER

DESIGN STANDARDS ENGINEER

/s/ Anthony L. Uremovich — DESIGN STANDARDS ENGINEER — 1–03–00 DATE

/s/ Firooz Zandi — CHIEF HIGHWAY ENGINEER — 1–03–00 DATE

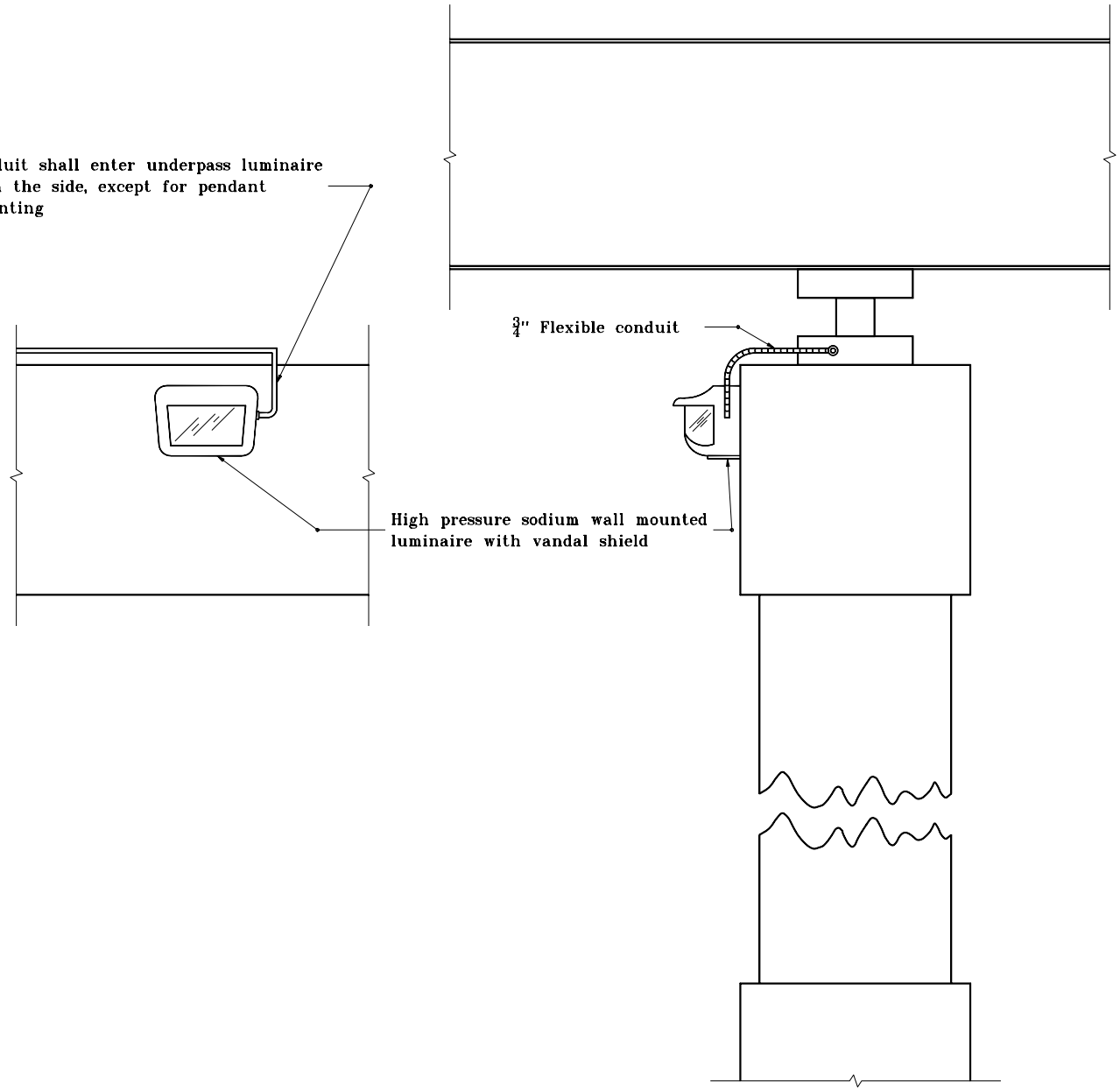

INDIANA DEPARTMENT OF TRANSPORTATION

UNDERPASS LIGHTING DETAILS WALL MOUNTING

MARCH 1995

STANDARD DRAWING NO. **E 807-LTUP-03**

ANTHONY L. UREMOVICH REGISTERED No. 18095 STATE OF INDIANA PROFESSIONAL ENGINEER

DESIGN STANDARDS ENGINEER

DETAILS PLACED IN THIS FORMAT 7-27-99

/s/ Anthony L. Uremovich 7-27-99
DESIGN STANDARDS ENGINEER — DATE

/s/ Firooz Zandi 7-27-99
CHIEF HIGHWAY ENGINEER — DATE

ORIGINALLY APPROVED 3-01-95

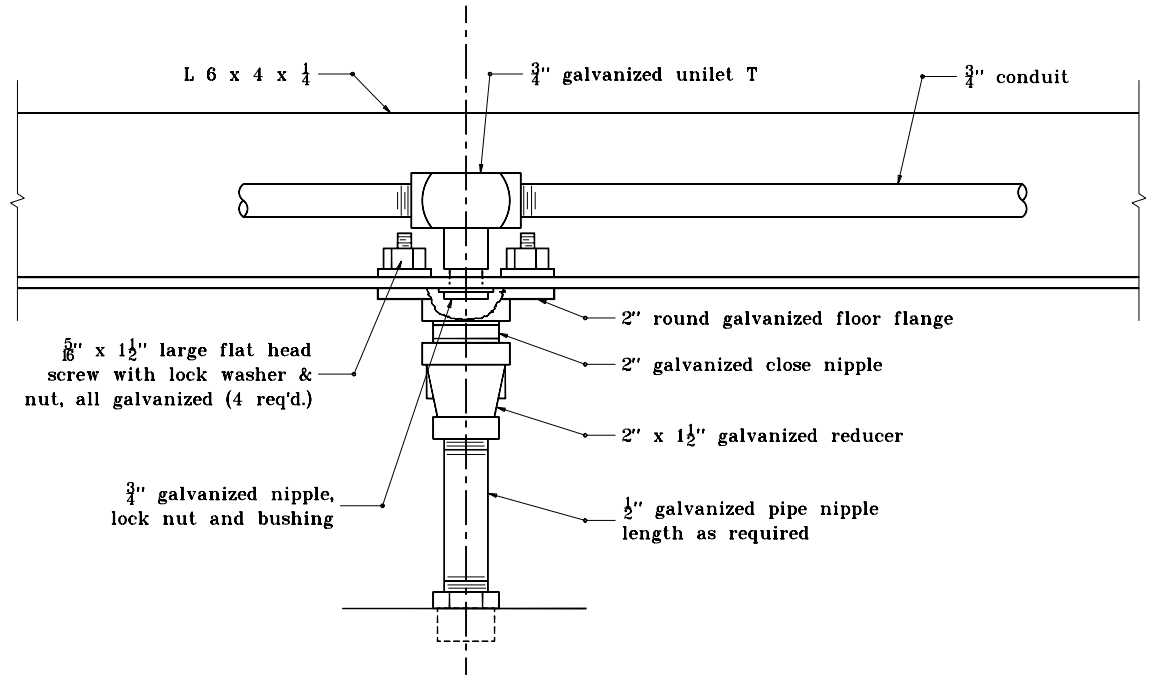

INDIANA DEPARTMENT OF TRANSPORTATION

UNDERPASS LIGHTING DETAILS
PENDANT HANGER DETAIL

JANUARY 2000

STANDARD DRAWING NO. **E 807-LTUP-04**

ANTHONY L. UREMOVICH REGISTERED No. 18095 STATE OF INDIANA PROFESSIONAL ENGINEER

DESIGN STANDARDS ENGINEER

/s/ Anthony L. Uremovich — DESIGN STANDARDS ENGINEER — 1-03-00 DATE

/s/ Firooz Zandi — CHIEF HIGHWAY ENGINEER — 1-03-00 DATE

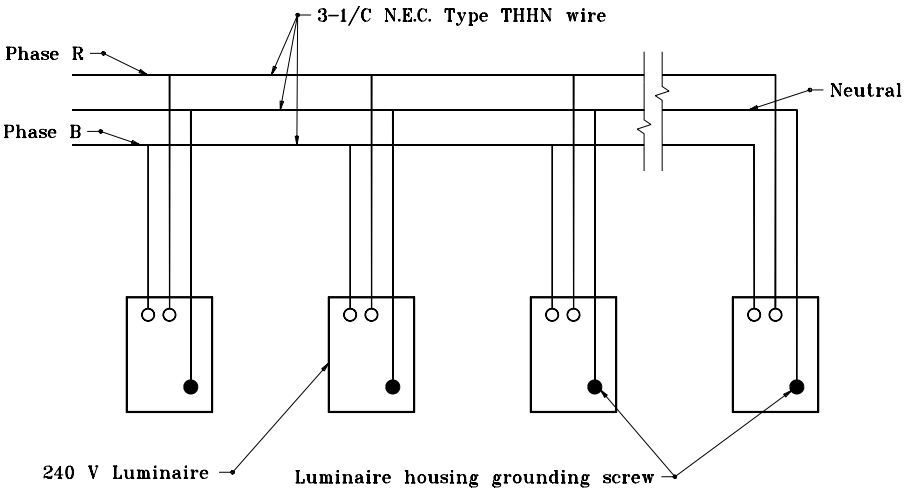

FOR CONNECTION TO 240 V PHASE TO PHASE

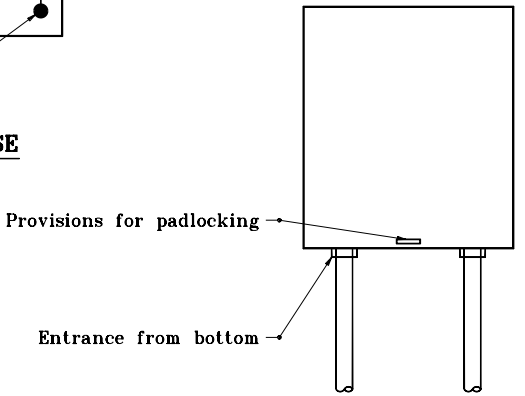

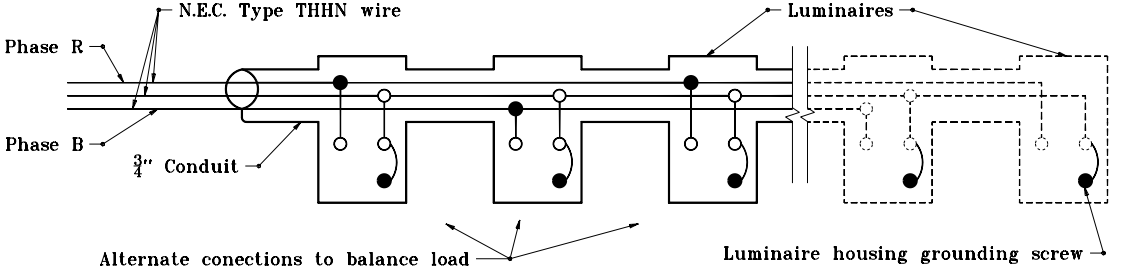

FOR CONNECTION TO 120 V OR 240 V PHASE TO NEUTRAL

INDIANA DEPARTMENT OF TRANSPORTATION

UNDERPASS LIGHTING DETAILS

LUMINAIRE WIRING DETAIL

JANUARY 2000

STANDARD DRAWING NO. **E 807-LTUP-05**

ANTHONY L. UREMOVICH REGISTERED No. 18095 STATE OF INDIANA PROFESSIONAL ENGINEER

DESIGN STANDARDS ENGINEER

/s/ Anthony L. Uremovich 1-03-00
DESIGN STANDARDS ENGINEER — DATE

/s/ Firooz Zandi 1-03-00
CHIEF HIGHWAY ENGINEER — DATE

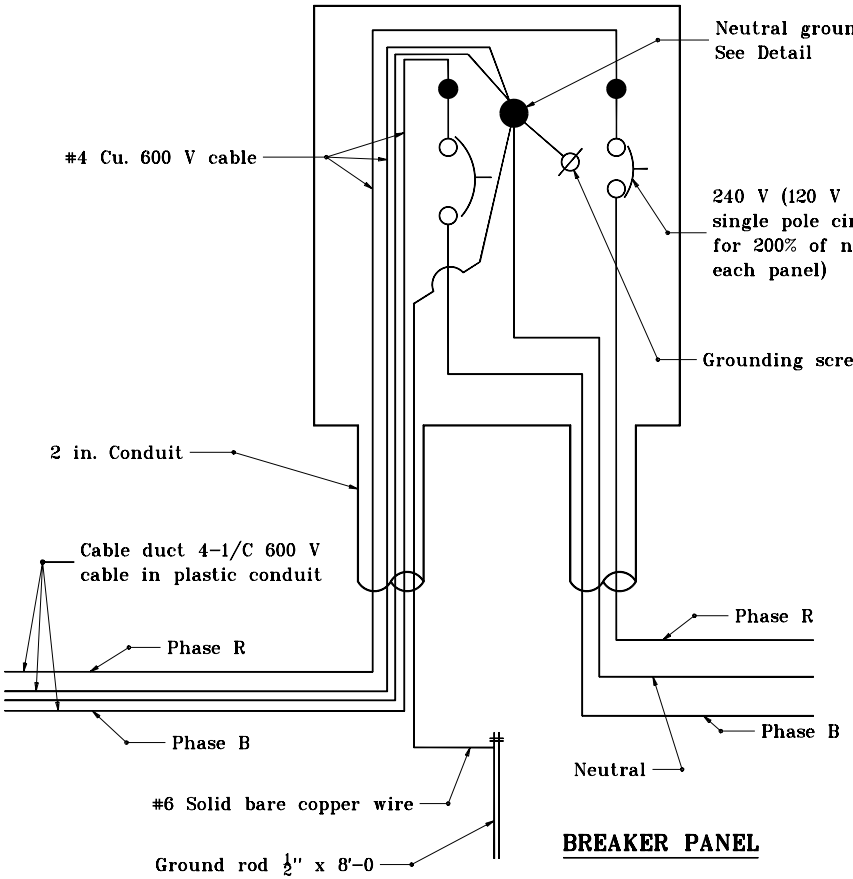

BREAKER PANEL

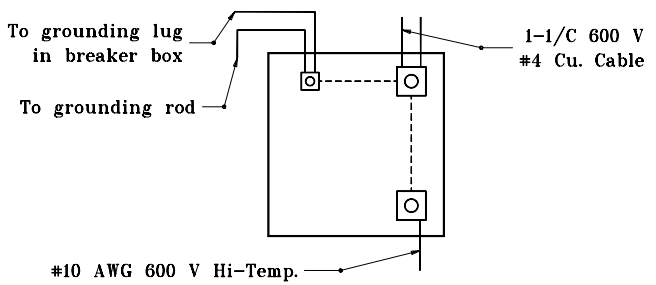

NEUTRAL GROUNDING LUG DETAIL

GENERAL NOTES

1. For all luminaire wiring from breaker panel, the last luminaire shall be #10 AWG stranded copper, 600 V.
2. Where sign illumination and underpass illumination are to be installed on the same structure, both sign and underpass luminaires may be connected to the same circuit.

INDIANA DEPARTMENT OF TRANSPORTATION

UNDERPASS LIGHTING DETAILS
CIRCUIT BREAKER WIRING DETAIL

MARCH 1995

STANDARD DRAWING NO. **E 807-LTUP-06**

ANTHONY L. UREMOVICH REGISTERED No. 18095 STATE OF INDIANA PROFESSIONAL ENGINEER

DESIGN STANDARDS ENGINEER

DETAILS PLACED IN THIS FORMAT 11-15-99

/s/ Anthony L. Uremovich 11-15-99
DESIGN STANDARDS ENGINEER DATE

/s/ Firooz Zandi 11-15-99
CHIEF HIGHWAY ENGINEER DATE

ORIGINALLY APPROVED 3-01-95

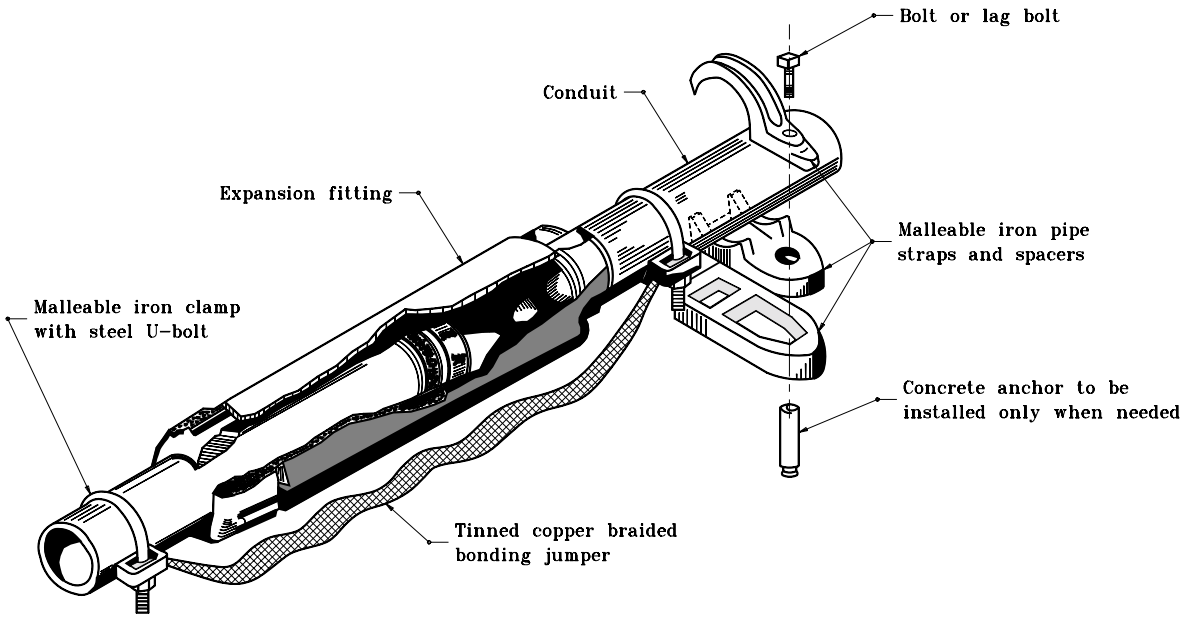

TYPICAL $\frac{3}{4}$ IN. AND 2 IN. DIAMETER EXPANSION FITTING WITH GROUNDING JUMPER

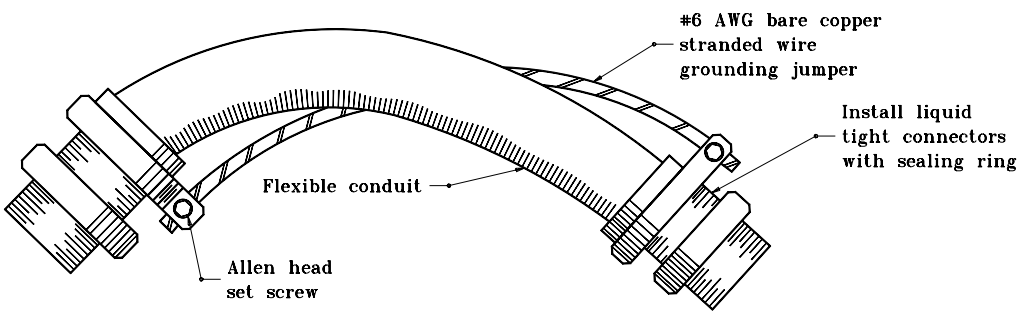

TYPICAL $\frac{3}{4}$ IN. AND 2 IN. DIAMETER FLEXIBLE CONDUIT WITH GROUNDING JUMPER

GENERAL NOTES

1. Malleable iron pipe straps to be installed immediately before and after the installed expansion fitting, to support expansion fitting and conduit.
2. Spacers shall be provided underneath the pipe strap to allow proper clearance between the bridge structure and the fitting.
3. Grounding jumper shall not be wrapped around flexible conduit, but slightly draped on one side.

INDIANA DEPARTMENT OF TRANSPORTATION

UNDERPASS LIGHTING DETAILS

MARCH 1995

STANDARD DRAWING NO. **E 807-LTUP-07**

ANTHONY L. UREMOVICH REGISTERED No. 18095 STATE OF INDIANA PROFESSIONAL ENGINEER

DESIGN STANDARDS ENGINEER

DETAILS PLACED IN THIS FORMAT	11-15-99
/s/ Anthony L. Uremovich	11-15-99
DESIGN STANDARDS ENGINEER	DATE
/s/ Firooz Zandi	11-15-99
CHIEF HIGHWAY ENGINEER	DATE
ORIGINALLY APPROVED	3-01-95

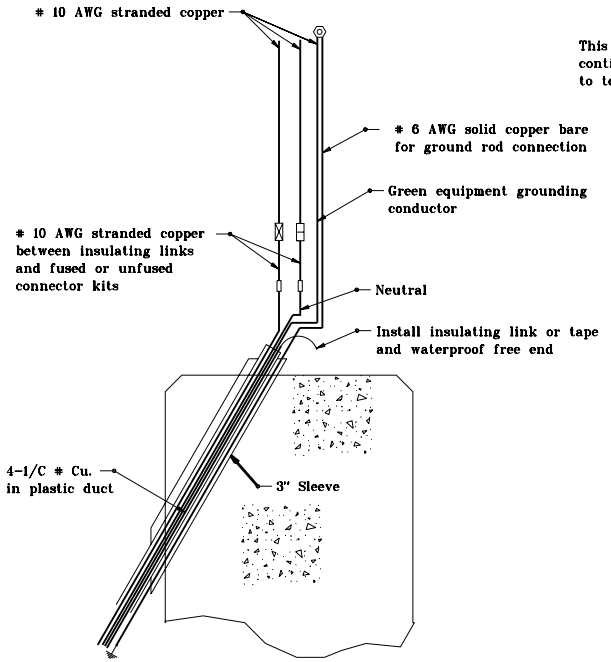

TYPE 1

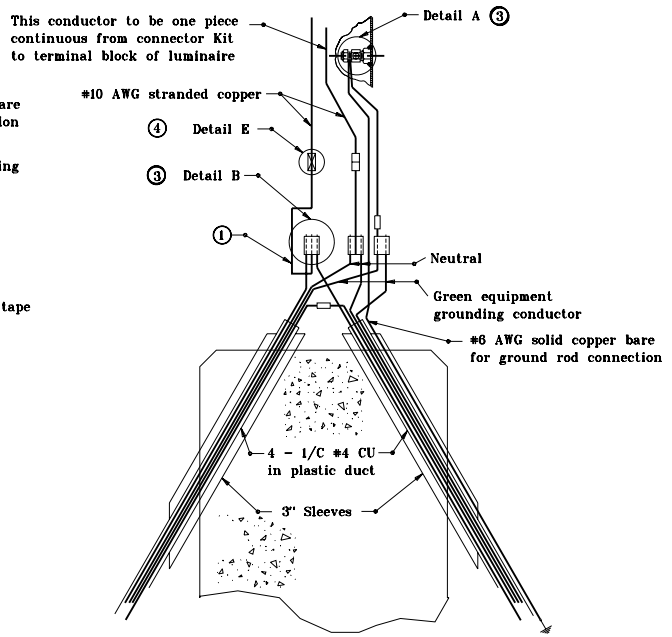

TYPE 2

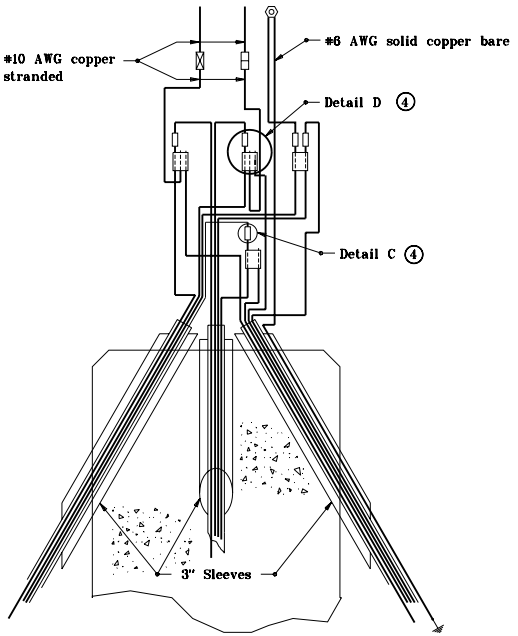

TYPE 3

CONNECTION TYPES

NOTES

(1) Allow sufficient conductor slack to permit the withdrawal of outside of pole handhole.

2. Use of inhibiting compound is mandatory for all connections.

(3) See Standard Drawing E 807-LTWR-02 for details.

(4) See Standard Drawing E 807-LTWR-03 for details.

LEGEND

- Grounding post
- Self insulated splicer (insulating link)
- Unfused connector
- Fused connector
- Compression connector

INDIANA DEPARTMENT OF TRANSPORTATION

LIGHTING WIRING DETAILS

JANUARY 1996

STANDARD DRAWING NO. E 807-LTWR-01

ANTHONY L. UREMOVICH REGISTERED No. 18095 STATE OF INDIANA PROFESSIONAL ENGINEER

DESIGN STANDARDS ENGINEER

DETAILS PLACED IN THIS FORMAT 11-15-99

/s/ Anthony L. Uremovich 11-15-99
DESIGN STANDARDS ENGINEER DATE

/s/ Firooz Zandi 11-15-99
CHIEF HIGHWAY ENGINEER DATE

ORIGINALLY APPROVED 1-02-96

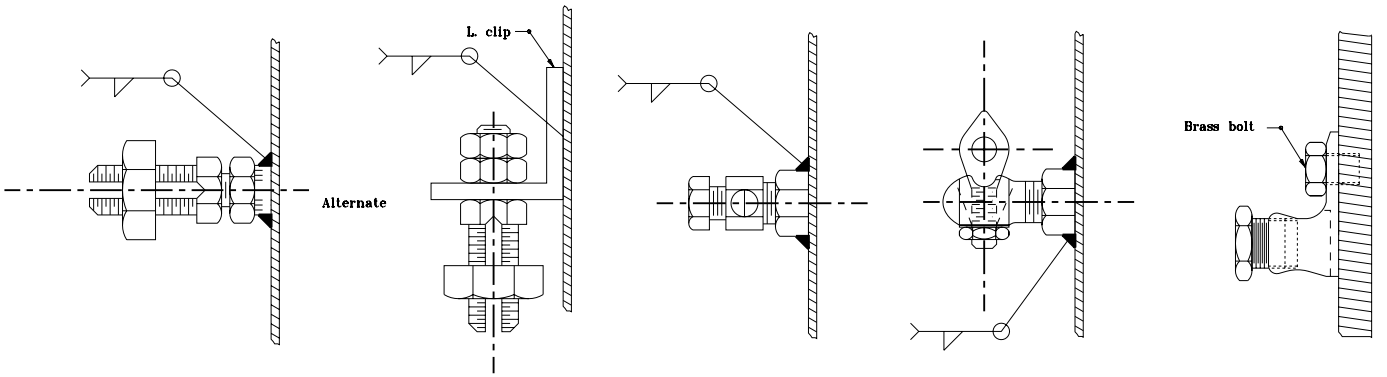

DETAIL A
ALTERNATIVE GROUNDING POSTS

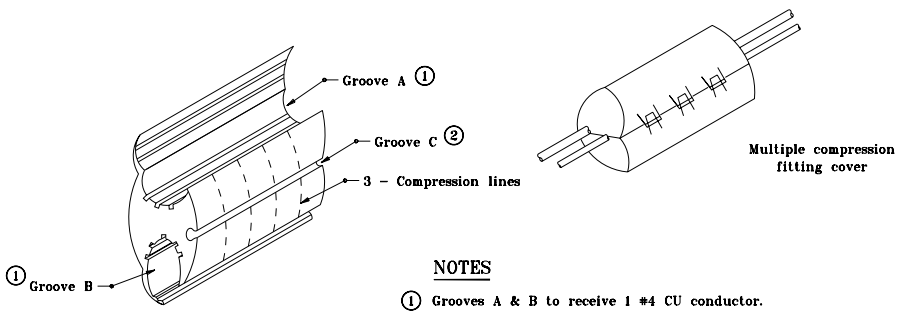

NOTES

① Grooves A & B to receive 1 #4 CU conductor.

② Groove C to receive 1 #10 CU conductor.

DETAIL B
MULTIPLE COMPRESSION FITTING

LEGEND

- Grounding post
- Self insulated splicer (insulating link)
- Unfused connector
- Fused connector
- Compression connector

INDIANA DEPARTMENT OF TRANSPORTATION

LIGHTING WIRING DETAILS

JANUARY 1996

STANDARD DRAWING NO. **E 807-LTWR-02**

ANTHONY L. UREMOVICH REGISTERED No. 18095 STATE OF INDIANA PROFESSIONAL ENGINEER

DESIGN STANDARDS ENGINEER

DETAILS PLACED IN THIS FORMAT	11-15-99
/s/ Anthony L. Uremovich	11-15-99
DESIGN STANDARDS ENGINEER	DATE
/s/ Firooz Zandi	11-15-99
CHIEF HIGHWAY ENGINEER	DATE
ORIGINALLY APPROVED	1-02-96

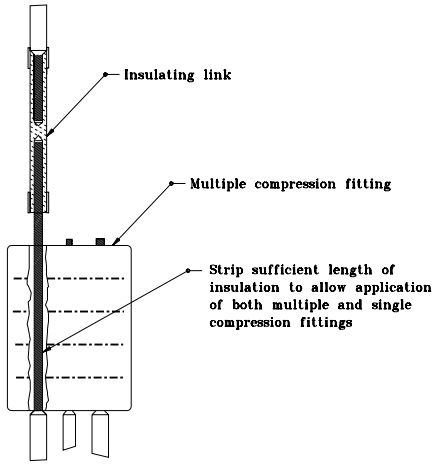

DETAIL D

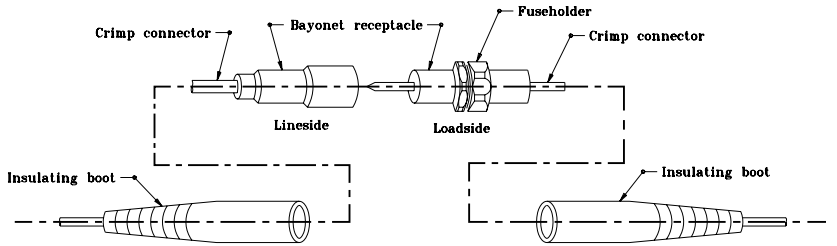

DETAIL E
BAYONET DISCONNECT CONNECTOR KIT

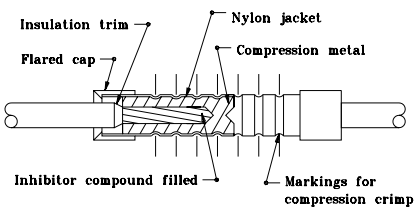

DETAIL C
INSULATING LINK

LEGEND

- Grounding post
- Self insulated splicer (insulating link)
- Unfused connector
- Fused connector
- Compression connector

INDIANA DEPARTMENT OF TRANSPORTATION

LIGHTING WIRING DETAILS

JANUARY 1996

STANDARD DRAWING NO. **E 807-LTWR-03**

ANTHONY L. UREMOVICH REGISTERED No. 18095 STATE OF INDIANA PROFESSIONAL ENGINEER

DESIGN STANDARDS ENGINEER

DETAILS PLACED IN THIS FORMAT	11-15-99
/s/ Anthony L. Uremovich DESIGN STANDARDS ENGINEER	11-15-99 DATE
/s/ Firooz Zandi CHIEF HIGHWAY ENGINEER	11-15-99 DATE
ORIGINALLY APPROVED	1-02-96

LEGEND

- Ground post
- Self insulated splicer (insulating link)
- Unfused connector
- Fused connecto
- Compression connector

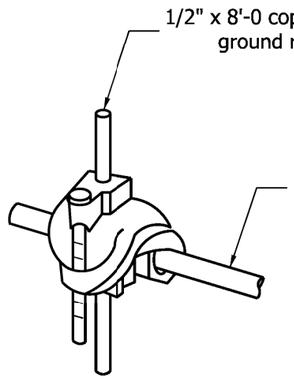

Grounding grid connector

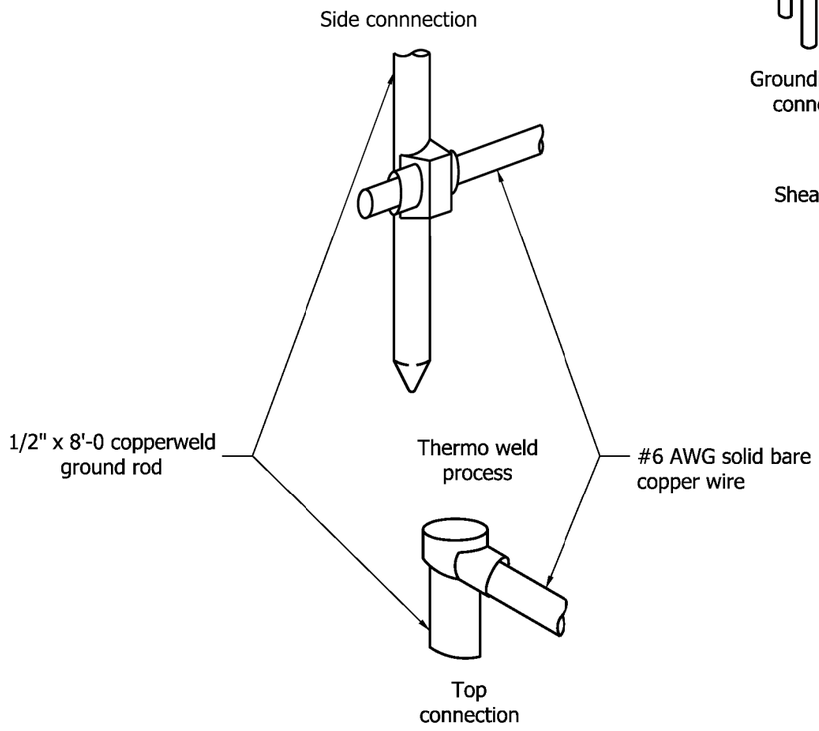

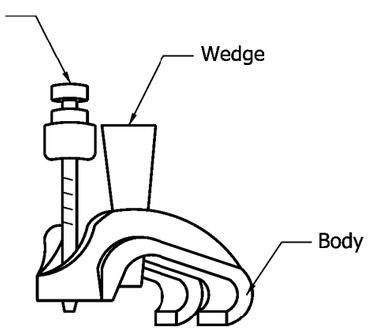

DETAIL F
TYPICAL GROUND ROD CONNECTION

INDIANA DEPARTMENT OF TRANSPORTATION

LIGHTING WIRING DETAILS

SEPTEMBER 2009

STANDARD DRAWING NO. E 807-LTWR-04

RICHARD L. VanCLEAVE REGISTERED No. 9750 STATE OF INDIANA PROFESSIONAL ENGINEER

DESIGN STANDARDS ENGINEER

/s/ Richard L. VanCleave 09/01/09
DESIGN STANDARDS ENGINEER DATE

/s/ Mark A. Miller 09/01/09
CHIEF HIGHWAY ENGINEER DATE

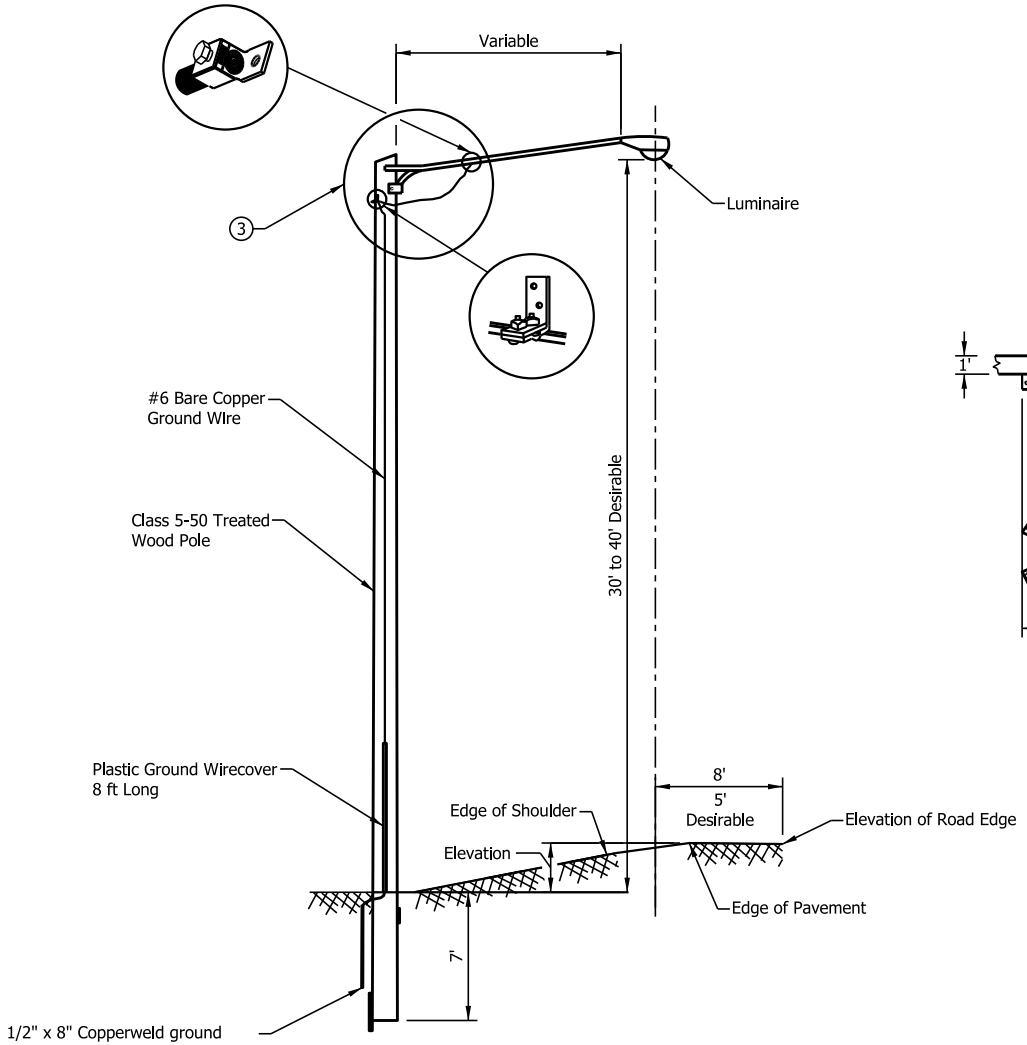

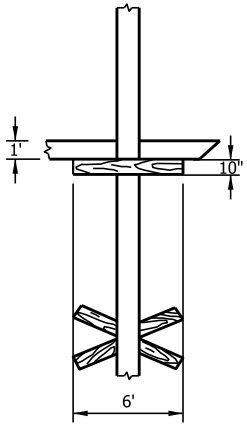

NOTES:

1. Install 2" x 10" x 6' treated plank 1' below ground surface with inner face directly against pole outer face to be placed against undisturbed earth as near as practical.
2. Pole key anchor and plank stabilizer to be installed at each major change of overhead line direction and at each end of lighting distribution.
3. See Section on Standard Drawing E 807-THID-02.
4. Luminaire shall be either a 400 Watt HPS or an alternative light source type with an equivalent light (lumen) output.

INDIANA DEPARTMENT OF TRANSPORTATION

TEMPORARY HIGHWAY ILLUMINATION DETAILS POLE AND LUMINAIRE

SEPTEMBER 2017

STANDARD DRAWING NO. E 807-THID-01

DAVID H. BORUFF REGISTERED No. 60900348 STATE OF INDIANA PROFESSIONAL ENGINEER

/s/ David H. Boruff 04/25/17
DESIGN STANDARDS ENGINEER DATE

/s/ John Leckie 04/27/17
CHIEF ENGINEER DATE

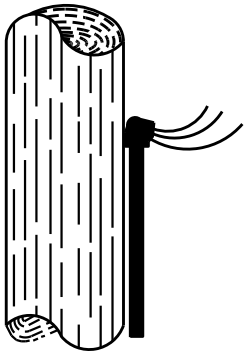

CONDUIT
RISER

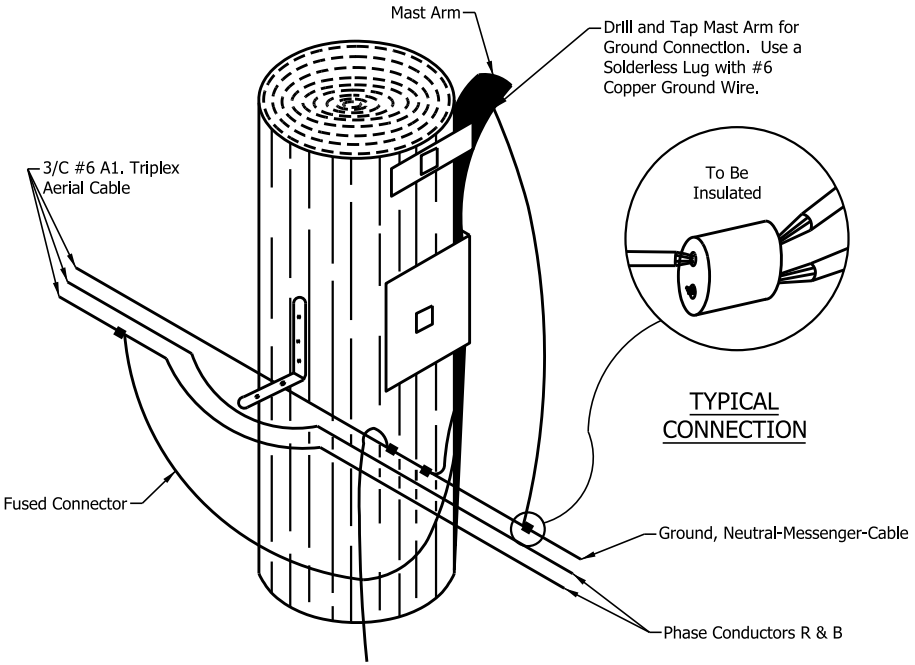

TYPICAL
CONNECTION

SECTION A
TYPICAL AERIAL LUMINAIRE
CONNECTION WITH GROUND

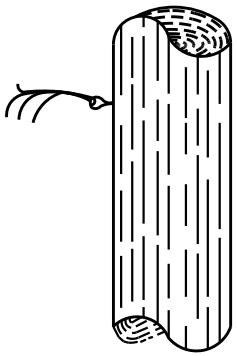

AERIAL CABLE
TERMINATION

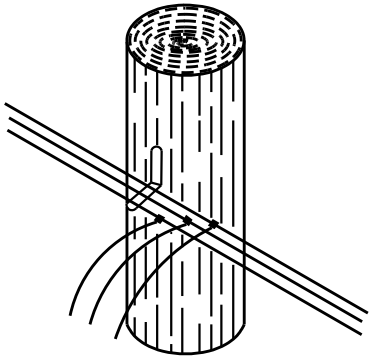

TYPICAL CIRCUIT
CONNECTION TO
AERIAL CABLE

INDIANA DEPARTMENT OF TRANSPORTATION

TEMPORARY HIGHWAY
ILLUMINATION DETAILS
WIRING

SEPTEMBER 2017

STANDARD DRAWING NO. E 807-THID-02

DAVID H. BORUFF
REGISTERED
No.
60900348
STATE OF
INDIANA
PROFESSIONAL ENGINEER

/s/ David H. Boruff 04/25/17
DESIGN STANDARDS ENGINEER DATE

/s/ John Leckie 04/27/17
CHIEF ENGINEER DATE

INDEX	
SHEET NO.	SUBJECT
1	Dotted Line Markings, Index and General Notes
2	Dotted Lines for Freeway Acceleration Lanes
3	Dotted Lines for Freeway Deceleration Lanes
4	Freeway Short Auxiliary Lanes and Extended Auxiliary Lanes
5	Freeway Lane Drops and Route Splits
6	Lane Drops at Intersections
7	Dotted Lines for Freeway Double Acceleration Lanes
8	Dotted Lines for Freeway Double Deceleration Lanes
9	Major Diverge or Route Split with Option Lane

GENERAL NOTES:

1. The dotted line details for freeways shall also apply to collector distributor roads that are part of a freeway.

2. The dotted line details shall also apply to interchanges on the state highway system.

INDIANA DEPARTMENT OF TRANSPORTATION

DOTTED LINE MARKINGS
INDEX AND GENERAL NOTES

SEPTEMBER 2023

STANDARD DRAWING NO. E 808-DLIM-01

DAVID H. BORUFF
REGISTERED
No.
60900348
STATE OF
INDIANA
PROFESSIONAL ENGINEER

05/04/23
DESIGN STANDARDS ENGINEER DATE

05/08/2023
CHIEF ENGINEER DATE

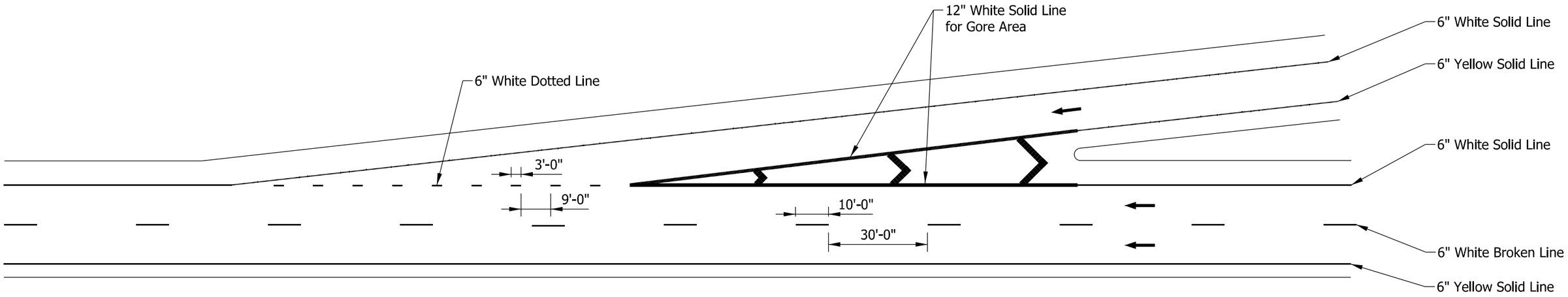

TAPERED ACCELERATION LANE

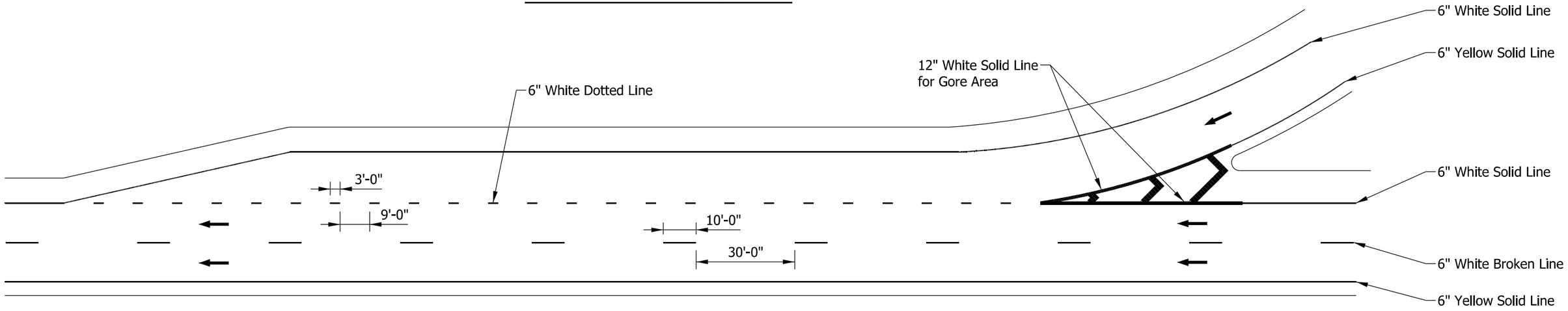

PARALLEL ACCELERATION LANE

NOTE:

1. The 12 in. white solid lines for gore areas shall connect at the theoretical gore.

INDIANA DEPARTMENT OF TRANSPORTATION

DOTTED LINES FOR FREEWAY
ACCELERATION LANES

SEPTEMBER 2026

STANDARD DRAWING NO. E 808-DLIM-02

DAVID H. BORUFF
REGISTERED
No.
60900348
STATE OF
INDIANA
PROFESSIONAL ENGINEER

David H Boruff 4/28/2026
DESIGN STANDARDS ENGINEER DATE

04/29/2026
CHIEF ENGINEER DATE

NOTES:

1. White chevron markings shall be 24 in. wide and spaced 40 ft apart.
2. The 12 in. white solid lines for gore areas shall connect at the theoretical gore.

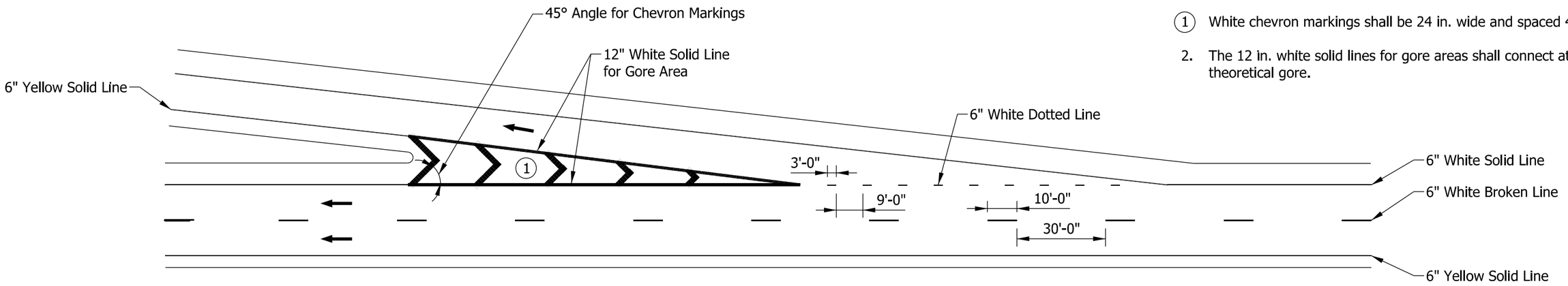

TAPERED DECELERATION LANE

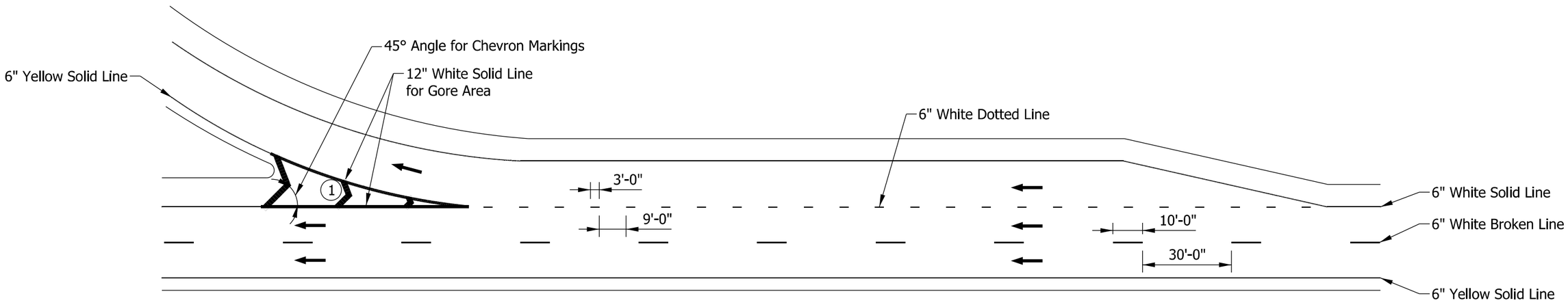

PARALLEL DECELERATION LANE

INDIANA DEPARTMENT OF TRANSPORTATION

DOTTED LINES FOR FREEWAY DECELERATION LANES

SEPTEMBER 2026

STANDARD DRAWING NO. E 808-DLIM-03

DAVID H. BORUFF
REGISTERED
No. 60900348
STATE OF INDIANA
PROFESSIONAL ENGINEER

David H Boruff 4/28/2026
DESIGN STANDARDS ENGINEER DATE

04/29/2026
CHIEF ENGINEER DATE

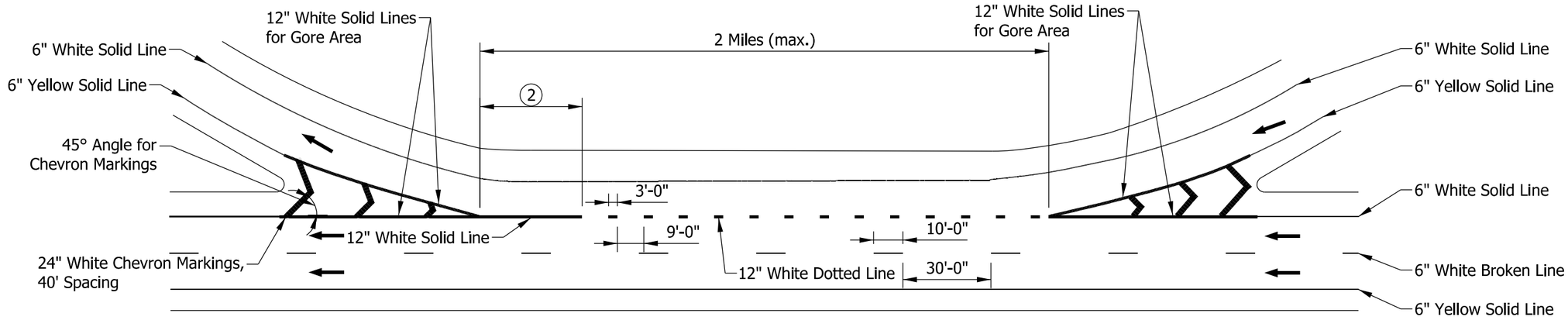

AUXILIARY LANE LESS THAN 2 MILES

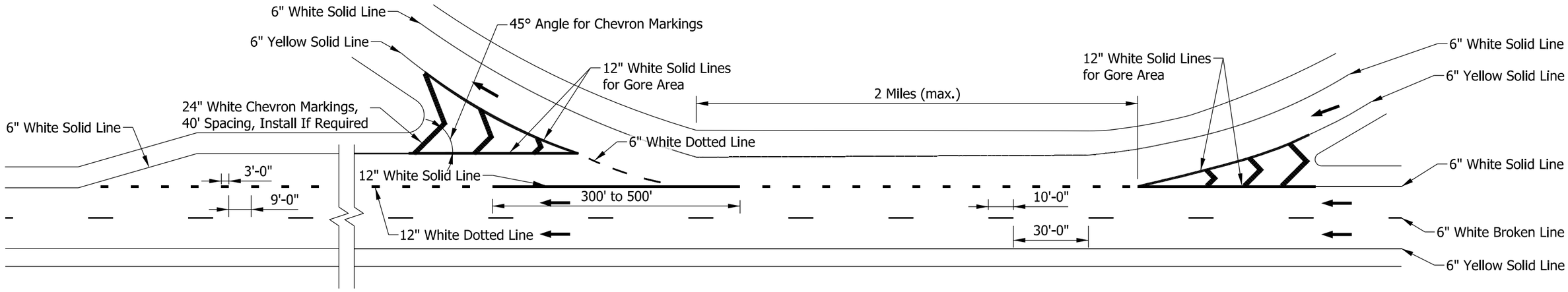

EXTENDED AUXILIARY LANE

NOTES:

1. The 12 in. white solid lines for gore areas shall connect at the theoretical gore.

(2) This dimension is typically:
100 ft if the auxiliary lane is less than a half mile
300 ft if the auxiliary lane is between a half mile and a mile
600 ft if the auxiliary lane is greater than a mile but less than two miles.

INDIANA DEPARTMENT OF TRANSPORTATION

FREEWAY SHORT AUXILIARY LANES AND EXTENDED AUXILIARY LANES

SEPTEMBER 2026

STANDARD DRAWING NO. E 808-DLIM-04

DAVID H. BORUFF
REGISTERED
No. 60900348
STATE OF INDIANA
PROFESSIONAL ENGINEER

David H Boruff 4/28/2026
DESIGN STANDARDS ENGINEER DATE

04/29/2026
CHIEF ENGINEER DATE

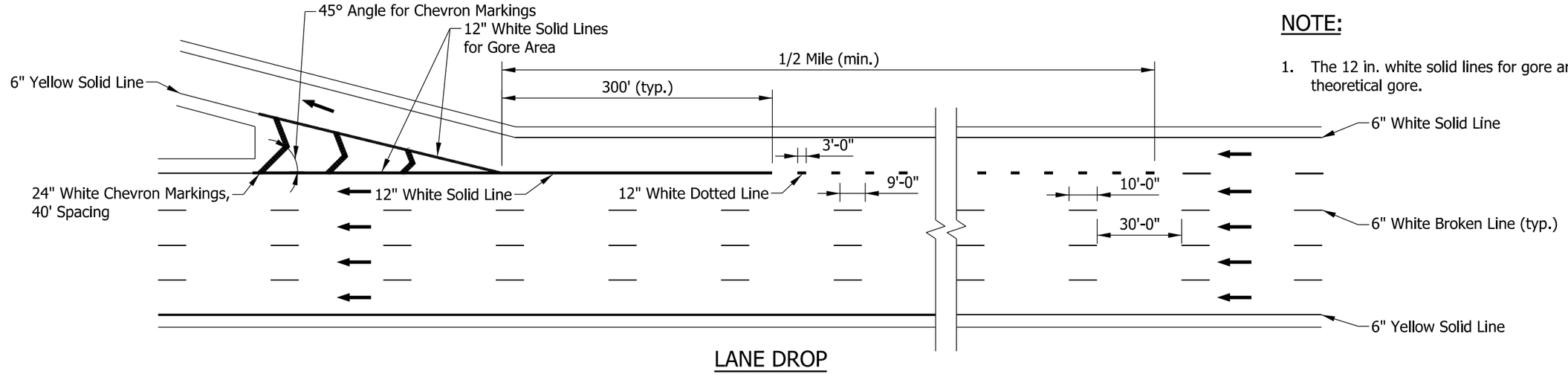

LANE DROP

NOTE:

1. The 12 in. white solid lines for gore areas shall connect at the theoretical gore.

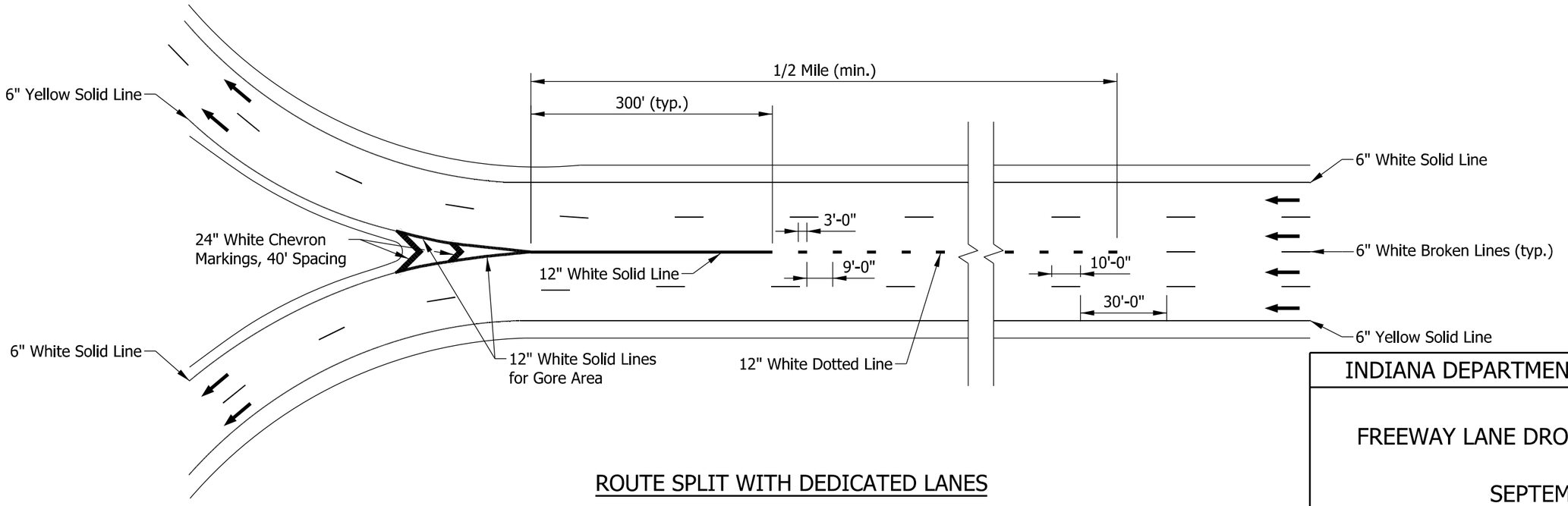

ROUTE SPLIT WITH DEDICATED LANES

INDIANA DEPARTMENT OF TRANSPORTATION

FREEWAY LANE DROPS AND ROUTE SPLITS

SEPTEMBER 2026

STANDARD DRAWING NO. E 808-DLIM-05

DAVID H. BORUFF REGISTERED No. 60900348 STATE OF INDIANA PROFESSIONAL ENGINEER

David H Boruff 4/28/2026

DESIGN STANDARDS ENGINEER DATE

04/29/2026

CHIEF ENGINEER DATE

NOTES:

1. The dotted line shall be extended to the lesser of 300 ft or the nearest intersection
2. 6 in. white dotted lines shall be required at dual turn lanes.

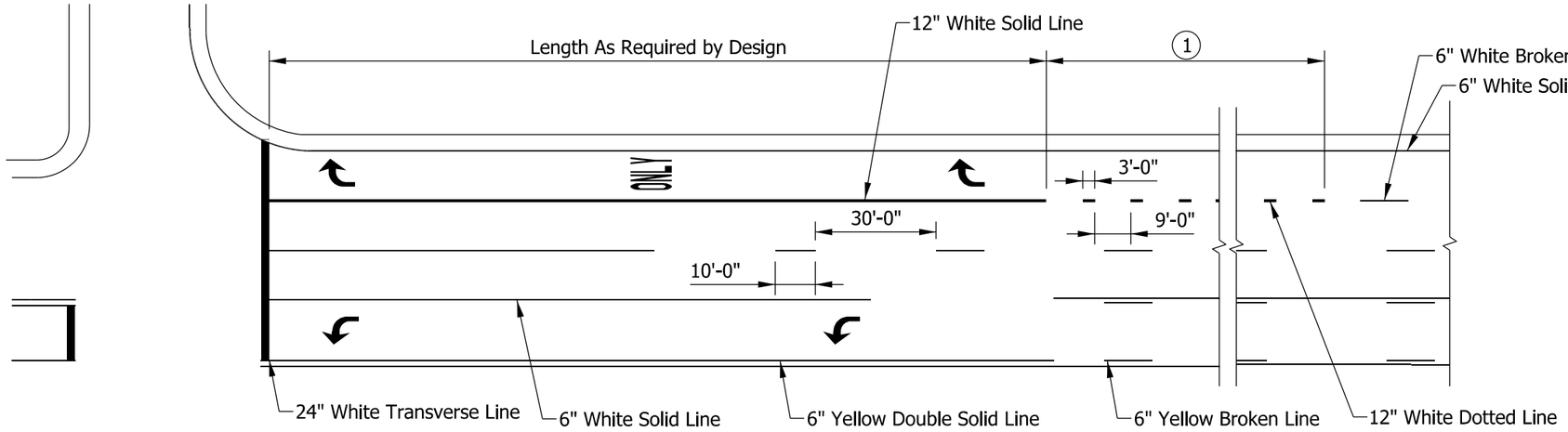

LANE DROP ON A MULTILANE UNDIVIDED HIGHWAY

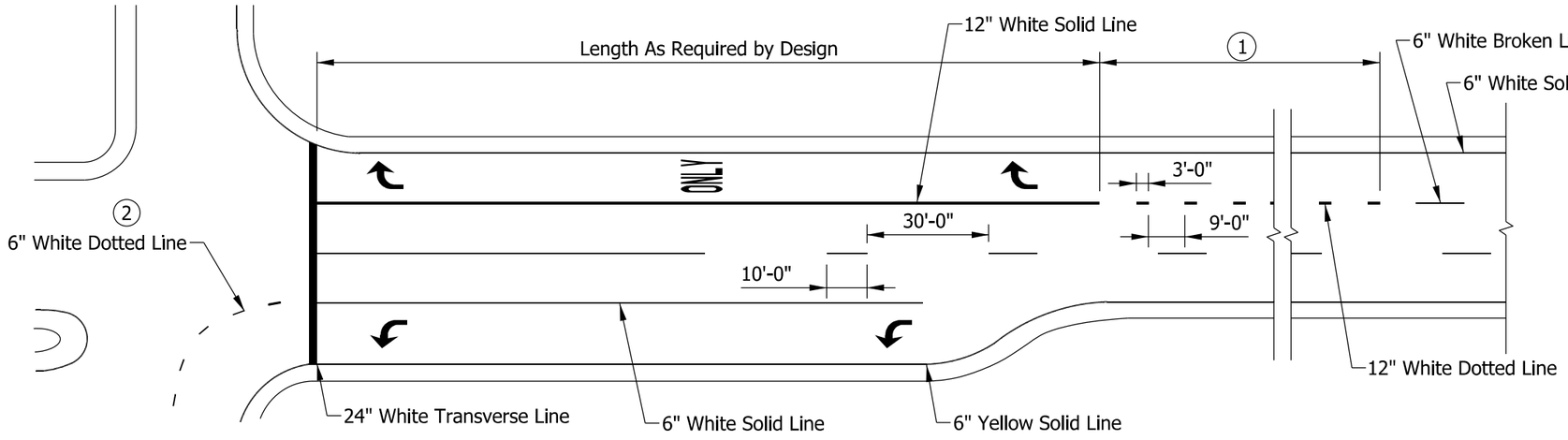

LANE DROP ON A MULTILANE DIVIDED HIGHWAY

INDIANA DEPARTMENT OF TRANSPORTATION

LANE DROPS AT INTERSECTIONS

SEPTEMBER 2026

STANDARD DRAWING NO. E 808-DLIM-06

DAVID H. BORUFF REGISTERED No. 60900348 STATE OF INDIANA PROFESSIONAL ENGINEER

David H Boruff 4/28/2026

DESIGN STANDARDS ENGINEER DATE

04/29/2026

CHIEF ENGINEER DATE

NOTE:

1. The 12 in. white solid lines for gore areas shall connect at the theoretical gore.

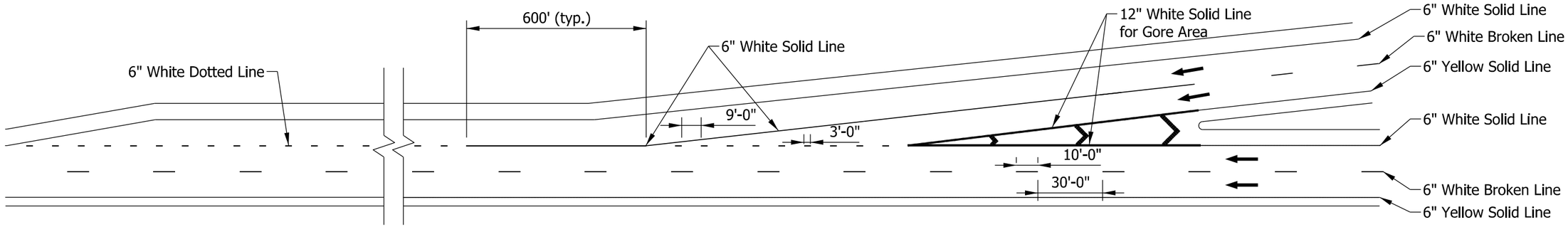

TAPERED ACCELERATION LANE FOR MAINTENANCE AND RESURFACE CONTRACTS ONLY

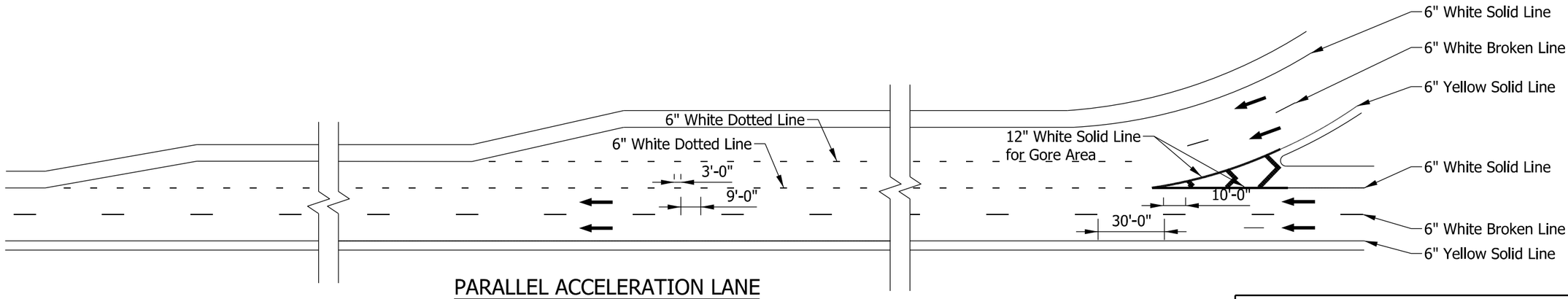

PARALLEL ACCELERATION LANE

INDIANA DEPARTMENT OF TRANSPORTATION

DOTTED LINES FOR FREEWAY
DOUBLE ACCELERATION LANES

SEPTEMBER 2026

STANDARD DRAWING NO. E 808-DLIM-07

DAVID H. BORUFF
REGISTERED
No. 60900348
STATE OF INDIANA
PROFESSIONAL ENGINEER

David H Boruff 4/28/2026
DESIGN STANDARDS ENGINEER DATE

04/29/2026
CHIEF ENGINEER DATE

NOTES:

1. White chevron markings shall be 24 in. wide and spaced 40 ft apart.
2. Elongated pavement message arrows shall be installed, if required by designer.
3. The 12 in. white solid lines for gore areas shall connect at the theoretical gore.

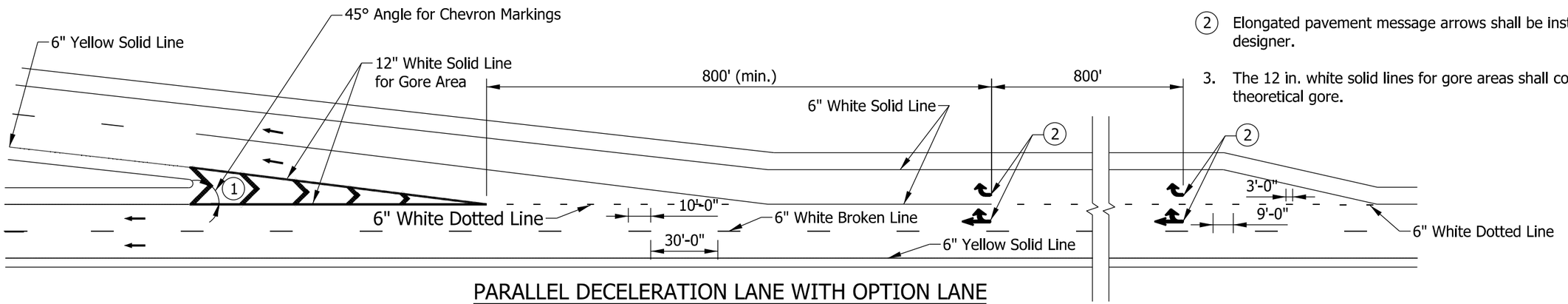

PARALLEL DECELERATION LANE WITH OPTION LANE

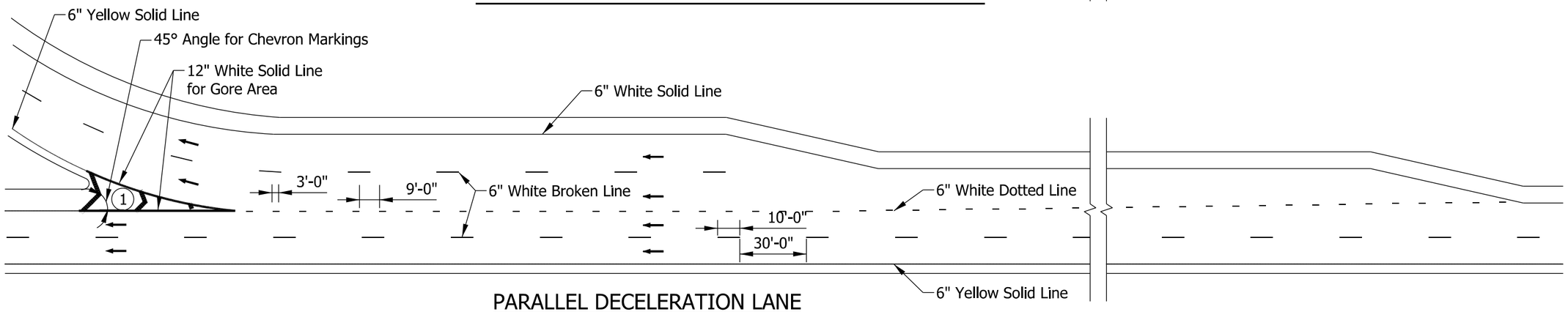

PARALLEL DECELERATION LANE

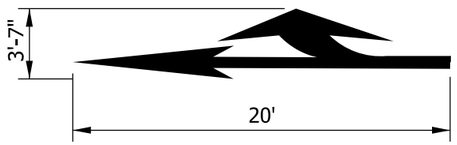

COMBO ARROW

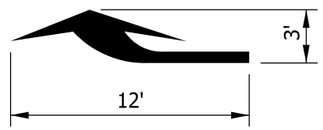

TURN ARROW

INDIANA DEPARTMENT OF TRANSPORTATION

DOTTED LINES FOR FREEWAY
DOUBLE DECELERATION LANES

SEPTEMBER 2026

STANDARD DRAWING NO. E 808-DLIM-08

DAVID H. BORUFF
REGISTERED
No. 60900348
STATE OF INDIANA
PROFESSIONAL ENGINEER

David H Boruff 4/28/2026
DESIGN STANDARDS ENGINEER DATE

04/29/2026
CHIEF ENGINEER DATE

NOTES:

1. Elongated pavement message arrows shall be installed, if required by designer.
2. The 12 in. white solid lines for gore areas shall connect at the theoretical gore.

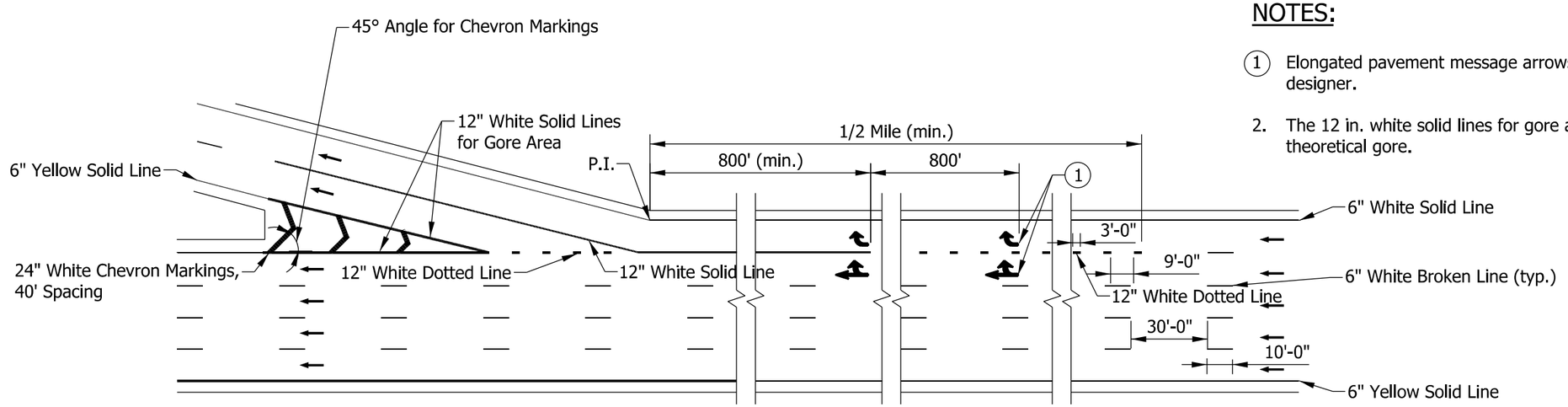

MAJOR DIVERGE WITH OPTION LANE

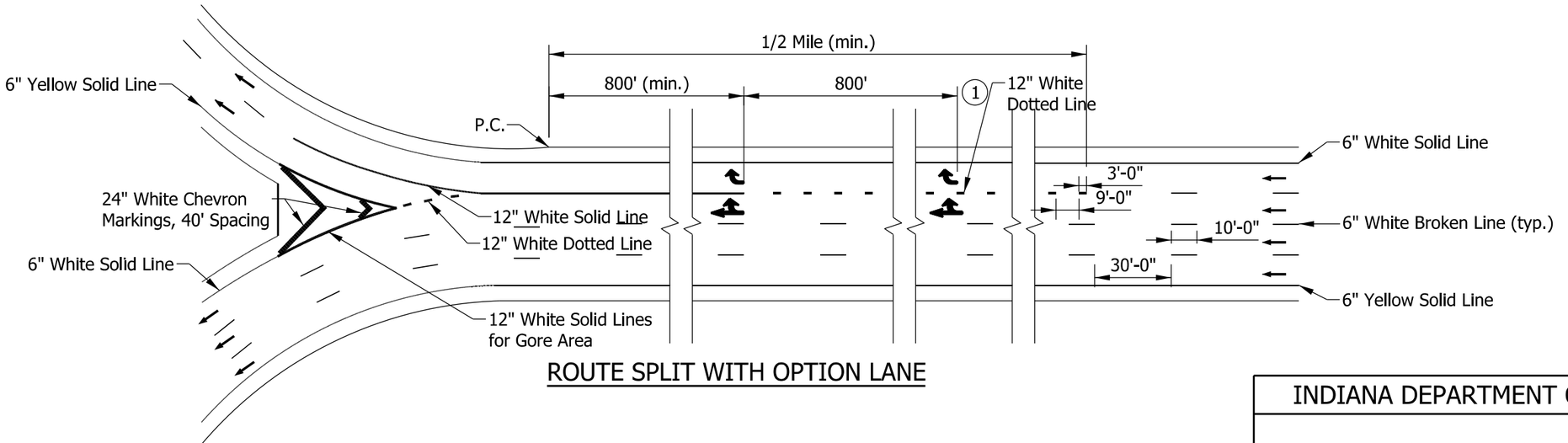

ROUTE SPLIT WITH OPTION LANE

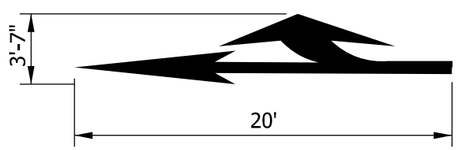

COMBO ARROW

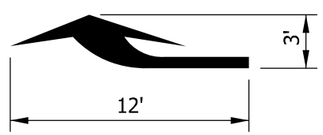

TURN ARROW

INDIANA DEPARTMENT OF TRANSPORTATION

MAJOR DIVERGE OR ROUTE SPLIT WITH OPTION LANE

SEPTEMBER 2026

STANDARD DRAWING NO. E 808-DLIM-09

DAVID H. BORUFF REGISTERED No. 60900348 STATE OF INDIANA PROFESSIONAL ENGINEER

4/28/2026
DESIGN STANDARDS ENGINEER DATE

04/29/2026
CHIEF ENGINEER DATE

INDEX	
SHEET NO.	SUBJECT
1	Narrow Bridge Markings, Index and General Notes
2	Narrow Bridge Markings on Two Lane Road
3	Narrow Bridge Markings at One Lane Bridge
4	Narrow Bridge Markings on Divided Highway

GENERAL NOTES:

1. No passing zone signs shall be used if AADT is greater than 750 or the posted speed limit is 50 mph or greater.
2. A bridge or culvert, with a clear roadway of 18 ft to 22 ft inclusive, or where the bridge railing or other vertical surface is less than 2 ft from the edge of pavement, will be considered a narrow bridge. The W5-2 sign shall be installed for this condition.
4. A bridge or culvert with less than 18 ft between opposite vertical surfaces will be considered a one lane bridge. The W5-3 sign shall be installed for this condition.
5. Delineators shall be used if the AADT is greater than 500 at a narrow bridge or if the AADT is greater than 250 at a one lane bridge.
6. Linear delineation systems may be used on barrier wall or guardrail instead of spacing other delineator types at 50 ft intervals.
7. If specified, D1 delineators shall be used in place of flexible delineators in advance of the narrow bridge and D3 delineators shall be used in place of flexible delineators on the approach segments with guardrail. The three acrylic plastic delineators on each D3 delineator shall be spaced 5 in. apart, center-to-center.

LEGEND

- DP — Flexible Delineator Post
- Sheet Sign and Supports
- Guardrail
- Barrier Delineator
- Direction of Traffic

INDIANA DEPARTMENT OF TRANSPORTATION

NARROW BRIDGE MARKINGS,
INDEX AND GENERAL NOTES

SEPTEMBER 2023

STANDARD DRAWING NO. E 808-MKNB-01

DAVID H. BORUFF
REGISTERED
No. 60900348
STATE OF INDIANA
PROFESSIONAL ENGINEER

David H Boruff 05/04/23
DESIGN STANDARDS ENGINEER DATE

05/08/2023
CHIEF ENGINEER DATE

NOTE:

① The minimum length of the no passing zone at narrow bridges, if marked, shall be the passing sight distance.

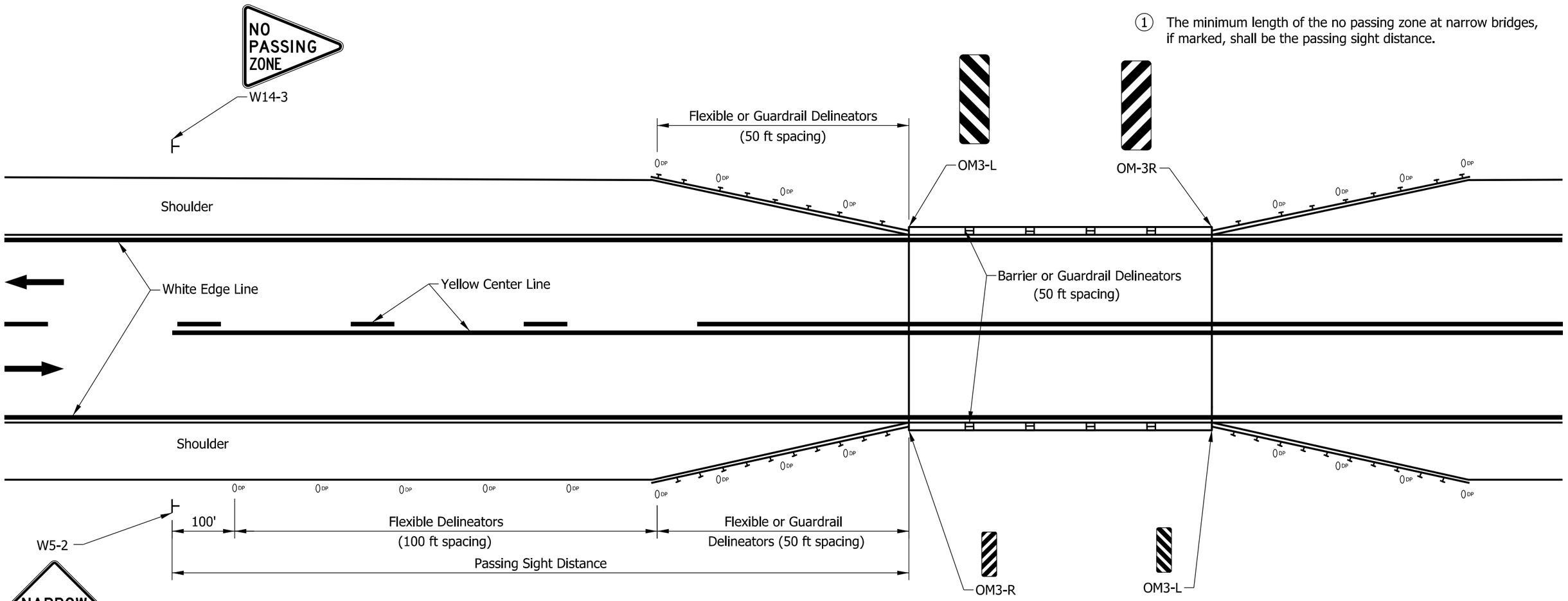

POSTED SPEED (mph)	PASSING ① SIGHT DISTANCE (ft)
25	450
30	500
35	550
40	600
45	700
50	800
55	900

LEGEND

- DP — Flexible Delineator Post
- Sheet Sign and Supports
- Guardrail
- Barrier Delineator
- Direction of Traffic

INDIANA DEPARTMENT OF TRANSPORTATION

NARROW BRIDGE MARKINGS ON TWO LANE ROAD

SEPTEMBER 2023

STANDARD DRAWING NO. E 808-MKNB-02

DAVID H. BORUFF REGISTERED No. 60900348 STATE OF INDIANA PROFESSIONAL ENGINEER

05/04/23
DESIGN STANDARDS ENGINEER DATE

05/08/2023
CHIEF ENGINEER DATE

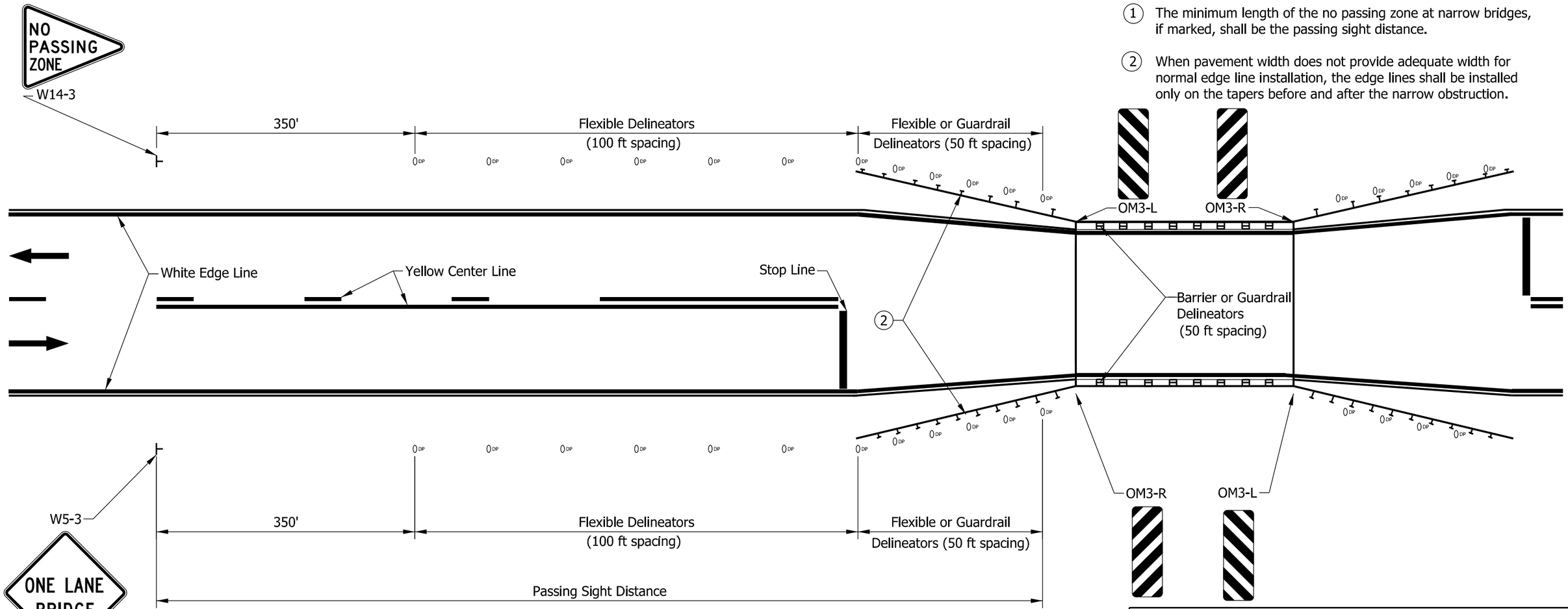

NOTES:

1. The minimum length of the no passing zone at narrow bridges, if marked, shall be the passing sight distance.
2. When pavement width does not provide adequate width for normal edge line installation, the edge lines shall be installed only on the tapers before and after the narrow obstruction.

LEGEND

- DP — Flexible Delineator Post
- Sheet Sign and Supports
- Guardrail
- Barrier Delineator
- Direction of Traffic

POSTED SPEED (mph)	PASSING ① SIGHT DISTANCE (ft)
25	450
30	500
35	550
40	600
45	700
50	800
55	900

INDIANA DEPARTMENT OF TRANSPORTATION

NARROW BRIDGE MARKINGS AT ONE LANE BRIDGE

SEPTEMBER 2023

STANDARD DRAWING NO. E 808-MKNB-03

DAVID H. BORUFF REGISTERED No. 60900348 STATE OF INDIANA PROFESSIONAL ENGINEER

05/04/23
DESIGN STANDARDS ENGINEER — DATE

05/08/2023
CHIEF ENGINEER — DATE

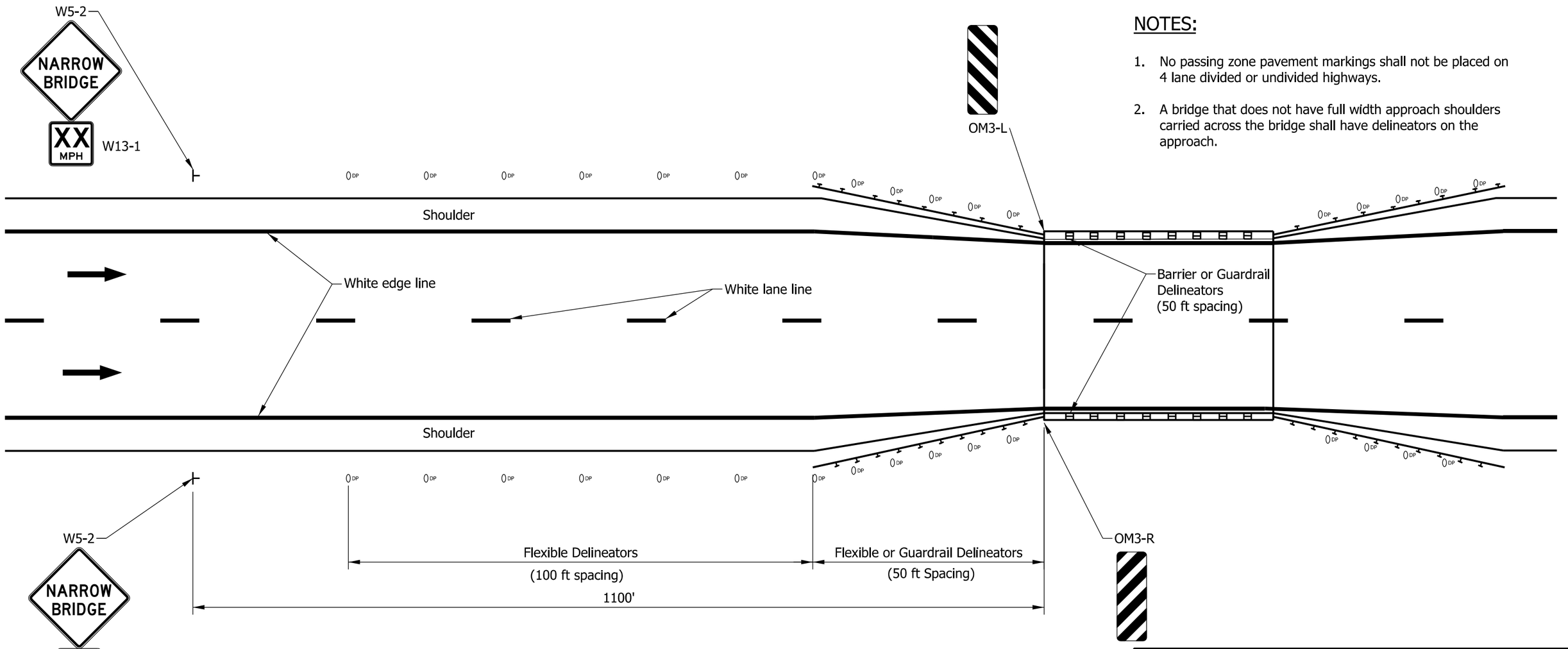

NOTES:

1. No passing zone pavement markings shall not be placed on 4 lane divided or undivided highways.
2. A bridge that does not have full width approach shoulders carried across the bridge shall have delineators on the approach.

LEGEND

- DP — Flexible Delineator Post
- Sheet Sign and Supports
- Guardrail
- Barrier Delineator
- Direction of Traffic

INDIANA DEPARTMENT OF TRANSPORTATION

NARROW BRIDGE MARKINGS ON DIVIDED HIGHWAY

SEPTEMBER 2023

STANDARD DRAWING NO. E 808-MKNB-04

DAVID H. BORUFF REGISTERED No. 60900348 STATE OF INDIANA PROFESSIONAL ENGINEER

DESIGN STANDARDS ENGINEER — DATE 05/04/23

CHIEF ENGINEER — DATE 05/08/2023

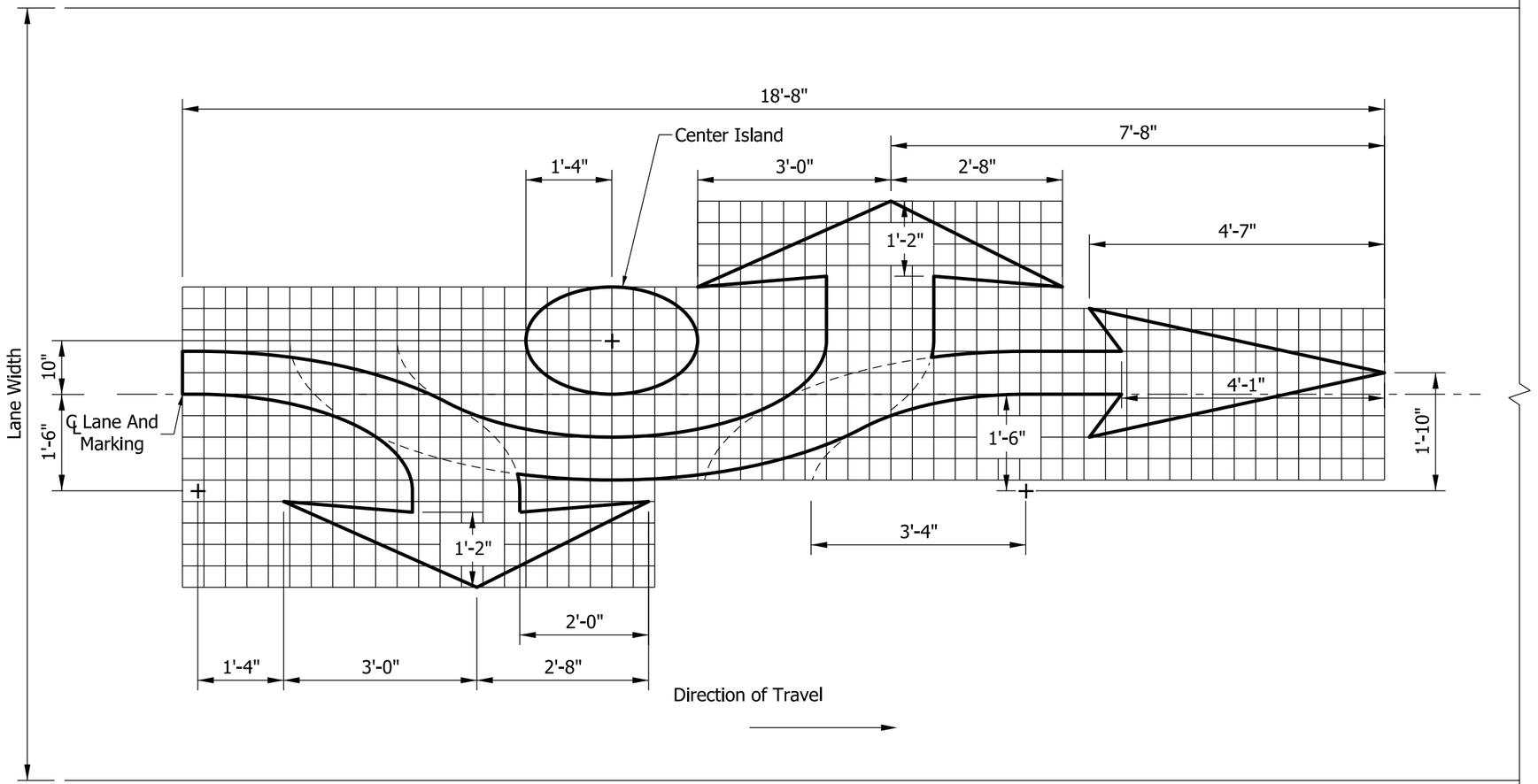

DETAIL

NOTES:

1. Each roundabout traffic arrow pavement marking shall be centered in the travel lane.
2. The grid lines are 4 in. apart.

ROUNDABOUT TRAFFIC ARROWS WITH QUANTITIES

THRU ONLY (2.1 SYS) | LEFT / THRU (2.7 SYS) | RIGHT / THRU (2.6 SYS) | RIGHT / LEFT / THRU (3.2 SYS) | LEFT ONLY (2.0 SYS)

With Center Island

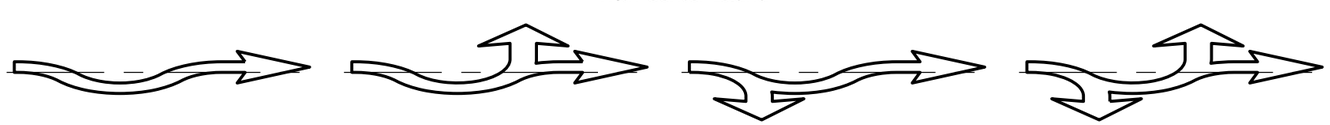

THRU ONLY (1.7 SYS) | LEFT / THRU (2.3 SYS) | RIGHT / THRU (2.2 SYS) | RIGHT / LEFT / THRU (2.8 SYS)

Without Center Island

INDIANA DEPARTMENT OF TRANSPORTATION

PAVEMENT MARKINGS
ROUNDABOUT TRAFFIC ARROWS

SEPTEMBER 2015

STANDARD DRAWING NO. E 808-MKPM-01

DAVID H. BORUFF REGISTERED No. 60900348 STATE OF INDIANA PROFESSIONAL ENGINEER

/s/ David H. Boruff 03/04/15
DESIGN STANDARDS ENGINEER DATE

/s/ Mark A. Miller 03/06/15
CHIEF ENGINEER DATE

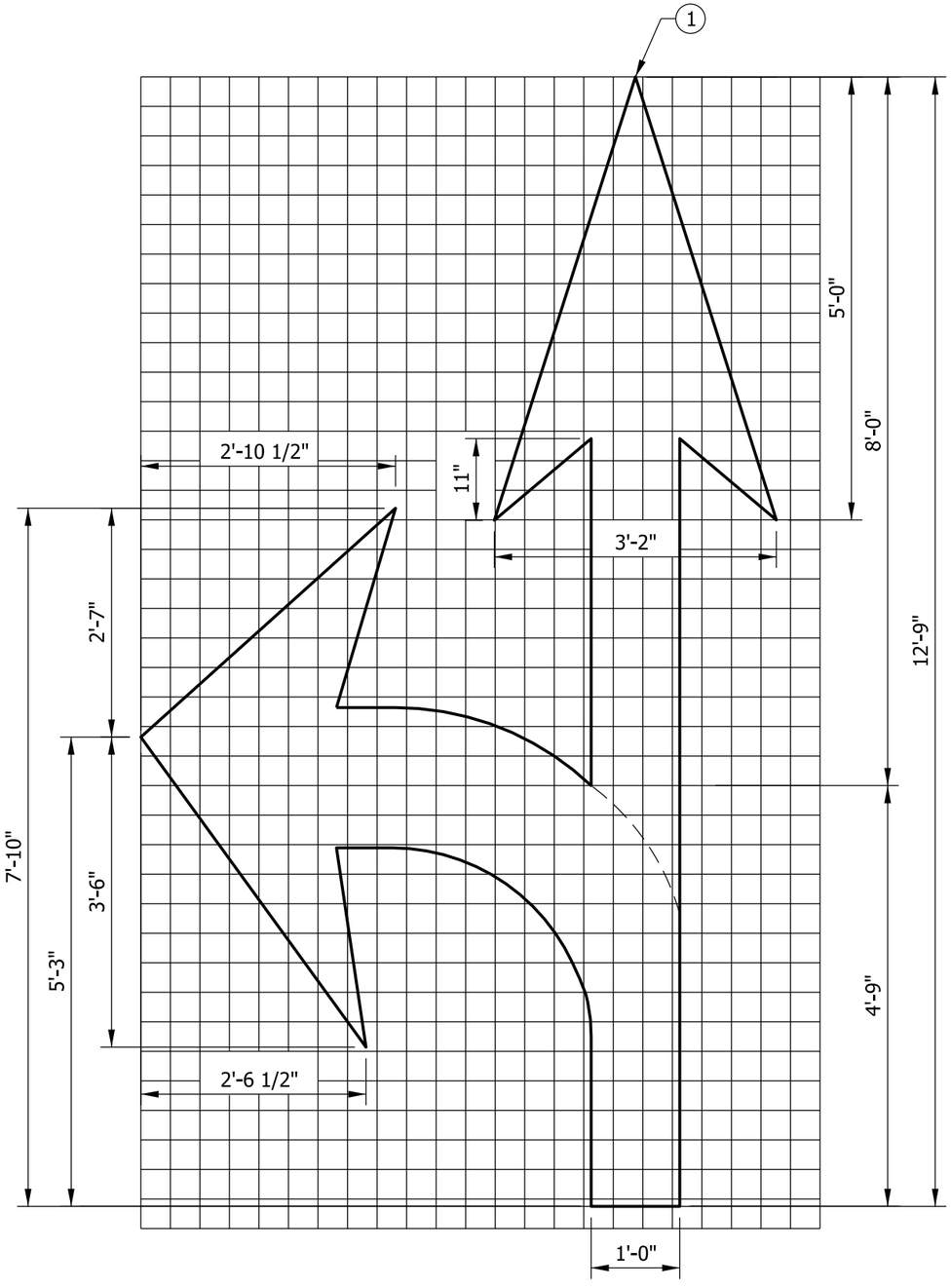

LEFT/THRU ARROW (3)

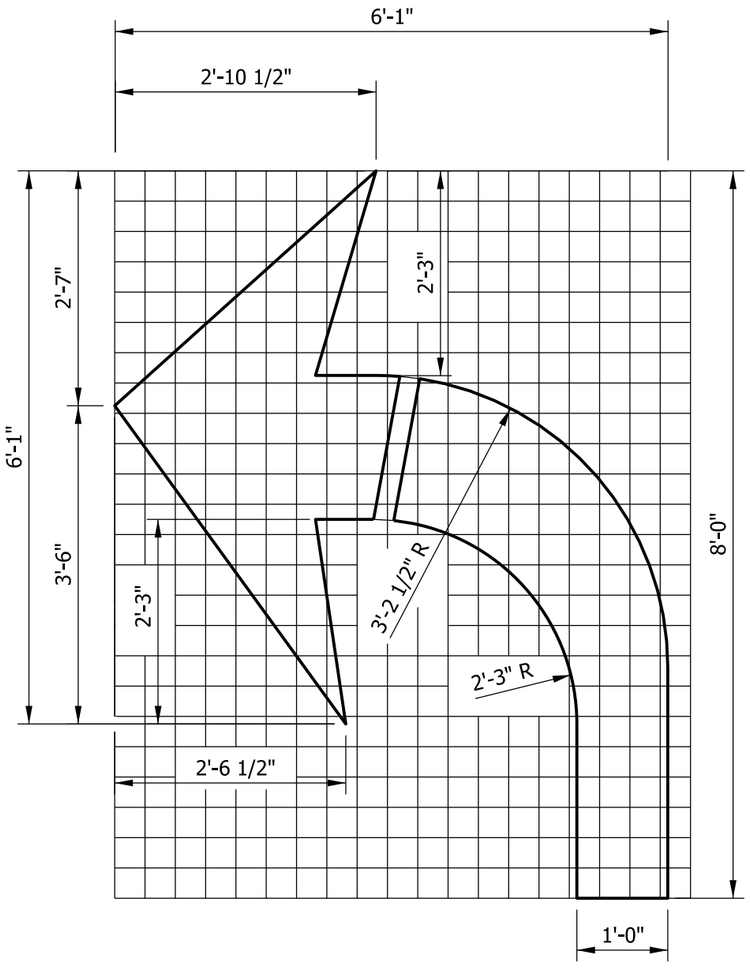

LEFT ONLY ARROW (3)

NOTES:

(1) The tip of the lane indication arrow closest to the stop line shall be 20 ft in advance of the nearest edge of the stop line.

2. The grid lines are 4 in. apart.

(3) Reverse the dimensions of the left arrow for a right/thru or right only arrow.

INDIANA DEPARTMENT OF TRANSPORTATION

TRANSVERSE MARKINGS
TURN ARROWS

SEPTEMBER 2015

STANDARD DRAWING NO. E 808-MKPM-02

DAVID H. BORUFF
REGISTERED
No. 60900348
STATE OF INDIANA
PROFESSIONAL ENGINEER

/s/ David H. Boruff 03/04/15
DESIGN STANDARDS ENGINEER DATE

/s/ Mark A. Miller 03/06/15
CHIEF ENGINEER DATE

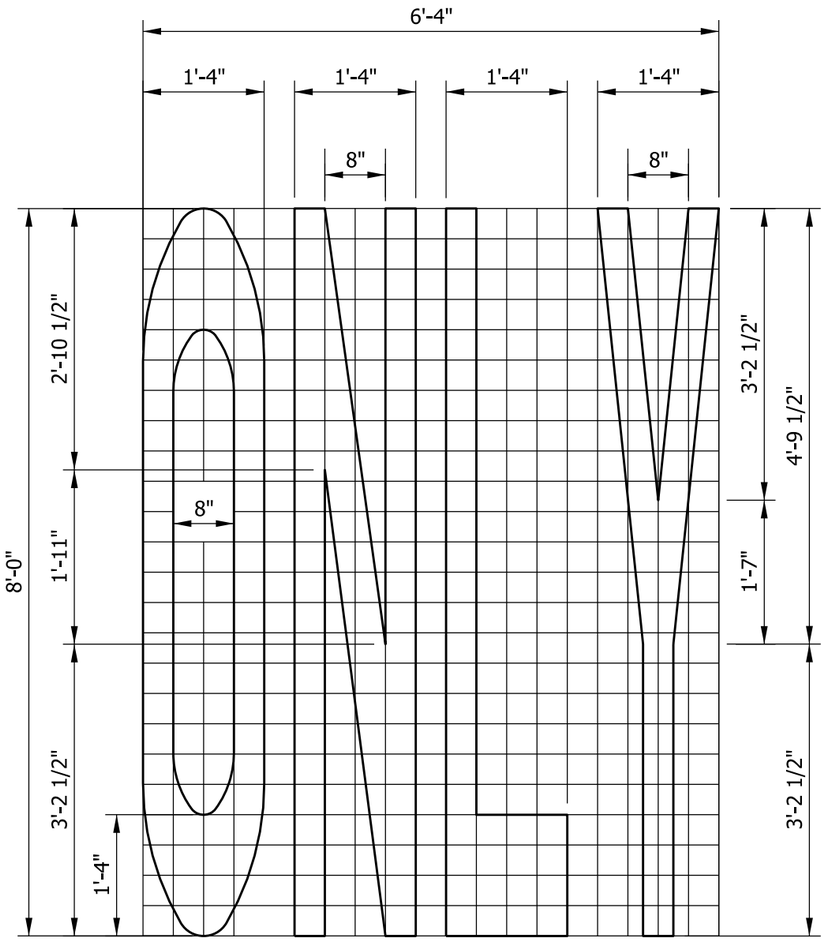

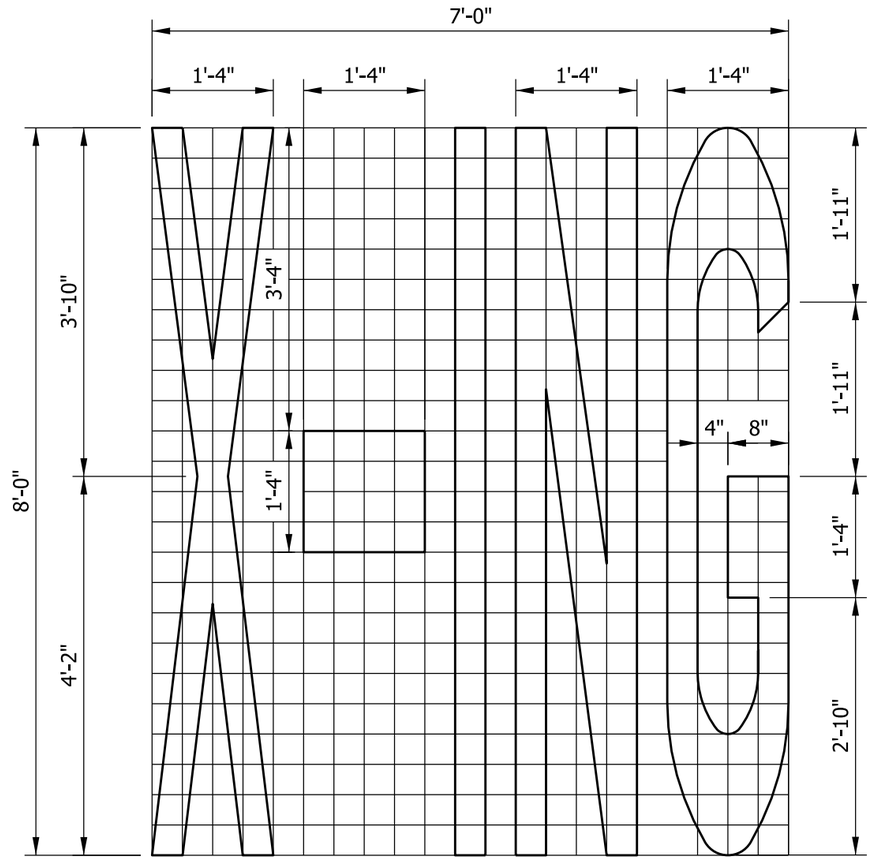

NOTES:

1. The top part of the word ONLY shall be placed prior to the lane indication arrow, 32 ft for posted speeds ≤ 45 mph but not more than 80 ft for posted speeds > 45 mph.
2. Each letter is 1'-4" wide. Vertical line segments within each letter are 4" wide. Spaces between vertical line segments are 4".
3. The grid lines are 4 in. apart.

INDIANA DEPARTMENT OF TRANSPORTATION

TRANSVERSE MARKINGS
WORD MESSAGES
"ONLY" AND "X-ING"

SEPTEMBER 2015

STANDARD DRAWING NO. E 808-MKPM-03

DAVID H. BORUFF
REGISTERED
No. 60900348
STATE OF INDIANA
PROFESSIONAL ENGINEER

/s/ David H. Boruff 03/04/15
DESIGN STANDARDS ENGINEER DATE

/s/ Mark A. Miller 03/06/15
CHIEF ENGINEER DATE

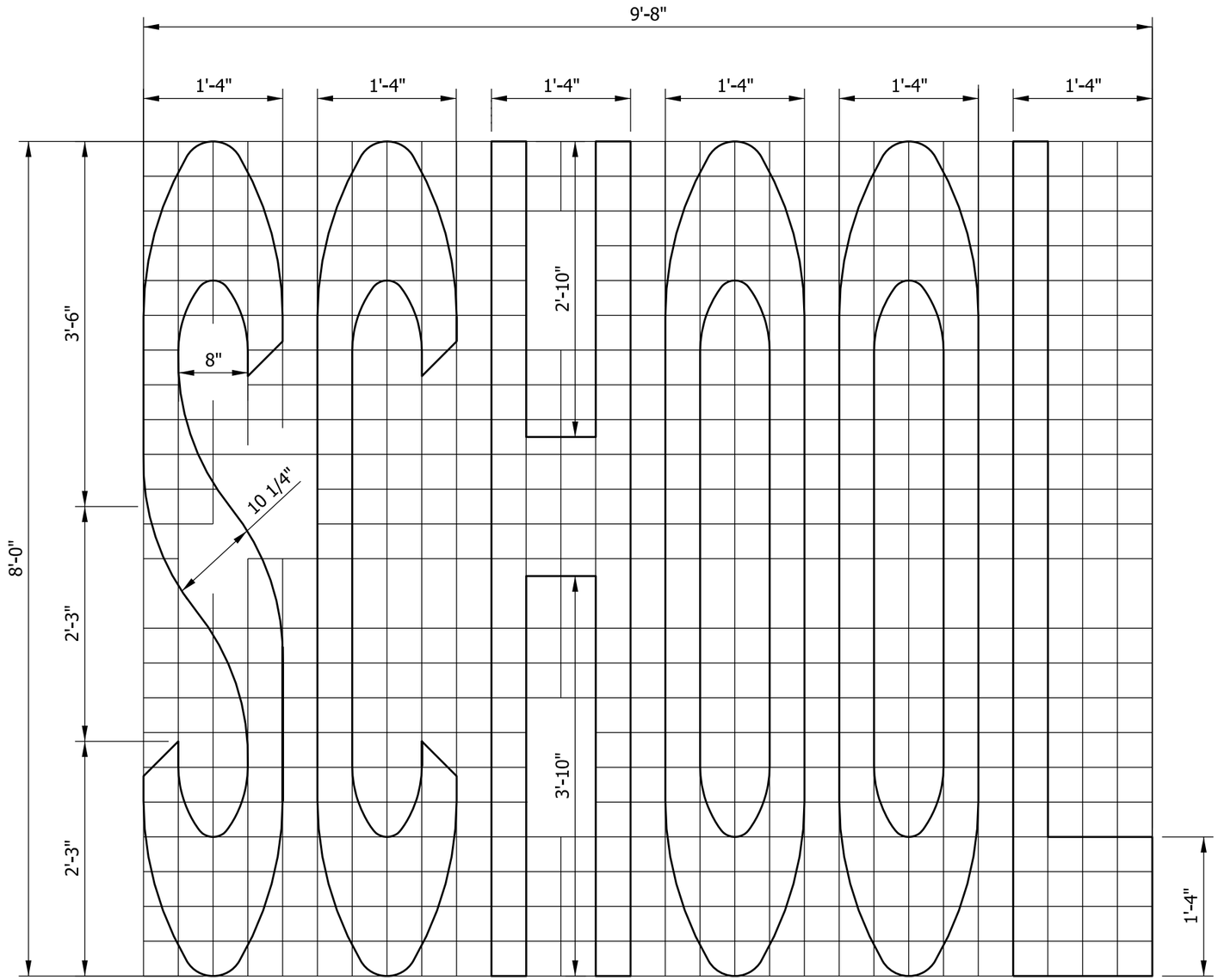

NOTES:

1. Each letter is 1'-4" wide. Vertical line segments within each letter are 4" wide. Spaces between vertical lines are 4".

2. Grid lines are 4 in. apart.

INDIANA DEPARTMENT OF TRANSPORTATION

TRANSVERSE MARKINGS
WORD MESSAGE
"SCHOOL"

SEPTEMBER 2015

STANDARD DRAWING NO. E 808-MKPM-04

DAVID H. BORUFF
REGISTERED
No. 60900348
STATE OF INDIANA
PROFESSIONAL ENGINEER

/s/ David H. Boruff 03/04/15
DESIGN STANDARDS ENGINEER DATE

/s/ Mark A. Miller 03/06/15
CHIEF ENGINEER DATE

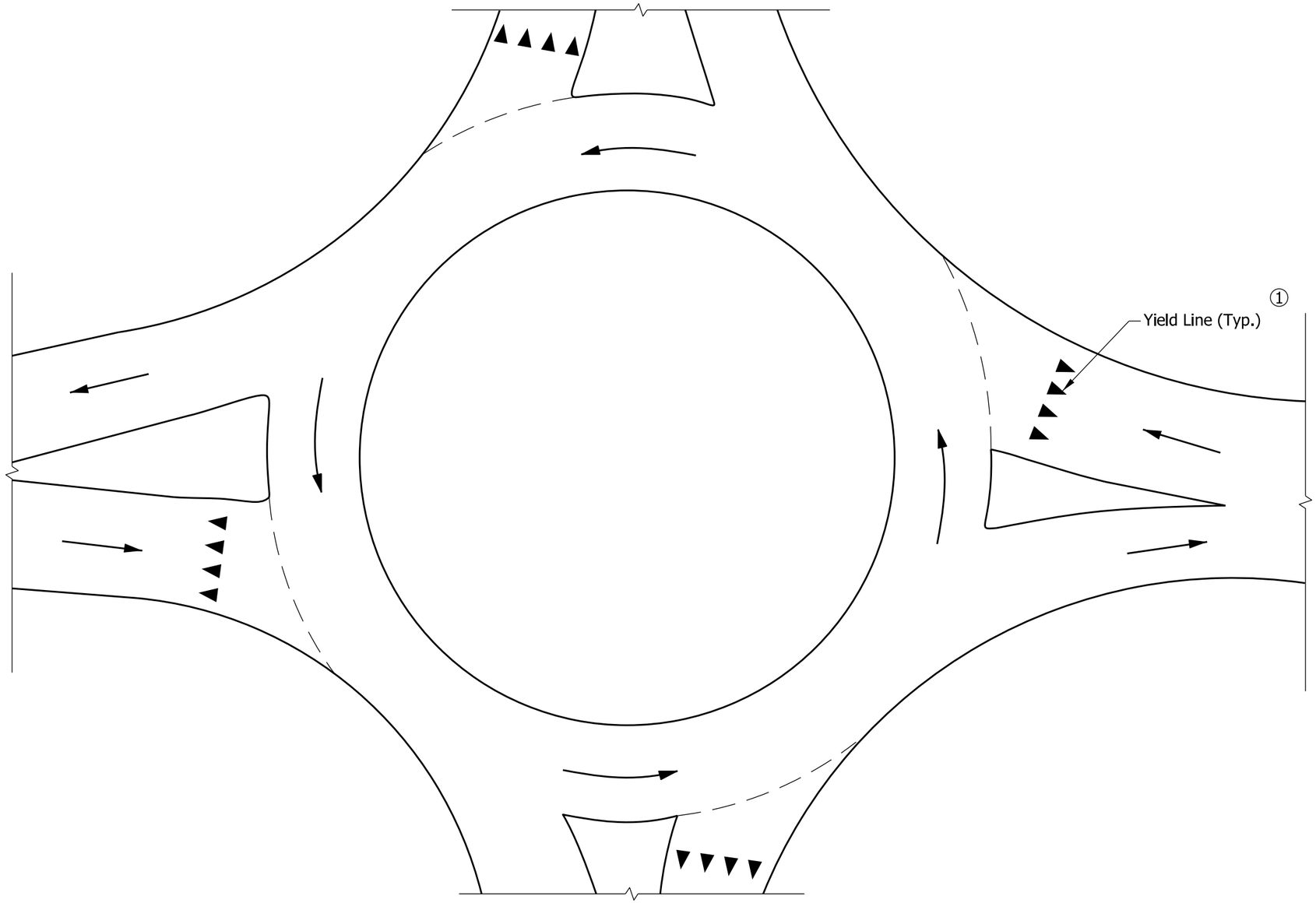

YIELD LINE PLACEMENT

NOTES:

① Yield line width and placement shall be as shown on the plans.

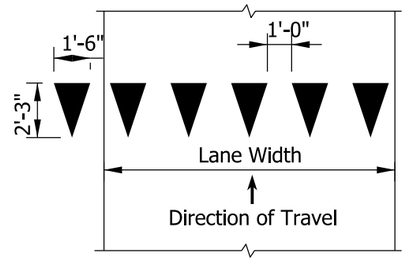

27 INCH WIDE YIELD LINES

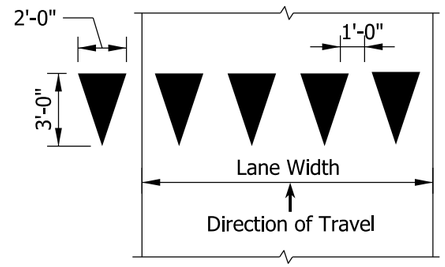

36 INCH WIDE YIELD LINES

INDIANA DEPARTMENT OF TRANSPORTATION

TRANSVERSE MARKINGS
YIELD LINES

SEPTEMBER 2015

STANDARD DRAWING NO. E 808-MKPM-05

DAVID H. BORUFF
REGISTERED
No. 60900348
STATE OF INDIANA
PROFESSIONAL ENGINEER

/s/ David H. Boruff 03/04/15
DESIGN STANDARDS ENGINEER DATE

/s/ Mark A. Miller 03/06/15
CHIEF ENGINEER DATE

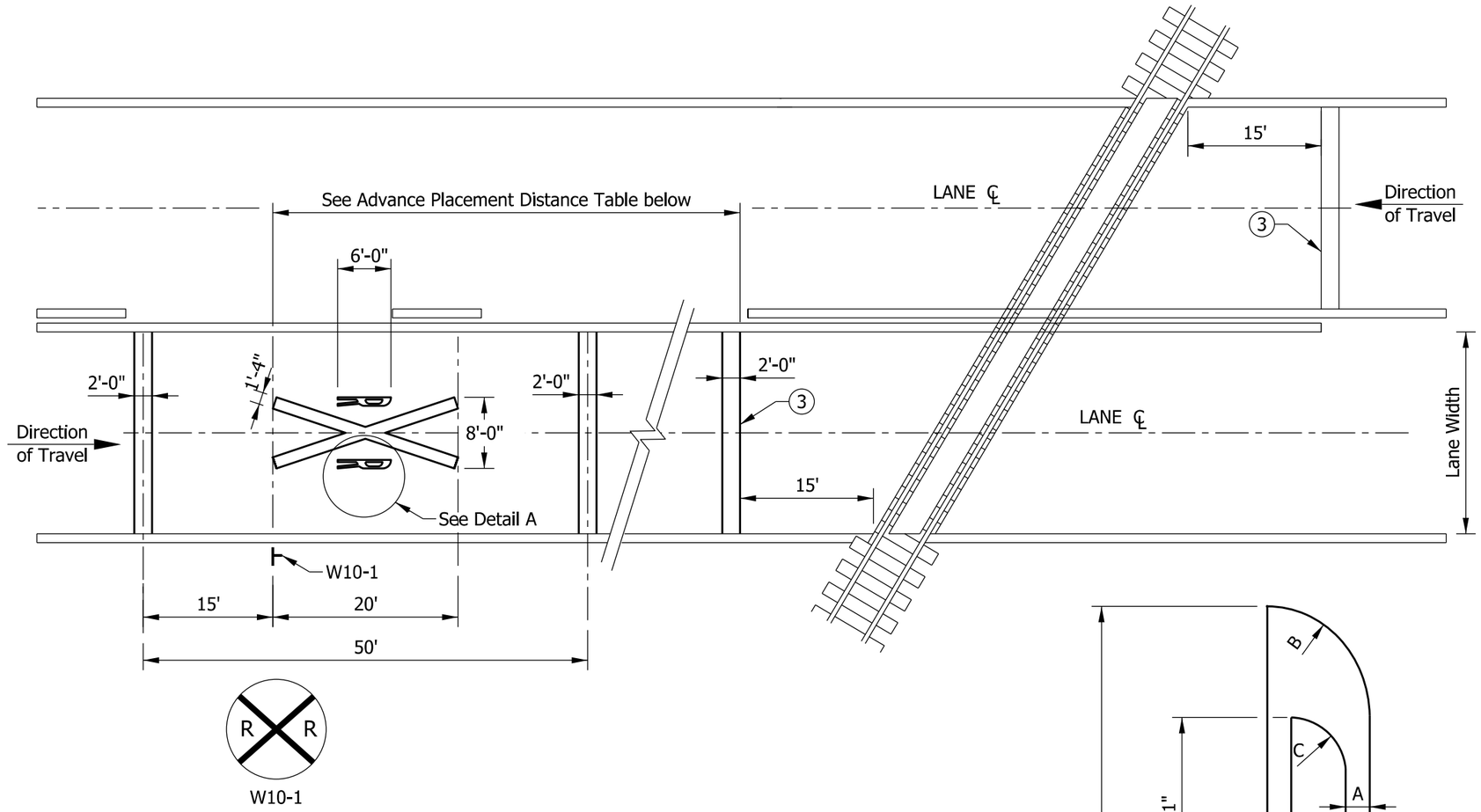

W10-1

ADVANCE PLACEMENT DISTANCE TABLE

DESIGN SPEED (MPH)	DISTANCE (FT)
20	115
25	155
30	200
35	250
40	305
45	360
50	425
55	495
60	570

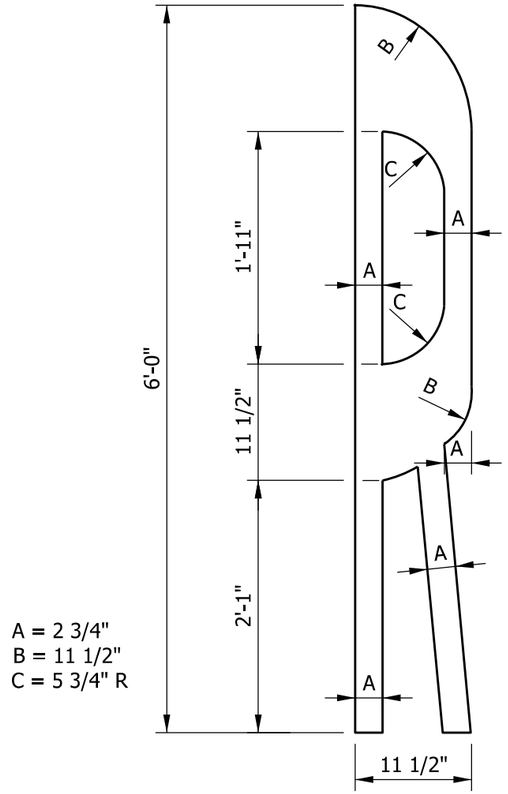

A = 2 3/4"
B = 11 1/2"
C = 5 3/4" R

DETAIL A

NOTES:

1. For two-way left-turn lanes, the center lane shall be discontinued across the railroad crossing and marked as a flush median or as a one-way left-turn lane.
2. For a multi-lane highway, the tranverse lines shall be extended across all approach lanes, and the individual railroad crossing symbols provided in each lane.

(3) Stop line shall be placed 8 ft in advance of the crossing gate (if present), but no closer than 15 ft in advance of the nearest rail.

INDIANA DEPARTMENT OF TRANSPORTATION

TRANSVERSE MARKINGS
RAILROAD CROSSINGS

SEPTEMBER 2026

STANDARD DRAWING NO. E 808-MKPM-06

DAVID H. BORUFF REGISTERED No. 60900348 STATE OF INDIANA PROFESSIONAL ENGINEER

David H Boruff 4/28/2026
DESIGN STANDARDS ENGINEER DATE

04/29/2026
CHIEF ENGINEER DATE

INDEX	
SHEET NO.	SUBJECT
1	Raised Pavement Markers, Index and General Notes
2	Raised Pavement Markers at Freeway Exit Ramps
3	Raised Pavement Markers at Freeway Entrance Ramps
4	Raised Pavement Markers at Cloverleaf Loop Ramps
5	Placement of Raised Pavement Markers on Non-Freeways

GENERAL NOTES:

1. Raised pavement markers shall be selected from the Department's QPL of Snowplowable Raised Pavement Markers (RPM's).

2. On PCCP, the near edge of a RPM shall be at least 2 in. from a longitudinal joint and 6 in. from a transverse joint.

INDIANA DEPARTMENT OF TRANSPORTATION

RAISED PAVEMENT MARKERS,
INDEX AND GENERAL NOTES

SEPTEMBER 2023

STANDARD DRAWING NO. E 808-MKRM-01

DAVID H. BORUFF
REGISTERED
No.
60900348
STATE OF
INDIANA
PROFESSIONAL ENGINEER

David H Boruff 05/04/23
DESIGN STANDARDS ENGINEER DATE

05/08/2023
CHIEF ENGINEER DATE

NOTES:

1. See Standard Drawing E 808-DLIM series for chevron marking details.
2. Two-way Yellow/Red RPM's shall be spaced 40 ft from the end of the exit gore to the ramp midpoint.

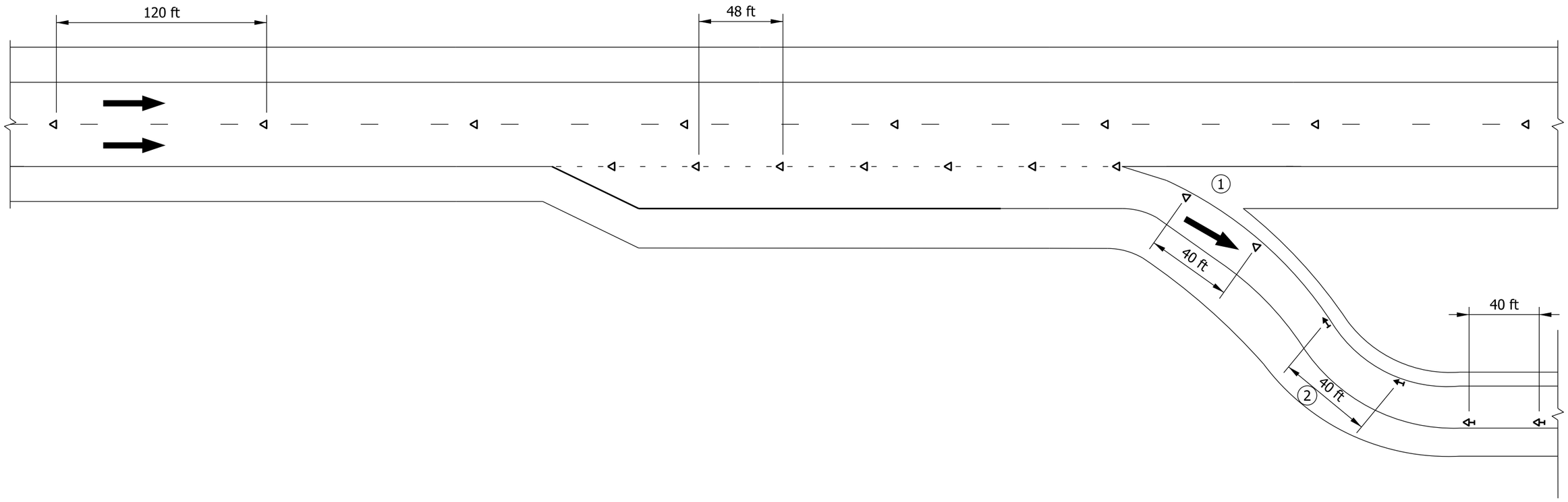

LEGEND

- One-way White RPM
- Two-way White/Red RPM
- Two-way Yellow/Red RPM
- Direction of Traffic

INDIANA DEPARTMENT OF TRANSPORTATION

RAISED PAVEMENT MARKERS AT
FREEWAY EXIT RAMPS

SEPTEMBER 2023

STANDARD DRAWING NO. E 808-MKRM-02

DAVID H. BORUFF
REGISTERED
No. 60900348
STATE OF INDIANA
PROFESSIONAL ENGINEER

05/04/23
DESIGN STANDARDS ENGINEER DATE

05/08/2023
CHIEF ENGINEER DATE

NOTE:

(1) See Standard Drawing E 808-DLIM series for chevron marking details.

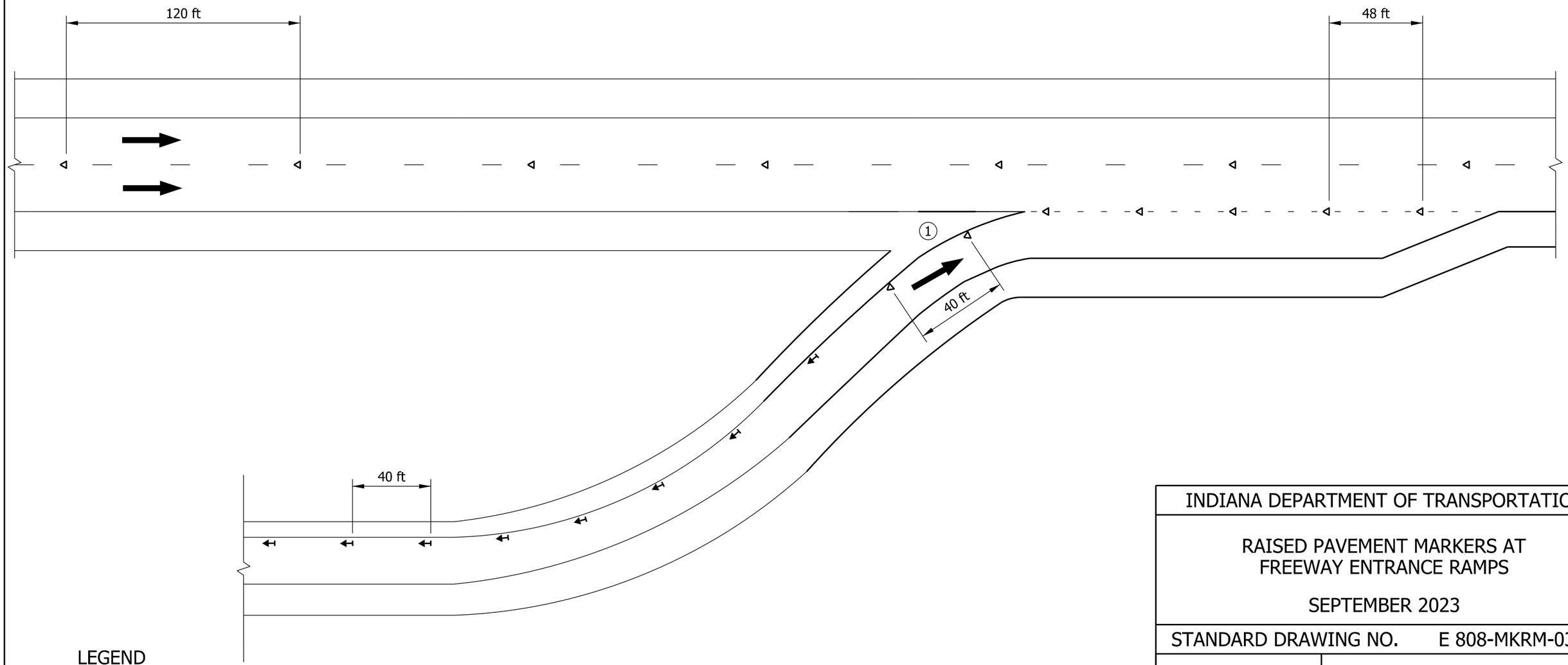

LEGEND

- One-way White RPM
- Two-way White/Red RPM
- Two-way Yellow/Red RPM
- Direction of Traffic

INDIANA DEPARTMENT OF TRANSPORTATION

RAISED PAVEMENT MARKERS AT FREEWAY ENTRANCE RAMPS

SEPTEMBER 2023

STANDARD DRAWING NO. E 808-MKRM-03

DAVID H. BORUFF REGISTERED No. 60900348 STATE OF INDIANA PROFESSIONAL ENGINEER

David H Boruff 05/04/23

DESIGN STANDARDS ENGINEER DATE

05/08/2023

CHIEF ENGINEER DATE

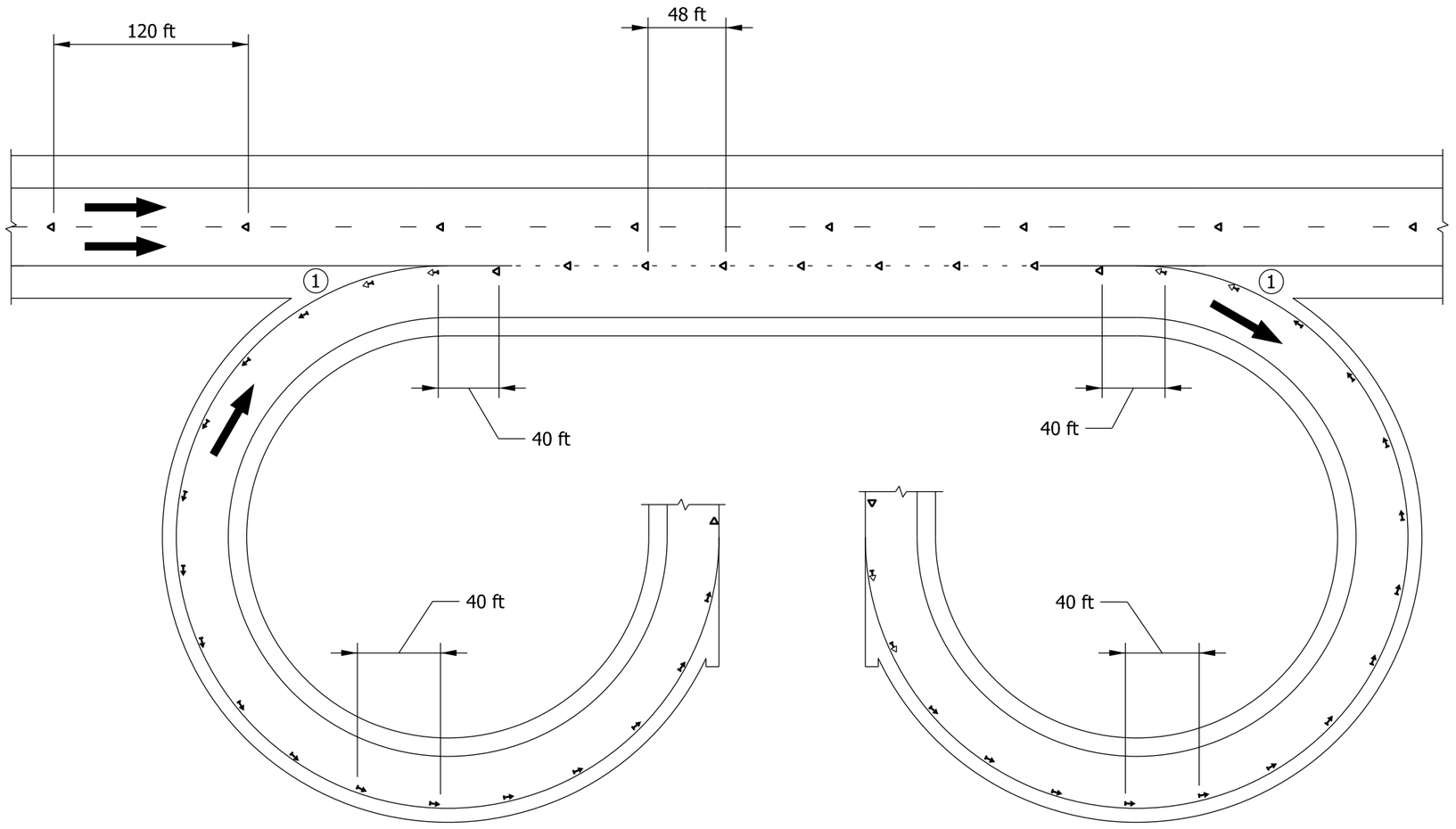

NOTE:

(1) See Standard Drawing E 808-DLIM series for chevron marking details.

LEGEND

- One-way White RPM
- Two-way White/Red RPM
- Two-way Yellow/Red RPM
- Direction of Traffic

INDIANA DEPARTMENT OF TRANSPORTATION

RAISED PAVEMENT MARKERS
AT CLOVERLEAF LOOP RAMPS

SEPTEMBER 2023

STANDARD DRAWING NO. E 808-MKRM-04

DAVID H. BORUFF
REGISTERED
No. 60900348
STATE OF INDIANA
PROFESSIONAL ENGINEER

David H Boruff 05/04/23
DESIGN STANDARDS ENGINEER DATE

05/08/2023
CHIEF ENGINEER DATE

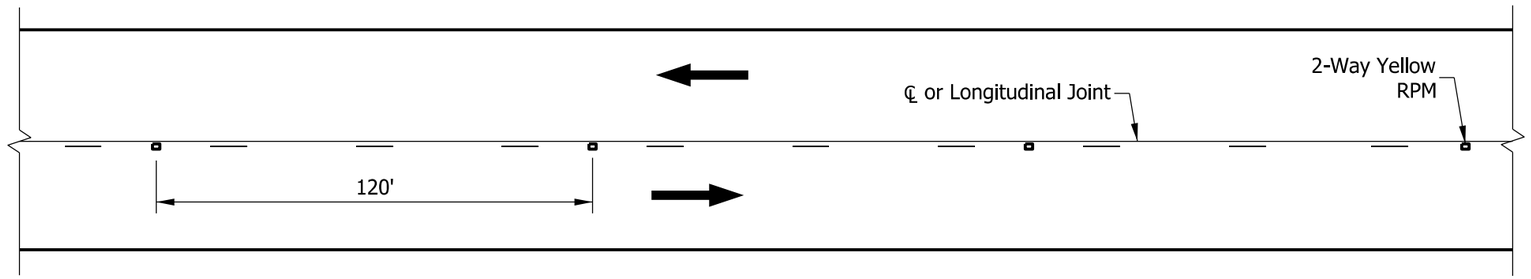

TWO LANE ROADWAY
PASS WITH CARE SECTION

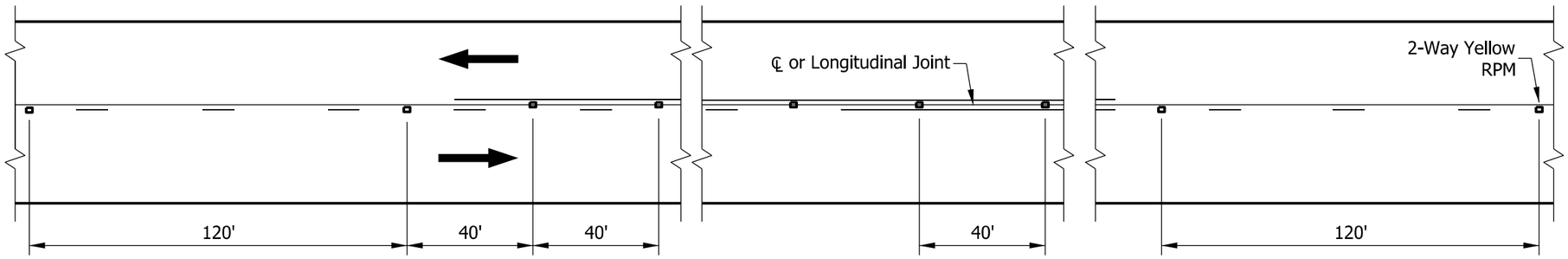

TWO LANE ROADWAY
NO PASSING ZONE

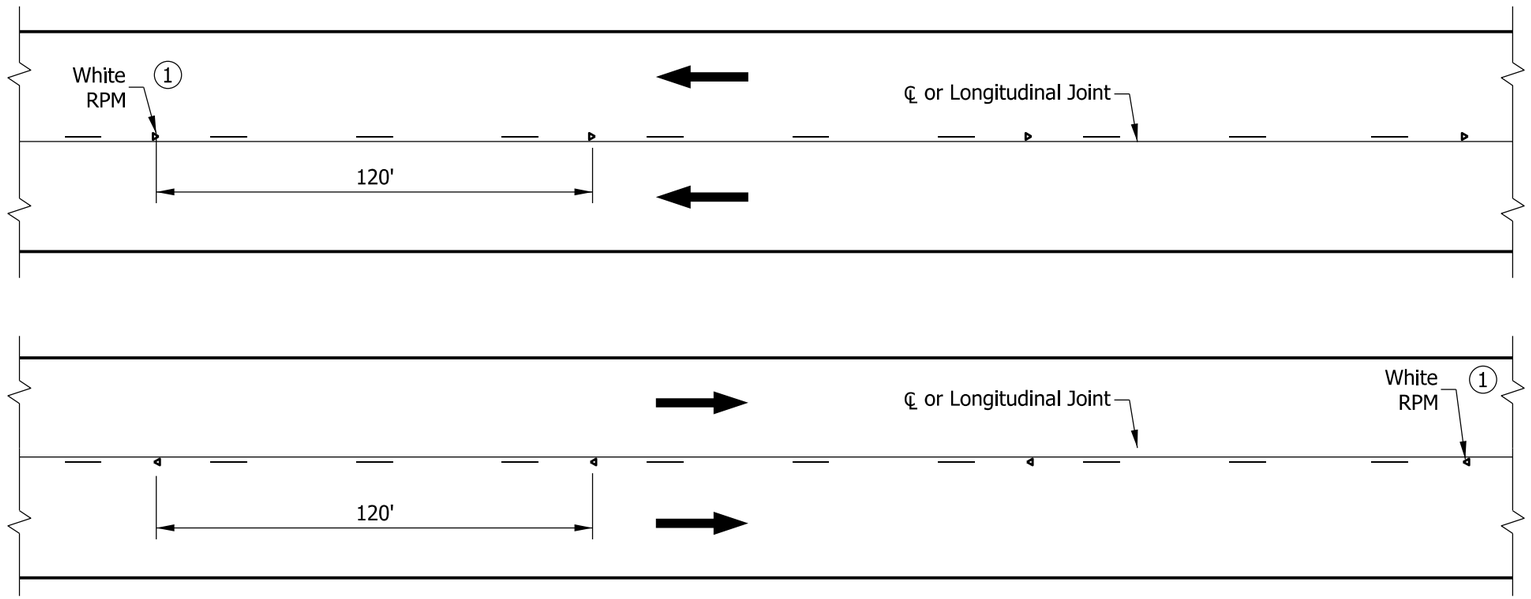

MULTI-LANE ROADWAY

NOTES:

1. Two-way white/red RPM's shall be used within 200 ft of all public road intersections.
2. For two lane roadways with PCCP, the no passing zones shall be treated as a restricted RPM area in accordance with 808.11(b).

LEGEND

- One-way White RPM
- Two-way Yellow RPM
- Direction of Traffic

INDIANA DEPARTMENT OF TRANSPORTATION

PLACEMENT OF SNOWPLOWABLE RAISED PAVEMENT MARKERS ON NON-FREEWAYS

SEPTEMBER 2023

STANDARD DRAWING NO. E 808-MKRM-05

DAVID H. BORUFF
REGISTERED
No. 60900348
STATE OF INDIANA
PROFESSIONAL ENGINEER

David H Boruff 05/04/23
DESIGN STANDARDS ENGINEER DATE

05/08/2023
CHIEF ENGINEER DATE

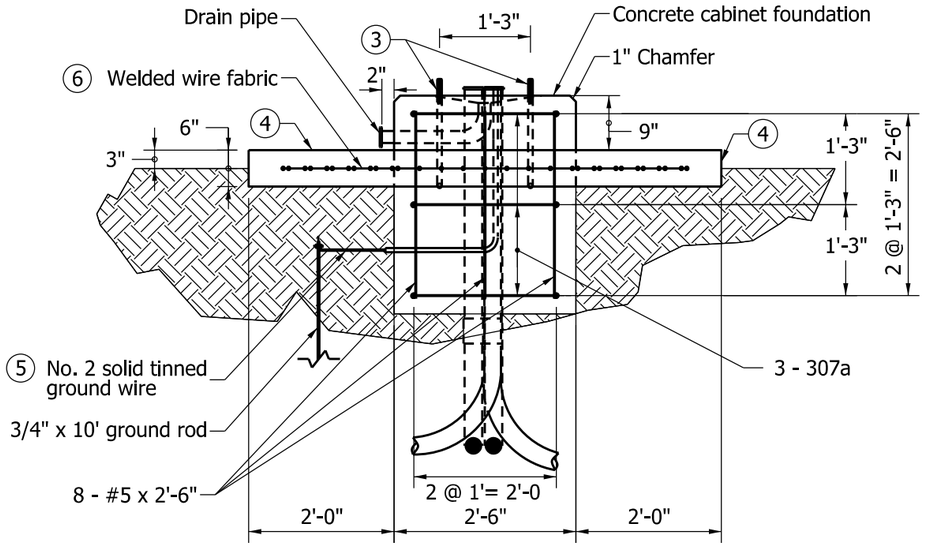

SECTION A-A

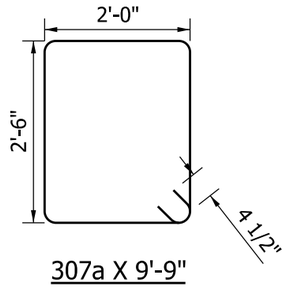

307a X 9'-9"

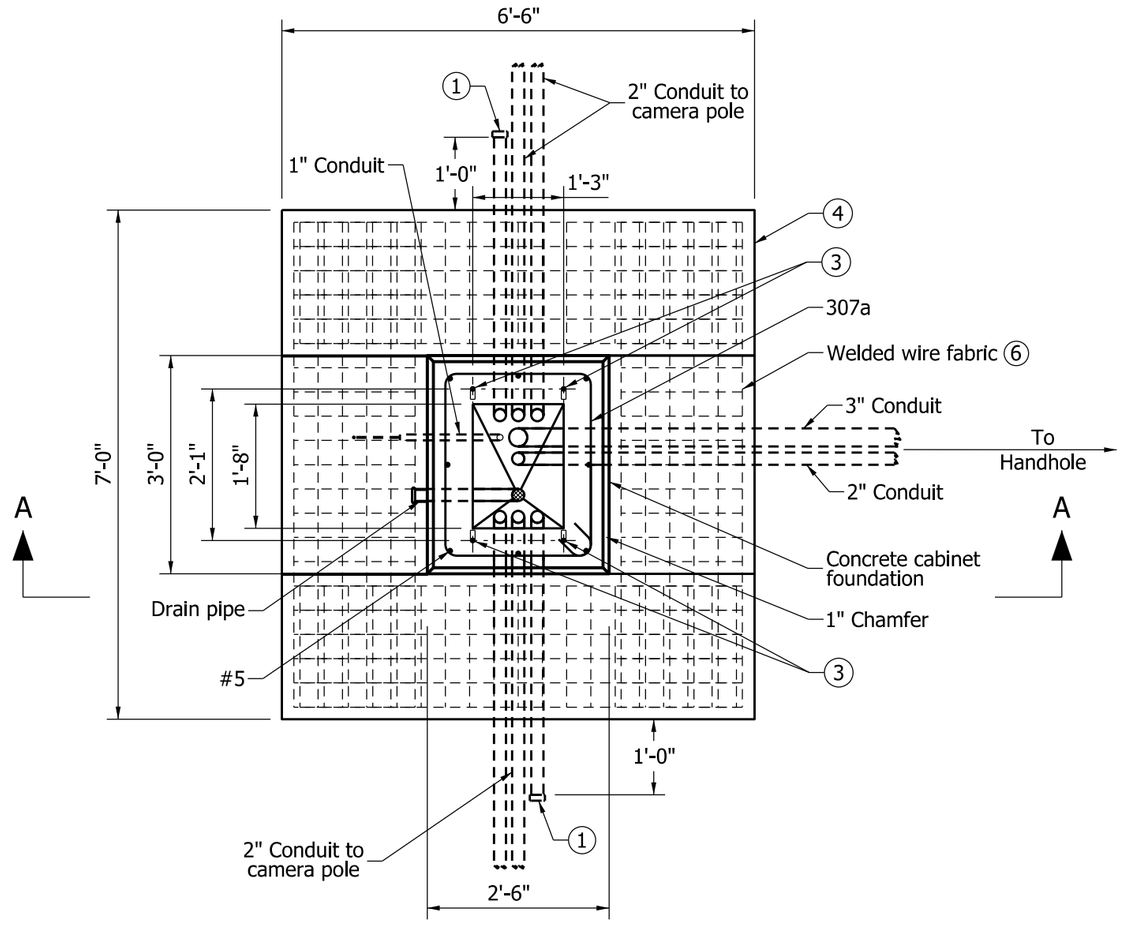

PLAN VIEW

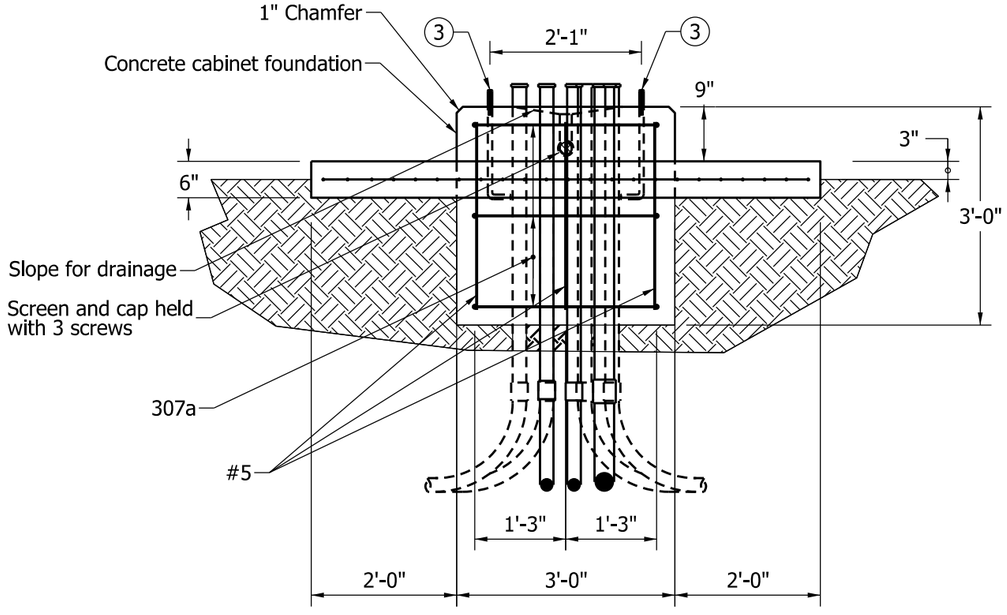

SIDE VIEW

NOTES:

1. 2" conduit capped off for future use.
2. Direction and actual location of conduit may vary due to service point and camera pole placement.
3. 3/4" x 18" anchor bolt as shown on Standard Drawing E 805 SGPB-01.
4. Concrete footpad shall be sloped to drain outward.
5. Bind ground rod to foundation using No. 2 solid tinned ground wire.
6. Welded wire fabric shall be 6 x 6 W6 x W6.

INDIANA DEPARTMENT OF TRANSPORTATION

ITS CONTROLLER CABINET FOUNDATION VIRTUAL WEIGH-IN-MOTION (VWIM)

SEPTEMBER 2012

STANDARD DRAWING NO. E 809-ICCF-01

RICHARD L. VanCLEAVE REGISTERED No. 9750 STATE OF INDIANA PROFESSIONAL ENGINEER

/s/ Richard L. Van Cleave 09/04/12
SUPERVISOR, ROADWAY STANDARDS DATE

/s/ Mark A. Miller 09/04/12
CHIEF ENGINEER DATE

INDEX	
SHEET NO.	SUBJECT
1	ITS Traffic Count Stations Index and General Notes
2	Two Lane Automatic Traffic Recorder (ATR) Stations
3	Four Lane Automatic Traffic Recorder (ATR) Stations
4	Six Lane Automatic Traffic Recorder (ATR) Stations
5	Four Lane Weigh-in-Motion (WIM) Stations
6	Six Lane Weigh-in-Motion (WIM) Stations
7	Four Lane Virtual Weigh-in-Motion (VWIM) Stations
8	Six Lane Virtual Weigh-in-Motion (VWIM) Stations

GENERAL NOTES:

1. Road surface pavement condition shall meet ASTM E 1318 requirements.
2. Pavement shall be free of bumps or transitions for at least 200 ft before and at least 100 ft after the automated traffic count station
3. Pavement on either side of any sensor shall be free of joints and cracks for at least 2 ft.
4. The Contractor shall contact the ITS Engineering Division for approval before installing at any location where the conditions in notes 1, 2, or 3 above are not met.
5. If the median is paved and has a concrete crash barrier, each inside shoulder shall have one communications handhole and one power handhole.
6. All conduits shall include one tracer wire #14 gauge or larger.
7. Conduits shall be schedule 80 PVC unless otherwise specified and under-bored when crossing the roadway.
8. Electric power wires shall have dedicated separate conduits and shall not run in conduits with sensor or communication wires.
9. See Standard Drawing E 809-ICCF series for additional cabinet details.
10. Cables shall be protected by PVC sleeves where they cross pavement joints or cracks.
11. Direct 120/240VAC, 60Hz power shall be delivered to the following components: ATR Cabinet
12. Wire splices shall not be used with electric power wires nor with piezoelectric, temperature, or axle weight sensor wires.
13. Inductive loop wires shall be spliced to the lead-in wires and sealed for waterproofing in the detector housing.
14. Cables crossing the pavement or shoulder transition shall cross perpendicular to the joint and continue for at least 6 ft before making a turn.

INDIANA DEPARTMENT OF TRANSPORTATION

ITS TRAFFIC COUNT STATIONS INDEX AND GENERAL NOTES

SEPTEMBER 2023

STANDARD DRAWING NO. E 809-ITCS-01

DAVID H. BORUFF REGISTERED No. 60900348 STATE OF INDIANA PROFESSIONAL ENGINEER

David H Boruff 05/04/23
DESIGN STANDARDS ENGINEER DATE

05/12/2023
CHIEF ENGINEER DATE

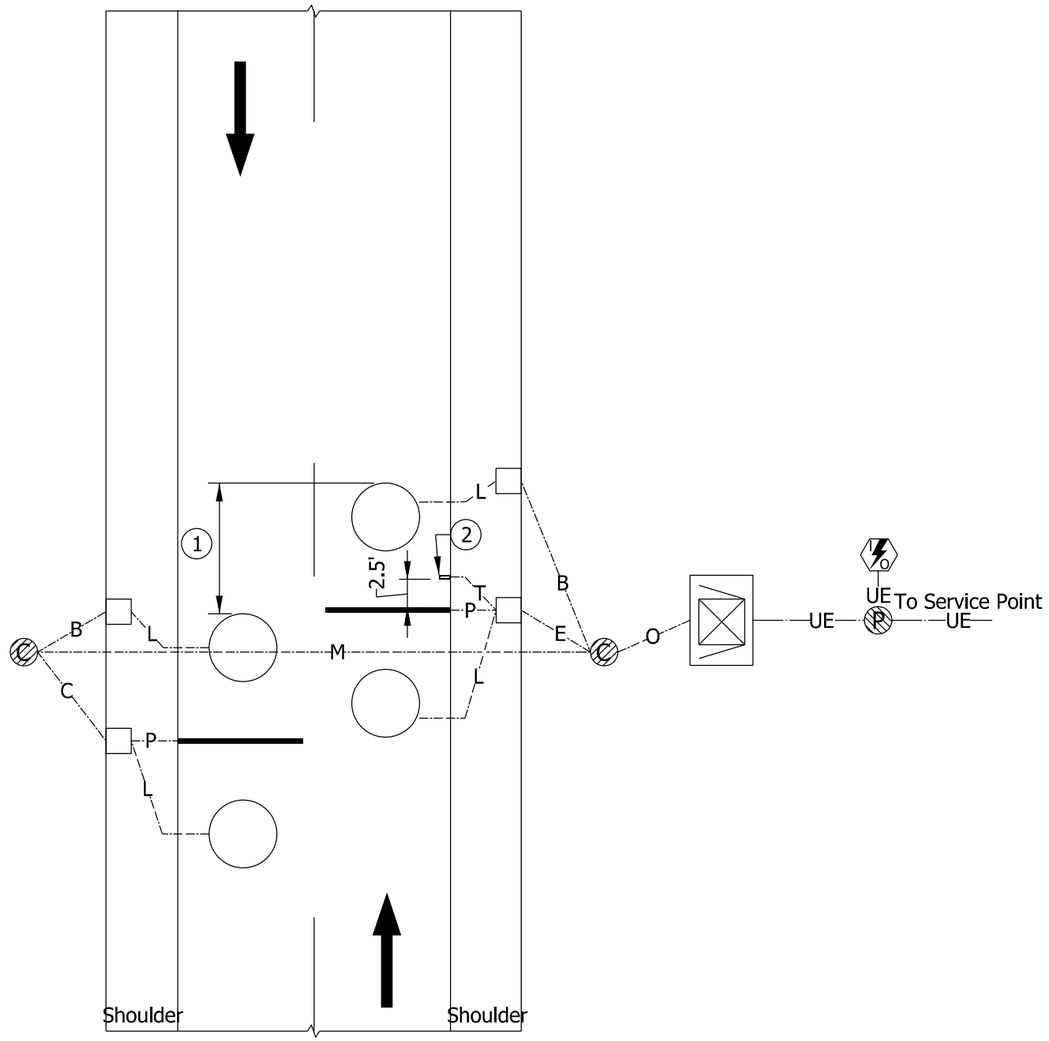

NOTES:

1. The offset of piezo sensors from one lane to the next shall be 11.5 ft or as directed by the Engineer.
2. Temperature sensor

CONDUIT KEY:

- – — –B– — – 2 in. Conduit with 1 Loop Lead
- – — –C– — – 2 in. Conduit with 1 Loop Lead and 1 Piezo Lead
- – — –E– — – 2 in. Conduit with 1 Loop Lead, 1 Piezo Lead, and 1 Temperature Lead
- – — –L– — – Loop Lead
- – — –M– — – 3 in. Conduit with 2 Loop Leads, 1 Piezo Lead, and 1 Pull Line
- – — –O– — – 3 in. Conduit with 4 Loop Leads, 2 Piezo Leads, 1 Temperature Lead, and 1 Pull Line
- – — –P– — – Piezoelectric Sensor Lead
- – — –T– — – Temperature Sensor Lead
- – — –UE– — – Electric Conduit 120 / 240 VAC

LEGEND

- Temperature Sensor
- Detector Housing
- Class-1 Piezoelectric Sensor (11' in Length)
- Round Inductive Loop (6' Diameter)
- Communications Handhole
- Power Handhole (120/240VAC)
- Cabinet and Concrete Base
- Direction of Traffic Arrow
- Remote Disconnect

INDIANA DEPARTMENT OF TRANSPORTATION

TWO LANE AUTOMATIC TRAFFIC RECORDER (ATR) STATIONS

SEPTEMBER 2023

STANDARD DRAWING NO. E 809-ITCS-02

DAVID H. BORUFF REGISTERED No. 60900348 STATE OF INDIANA PROFESSIONAL ENGINEER

David H. Boruff 05/04/23
DESIGN STANDARDS ENGINEER DATE

05/12/2023
CHIEF ENGINEER DATE

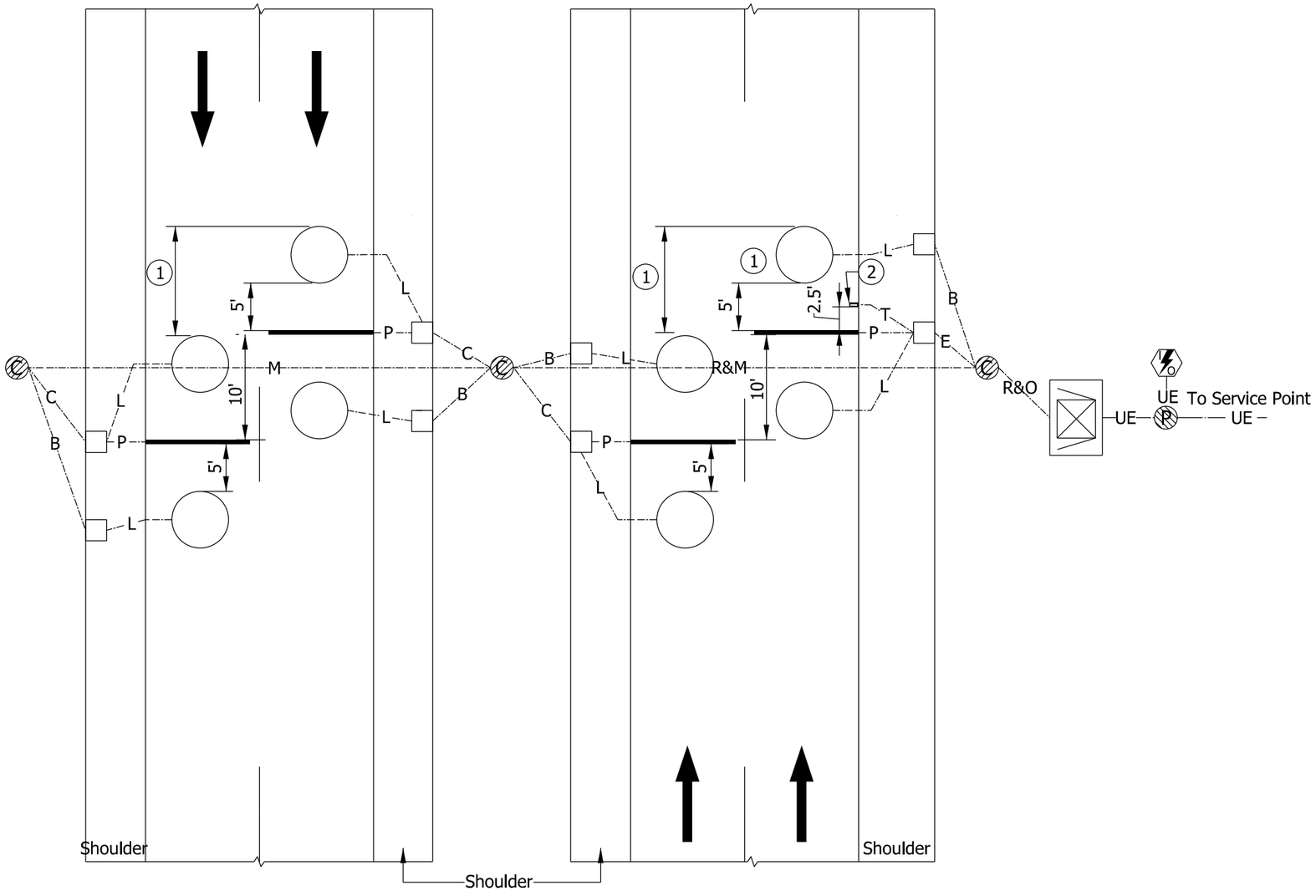

NOTES:

1. The offset of piezo sensors from one lane to the next shall be 11.5 ft or as directed by the Engineer.
2. Temperature sensor

CONDUIT KEY:

– — –B– — –	2 in. Conduit with 1 Loop Lead
– — –C– — –	2 in. Conduit with 1 Loop Lead and 1 Piezo Lead
– — –E– — –	2 in. Conduit with 1 Loop Lead, 1 Piezo Lead, and 1 Temperature Lead
– — –L– — –	Loop Lead
– — –M– — –	3 in. Conduit with 2 Loop Leads, 1 Piezo Lead, and 1 Pull Line
– — –O– — –	3 in. Conduit with 4 Loop Leads, 2 Piezo Leads, 1 Temperature Lead, and 1 Pull Line
– — –P– — –	Piezoelectric Sensor Lead
– — –R– — –	3 in. Conduit with 4 Loop Leads, 2 Piezo Leads, and 1 Pull Line
– — –T– — –	Temperature Sensor Lead
– — –UE– — –	Electric Conduit 120 / 240 VAC

LEGEND

- Temperature Sensor
- Detector Housing
- Class-1 Piezoelectric Sensor (11' in Length)
- Round Inductive Loop (6' Diameter)
- Communications Handhole
- Power Handhole (120/240VAC)
- Cabinet and Concrete Base
- Direction of Traffic Arrow
- Remote Disconnect

INDIANA DEPARTMENT OF TRANSPORTATION

FOUR LANE AUTOMATIC TRAFFIC RECORDER (ATR) STATIONS

SEPTEMBER 2023

STANDARD DRAWING NO. E 809-ITCS-03

DAVID H. BORUFF REGISTERED No. 60900348 STATE OF INDIANA PROFESSIONAL ENGINEER

David H Boruff 05/04/23
DESIGN STANDARDS ENGINEER DATE

05/12/2023
CHIEF ENGINEER DATE

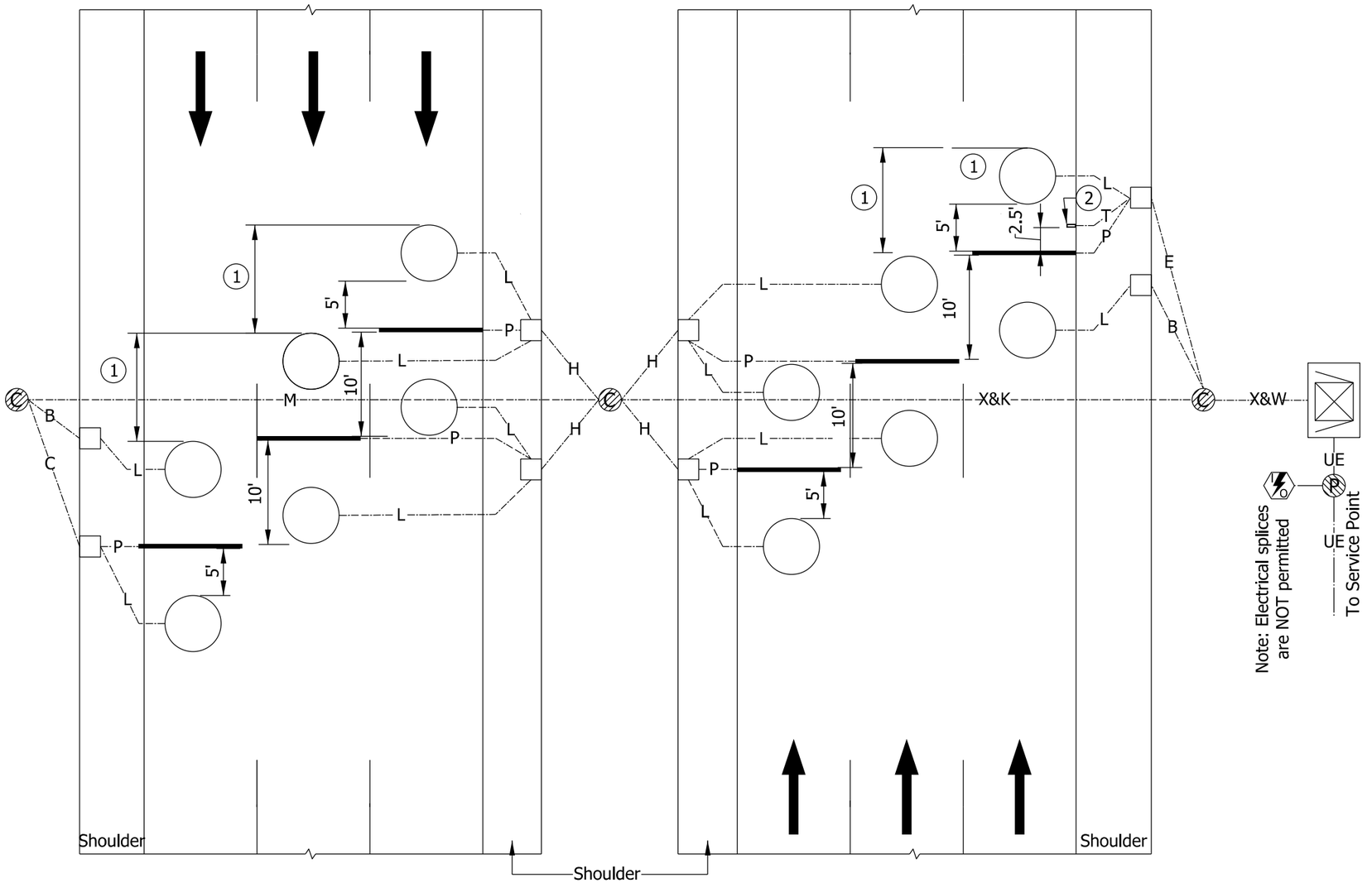

NOTES:

1. The offset of piezo sensors from one lane to the next shall be 11.5 ft or as directed by the Engineer.
2. Temperature sensor

CONDUIT KEY:

– — –B– — –	2 in. Conduit with 1 Loop Lead
– — –C– — –	2 in. Conduit with 1 Loop Lead and 1 Piezo Lead
– — –E– — –	2 in. Conduit with 1 Loop Lead, 1 Piezo Lead, and 1 Temperature Lead
– — –H– — –	2 in. Conduit with 2 Loop Leads and 1 Piezo Lead
– — –K– — –	2 in. Conduit with 4 Loop Leads, 2 Piezo Leads, and 1 Pull Line
– — –L– — –	Loop Lead
– — –M– — –	3 in. Conduit with 2 Loop Leads, 1 Piezo Lead, and 1 Pull Line
– — –T– — –	Temperature Sensor Lead
– — –UE– — –	Electric Conduit 120 / 240 VAC
– — –W– — –	3 in. Conduit with 6 Loop Leads, 3 Piezo Leads, 1 Temperature Lead, and 1 Pull Line
– — –X– — –	3 in. Conduit with 6 Loop Leads, 3 Piezo Leads, and 1 Pull Line

LEGEND

- Temperature Sensor
- Detector Housing
- Class-1 Piezoelectric Sensor (11' in Length)
- Round Inductive Loop (6' Diameter)
- Communications Handhole
- Power Handhole (120/240VAC)
- Cabinet and Concrete Base
- Direction of Traffic Arrow
- Remote Disconnect

INDIANA DEPARTMENT OF TRANSPORTATION

SIX LANE AUTOMATIC TRAFFIC RECORDER (ATR) STATIONS

SEPTEMBER 2023

STANDARD DRAWING NO. E 809-ITCS-04

DAVID H. BORUFF REGISTERED No. 60900348 STATE OF INDIANA PROFESSIONAL ENGINEER

DESIGN STANDARDS ENGINEER — DATE 05/04/23

CHIEF ENGINEER — DATE 05/12/2023

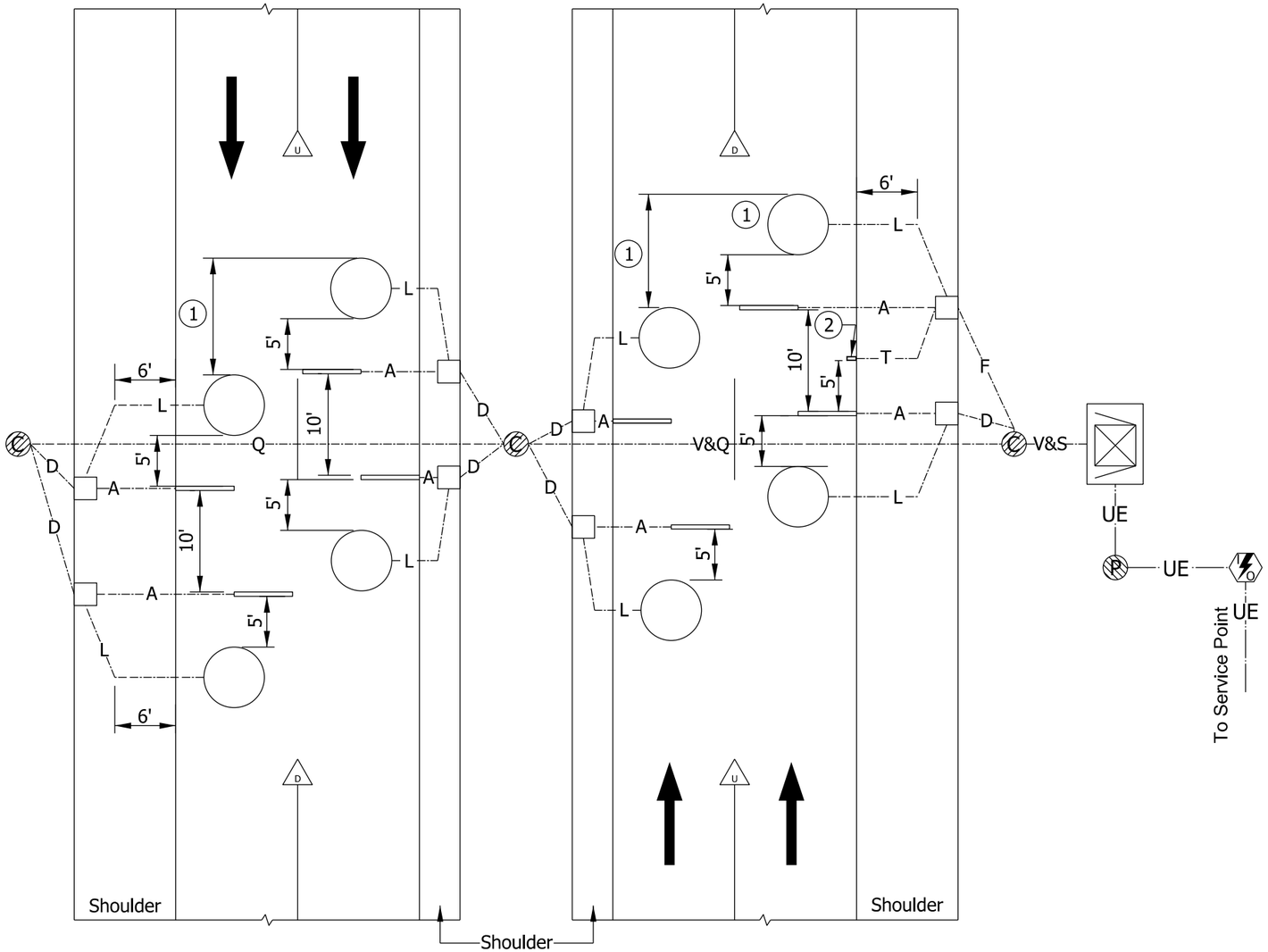

NOTES:

1. The offset of axle sensors from one lane to the next shall be 11.5 ft or as directed by the Engineer.
2. Temperature sensor

CONDUIT KEY:

- A — Axle Sensor Lead
- D — 2 in. Conduit with 1 Loop Lead and 1 Axle Lead
- F — 2 in. Conduit with 1 Loop Lead, 1 Axle Lead, and 1 Temperature Lead
- L — Loop Lead
- Q — 3 in. Conduit with 2 Loop Leads, 2 Axle Leads, and 1 Pull Line
- S — 3 in. Conduit with 4 Loop Leads, 4 Axle Leads, 1 Temperature Lead, and 1 Pull Line
- T — Temperature Sensor Lead
- UE — Electric Conduit 120 / 240 VAC
- V — 3 in. Conduit with 4 Loop Leads, 4 Axle Leads, and 1 Pull Line

LEGEND

- Temperature Sensor
- Detector Housing
- Round Inductive Loop (6' Diameter)
- Communications Handhole
- Power Handhole (120/240VAC)
- Axle Weight Sensor (5.74' in length)
- Direction of Traffic Arrow
- Upstream Pavement Conditions: See General Notes
- Downstream Pavement Conditions: See General Notes
- Remote Disconnect
- Cabinet and Concrete Base

INDIANA DEPARTMENT OF TRANSPORTATION

FOUR LANE WEIGH-IN-MOTION (WIM) STATIONS

SEPTEMBER 2023

STANDARD DRAWING NO. E 809-ITCS-05

DAVID H. BORUFF REGISTERED No. 60900348 STATE OF INDIANA PROFESSIONAL ENGINEER

05/04/23
DESIGN STANDARDS ENGINEER — DATE

05/12/2023
CHIEF ENGINEER — DATE

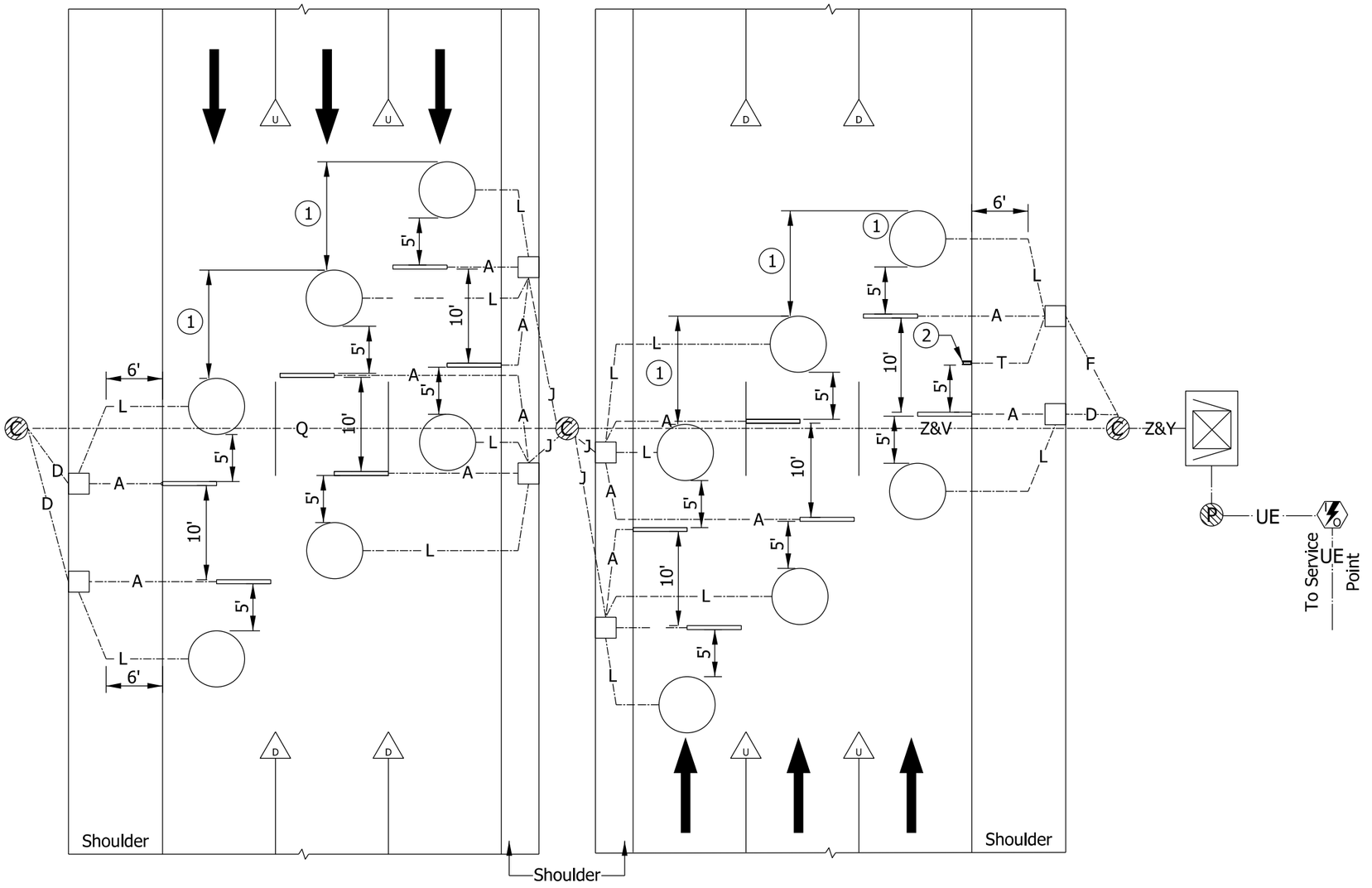

NOTES:

1. The offset of axle sensors from one lane to the next shall be 11.5 ft or as directed by the Engineer.
2. Temperature sensor

CONDUIT KEY:

- A — Axle Sensor Lead
- D — 2 in. Conduit with 1 Loop Lead and 1 Axle Lead
- F — 2 in. Conduit with 1 Loop Lead, 1 Axle Lead, and 1 Temperature Lead
- J — 2 in. Conduit with 2 Loop Leads and 2 Axle Leads
- L — Loop Lead
- Q — 3 in. Conduit with 2 Loop Leads, 2 Axle Leads, and 1 Pull Line
- T — Temperature Sensor Lead
- UE — Electric Conduit 120 / 240 VAC
- V — 3 in. Conduit with 4 Loop Leads, 4 Axle Leads, and 1 Pull Line
- Y — 3 in. Conduit with 6 Loop Leads, 6 Axle Leads 1 Temperature Lead, and 1 Pull Line
- Z — 3 in. Conduit with 6 Loop Leads, 6 Axle Leads and 1 Pull Line

LEGEND

- Temperature Sensor
- Detector Housing
- Round Inductive Loop (6' Diameter)
- Communications Handhole
- Power Handhole (120/240VAC)
- Axle Weight Sensor (5.74' in length)
- Direction of Traffic Arrow
- Upstream Pavement Conditions: See General Notes
- Downstream Pavement Conditions: See General Notes
- Remote Disconnect
- Cabinet and Concrete Base

INDIANA DEPARTMENT OF TRANSPORTATION

SIX LANE WEIGH-IN-MOTION (WIM) STATIONS

SEPTEMBER 2023

STANDARD DRAWING NO. E 809-ITCS-06

DAVID H. BORUFF REGISTERED No. 60900348 STATE OF INDIANA PROFESSIONAL ENGINEER

DESIGN STANDARDS ENGINEER — DATE 05/04/23

CHIEF ENGINEER — DATE 05/12/2023

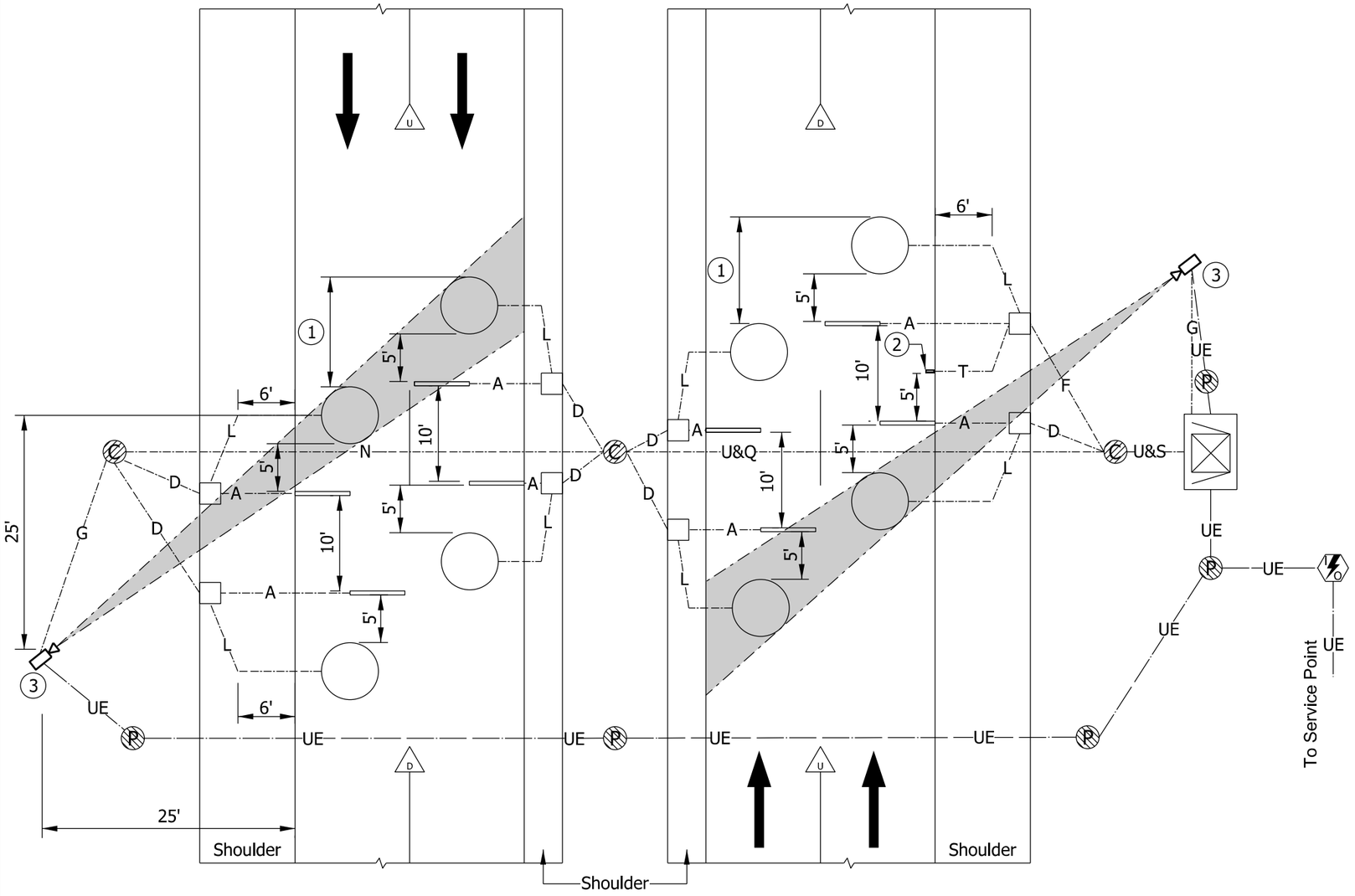

NOTES:

1. The offset of the axle sensors from one lane to the next shall be 11.5 ft or as directed by the Engineer.
2. Temperature sensor
3. Cameras shall be aligned with the leading edge of all upstream loops in a travel direction.

CONDUIT KEY:

– – –A– – –	Axle Sensor Lead
– – –D– – –	2 in. Conduit with 1 Loop Lead and 1 Axle Lead
– – –F– – –	2 in. Conduit with 1 Loop Lead, 1 Axle Lead, and 1 Temperature Lead
– – –G– – –	2 in. Conduit with 2 Cat6a Camera Leads and 1 Pull Line
– – –L– – –	Loop Lead
– – –N– – –	3 in. Conduit with 2 Loop Leads, 2 Axle Leads, 2 Cat6a Camera Leads, and 1 Pull Line
– – –Q– – –	3 in. Conduit with 2 Loop Leads, 2 Axle Leads, and 1 Pull Line
– – –S– – –	3 in. Conduit with 4 Loop Leads, 4 Axle Leads, 1 Temperature Lead, and 1 Pull Line
– – –T– – –	Temperature Sensor Lead
– – –UE– – –	Electric Conduit 120 / 240 VAC
– – –U– – –	3 in. Conduit with 4 Loop Leads, 4 Axle Leads, 2 Cat6a Camera Leads, and 1 Pull Line
– · – · – · –	Camera Line of Sight

LEGEND

- Temperature Sensor
- Detector Housing
- Round Inductive Loop (6' Diameter)
- Communications Handhole
- Power Handhole (120/240VAC)
- Axle Weight Sensor (5.74' in length)
- Pole-mounted side view camera with IR illuminators
- Upstream Pavement Conditions: See General Notes
- Downstream Pavement Conditions: See General Notes
- Remote Disconnect
- Direction of Traffic Arrow
- Cabinet and Concrete Base

INDIANA DEPARTMENT OF TRANSPORTATION

FOUR LANE VIRTUAL WEIGH-IN-MOTION (VWIM) STATIONS

SEPTEMBER 2023

STANDARD DRAWING NO. E 809-ITCS-07

DAVID H. BORUFF REGISTERED No. 60900348 STATE OF INDIANA PROFESSIONAL ENGINEER

05/04/23
DESIGN STANDARDS ENGINEER DATE

05/12/2023
CHIEF ENGINEER DATE

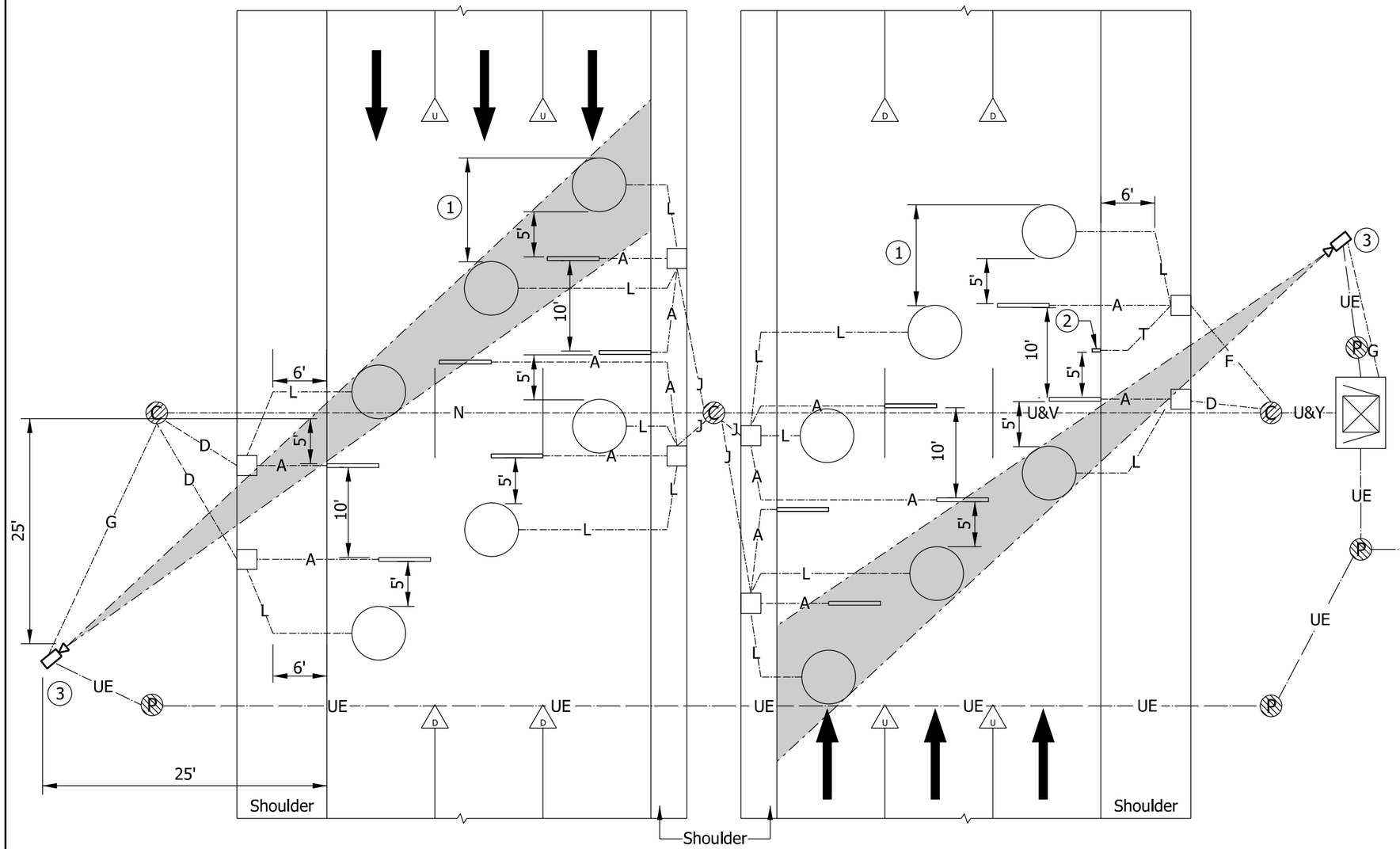

NOTES:

1. The offset of the axle sensors from one lane to the next shall be 11.5 ft or as directed by the Engineer.
2. Temperature sensor
3. Cameras shall be aligned with the leading edge of all upstream loops in a travel direction.

CONDUIT KEY:

A	Axle Sensor Lead
D	2 in. Conduit with 1 Loop Lead and 1 Axle Lead
F	2 in. Conduit with 1 Loop Lead, 1 Axle Lead, and 1 Temperature Lead
G	2 in. Conduit with 2 Cat6a Camera Leads and 1 Pull Line
J	2 in. Conduit with 2 Loop Leads and 2 Axle Leads
L	Loop Lead
N	3 in. Conduit with 2 Loop Leads, 2 Axle Leads, 2 Cat6a Camera Leads, and 1 Pull Line
T	Temperature Sensor Lead
UE	Electric Conduit 120 / 240 VAC
U	3 in. Conduit with 6 Loop Leads, 6 Axle Leads, 2 Cat6a Camera Leads, and 1 Pull Line
V	3 in. Conduit with 4 Loop Leads, 4 Axle Leads, and 1 Pull Line
Y	3 in. Conduit with 6 Loop Leads, 6 Axle Leads, 1 Temperature Lead, and 1 Pull Line
	Camera Line of Sight

To Service Point

LEGEND

- Temperature Sensor
- Detector Housing
- Round Inductive Loop (6' Diameter)
- Communications Handhole
- Power Handhole (120/240VAC)
- Axle Weight Sensor (5.74' in length)
- Pole-mounted side view camera with IR illuminators
- Upstream Pavement Conditions: See General Notes
- Downstream Pavement Conditions: See General Notes
- Remote Disconnect
- Direction of Traffic Arrow
- Cabinet and Concrete Base

INDIANA DEPARTMENT OF TRANSPORTATION

SIX LANE VIRTUAL WEIGH-IN-MOTION (VWIM) STATIONS

SEPTEMBER 2023

STANDARD DRAWING NO. E 809-ITCS-08

DAVID H. BORUFF REGISTERED No. 60900348 STATE OF INDIANA PROFESSIONAL ENGINEER

05/04/23
DESIGN STANDARDS ENGINEER DATE

05/12/2023
CHIEF ENGINEER DATE

CABINET EXTERIOR

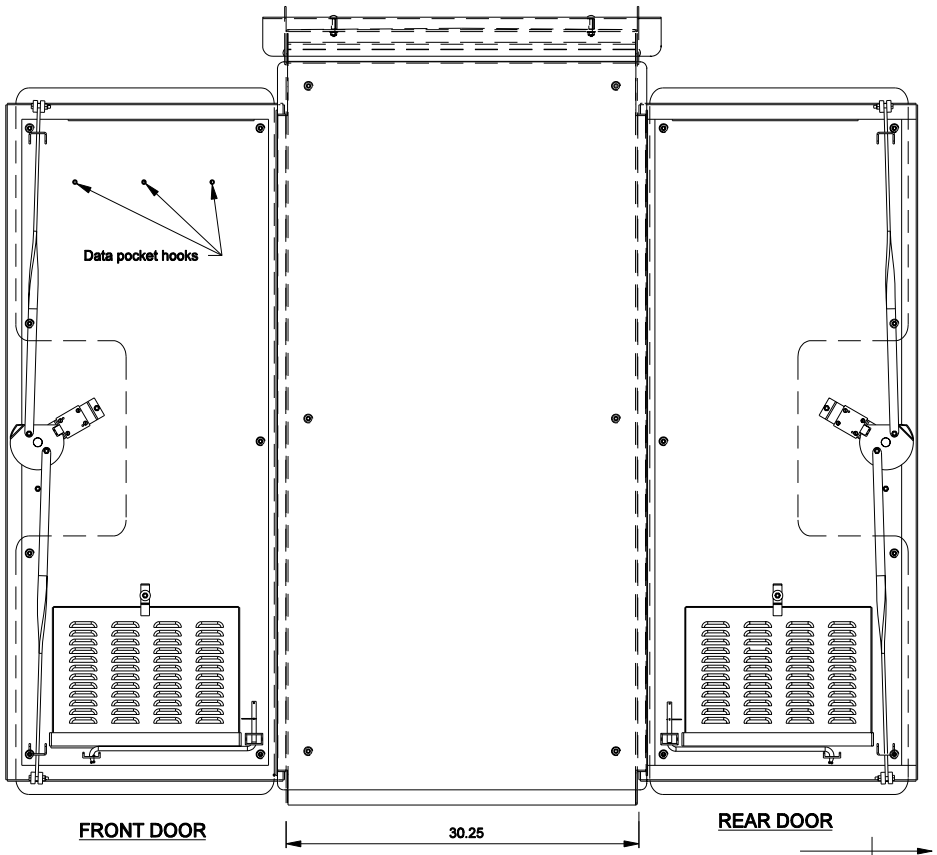

SIDE VIEW

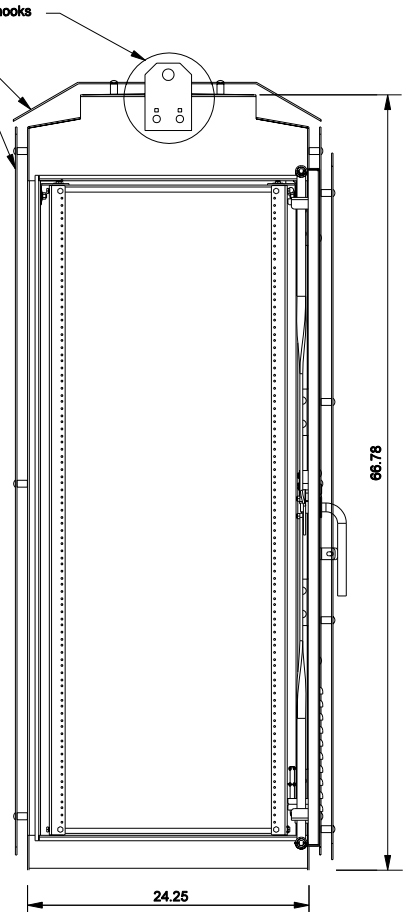

REAR VIEW
WITH DOOR OPEN

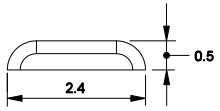

DEPTH = 1/8 "

DOOR FILTER
LOUVRE DETAIL

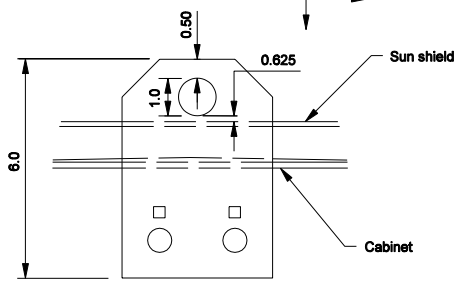

DETAIL A
NTS

NOTES:

1. See Standard Drawings E 809-ITCS-01A thru -07 for additional ITS cabinet details.

All dimensions are in inches

INDIANA DEPARTMENT OF TRANSPORTATION

INDOT ITS CABINET DETAIL

MARCH 2006

STANDARD DRAWING NO. E 809-ITSC-01

RICHARD L. VanCLEAVE REGISTERED No. 9750 STATE OF INDIANA PROFESSIONAL ENGINEER

DESIGN STANDARDS ENGINEER

/s/ Richard L. VanCleave 3-01-06
DESIGN STANDARDS ENGINEER DATE

/s/ Richard K. Smutzer 3-01-06
CHIEF HIGHWAY ENGINEER DATE

NOTES:

1. See Standard Drawings E 809-ITCS-01 or 02 thru -07 for additional ITS cabinet details.

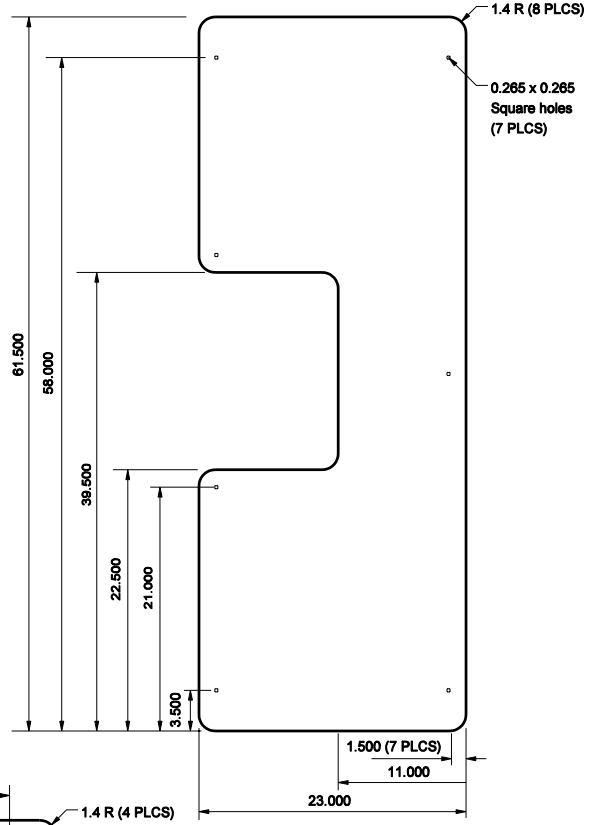

SUN SHIELD DOOR

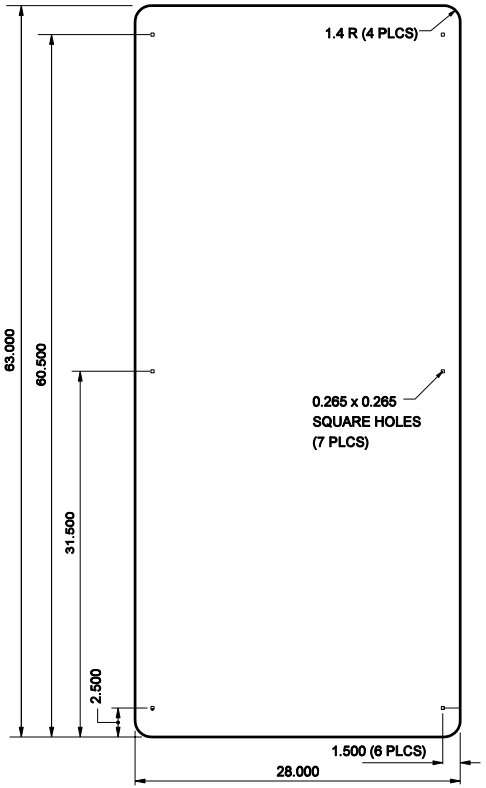

SUN SHIELD SIDE

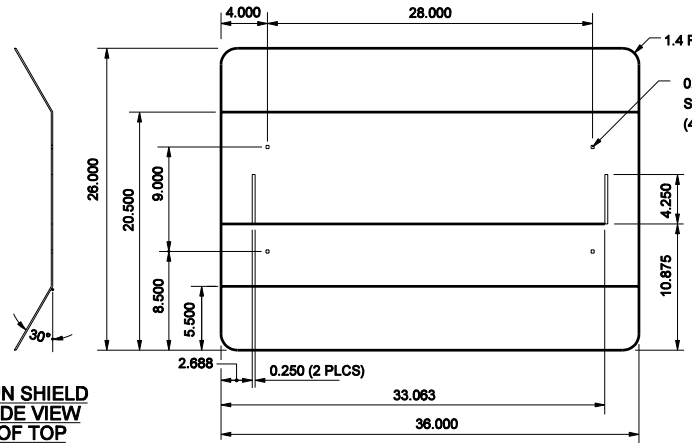

SUN SHIELD TOP VIEW

SUN SHIELD SIDE VIEW OF TOP

Sun Shield Notes:

1. Corner cuts are 45-degree cuts, 1/2 " back
2. All sun shield shall use a 1" spacer

All dimensions are in inches

INDIANA DEPARTMENT OF TRANSPORTATION

INDOT ITS CABINET DETAIL

MARCH 2006

STANDARD DRAWING NO. E 809-ITSC-01A

RICHARD L. VanCLEAVE REGISTERED No. 9750 STATE OF INDIANA PROFESSIONAL ENGINEER

DESIGN STANDARDS ENGINEER

/s/ Richard L. VanCleave 3-01-06
DESIGN STANDARDS ENGINEER DATE

/s/ Richard K. Smutzer 3-01-06
CHIEF HIGHWAY ENGINEER DATE

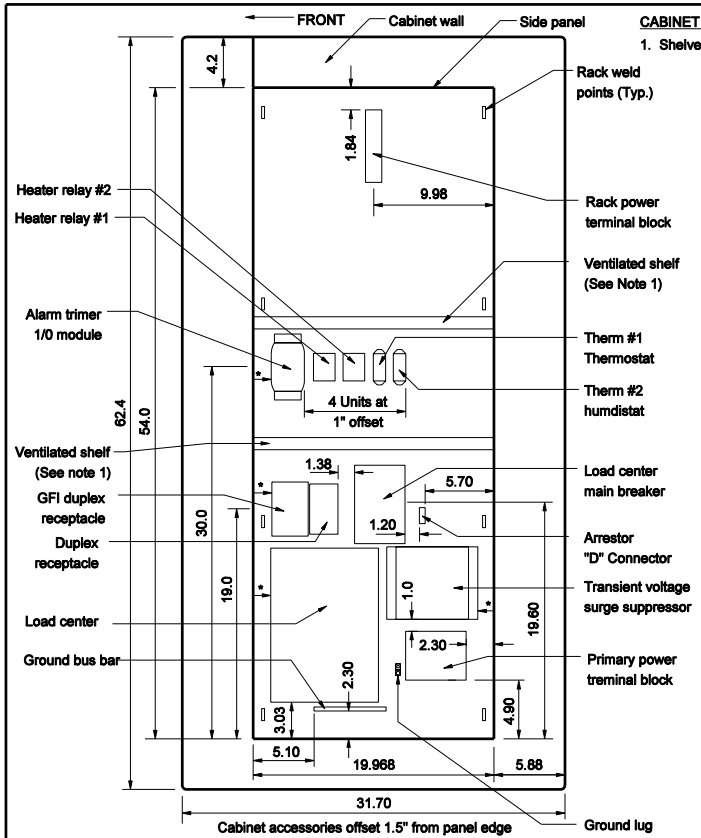

CABINET SIDE PANEL
POWER DISTRIBUTION

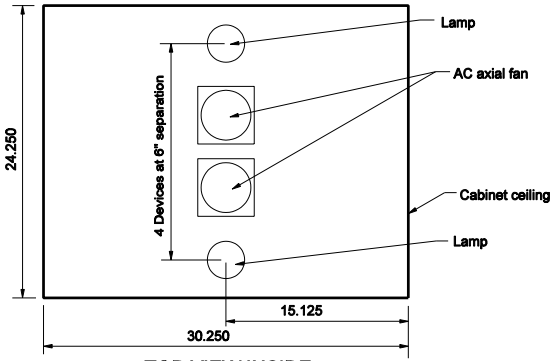

TOP VIEW INSIDE

CABINET PANEL NOTES:

1. Shelves shall be capable of being relocated.

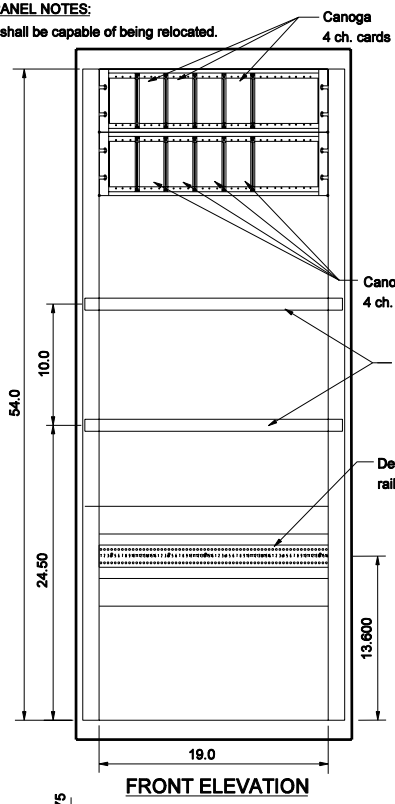

FRONT ELEVATION

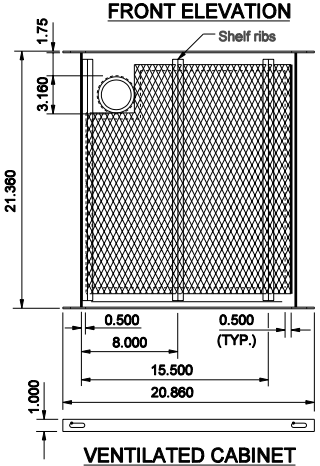

VENTILATED CABINET
SHELF BOTTOM VIEW

VENTILATED SHELF NOTES:

1. Tack weld screen to bottom of shelf.
2. Tack weld ribs over screen to bottom of shelf in locations shown.
3. Press bushing in from top of shelf.
4. Material Notes:
   Shelf frame-0.125 alum.
   screen-0.125 expanded alum.w/0.5" mesh
   ribs - 0.125 x 0.625 x 0.625 alum. angle

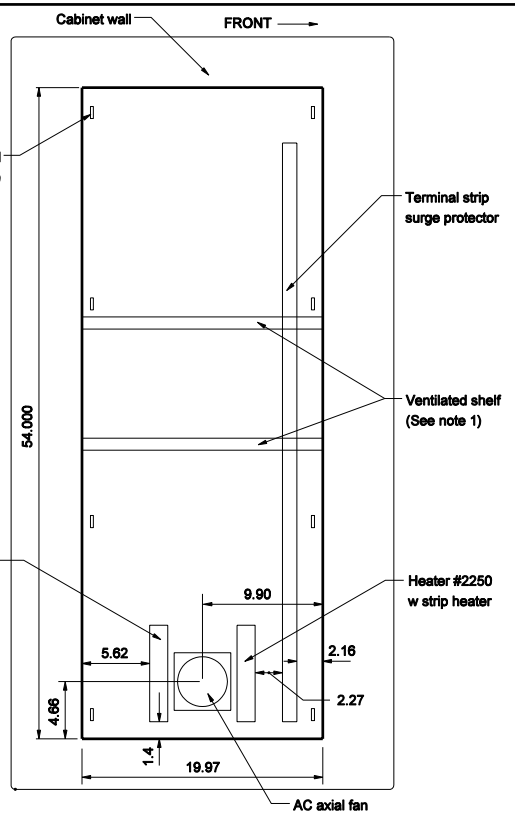

CABINET SIDE PANEL
HEATER

NOTES:

1. See Standard Drawings E 809-ITCS-01, -01A or -03 thru -07 for additional ITS cabinet details.

All dimensions are in inches

INDIANA DEPARTMENT OF TRANSPORTATION

INDOT ITS CABINET SCHEMATIC

MARCH 2006

STANDARD DRAWING NO. E 809-ITSC-02

RICHARD L. VanCLEAVE REGISTERED No. 9750 STATE OF INDIANA PROFESSIONAL ENGINEER

DESIGN STANDARDS ENGINEER

/s/ Richard L. VanCleave 3-01-06
DESIGN STANDARDS ENGINEER DATE

/s/ Richard K. Smutzer 3-01-06
CHIEF HIGHWAY ENGINEER DATE

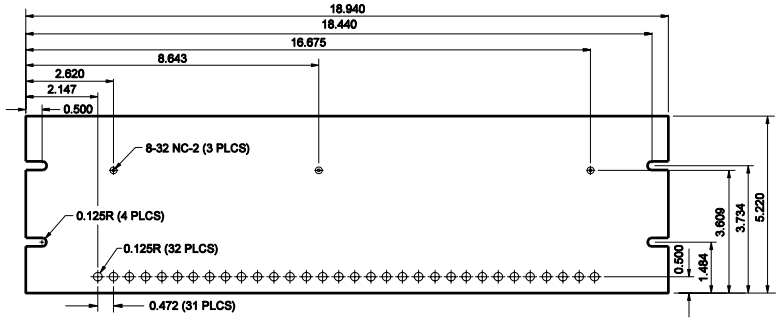

DETECTOR CARD DIN RAIL DETAIL

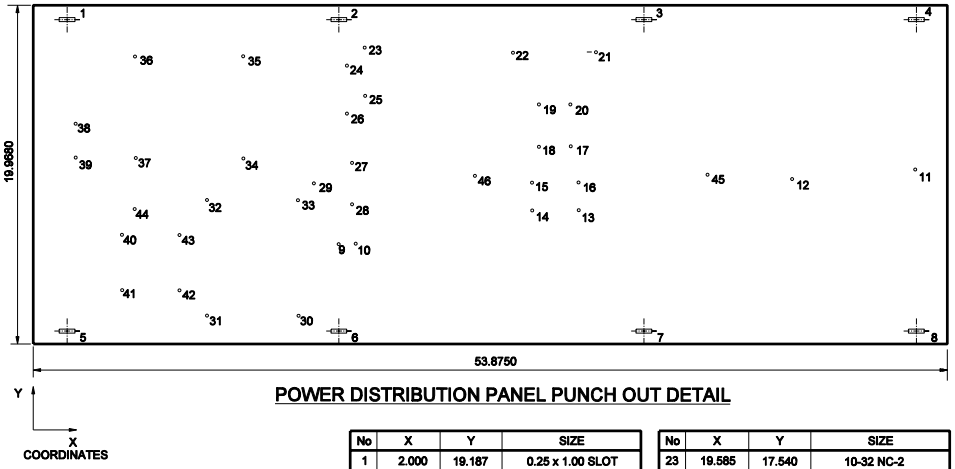

POWER DISTRIBUTION PANEL PUNCH OUT DETAIL

No	X	Y	SIZE
1	2.000	19.187	0.25 x 1.00 SLOT
2	18.000		
3	36.000		
4	52.000	19.187	
5	2.000	0.781	
6	18.000		
7	36.000		
8	52.000	0.781	0.25 x 1.00 SLOT
9	18.000	6.000	0.125 DIA
10	19.000	6.000	0.125 DIA
11	52.000	10.234	8-32 NC-2
12	44.688	9.734	
13	32.180	7.950	
14	29.430	7.950	
15	29.430	9.600	
16	32.180	9.600	
17	31.740	11.708	
18	29.870	11.708	
19	29.870	14.175	
20	31.740	14.175	
21	33.250	17.234	
22	28.375	17.234	8-32 NC-2

No	X	Y	SIZE
23	19.585	17.540	10-32 NC-2
24	18.522	16.478	
25	19.585	14.728	
26	18.522	13.665	
27	18.803	10.736	
28	18.803	8.336	
29	16.553	9.536	
30	15.608	1.750	
31	10.250	1.750	
32	10.250	8.550	
33	15.608	8.550	
34	12.428	11.000	
35	12.428	17.000	
36	6.053	17.000	
37	6.053	11.000	
38	2.500	13.000	
39	2.500	11.000	
40	5.250	6.500	
41	5.250	3.250	
42	8.625	3.250	
43	8.625	6.500	
44	6.000	8.000	10-32 NC-2
45	39.750	10.000	8-32 NC-2
46	26.00	10.000	8-32 NC-2

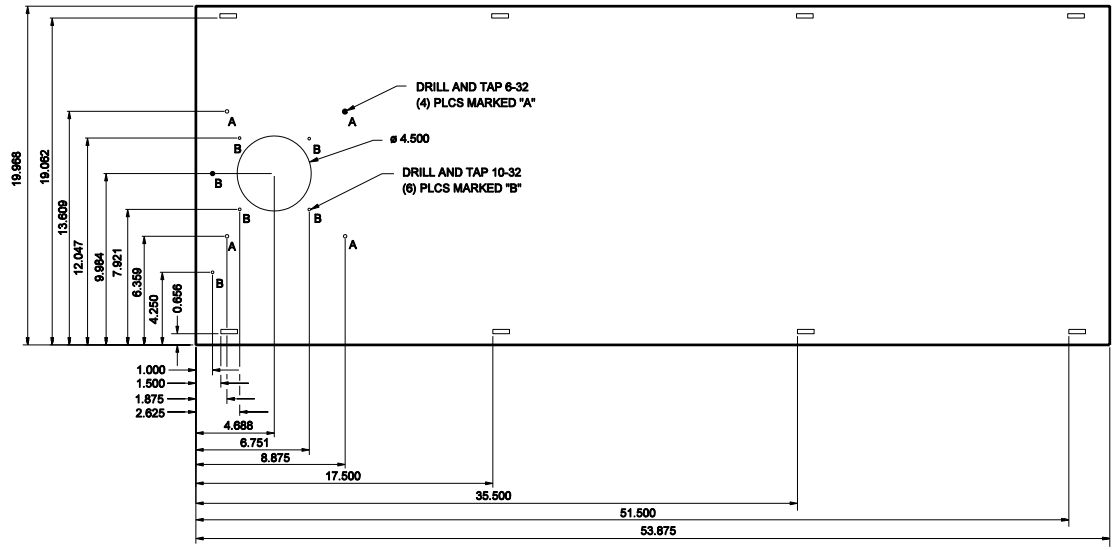

HEATER PANEL PUNCH OUT DETAILS

NOTES:

1. See Standard Drawings E 809-ITCS-01 thru -02 or -03 thru -07 for additional ITS cabinet details.

All dimensions are in inches

INDIANA DEPARTMENT OF TRANSPORTATION

CABINET PUNCH OUT DETAILS

MARCH 2006

STANDARD DRAWING NO. E 809-ITSC-03

RICHARD L. VanCLEAVE REGISTERED No. 9750 STATE OF INDIANA PROFESSIONAL ENGINEER

DESIGN STANDARDS ENGINEER

/s/ Richard L. VanCleave 3-01-06
DESIGN STANDARDS ENGINEER DATE

/s/ Richard K. Smutzer 3-01-06
CHIEF HIGHWAY ENGINEER DATE

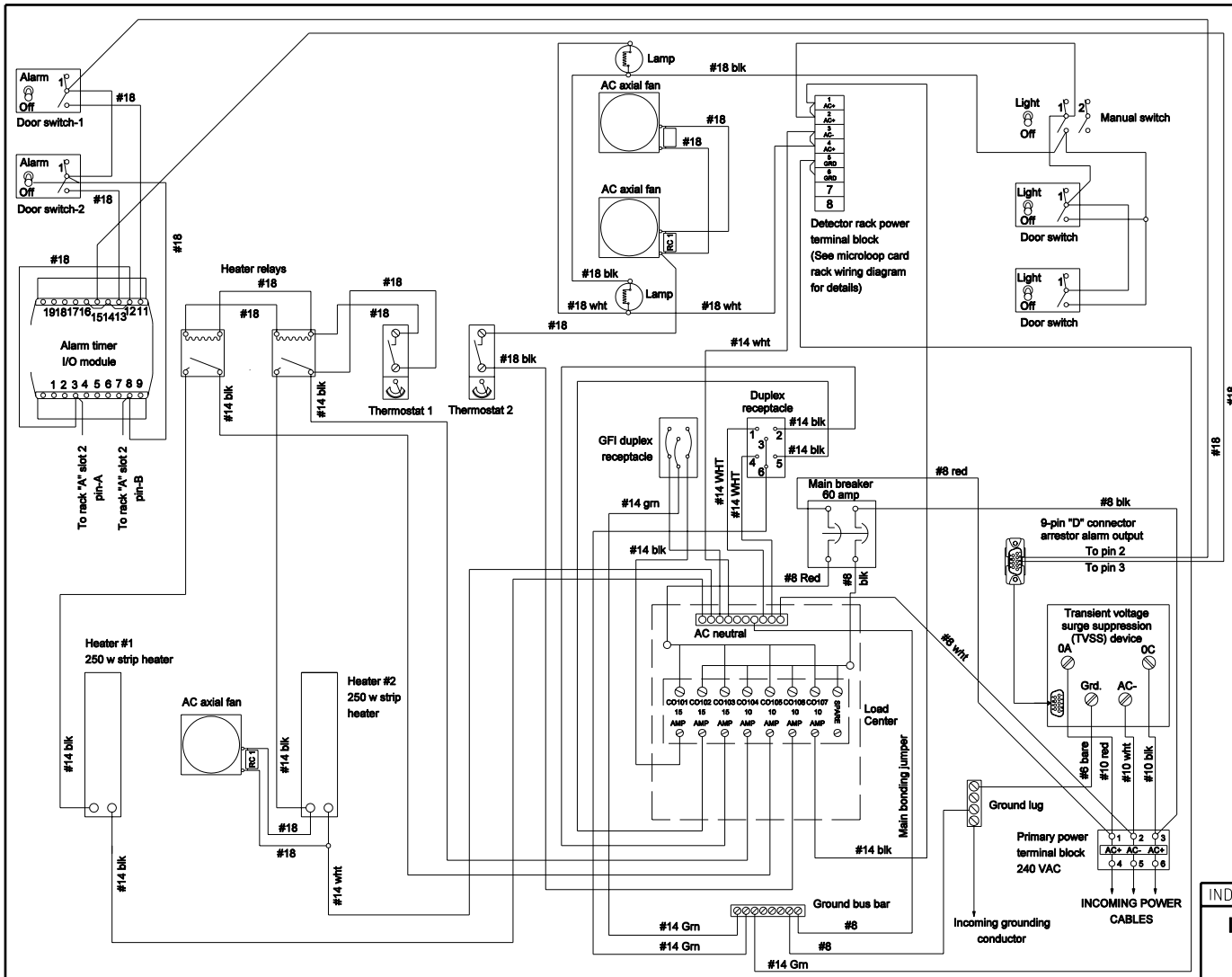

NOTES:

1. See Standard Drawings E 809-ITCS-01 thru -03 or -05 thru -07 for additional ITS cabinet details.
2. Minimum wire diameter indicated on connections between components.

INDIANA DEPARTMENT OF TRANSPORTATION

INDOT ITS CABINET SCHEMATIC

MARCH 2006

STANDARD DRAWING NO. E 809-ITSC-04

RICHARD L. VanCLEAVE REGISTERED No. 9750 STATE OF INDIANA PROFESSIONAL ENGINEER

DESIGN STANDARDS ENGINEER

/s/ Richard L. VanCleave 3-01-06
DESIGN STANDARDS ENGINEER DATE

/s/ Richard K. Smutzer 3-01-06
CHIEF HIGHWAY ENGINEER DATE

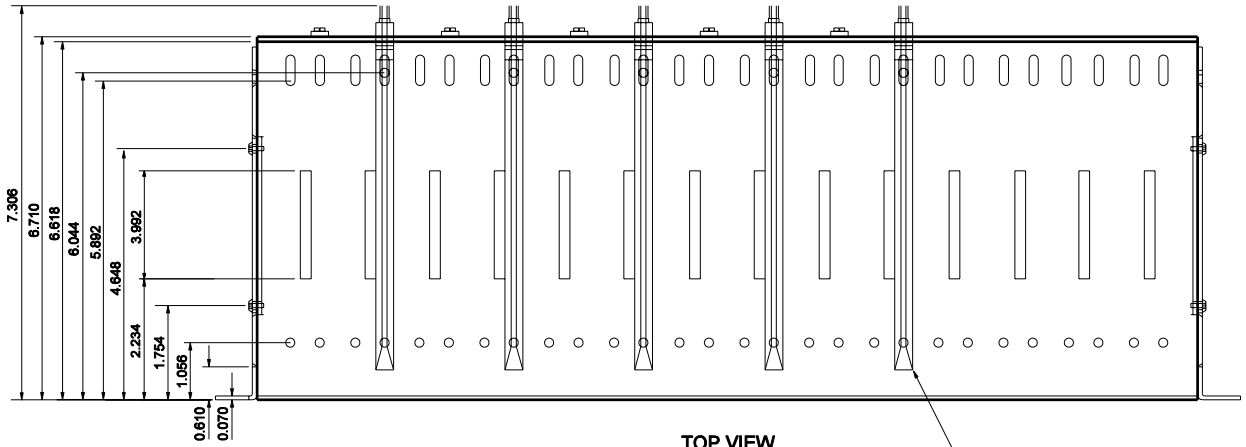

TOP VIEW

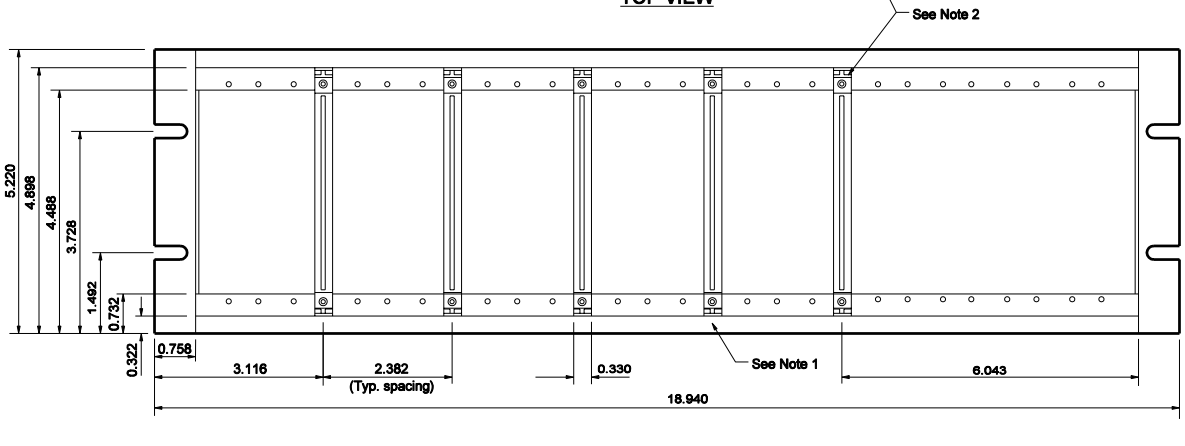

FRONT VIEW

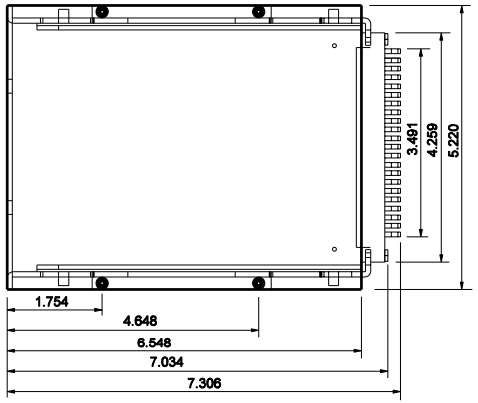

SIDE VIEW

NOTES:

1. Apply marker tape to front lip of input file chassis, top and bottom.
2. Card guides must line up with edge card connectors.
3. No card guide keys are to be installed in this assembly.
4. Depth does not include wiring.
5. See Standard Drawings E 809-ITCS-01 thru -04 or -06 thru -07 for additional ITS cabinet details.

All dimensions are in inches

INDIANA DEPARTMENT OF TRANSPORTATION

DETECTOR CARD RACK DETAIL

MARCH 2006

STANDARD DRAWING NO. E 809-ITSC-05

RICHARD L. VanCLEAVE REGISTERED No. 9750 STATE OF INDIANA PROFESSIONAL ENGINEER

DESIGN STANDARDS ENGINEER

/s/ Richard L. VanCleave 3-01-06
DESIGN STANDARDS ENGINEER DATE

/s/ Richard K. Smutzer 3-01-06
CHIEF HIGHWAY ENGINEER DATE

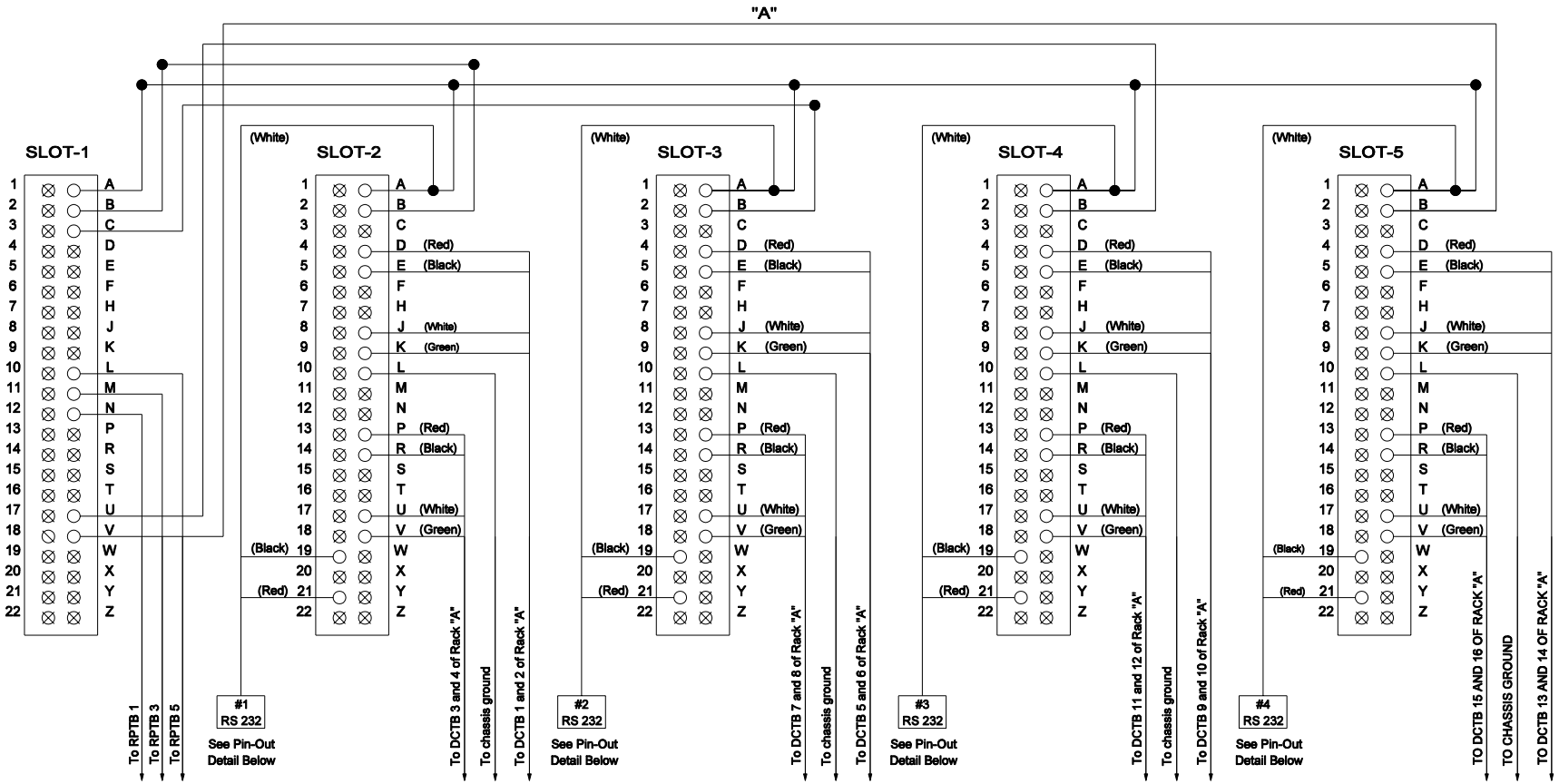

PINS ON BACK OF CARD RACKGROUP "A" SHOWN. 4-SLOT RACK GROUPS "B", "C", "D" NOT SHOWN.

NOTES:

1. See Standard Drawings E 809-ITCS-01 thru-05 or -06A and -07 for additional ITS cabinet details.

INDIANA DEPARTMENT OF TRANSPORTATION

INDOT ITS CABINET MICROLOOP CARD RACK WIRING DIAGRAM

MARCH 2006

STANDARD DRAWING NO. E 809-ITSC-06

RICHARD L. VanCLEAVE REGISTERED No. 9750 STATE OF INDIANA PROFESSIONAL ENGINEER

DESIGN STANDARDS ENGINEER

/s/ Richard L. VanCleave 3-01-06
DESIGN STANDARDS ENGINEER DATE

/s/ Richard K. Smutzer 3-01-06
CHIEF HIGHWAY ENGINEER DATE

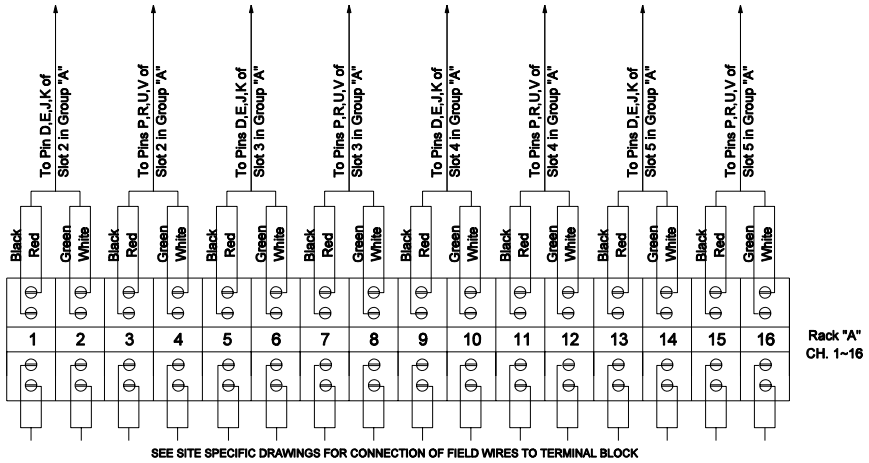

SEE SITE SPECIFIC DRAWINGS FOR CONNECTION OF FIELD WIRES TO TERMINAL BLOCK

DETECTOR CARD DIN RAIL
TERMINAL BLOCKS (DCTB)

(16-BLOCK DIN RAIL GROUPS "B", "C", "D" NOT SHOWN)

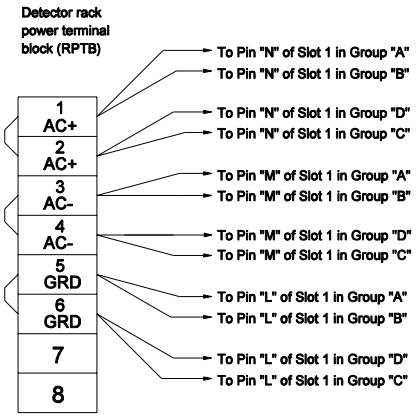

NOTES:

1. Cables from rack to field terminal block shall be two pair twisted with a sheild on each pair.
2. Field terminal blocks shall be Entrelec #0115-271.22
3. Cables from rack to field terminal blocks shall be 10' in length with extra coiled P on end of rack.
4. Slot 1 for rack power module. Slots 2 through 5 are for canoga channel cards.
5. See Standard Drawings E 809-ITSC-01 thur -06 or -07 for additional ITS cabinet details.

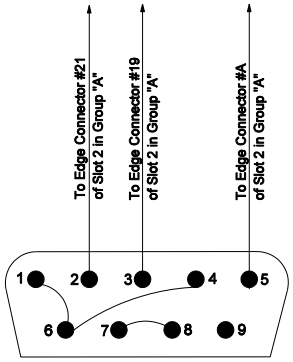

#1 RS232

PIN-OUT DETAIL

INDIANA DEPARTMENT OF TRANSPORTATION

INDOT ITS CABINET MICROLOOP CARD RACK WIRING DIAGRAM

MARCH 2006

STANDARD DRAWING NO. E 809-ITSC-06A

RICHARD L. VanCLEAVE REGISTERED No. 9750 STATE OF INDIANA PROFESSIONAL ENGINEER

DESIGN STANDARDS ENGINEER

/s/ Richard L. VanCleave — 3-01-06
DESIGN STANDARDS ENGINEER — DATE

/s/ Richard K. Smutzer — 3-01-06
CHIEF HIGHWAY ENGINEER — DATE

CABINET LIGHT
ON
○
OFF

RACK A	RACK B	RACK C	RACK D

Above tags are one each for a total of 4 tags.
RACK A, RACK B, RACK C, and RACK D

GFI RECEPTACLE	EQUIPMENT #1 RECEPTACLE #2

MAIN BREAKER

GFI	RECEP #1	RECEP #2	HEATER #1	HEATER #2	CABINET FANS	DETECTOR RACKS	SPARE

SURGE SUPPRESSOR

HEATER #2	HEATER #1

HEATER 1 and HEATER 2 are 1 tag Each.

HEATER RELAY #2	HEATER RELAY #1	HEATING THERMO STAT	COOLING FAN THERMO STAT

RACK A	RACK B	RACK C	RACK D

ALARM I/O MODULE

NOTES:

1. See Standard Drawings E 809-ITCS-01 thru -06A for additional ITS cabinet details.

INDIANA DEPARTMENT OF TRANSPORTATION

ENGRAVED TAG DETAIL

MARCH 2006

STANDARD DRAWING NO. E 809-ITSC-07

RICHARD L. VanCLEAVE REGISTERED No. 9750 STATE OF INDIANA PROFESSIONAL ENGINEER

DESIGN STANDARDS ENGINEER

/s/ Richard L. VanCleave 3-01-06
DESIGN STANDARDS ENGINEER DATE

/s/ Richard K. Smutzer 3-01-06
CHIEF HIGHWAY ENGINEER DATE